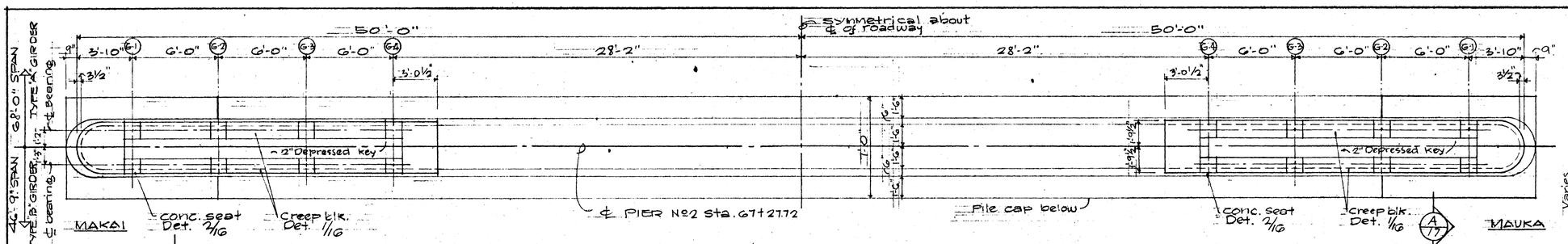

PLAN OF PIER No 2

SCALE: 1/4" = 1'-0"

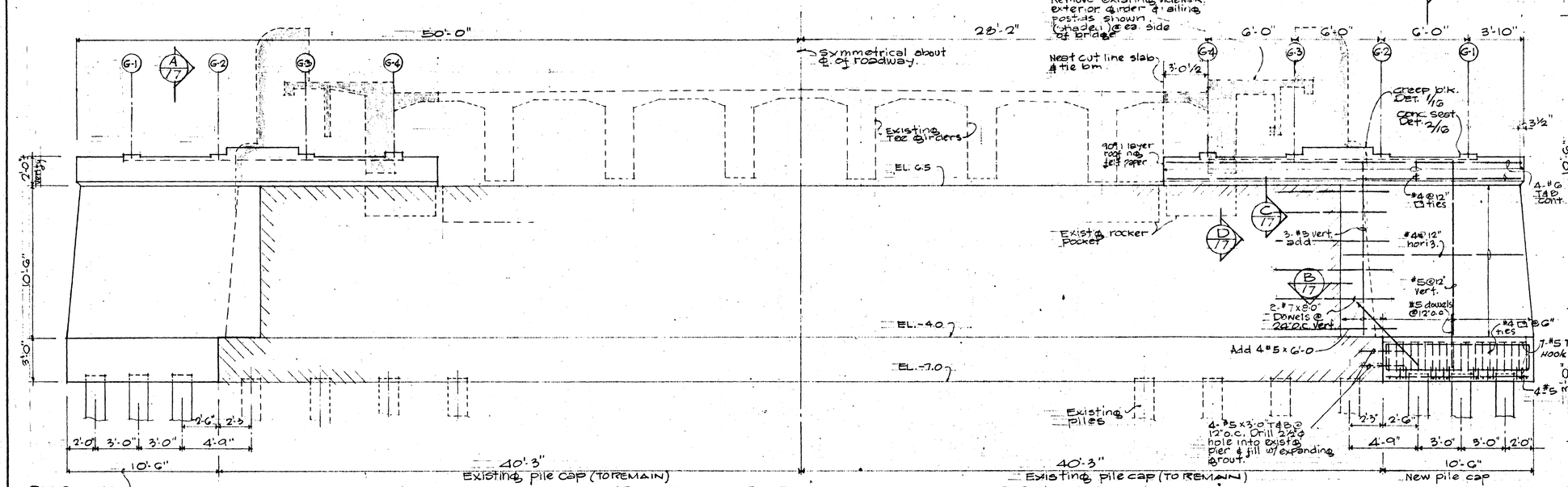

ELEVATION OF PIER No 2

SCALE: 1/4" = 1'-0"

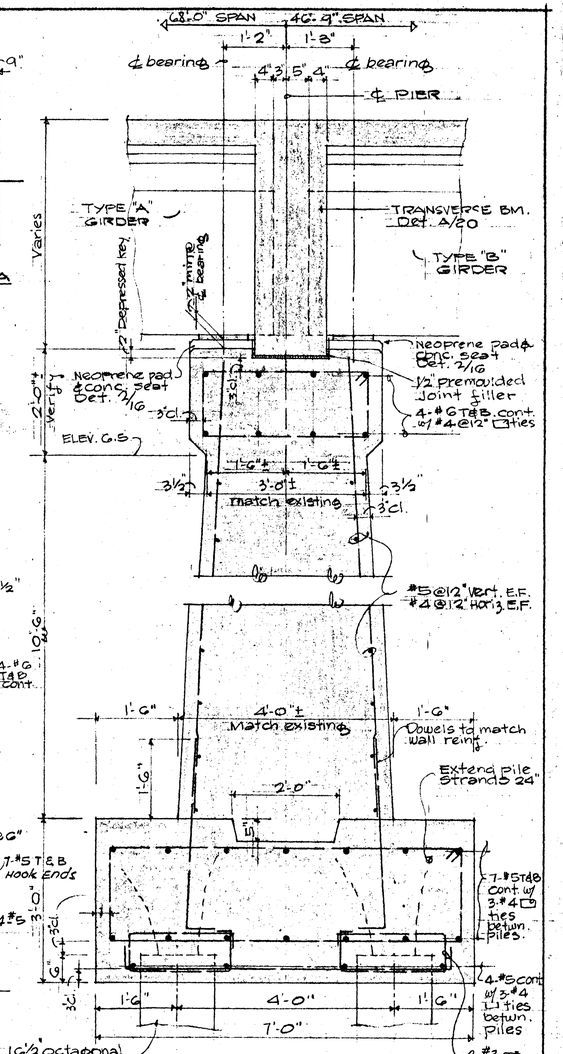

SECTION A/17

Scale: 3/4" = 1'-0"

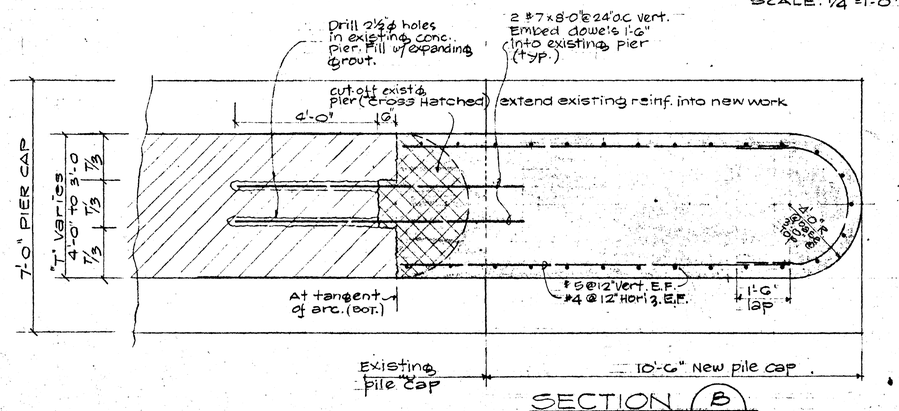

SECTION B/17

SCALE: 1/2" = 1'-0"

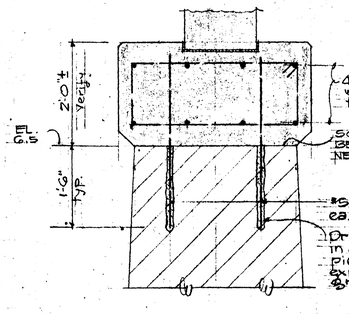

SECTION C/17

SCALE: 3/4" = 1'-0"

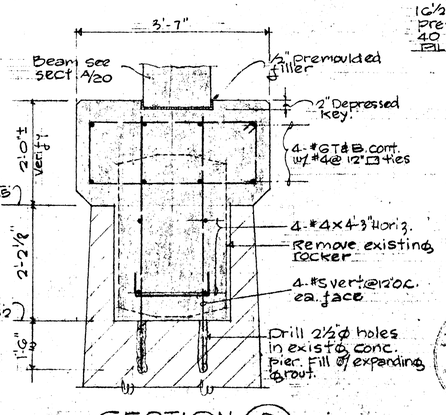

SECTION D/17

SCALE: 3/4" = 1'-0"

THIS WORK WAS PREPARED BY ME OR UNDER MY SUPERVISION

Signature

JOB NO. 35-68R

DEPARTMENT OF PUBLIC WORKS
CITY AND COUNTY OF HONOLULU
DIVISION OF ENGINEERING

PIER No 2 DETAILS

WIDENING OF ALA MOANA BRIDGE
OVER ALA WAI CANAL
HONOLULU, OAHU, HAWAII

ENGINEER K.D.P	DATE 4/26/68
DRAFTSMAN B.L.	CHECKED D.K.
SCALE AS SHOWN	TRACER
APPROVED:	APPROVED: 10-10-68
CHIEF ENGINEER DPW	DIRECTOR DIV. OF ENG.