FED. ROAD DIST. NO.	STATE	FED. AID PROJ. NO.	FISCAL YEAR	SHEET NO.	TOTAL SHEETS
HAWAII	HAW.	STP-0001 (30)	2007	39	89

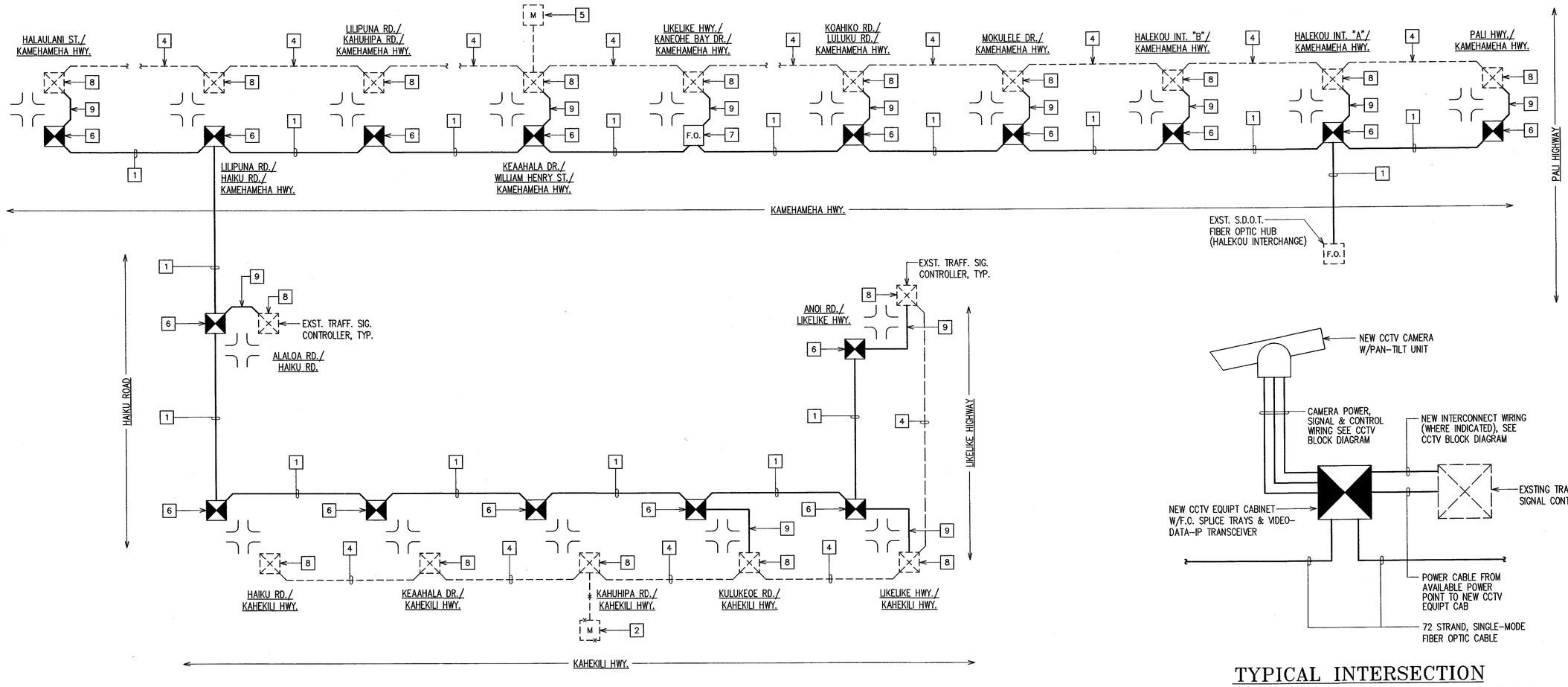

TYPICAL INTERSECTION CCTV TRAFFIC CAMERA DIAGRAM

NOTES:

1. 72 STRAND, SINGLE-MODE FIBER OPTIC CABLE
2. REMOVE AND SALVAGE MASTER CONTROLLER AFTER IP COMMUNICATION SYSTEM IS IN OPERATION. DELIVER TO D.T.S. BASEYARD.
3. DEMOLISH EXST. INTERCONNECT CABLE.
4. EXST INTERCONNECT CABLE TO REMAIN.
5. EXST MASTER CONTROLLER TO REMAIN.
6. SEE TYPICAL INTERSECTION CCTV TRAFFIC CAMERA DIAGRAM, THIS SHEET.
7. NEW HARDENED FIBER OPTIC SWITCH W/NEW 332 CABINET & UPS.
8. EXISTING TRAFFIC SIGNAL SYSTEM CONTROL CABINET.
9. CONNECTION FROM EXISTING TRAFFIC SIGNAL CONTROL CABINET TO NEW CCTV EQUIPMENT CABINET. SEE CCTV BLOCK DIAGRAM, SHEET E-38.

FIBER OPTIC CABLE IS NOT SPLICED AT EVERY SIGNALIZED INTERSECTION

WINDWARD CCTV TRAFFIC CAMERA SYSTEM DIAGRAM

REVISION	DATE	BRIEF	BY	APPROVED

STEVEN H. SAKAI LICENSED PROFESSIONAL ENGINEER No. 7637-S HAWAII, U.S.A.

THIS WORK WAS PREPARED BY ME OR UNDER MY SUPERVISION.

LIC. EXPIRATION: 4/30/08

DEPARTMENT OF TRANSPORTATION SERVICES
CITY AND COUNTY OF HONOLULU
FEDERAL AID NO. STP-0001(30)
COMPUTERIZED TRAFFIC CONTROL SYSTEM
PHASE 9

WINDWARD CCTV TRAFFIC CAMERA SYSTEM
DIAGRAM AND DETAILS

ENGINEER: GTN — DATE: MARCH 2007
DRAFTSMAN: — SCALE: AS NOTED
CHK. BY: SS — REF:
APPROVED: — APPROVED:
DIRECTOR — DIVISION ENGINEER

LAST SAVE: 10/23/08 @ 09:16:29 BY: GTN PLOT SC 1=1
Z:\JOBS\PROJECTS\0803\E-37_2008SD_Sheet1