FED. ROAD DIST. NO.	STATE	FED. AID PROJ. NO.	FISCAL YEAR	SHEET NO.	TOTAL SHEETS
HAWAII	HAW.	STP-0001 (30)	2007	41	89

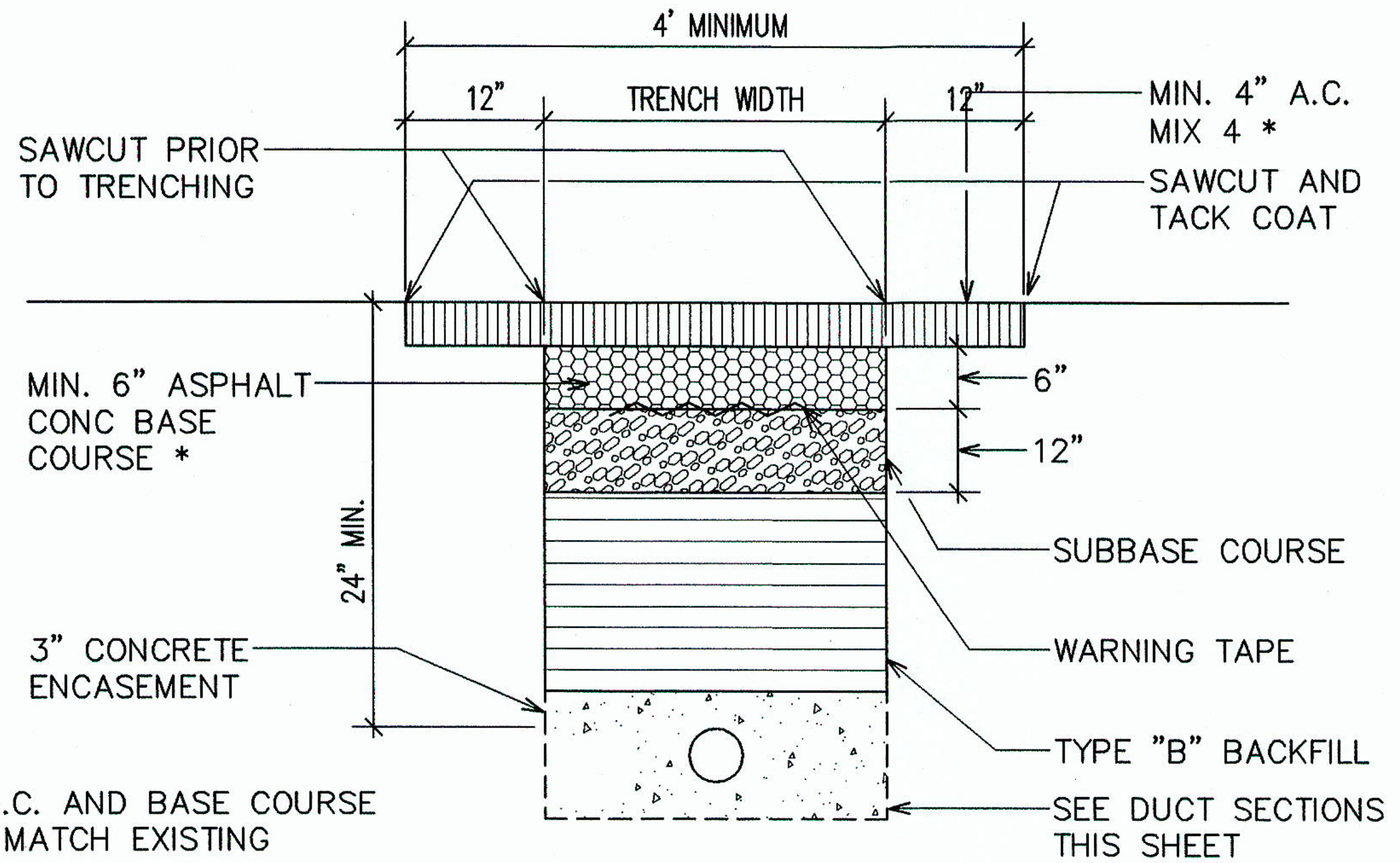
4' MINIMUM
12"
TRENCH WIDTH
12"
SAWCUT PRIOR TO TRENCHING
MIN. 4" A.C. MIX 4 *
SAWCUT AND TACK COAT
MIN. 6" ASPHALT CONC BASE COURSE *
6"
12"
24" MIN.
SUBBASE COURSE
WARNING TAPE
3" CONCRETE ENCASEMENT
TYPE "B" BACKFILL
SEE DUCT SECTIONS THIS SHEET

* A.C. AND BASE COURSE TO MATCH EXISTING THICKNESS OR THE MINIMUM THICKNESS SHOWN, WHICHEVER IS GREATER.

① **EXCAVATION AND BACKFILL SECTION**

WITHIN CITY RIGHT-OF-WAY UNDER EXISTING ROADWAY & PAVED SHOULDER

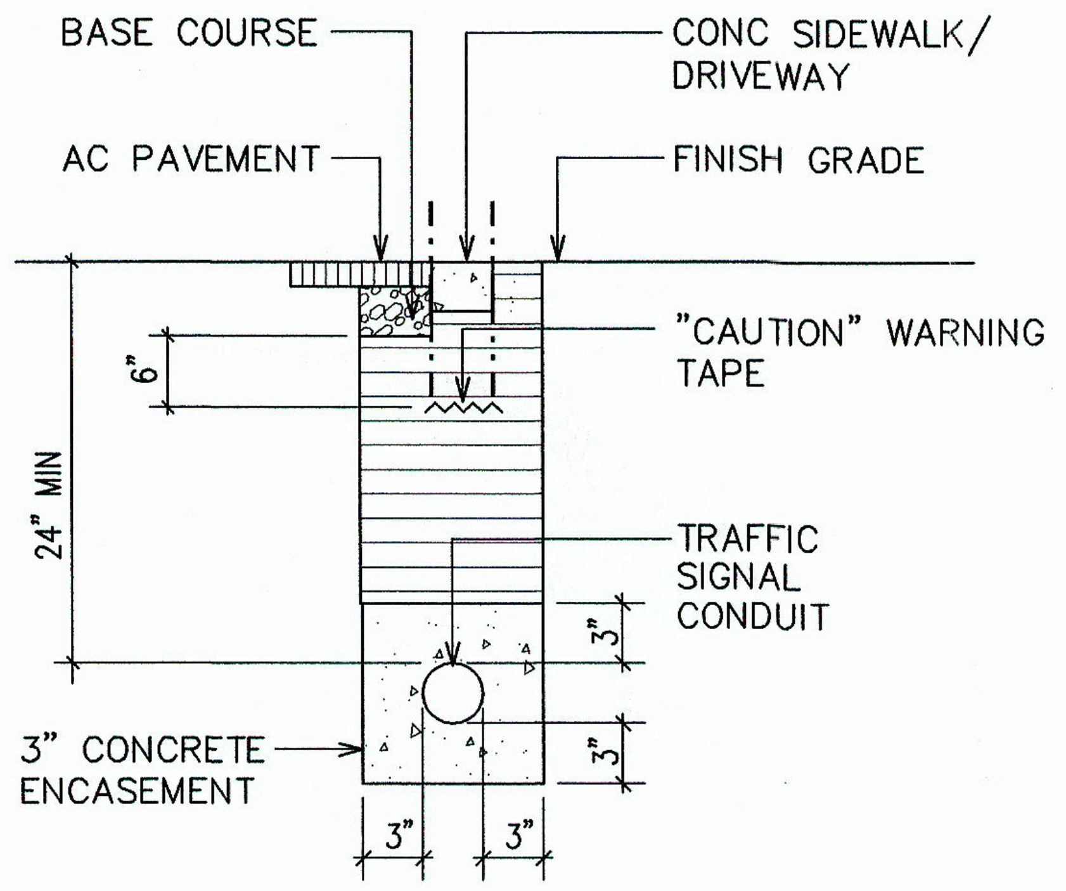
BASE COURSE
AC PAVEMENT
CONC SIDEWALK/ DRIVEWAY
FINISH GRADE
6"
"CAUTION" WARNING TAPE
24" MIN
TRAFFIC SIGNAL CONDUIT
3"
3"
3" CONCRETE ENCASEMENT
3"
3"

SECTION (A)

TYPICAL DUCT SECTIONS

NOT TO SCALE

BACKFILL NOTES:

- ▤ TYPE "A" BACKFILL – EARTH & GRAVEL. ROCK SIZE TO BE 1" MAX. & THE MIXTURE TO CONTAIN NOT MORE THAN 50% BY VOLUME OF ROCK PARTICLES. 95% COMPACTION.
- ▨ TYPE "B" BACKFILL – EARTH & GRAVEL. MIXTURE MUST PASS A 1/2" MESH SCREEN & CONTAIN NOT MORE THAN 20% BY VOLUME OF ROCK PARTICLES. 95% COMPACTION.
- ▧ NOTE – IF NORMAL MATERIAL AT BOTTOM OF TRENCH IS NOT TYPE "B", AN ADDITIONAL 3" SHALL BE EXCAVATED & TYPE "B" BACKFILL PROVIDED.
- ⬚ CONCRETE – 3" ENCASEMENT, 3000 PSI COMPRESSIVE STRENGTH @ 28 DAYS.

CONDUIT SCHEDULE

ITEM	DESCRIPTION
(3S)	3"C, TRAFFIC SIGNAL
(2S)	2"C, TRAFFIC SIGNAL
(1S)	1"C, TRAFFIC SIGNAL

NOTES:

1. SEE ELECTRICAL AND CCTV PLANS FOR DUCTLINE CONDUIT COMPLEMENT.

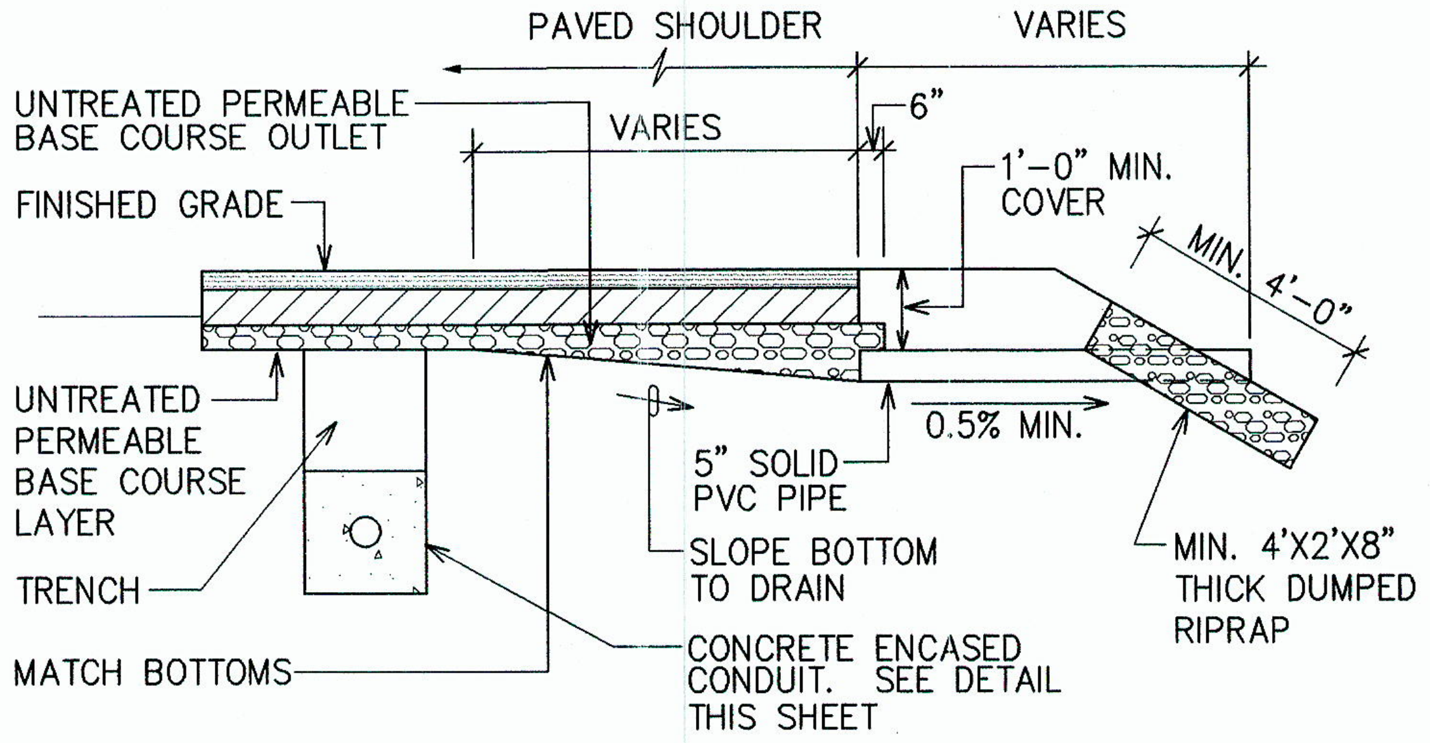
PAVED SHOULDER
VARIES
UNTREATED PERMEABLE BASE COURSE OUTLET
VARIES
6"
FINISHED GRADE
1'-0" MIN. COVER
MIN. 4'-0"
UNTREATED PERMEABLE BASE COURSE LAYER
0.5% MIN.
5" SOLID PVC PIPE
SLOPE BOTTOM TO DRAIN
TRENCH
MIN. 4'X2'X8" THICK DUMPED RIPRAP
CONCRETE ENCASED CONDUIT. SEE DETAIL THIS SHEET
MATCH BOTTOMS

(B / E-39) DETAIL-PERMEABLE BASE COURSE OUTLET

NOT TO SCALE

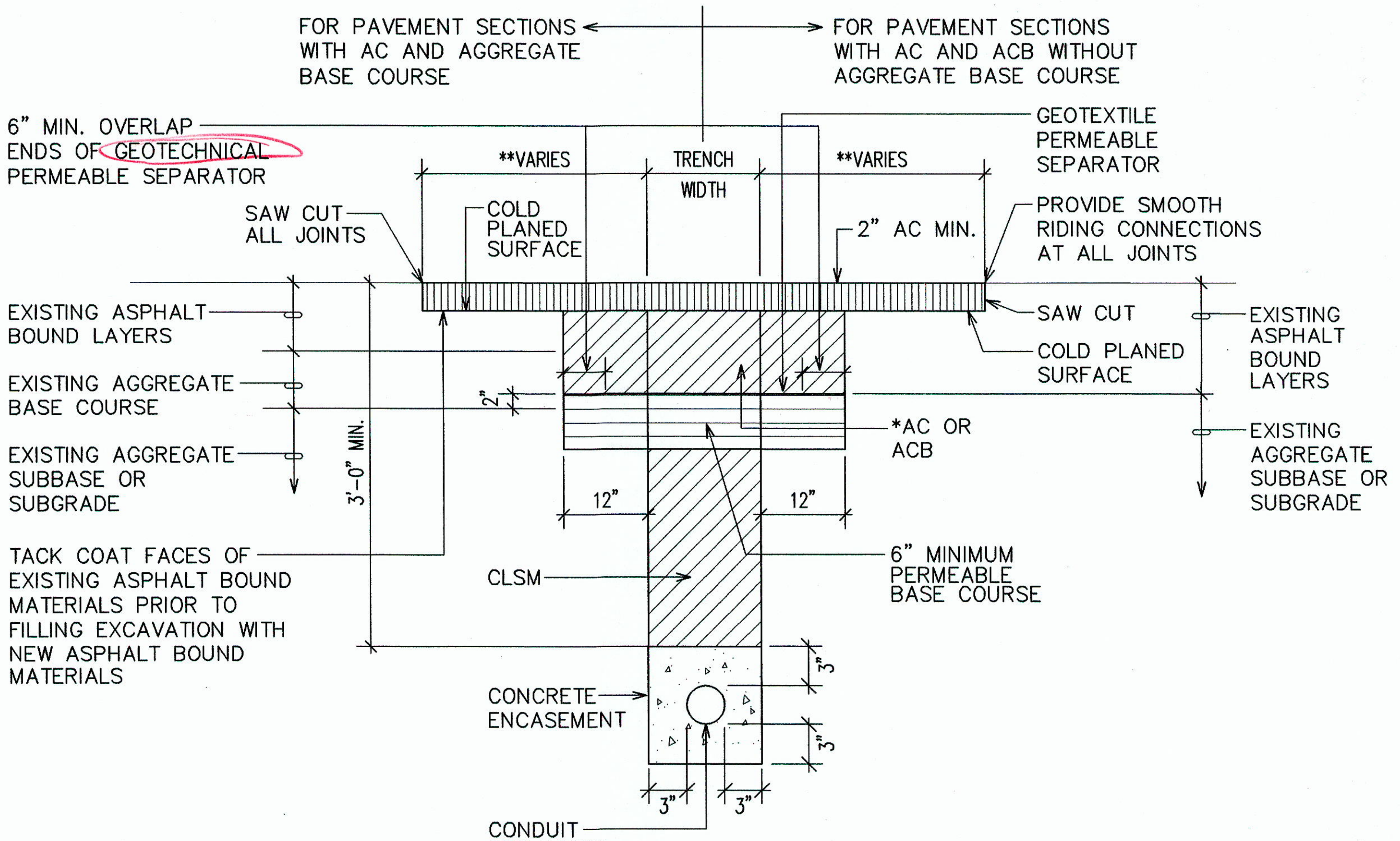
FOR PAVEMENT SECTIONS WITH AC AND AGGREGATE BASE COURSE
FOR PAVEMENT SECTIONS WITH AC AND ACB WITHOUT AGGREGATE BASE COURSE
6" MIN. OVERLAP ENDS OF GEOTECHNICAL PERMEABLE SEPARATOR
GEOTEXTILE PERMEABLE SEPARATOR
**VARIES
TRENCH WIDTH
**VARIES
SAW CUT ALL JOINTS
COLD PLANED SURFACE
2" AC MIN.
PROVIDE SMOOTH RIDING CONNECTIONS AT ALL JOINTS
EXISTING ASPHALT BOUND LAYERS
SAW CUT
COLD PLANED SURFACE
EXISTING ASPHALT BOUND LAYERS
EXISTING AGGREGATE BASE COURSE
2"
*AC OR ACB
EXISTING AGGREGATE SUBBASE OR SUBGRADE
EXISTING AGGREGATE SUBBASE OR SUBGRADE
3'-0" MIN.
12"
12"
TACK COAT FACES OF EXISTING ASPHALT BOUND MATERIALS PRIOR TO FILLING EXCAVATION WITH NEW ASPHALT BOUND MATERIALS
CLSM
6" MINIMUM PERMEABLE BASE COURSE
CONCRETE ENCASEMENT
3"
3"
3"
3"
CONDUIT SEE NOTES

SECTION

*** NOTE:**

1. WHEN THICKNESS LESS THAN 6", USE AC.
2. WHEN THICKNESS 6" OR GREATER, USE ACB OR AC.

**** NOTE:**

1. IF TRENCH ALIGNED TRANSVERSE TO DIRECTION OF TRAVEL, COLD PLANE 6 FEET ON EACH SIDE OF TRENCH.
2. IF TRENCH ALIGNED ALONG DIRECTION OF TRAVEL, COLD PANR TO BOTH EDGES OF LANE IN WHICH EDGE OF TRENCH IS LOCATED.
3. SMOOTHNESS OF PAVED SURFACES:
   THE DISTANCE FROM THE PAVED SURFACE TO THE TESTING EDGE OF A TEN-FOOT STRAIGHT EDGE BETWEEN TWO JOINTS OF CONTACT SHALL NOT EXCEED 3/16".

ASPHALT RESTORATION DETAIL (WITHIN STATE R.O.W.)

INSTALLATION NOTES:

1. ALL WORK PERFORMED SHALL BE SBUJECT TO INSPECTION BY THE STATE AND SHALL BE TO THE STATE'S SATISFACTION.
2. CONSTRUCT THE TRENCH RESTORATION IN ACCORDANCE WITH THE HAWAII STANDARD SPECIFICATIONS FOR ROAD, BRIDGE, AND PUBLIC WORKS CONSTRUCTION AND ITS SPECIAL PROVISIONS, AND THE SPECIFICATION OF INSTALLATION OF MISCELLANEOUS IMPROVEMENTS WITHIN STATE HIGHWAYS.
3. PAVEMENT SMOOTHNESS:
   a OBTAIN A PROFILE OF THE EXISTING ROADWAY SURFACE THAT IS TO HAVE A NEW SURFACE AS A RESULT OF THE RESTORATION OF THE TRENCH EXCAVATION AND SUBMIT THE PROFILE TO DISTRICT ENGINEER BEFORE ANY WORK FOR TRENCH EXCACVATION BEGINS.
   b. OBTAIN A PROFILE OF THE ROADWAY SURFACE AFTER THE ROADWAY SURFACE HAS BEEN REPAVED AND SUBMIT THE PROFILE TO THE DISTRICT ENGINEER. THE PROFILE OF THE ROADWAY SURFACE AFTER REPAVING SHALL BE EQUAL TO OR SMOOTHER THAN THE PROFILE OBTAINED BEFORE TRENCH EXCAVATION BEGAN.
   c. THE DISTANCE FROM THE PAVED SURFACE TO THE TESTING EDGE OF A TEN-FOOT LONG STRAIGHT EDGE BETWEEN TWO POINTS OF CONTACT SHALL NOT EXCEED 3/16 INCH.
4. PLACE ALL UNBOUND MATERIALS IN THE TRENCH AS FOLLOWS:
   a. COMPACTION BY WATER JETTING OR PONDING IS NOT PERMITTED.
   b. ALL UNBOUND MATERIALS, EXCEPT THE PERMEABLE BASE AND ASTM C-33 SIZE 67:

      PLACE MATERIAL IN ACCORDANCE WITH SUBSECTION 206.03 (E) STRUCTURE AND TRENCH BACKFILL OF THE HAWAII STANDARD SPECIFICATIONS FOR ROAD, BRIDGE, AND PUBLIC WORKS CONSTRUCTION.

      TAKE ONE COMPACTION TEST FOR 300 LINEAL FEET OF TRENCH SUBMIT COMPACTION TEST RESULTS TO THE DISTRICT ENGINEER.
   c. PERMEABLE BASE:

      PLACE PERMEABLE MATERIAL IN UNIFORM HORIZONTAL LAYER NOT EXCEEDING 9 INCHES IN COMPACTED THICKNESS.

      COMPACT EACH LAYER WITH 8 PASSES OF A VIBRATING PLATE COMPACTOR. USE HAND TAMPER IF TRENCH TOO NARROW TO ACCOMMODATE THE VIBRATING PLATE COMPACTOR.
   d. ASTM C-33, SIZE 67:

      MATERIAL PLACE UNDER WATER NEED NOT BE COMPACTED.

      MATERIAL PLACE ABOVE WATER:
      i. PLACE MATERIAL IN UNIFORM HORIZONTAL LAYER NOT EXCEEDING 9 INCHES IN LOOSE THICKNESS.
      ii. COMPACT EACH LAYER WITH 8 PASSES OF A VIBRATING PLATE COMPACTOR. USE HAND TAMPER IF TRENCH IS TOO NARROW TO ACCOMMODATE THE VIBRATING PLATE COMPACTOR.
5. TACK COAT FACES OF EXISTING ASPHALT BOUND MATERIALS PRIOR TO FILLING EXCAVATION WITH NEW ASPHALT BOUND MATERIALS.

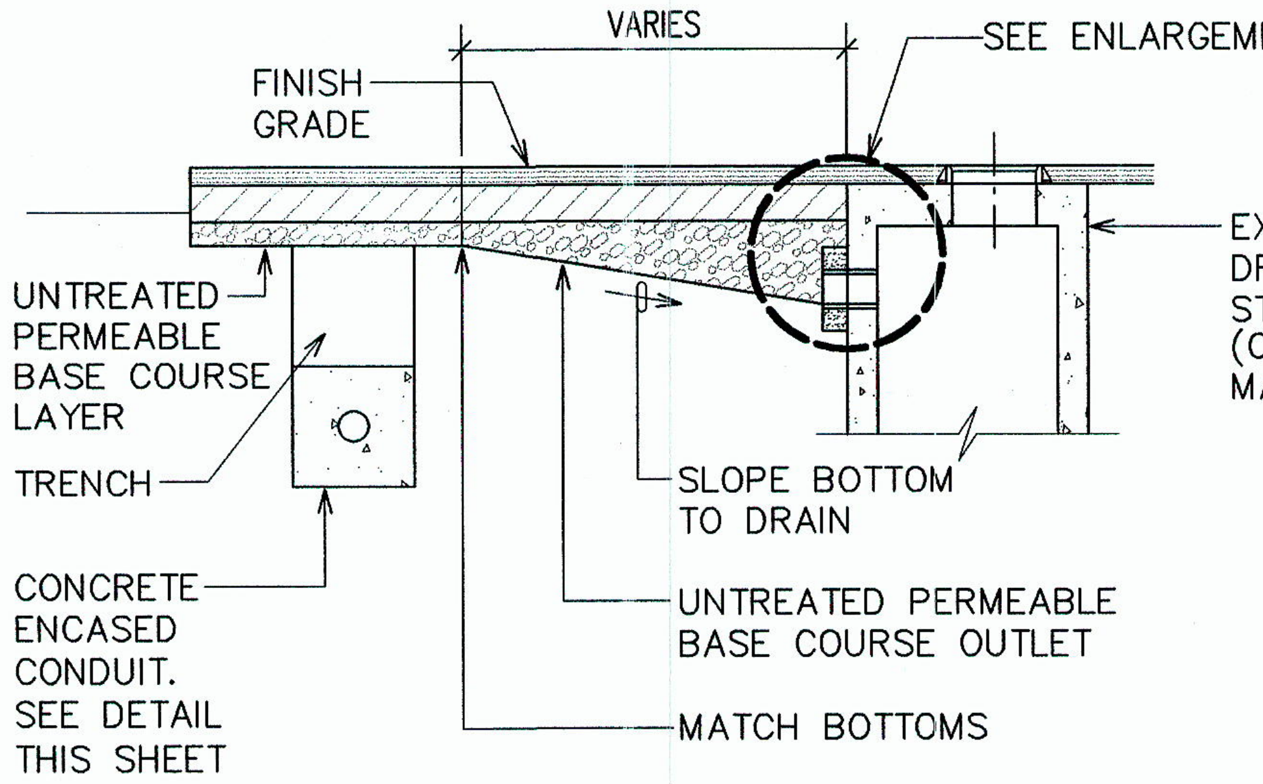
VARIES
SEE ENLARGEMENT
FINISH GRADE
UNTREATED PERMEABLE BASE COURSE LAYER
EXISTING DRAINAGE STRUCTURE (CATCH BASIN, MANHOLE, ETC.)
TRENCH
SLOPE BOTTOM TO DRAIN
CONCRETE ENCASED CONDUIT. SEE DETAIL THIS SHEET
UNTREATED PERMEABLE BASE COURSE OUTLET
MATCH BOTTOMS

SECTION A-A

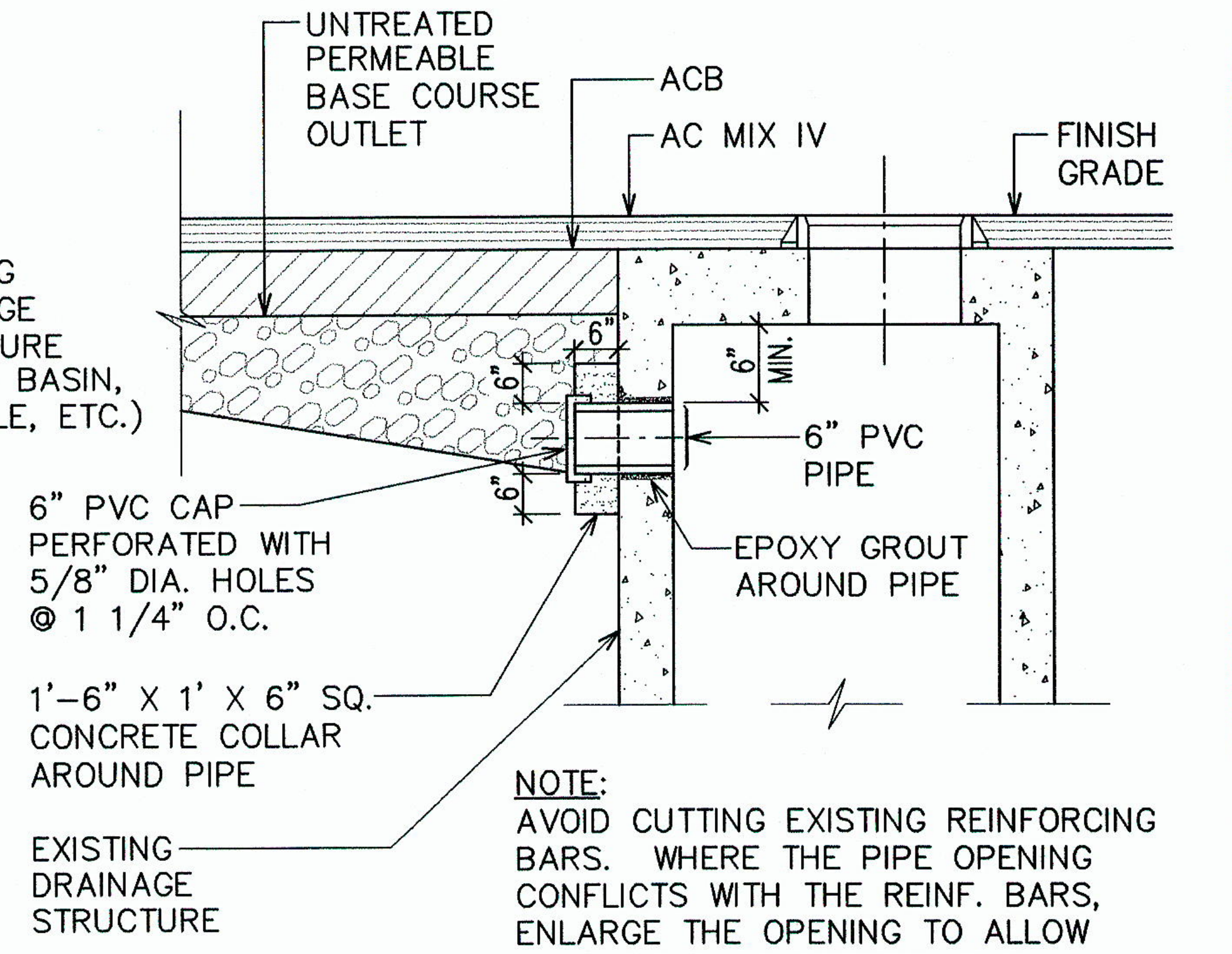
UNTREATED PERMEABLE BASE COURSE OUTLET
ACB
AC MIX IV
FINISH GRADE
6"
6"
6" MIN.
6"
6" PVC PIPE
6" PVC CAP PERFORATED WITH 5/8" DIA. HOLES @ 1 1/4" O.C.
EPOXY GROUT AROUND PIPE
1'-6" X 1' X 6" SQ. CONCRETE COLLAR AROUND PIPE
EXISTING DRAINAGE STRUCTURE

NOTE:

AVOID CUTTING EXISTING REINFORCING BARS. WHERE THE PIPE OPENING CONFLICTS WITH THE REINF. BARS, ENLARGE THE OPENING TO ALLOW THE PIPE PASS BETWEEN THE REINF. BARS. PATCH THE ENLARGED HOLE WITH EPOXY GROUT.

ENLARGEMENT

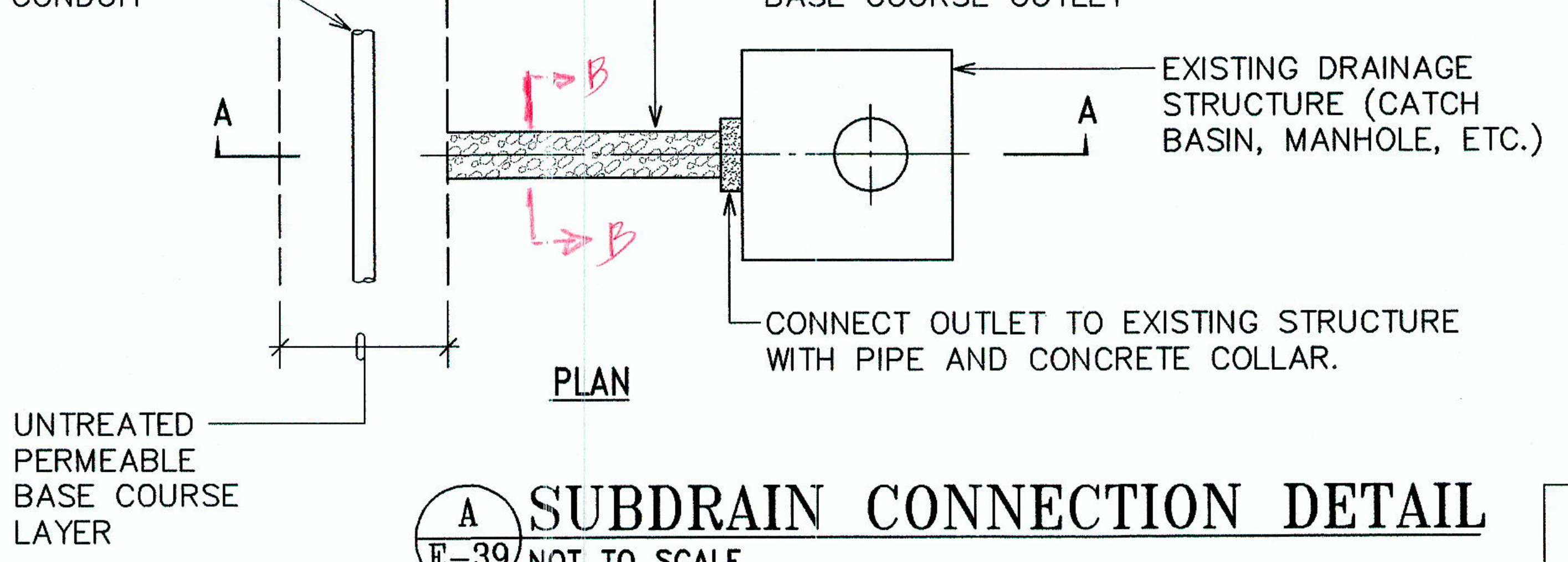
ELECTRICAL CONDUIT
UNTREATED PERMEABLE BASE COURSE OUTLET
A
A
B
B
EXISTING DRAINAGE STRUCTURE (CATCH BASIN, MANHOLE, ETC.)
CONNECT OUTLET TO EXISTING STRUCTURE WITH PIPE AND CONCRETE COLLAR.
UNTREATED PERMEABLE BASE COURSE LAYER

PLAN

(A / E-39) SUBDRAIN CONNECTION DETAIL

NOT TO SCALE

See attached

See Section 605 - Underdrains

REVISION	DATE	BRIEF	BY	APPROVED

STEVEN H. SAKAI
LICENSED PROFESSIONAL ENGINEER
No. 7637-E
HAWAII, U.S.A.

THIS WORK WAS PREPARED BY ME OR UNDER MY SUPERVISION.
LIC. EXPIRATION: 4/30/08

DEPARTMENT OF TRANSPORTATION SERVICES
CITY AND COUNTY OF HONOLULU
FEDERAL AID NO. STP-0001(30)
COMPUTERIZED TRAFFIC CONTROL SYSTEM
PHASE 9

DUCT SECTIONS AND DETAILS

ENGINEER GTN
DRAFTSMAN SS
CHK. BY
APPROVED:
DIRECTOR
DATE MARCH 2007
SCALE AS NOTED
REF.
APPROVED:
DIVISION ENGINEER

Sheet No. 41 of 48 Sheets E-39

FILE	POCKET	FOLDER	NO.

LAST SAVE: 10/25/06 @ 09:14:41 BY: GTN PLOT SC 1'=1'
Z:\ACAD\PROJECTS\26039\E-39_26039_Duct01