| FED. ROAD DIS. NO. | STATE | FED. AID PROJ. NO. | FISCAL YEAR | SHEET NO. | TOTAL SHEETS |
|---|---|---|---|---|---|
| HAWAII | HAW. | NH-083-1(26) | 1994 | 93 R | 238 |

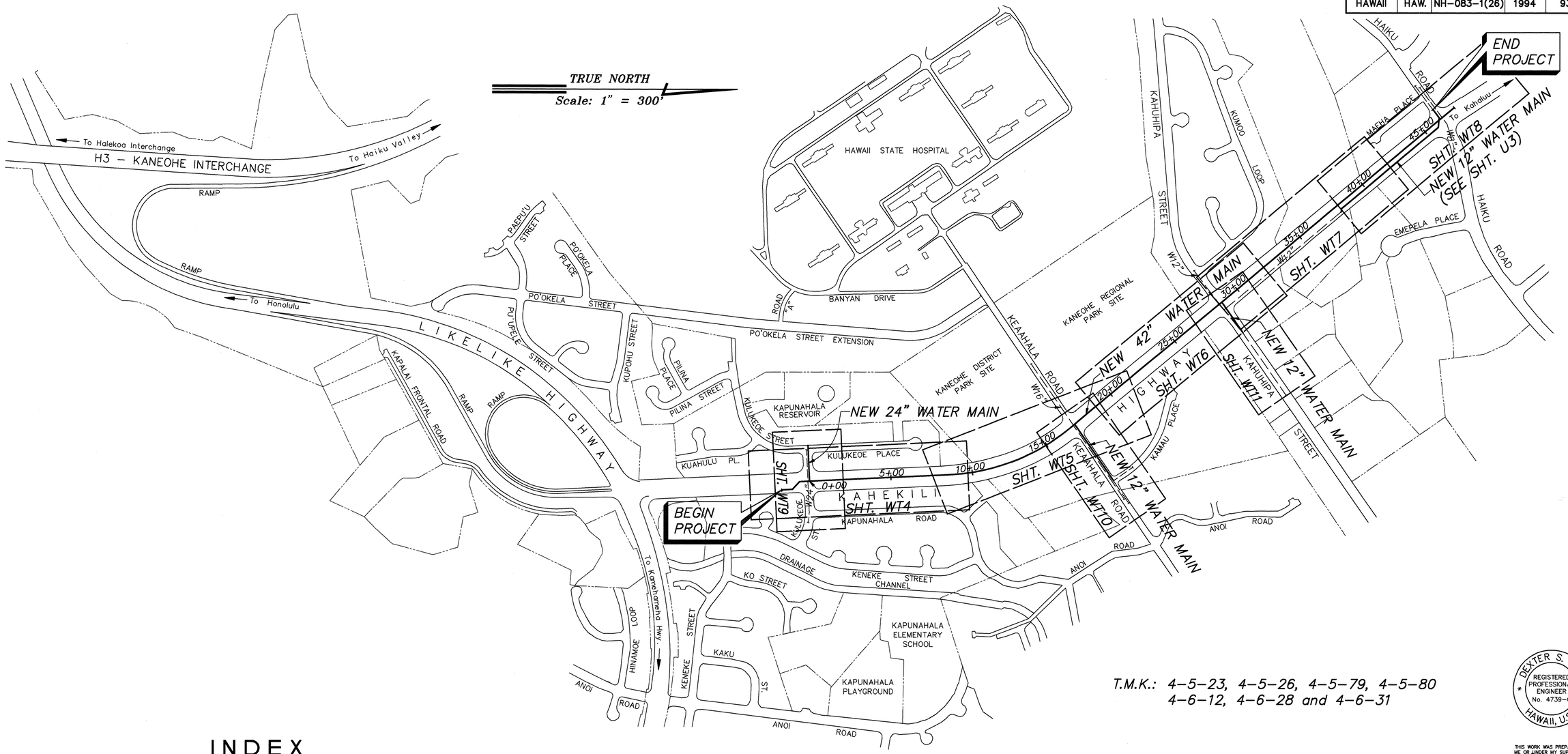


T.M.K.: 4-5-23, 4-5-26, 4-5-79, 4-5-80
4-6-12, 4-6-28 and 4-6-31

DEXTER S. EJI
REGISTERED PROFESSIONAL ENGINEER
No. 4739-C
HAWAII, U.S.A.

THIS WORK WAS PREPARED BY ME OR UNDER MY SUPERVISION

PorEx, Inc.
dba PARK ENGINEERING

## INDEX



## WATER MAIN LAYOUT PLAN

300 150 0 300 600 900
SCALE IN FEET

APPROVED:

Kazu Hayashida 7/18/94
MANAGER AND CHIEF ENGINEER, BWS — DATE

G. Uyeue 10/10/94
CHIEF, DIV. OF PLANNING & SERVICE CONTROL, DWWM (For Sewer Work within Public Road R/W only) — DATE

| DATE | REVISION |
|---|---|
| 7/13/94 | DELETED DEPARTMENT OF TRANSPORTATION SERVICES SIGNATURE BLOCK. ADDED DWWM SIGNATURE BLOCK AND TAX MAP KEY. |

STATE OF HAWAII
DEPARTMENT OF TRANSPORTATION
HIGHWAYS DIVISION

## GENERAL LAYOUT

KAHEKILI HIGHWAY WIDENING
Likelike Hwy. to Vicinity of Haiku Road
F.A. PROJECT NO. NH-083-1(26)

SCALE: AS NOTED — DATE: APRIL 1994

SHEET No. WT1 OF WT21 SHEETS

AS-BUILT 93 R

ORIGINAL PLAN | NOTEBOOK | No. | SURVEY PLOTTED BY | DRAWN BY | TRACED BY | DESIGNED BY | QUANTITIES BY | CHECKED BY | DATE

ROTATED: BASE PT.

LIB: STATE\DOT\KAHEKILI\ADDENDUM WTGENREV 7/13/94 AMM

| FED. ROAD DIS. NO. | STATE | FED. AID PROJ. NO. | FISCAL YEAR | SHEET NO. | TOTAL SHEETS |
|---|---|---|---|---|---|
| HAWAII | HAW. | NH-083-1(26) | 1994 | ADD. 94 | 238 |

## WATER NOTES:

1- UNLESS OTHERWISE SPECIFIED, ALL MATERIALS AND CONSTRUCTION OF WATER SYSTEM FACILITIES AND APPURTENANCES SHALL BE IN ACCORDANCE WITH THE CITY AND COUNTY OF HONOLULU BOARD OF WATER SUPPLY'S "WATER SYSTEM STANDARDS", VOLUME 1, DATED 1985, AND THE "APPROVED MATERIAL LIST AND STANDARD DETAILS FOR WATER SYSTEM CONSTRUCTION", VOLUME 2, DATED 1985, AND THE "WATER SYSTEM EXTERNAL CORROSION CONTROL STANDARDS", VOLUME 3, DATED 1991 AND ALL SUBSEQUENT AMENDMENTS AND ADDITIONS.

2- PAYMENT FOR ITEMS OF WORK CALLED FOR IN THE PLANS, SPECIAL PROVISIONS AND SPECIFICATIONS FOR WHICH PAYMENT IS NOT SPECIFIED SHALL NOT BE MADE DIRECTLY BUT SHALL BE INCLUDED IN THE VARIOUS 42-INCH WATER LINE ITEMS IN THE PROPOSAL, AND NO ADDITIONAL COMPENSATION SHALL BE MADE.

3- THE EXISTENCE AND LOCATION OF UNDERGROUND UTILITIES AND STRUCTURES AS SHOWN ON THE PLANS ARE FROM THE LATEST AVAILABLE DATA BUT ARE NOT GUARANTEED AS TO THE ACCURACY OR THE ENCOUNTERING OF OTHER OBSTACLES DURING THE COURSE OF THE WORK. THE CONTRACTOR SHALL NOT ASSUME THAT WHERE NO UTILITIES ARE SHOWN, THAT NONE EXIST.

4- THE CONTRACTOR IS ALERTED TO HIS ENCOUNTERING OBSTACLES WHETHER SHOWN ON THE PLANS OR NOT, OR WHICH MAY DIFFER IN LOCATION FROM THAT SHOWN ON THE PLANS WHICH MAY INTERFERE WITH HIS NORMAL METHOD OF OPERATIONS. THE CONTRACTOR SHALL TAKE INTO ACCOUNT ANY ADDITIONAL COSTS ANTICIPATED DUE TO THESE CONDITIONS AND SHALL HAVE THESE COSTS INCLUDED IN THE 42" WATER LINE BID ITEMS WHICH HE FEELS MOST APPROPRIATE. NO SEPARATE ADDITIONAL COMPENSATION SHALL BE MADE.

5- THE CONTRACTOR SHALL BE SOLELY RESPONSIBLE FOR ALL ASSUMPTIONS, DEDUCTIONS, OR CONCLUSIONS HE MAY MAKE OR DERIVE FROM THE SUBSURFACE INFORMATION OR DATA FURNISHED ON THE PLANS. THE CONTRACTOR MUST SATISFY HIMSELF THROUGH HIS OWN INVESTIGATIONS AS TO WHAT SUBSURFACE CONDITIONS ARE TO BE ENCOUNTERED.

6- PRIOR TO START OF EXCAVATION, THE CONTRACTOR SHALL NOTIFY ALL AGENCIES AND HAVE THEM LOCATE THEIR RESPECTIVE LINES AFFECTED. THE CONTRACTOR SHALL BE HELD RESPONSIBLE AND SHALL PAY FOR ALL DAMAGES TO AND FOR THE MAINTENANCE AND PROTECTION OF EXISTING UTILITIES AND STRUCTURES.

7- THE CONTRACTOR SHALL NOTIFY THE BOARD OF WATER SUPPLY IN WRITING ONE WEEK PRIOR TO COMMENCING WORK ON THE WATER SYSTEM.

8- THE CONTRACTOR SHALL EXPOSE, VERIFY AND BACKFILL ALL EXISTING UNDERGROUND UTILITIES AND STRUCTURES AT CROSSINGS PRIOR TO EXCAVATION OF PIPELINE TRENCH. THE WATER MAIN ALIGNMENT AND GRADE MAY BE CHANGED IF THERE ARE ANY CONFLICTS WITH ANY EXISTING UNDERGROUND UTILITIES AND STRUCTURES, WHETHER SHOWN ON THE PLANS OR NOT. PAYMENT FOR WORK INCLUDED IN THIS PARAGRAPH WILL BE MADE UNDER THE APPROPRIATE 42-INCH WATER LINE BID ITEMS UNDER THE PROPOSAL, AND NO ADDITIONAL COMPENSATION WILL BE CONSIDERED.

9- ALL A.C. AND CONCRETE PAVEMENT TO BE TRENCHED (FOR PIPELINE OR ANY WATER SYSTEM INSTALLATION) SHALL BE "SAW-CUT" TO THE REQUIRED WIDTH PRIOR TO REPAVING.

10- IF THE CONTRACTOR ELECTS NOT TO EXPOSE AND VERIFY ALL EXISTING UNDERGROUND UTILITIES AND STRUCTURES AT CROSSINGS PRIOR TO PIPELINE EXCAVATION, HE FORFEITS HIS RIGHTS FOR ANY CLAIMS FOR COMPENSATION CAUSED BY ANY CONFLICTS WITH EXISTING UTILITIES AND STRUCTURES.

11- PAYMENT FOR RESTORATION OF DRIVEWAYS, CURBS AND GUTTERS WILL NOT BE MADE DIRECTLY BUT SHALL BE INCLUDED IN THE UNIT PRICES BID IN THE VARIOUS 42-INCH WATER LINE ITEMS OF THE BID.

12- RESTORATION OF PAVEMENT SHALL BE IN ACCORDANCE WITH THE DETAILS SHOWN ON THE PLANS AND SHALL BE DONE WITH EQUIVALENT TO OR BETTER QUALITY MATERIALS. PAYMENT FOR RESTORATION OF EXISTING PAVEMENT WILL NOT BE MADE DIRECTLY BUT SHALL BE INCLUDED IN THE UNIT PRICES BID IN THE VARIOUS 42-INCH WATER LINE ITEMS OF THE BID.

13- UNLESS OTHERWISE SPECIFIED, CONNECTIONS TO EXISTING WATER MAINS AND CHLORINATION OF NEW MAINS SHALL BE DONE BY THE CONTRACTOR, WITH THE BOARD OF WATER SUPPLY'S INSPECTOR COORDINATING THE WORK. FOR DETAILS, CONTACT THE BWS PLANNING AND ENGINEERING DIVISION, ENGINEERING BRANCH, CONSTRUCTION SECTION.

14- WHEREVER CONNECTIONS TO EXISTING MAINS ARE SHOWN ON THE PLANS, THE CONTRACTOR SHALL EXPOSE THE EXISTING MAINS PRIOR TO EXCAVATION OF MAIN TRENCH. THE REMAINING EXCAVATION FOR THE CONNECTION SHALL BE EXCAVATED WHEN THE CONTRACTOR IS READY TO MAKE THE CONNECTION.

15- EXISTING UTILITIES CROSSING THE WATER MAIN ARE TO REMAIN IN SERVICE AND IN PLACE. IF RELOCATED FOR THE CONTRACTOR'S CONVENIENCE, INTERRUPTION OF SERVICE SHALL BE FOR A MINIMUM PERIOD OF TIME AND SHALL BE DONE AT THE CONTRACTOR'S EXPENSE AND ONLY WITH THE APPROVAL OF THE BOARD OF WATER SUPPLY.

16- ALL WATER MAIN TRENCHES SHALL BE BACKFILLED AS CALLED FOR UNDER PART III, SECTION 1.2.2, TRENCH BACKFILL, OF THE "WATER SYSTEM STANDARDS", DATED 1985. COMPACTION OF TRENCH BACKFILL SHALL MEET APPLICABLE REQUIREMENTS OF "THE STANDARD SPECIFICATIONS FOR PUBLIC WORKS CONSTRUCTION", SEPTEMBER 1986, OF THE COUNTIES OF THE STATE OF HAWAII OR THE "HAWAII STANDARD SPECIFICATIONS FOR ROAD AND BRIDGE CONSTRUCTION, 1985, OF THE STATE OF HAWAII".

17- THE CONTRACTOR SHALL BE RESPONSIBLE FOR THE PROPER DISPOSAL OF CHLORINATED WATER TO SAFEGUARD PUBLIC HEALTH AND ENVIRONMENT IN ACCORDANCE WITH APPLICABLE BOARD OF HEALTH REQUIREMENTS.

18- SHOULD MAJOR TREE ROOTS 2" AND ABOVE BE ENCOUNTERED DURING CONSTRUCTION, THESE ROOTS SHALL BE CUT AND SEALED WITH ASPHALTIC PAINT.

19- PIPE ALTERNATIVES:

A. DUCTILE IRON PIPES SHALL BE CLASS 52, WRAPPED WITH POLYETHYLENE.

B. CONCRETE CYLINDER PIPES SHALL BE CLASS 150, WRAPPED WITH POLYETHYLENE.

C. POLYVINYL CHLORIDE PIPES (8-INCH AND 12-INCH) SHALL BE CLASS 150 OR CLASS 200 AS NOTED ON THE PLANS (SEE SHT. U3). ALL VALVES, CAST IRON PIPES AND FITTINGS SHALL BE WRAPPED WITH POLYETHYLENE. NO BENDING OF POLYVINYL CHLORIDE PIPES WILL BE PERMITTED. THE INSTALLATION OF P.V.C. PIPE ACCORDING TO THE PLANS AND SPECIFICATIONS AS BID ON BY THE CONTRACTOR, MAY REQUIRE ADDITIONAL DESIGN WORK, ADDITIONAL FITTINGS AND SPECIAL COUPLINGS, NOT SPECIFIED IN THE PLANS AND SPECIFICATIONS. PAYMENT FOR ADDITIONAL DESIGN WORK, ADDITIONAL FITTINGS AND SPECIAL COUPLINGS SHALL BE CONSIDERED INCIDENTAL TO THE UNIT PRICE BID IN THE PROPOSAL FOR P.V.C. PIPE. ANY ADDITIONAL DESIGN WORK SHALL BE THE RESPONSIBILITY OF THE CONTRACTOR. COPPER TONING WIRE SHALL BE INSTALLED ALONG ENTIRE LENGTH OF MAIN AND ALONG ALL NON-METALLIC LATERALS.

PAYMENT OF POLYETHYLENE WRAP FOR DUCTILE IRON PIPES SHALL BE INCIDENTAL TO THE UNIT PRICE BID FOR D.I. PIPE. PAYMENT FOR POLYETHYLENE WRAP FOR CONCRETE CYLINDER PIPES SHALL BE INCIDENTAL TO THE UNIT PRICE BID FOR CONCRETE CYLINDER PIPES.

D. IF CORROSION PROTECTION IS PROVIDED, FACTORY TAPE COATING OR FIELD TAPE WRAPPING AS CALLED FOR IN THE CORROSION PROTECTION PLAN (SHT. WT16) FOR DUCTILE IRON PIPES AND FITTINGS SHOULD BE PROVIDED.

E. IF CORROSION PROTECTION IS PROVIDED FOR DUCTILE IRON PIPES, CONCRETE CYLINDER PIPES, VALVES AND FITTINGS, POLYETHYLENE WRAP IS NOT REQUIRED.

20- ANY COST INCURRED BY GASCO, HECO, OR HTCO RESULTING FROM THE INSTALLATION OF THE NEW 42" WATER MAIN, THE NEW 24" WATER MAIN ON KULUKEOE ST. AND THE NEW 12" WATER MAINS ON KEAAHALA RD. AND KAHUHIPA ST. WHEN DIRECTED BY THE BOARD OF WATER SUPPLY SHALL BE PAID BY THE BOARD OF WATER SUPPLY THROUGH THE CONTRACTOR. THE PAYMENT SHALL BE ONLY FOR THE ACTUAL COST AS SHOWN ON THE UTILITY COMPANY'S INVOICE. NO PAYMENT WILL BE MADE FOR PROFIT, TAX, OVERHEAD AND BOND COST.

21- DURING NON-SKID HOURS, THE TRENCHES ON CITY STREETS SHALL BE COVERED WITH NON-SKID STEEL PLATES AND ALL LANES MAINTAINED OPEN FOR TRAFFIC.

22- UNLESS OTHERWISE SPECIFIED, ALL ABANDONED LINES SHALL BE CUT AND PLUGGED WITH CLASS DWS 2000 CONCRETE. PAYMENT FOR CUTTING AND PLUGGING WILL NOT BE MADE DIRECTLY BUT WILL BE INCIDENTAL TO THE VARIOUS ITEMS OF THE PROPOSAL. THE CONTRACTOR SHALL VERIFY THE SIZE AND TYPE OF LINE TO BE PLUGGED.

23- ALL SALVAGE MATERIALS SHALL BE CLEANED, REPAINTED AND DELIVERED TO THE KALIHI BWS CORPORATION YARD.

24- ALL WATER MAINS AND APPURTENANCES SHALL BE SUBJECTED TO A HYDROSTATIC TEST PRESSURE OF 150 PSI OR 200 PSI (FOR 12" WATER LINE SHOWN ON SHT. U3) BY THE CONTRACTOR IN THE PRESENCE OF THE BOARD OF WATER SUPPLY INSPECTOR.

25- DEMOLISH AND BACKFILL ALL ABANDONED MANHOLES AND VALVE BOXES. SALVAGE ALL CAST IRON FRAMES AND COVERS.

26- THE NEW WATER MAIN SHALL BE COMPLETED IN PHASES AS SHOWN ON THE PLANS. THE CONTRACTOR SHALL COMPLETE EACH PHASE INCLUDING INSTALLATION AND TESTING OF THE WATER MAIN, TRANSFER OF SERVICES AND FINAL PAVING OF THE STREET PRIOR TO BEGINNING THE NEXT PHASE.

27- THE CONTRACTOR SHALL NOTIFY THE NEAREST FIRE DEPARTMENT BATTALION CHIEF FOR THE INSTALLATION OR RELOCATION OF FIRE HYDRANT REFLECTIVE MARKERS.

28- MECHANICAL JOINT GLANDS SHALL BE "STRAIGHT-SIDED" AND POLYGON IN SHAPE AS DESCRIBED IN AWWA CIII AND SHALL BE APPLICABLE TO BOTH CAST IRON AND DUCTILE IRON GLANDS OR AN APPROVED EQUAL ON A JOB TO JOB BASIS.

29- ALL AIR RELIEF VALVES SHALL HAVE A WORKING PRESSURE RANGE OF 0 TO 150 PSI OR AS SPECIFIED ON THE PLANS (SHT. U3, 0-200 PSI).

30- CONCRETE CYLINDER PIPE STORED AT THE JOB SITE OR AT THE CONTRACTOR'S STOREYARD SHALL BE ADDITIONALLY WATER CURED UNTIL INSTALLED AND BACKFILLED IN THE TRENCH.

31- CORPORATION STOPS NEEDED FOR AIR RELIEF VALVES AND VALVE APPURTENANCES SHALL BE INSTALLED ON THE CONCRETE CYLINDER PIPE AT THE TIME WHEN THE PIPE IS MANUFACTURED.

CONNECTION SCHEDULE:

| CONNECTION STATION | NORMAL WORKING HOURS | AFTER WORKING HOURS | REMARKS |
|---|---|---|---|
| ⊕ STA. 5+71 (KULUKEOE) | X | | 8 HOURS (MAX.) |
| ⊕ STA. 5+96 (KULUKEOE) | X | | 8 HOURS (MAX.) |
| W.L. STA. 4+24 (KEAAHALA) | X | | 8 HOURS (MAX.) |
| W.L. STA. 1+71.5 (KAHUHIPA) | X | | 8 HOURS (MAX.) |
| ⊕ STA. 54+75 (KAHEKILI) | X | | |
| W.L. STA. 9+25.57 (HAIKU) | X | | 8 HOURS (MAX.) |

| DATE | REVISION |
|---|---|
| 6/07/94 | REVISED WATER NOTE NO. 2, 8, 9, 10, 11, 12, 19, 24 AND 29. |

DEXTER S. EJI
REGISTERED PROFESSIONAL ENGINEER No. 4739-C
HAWAII, U.S.A.

APPROVED:

CHIEF, PLANNING & ENGINEERING, B.W.S. — DATE 7/12/94

THIS WORK WAS PREPARED BY ME OR UNDER MY SUPERVISION
PorEn, Inc. dba PARK ENGINEERING

STATE OF HAWAII
DEPARTMENT OF TRANSPORTATION
HIGHWAYS DIVISION

GENERAL WATER NOTES

KAHEKILI HIGHWAY WIDENING
Likelike Hwy. to Vicinity of Haiku Road
F.A. PROJECT NO. NH-083-1(26)

SCALE: AS NOTED — DATE: APRIL 1994

SHEET No. WT2 OF WT21 SHEETS

AS-BUILT ADD. 94

ORIGINAL PLAN — NOTEBOOK No. — SURVEY PLOTTED BY — DRAWN BY — TRACED BY — DESIGNED BY — QUANTITIES BY — CHECKED BY — DATE

ROTATED: BASE PT.

LIB: STATE\DOT\KAHEKILI\ADDENDUM AMM WTNOTER 6/20/94

| FED. ROAD DIS. NO. | STATE | FED. AID PROJ. NO. | FISCAL YEAR | SHEET NO. | TOTAL SHEETS |
|---|---|---|---|---|---|
| HAWAII | HAW. | NH-083-1(26) | 1994 | ADD. 95 | 238 |

## CONSTRUCTION NOTES: (FOR CITY: RIGHT-OF-WAY)

1. THE CONTRACTOR SHALL PERFORM APPLICABLE CONSTRUCTION WORK ALL IN ACCORDANCE WITH THE "STANDARD DETAILS FOR PUBLIC WORKS CONSTRUCTION" DATED SEPTEMBER 1984 AS AMENDED AND THE "STANDARD SPECIFICATIONS FOR PUBLIC WORKS CONSTRUCTION" DATED SEPTEMBER 1986 OF THE DEPARTMENTS OF PUBLIC WORKS, CITY AND COUNTY OF HONOLULU AND THE REVISED ORDINANCES OF HONOLULU, 1978, AS AMENDED.
2. VERIFY AND CHECK ALL DIMENSIONS AND DETAILS SHOWN ON THE DRAWINGS PRIOR TO THE START OF CONSTRUCTION. ANY DISCREPANCY SHALL BE IMMEDIATELY BROUGHT TO THE ATTENTION OF THE ENGINEER FOR CLARIFICATION.
3. ALL EXISTING UTILITIES WHETHER OR NOT SHOWN ON THE PLANS SHALL BE PROTECTED AT ALL TIMES BY THE CONTRACTOR DURING CONSTRUCTION AND ANY DAMAGE TO THEM SHALL BE REPAIRED AND PAID FOR BY THE CONTRACTOR.
4. THE CONTRACTOR SHALL NOTIFY ALL AGENCIES TO VERIFY THE ACTUAL LOCATION OF ALL UTILITIES IN THE PROJECT AREA PRIOR TO EXCAVATING. THE CONTRACTOR SHALL COORDINATE ALL WORK.
5. WHEN TRENCH EXCAVATIONS ADJACENT TO OR UNDER EXISTING STRUCTURES OR FACILITIES, THE CONTRACTOR SHALL BE RESPONSIBLE FOR PROPERLY SHEETING AND BRACING THE EXCAVATION AND STABILIZING THE EXISTING GROUND TO RENDER IT SAFE AND SECURE FROM POSSIBLE SLIDES, CAVE-INS AND SETTLEMENT, AND FOR PROPERLY SUPPORTING EXISTING STRUCTURES AND FACILITIES WITH BEAMS, STRUTS OR UNDERPINNING TO FULLY PROTECT IT FROM DAMAGE.
6. BACKFILL UNDER EXISTING STRUCTURES OR FACILITIES SHALL BE SANDY OR GRANULAR MATERIAL COMPLETELY PLACED AS SOON AS THE PIPE IS LAID AND TESTED. THE BACKFILL MATERIAL SHALL BE RAMMED WITH PROPER TOOLS UNTIL COMPACTED FROM 90% TO 95% OF ITS MAXIMUM DENSITY.
7. ALL WORK CALLED FOR ON THE PLANS AND NOT ITEMIZED IN THE PROPOSAL AND ALL WORK NOT CALLED FOR BUT REQUIRED FOR THE CONSTRUCTION OF THIS PROJECT, SHALL BE CONSIDERED INCIDENTAL TO STRUCTURE EXCAVATION FOR WATER SYSTEM.
8. THE CONTRACTOR SHALL RESTORE TO THEIR ORIGINAL CONDITION ALL IMPROVEMENTS DAMAGED AS A RESULT OF THE CONSTRUCTION, INCLUDING PAVEMENTS, EMBANKMENTS CURBS, SIGNS, LANDSCAPING, STRUCTURES, UTILITIES, WALLS, FENCES, ETC. UNLESS PROVIDED FOR SPECIFICALLY IN THE PROPOSAL, DEMOLITION AND RESTORATION OF EXISTING ITEMS SHALL BE INCIDENTAL AND INCLUDED WITHIN THE AMOUNT PAID FOR STRUCTURE EXCAVATION FOR WATER SYSTEM.
9. NO STOCKPILING OF MATERIAL WILL BE PERMITTED ON CITY AND COUNTY STREETS.
10. THE CONTRACTOR SHALL OBSERVE AND COMPLY WITH PUBLIC HEALTH REGULATIONS TITLE 11, CHAPTERS 42, 43, 44A, AND 44B REGARDING NOISE CONTROL FOR OAHU.
11. THE UNDERGROUND PIPES, CABLES OR DUCTLINES KNOWN TO EXIST BY THE ENGINEER FROM HIS SEARCH OF RECORDS ARE INDICATED ON THE PLANS. THE CONTRACTOR SHALL VERIFY THE LOCATION AND DEPTH OF THE FACILITIES AND EXERCISE PROPER CARE IN EXCAVATING IN THE AREA. WHEREVER CONNECTIONS OF NEW UTILITIES TO EXISTING UTILITIES ARE SHOWN ON THE PLANS, THE CONTRACTOR SHALL EXPOSE THE EXISTING LINES AT THE PROPOSED CONNECTIONS TO VERIFY THEIR LOCATIONS AND DEPTHS PRIOR TO EXCAVATION FOR THE NEW LINES.
12. THE CONTRACTOR SHALL NOTIFY THE DEPARTMENT OF PUBLIC WORKS, DIVISION OF ENGINEERING, CONSTRUCTION BRANCH, SEVEN (7) DAYS PRIOR TO COMMENCEMENT OF CONSTRUCTION.
13. LOOK FOR BENCHMARKS ON EACH SHEET.

## GENERAL NOTES FOR TRAFFIC CONTROL PLAN

1- THE PERMITEE SHALL MAKE ADJUSTMENTS AT INTERSECTIONS, DRIVEWAYS, BRIDGE STRUCTURES, ETC., TO FIT FIELD CONDITIONS.

2- CONES OR DELINEATORS SHALL BE EXTENDED TO A POINT WHERE THEY ARE VISIBLE TO APPROACHING TRAFFIC.

3- TRAFFIC CONTROL DEVICES SHALL BE INSTALLED SUCH THAT THE SIGN OR DEVICE FARTHEST FROM THE WORK AREA SHALL BE PLACED FIRST. THE OTHERS SHALL THEN BE PLACED PROGRESSIVELY TOWARD THE WORK AREA.

4- REGULATORY AND WARNING SIGNS WITHIN THE CONSTRUCTION ZONE THAT ARE IN CONFLICT WITH THE TRAFFIC CONTROL PLANS SHALL BE REMOVED OR COVERED. ALL SIGNS SHALL BE RESTORED UPON COMPLETION OF THE WORK.

5- FLAGGERS AND/OR POLICE OFFICERS SHALL BE IN SIGHT OF EACH OTHER OR IN DIRECT COMMUNICATION AT ALL TIMES.

6- WHEN REQUIRED BY THE ISSUING OFFICE, THE PERMITTEE SHALL INSTALL A FLASHING ARROW SIGNAL AS SHOWN ON THE TRAFFIC CONTROL PLANS.

7- ALL TRAFFIC LANES SHALL BE A MINIMUM OF 10 FEET WIDE.

8- ALL CONSTRUCTION WARNING SIGNS SHALL BE PROMPTLY REMOVED OR COVERED WHENEVER THE MESSAGE IS NOT APPLICABLE OR NOT IN USE.

9- THE BACKS OF ALL SIGNS USED FOR TRAFFIC CONTROL SHALL BE APPROPRIATELY COVERED TO PRECLUDE THE DISPLAY OF INAPPLICABLE SIGN MESSAGES (I.E., WHEN SIGNS HAVE MESSAGES ON BOTH FACES).

10- AT THE END OF EACH DAY'S WORK OR AS SOON AS THE WORK IS COMPLETED, THE PERMITTEE SHALL REMOVE ALL TRAFFIC CONTROL DEVICES NO LONGER NEEDED TO PERMIT FREE AND SAFE PASSAGE OF PUBLIC TRAFFIC. REMOVAL SHALL BE IN THE REVERSE ORDER OF INSTALLATION.

11- REPLACE PERMANENT PAVEMENT MARKINGS AND TRAFFIC SIGNS UPON COMPLETION OF EACH PHASE OF WORK.

## TRAFFIC NOTES (FOR CITY: RIGHT-OF-WAY):

SEE SHEET SS1

DEXTER S. EJI
REGISTERED PROFESSIONAL ENGINEER
No. 4739-C
HAWAII, U.S.A.

THIS WORK WAS PREPARED BY ME OR UNDER MY SUPERVISION

PaEn, Inc.
dba PARK ENGINEERING

APPROVED:

10/6/94
CHIEF, DIV. OF ENGINEERING, D.P.W. (For Construction within City R.O.W. only) DATE

| DATE | REVISION |
|---|---|
| 6/07/94 | DELETED TRAFFIC NOTES AND DEPT. OF TRANS. SERVICES SIGNATURE BLOCK. |

STATE OF HAWAII
DEPARTMENT OF TRANSPORTATION
HIGHWAYS DIVISION

## GENERAL WATER NOTES

KAHEKILI HIGHWAY WIDENING
Likelike Hwy. to Vicinity of Haiku Road
F.A. PROJECT NO. NH-083-1(26)

SCALE: AS NOTED DATE: APRIL 1994

SHEET No. WT3 OF WT21 SHEETS

AS-BUILT ADD. 95

ORIGINAL PLAN | NOTEBOOK No. | SURVEY PLOTTED BY | DRAWN BY | TRACED BY | DESIGNED BY | QUANTITIES BY | CHECKED BY | DATE

ROTATED: BASE PT.

LIB: STATE\DOT\KAHEKILI\ADDENDUM WTN01E28 6/06/94 AMM

| FED. ROAD DIS. NO. | STATE | FED. AID PROJ. NO. | FISCAL YEAR | SHEET NO. | TOTAL SHEETS |
|---|---|---|---|---|---|
| HAWAII | HAW. | NH-083-1(26) | 1994 | ADD 96 | 238 |

**Note:**
For New Drain Line, See Plan on Sheet D9 and D10.

TRUE NORTH
Scale: 1" = 40'

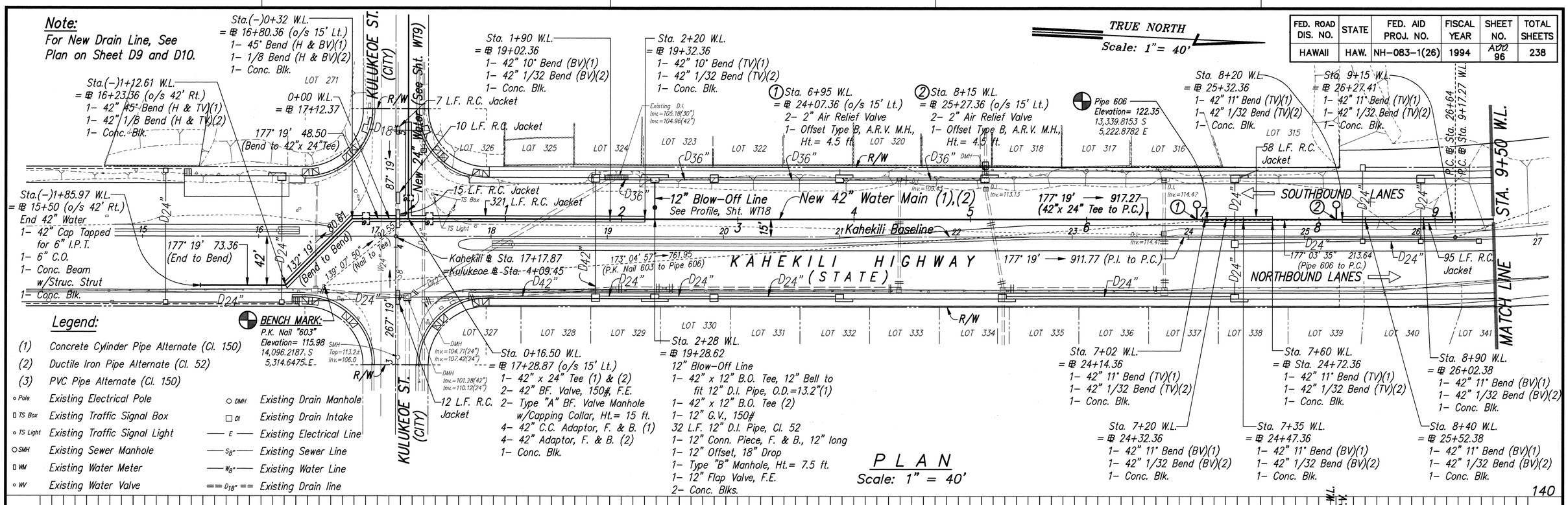


**Legend:**

(1) Concrete Cylinder Pipe Alternate (Cl. 150)
(2) Ductile Iron Pipe Alternate (Cl. 52)
(3) PVC Pipe Alternate (Cl. 150)

- Pole — Existing Electrical Pole
- TS Box — Existing Traffic Signal Box
- TS Light — Existing Traffic Signal Light
- SMH — Existing Sewer Manhole
- WM — Existing Water Meter
- WV — Existing Water Valve
- DMH — Existing Drain Manhole
- DI — Existing Drain Intake
- E — Existing Electrical Line
- $S_{8"}$ — Existing Sewer Line
- $W_{8"}$ — Existing Water Line
- $D_{18"}$ — Existing Drain line

PLAN
Scale: 1" = 40'

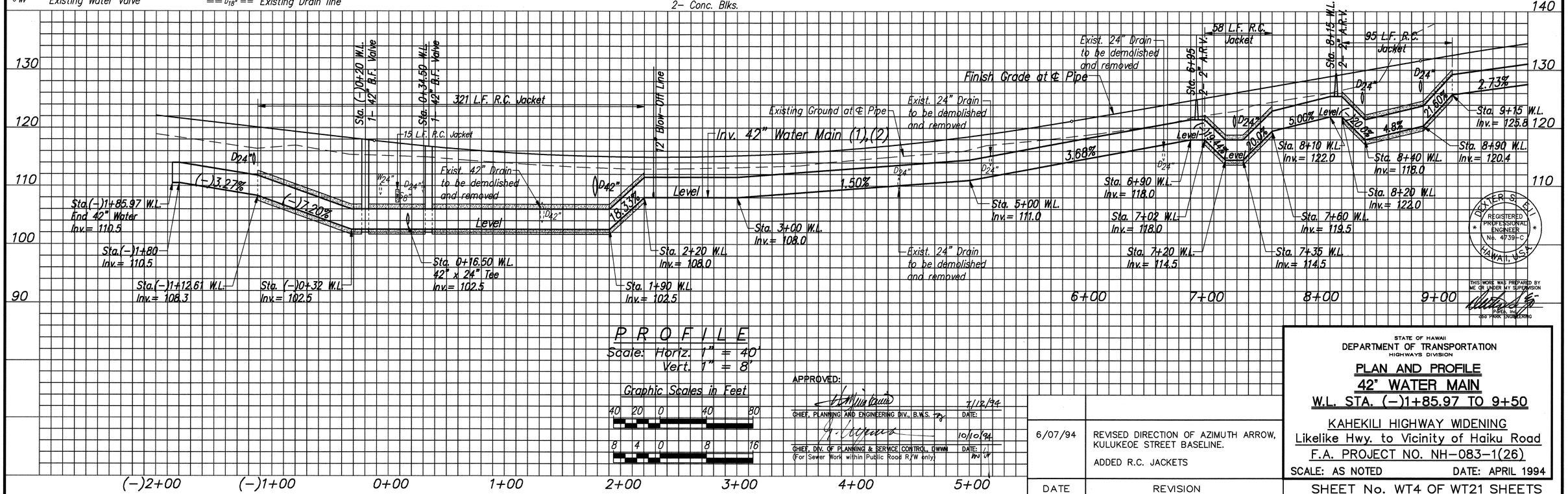


PROFILE
Scale: Horiz. 1" = 40'
Vert. 1" = 8'

Graphic Scales in Feet
40 20 0 40 80
8 4 0 8 16

APPROVED:
CHIEF, PLANNING AND ENGINEERING DIV., B.W.S. — DATE: 7/12/94
CHIEF, DIV. OF PLANNING & SERVICE CONTROL, DWWM (For Sewer Work within Public Road R/W only) — DATE: 10/10/94

| DATE | REVISION |
|---|---|
| 6/07/94 | REVISED DIRECTION OF AZIMUTH ARROW, KULUKEOE STREET BASELINE. ADDED R.C. JACKETS |

STATE OF HAWAII
DEPARTMENT OF TRANSPORTATION
HIGHWAYS DIVISION

**PLAN AND PROFILE**
**42" WATER MAIN**
**W.L. STA. (-)1+85.97 TO 9+50**

KAHEKILI HIGHWAY WIDENING
Likelike Hwy. to Vicinity of Haiku Road
F.A. PROJECT NO. NH-083-1(26)

SCALE: AS NOTED — DATE: APRIL 1994

SHEET No. WT4 OF WT21 SHEETS

DUANE S. DYER, JR. — REGISTERED PROFESSIONAL ENGINEER No. 4739-C — HAWAII, U.S.A.

THIS WORK WAS PREPARED BY ME OR UNDER MY SUPERVISION
Dyer, Inc. dba PARK ENGINEERING

SURVEY PLOTTED BY
DRAWN BY
TRACED BY
DESIGNED BY
QUANTITIES BY
CHECKED BY
DATE
ORIGINAL PLAN
NOTEBOOK
No.

ROTATED: 92° 41'
BASE PT: 0.0

LIB: STATE\DOT\KAHEKILI\ADDENDUM WTPLPRTR 6/06/94 AMM

AS-BUILT ADD. 96

| FED. ROAD DIS. NO. | STATE | FED. AID PROJ. NO. | FISCAL YEAR | SHEET NO. | TOTAL SHEETS |
|---|---|---|---|---|---|
| HAWAII | HAW. | NH-083-1(26) | 1994 | ADD. 97 | 238 |

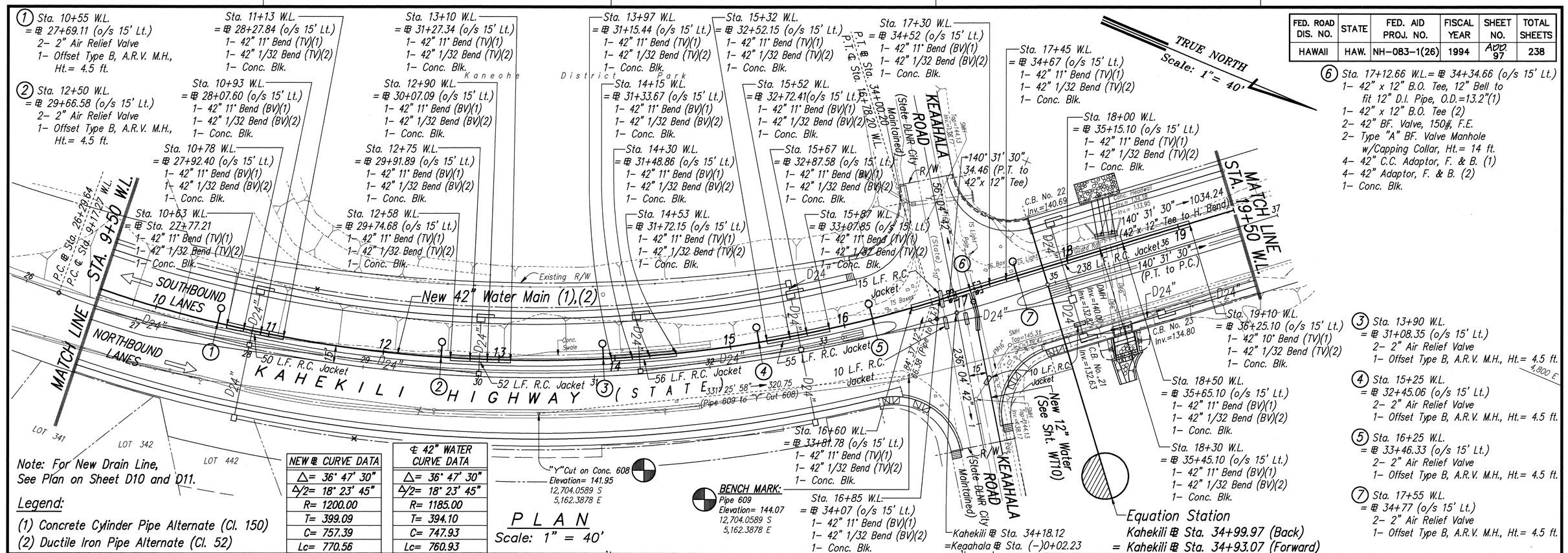


(1) Sta. 10+55 W.L. = ⊕ 27+69.11 (o/s 15' Lt.)
2- 2" Air Relief Valve
1- Offset Type B, A.R.V. M.H., Ht.= 4.5 ft.

(2) Sta. 12+50 W.L. = ⊕ 29+66.58 (o/s 15' Lt.)
2- 2" Air Relief Valve
1- Offset Type B, A.R.V. M.H., Ht.= 4.5 ft.

(3) Sta. 13+90 W.L. = ⊕ 31+08.35 (o/s 15' Lt.)
2- 2" Air Relief Valve
1- Offset Type B, A.R.V. M.H., Ht.= 4.5 ft.

(4) Sta. 15+25 W.L. = ⊕ 32+45.06 (o/s 15' Lt.)
2- 2" Air Relief Valve
1- Offset Type B, A.R.V. M.H., Ht.= 4.5 ft.

(5) Sta. 16+25 W.L. = ⊕ 33+46.33 (o/s 15' Lt.)
2- 2" Air Relief Valve
1- Offset Type B, A.R.V. M.H., Ht.= 4.5 ft.

(6) Sta. 17+12.66 W.L.= ⊕ 34+34.66 (o/s 15' Lt.)
1- 42" x 12" B.O. Tee, 12" Bell to fit 12" D.I. Pipe, O.D.=13.2"(1)
1- 42" x 12" B.O. Tee (2)
2- 42" BF. Valve, 150#, F.E.
2- Type "A" BF. Valve Manhole w/Capping Collar, Ht.= 14 ft.
4- 42" C.C. Adaptor, F. & B. (1)
4- 42" Adaptor, F. & B. (2)
1- Conc. Blk.

(7) Sta. 17+55 W.L. = ⊕ 34+77 (o/s 15' Lt.)
2- 2" Air Relief Valve
1- Offset Type B, A.R.V. M.H., Ht.= 4.5 ft.

Sta. 10+93 W.L. = ⊕ 28+07.60 (o/s 15' Lt.)
1- 42" 11° Bend (BV)(1)
1- 42" 1/32 Bend (BV)(2)
1- Conc. Blk.

Sta. 10+78 W.L. = ⊕ 27+92.40 (o/s 15' Lt.)
1- 42" 11° Bend (BV)(1)
1- 42" 1/32 Bend (BV)(2)
1- Conc. Blk.

Sta. 10+63 W.L. = ⊕ Sta. 27+77.21
1- 42" 11° Bend (TV)(1)
1- 42" 1/32 Bend (TV)(2)
1- Conc. Blk.

Sta. 11+13 W.L. = ⊕ 28+27.84 (o/s 15' Lt.)
1- 42" 11° Bend (TV)(1)
1- 42" 1/32 Bend (TV)(2)
1- Conc. Blk.

Sta. 12+75 W.L. = ⊕ 29+91.89 (o/s 15' Lt.)
1- 42" 11° Bend (BV)(1)
1- 42" 1/32 Bend (BV)(2)
1- Conc. Blk.

Sta. 12+58 W.L. = ⊕ 29+74.68 (o/s 15' Lt.)
1- 42" 11° Bend (TV)(1)
1- 42" 1/32 Bend (TV)(2)
1- Conc. Blk.

Sta. 12+90 W.L. = ⊕ 30+07.09 (o/s 15' Lt.)
1- 42" 11° Bend (BV)(1)
1- 42" 1/32 Bend (BV)(2)
1- Conc. Blk.

Sta. 13+10 W.L. = ⊕ 31+27.34 (o/s 15' Lt.)
1- 42" 11° Bend (TV)(1)
1- 42" 1/32 Bend (TV)(2)
1- Conc. Blk.

Sta. 14+30 W.L. = ⊕ 31+48.86 (o/s 15' Lt.)
1- 42" 11° Bend (BV)(1)
1- 42" 1/32 Bend (BV)(2)
1- Conc. Blk.

Sta. 14+53 W.L. = ⊕ 31+72.15 (o/s 15' Lt.)
1- 42" 11° Bend (TV)(1)
1- 42" 1/32 Bend (TV)(2)
1- Conc. Blk.

Sta. 13+97 W.L. = ⊕ 31+15.44 (o/s 15' Lt.)
1- 42" 11° Bend (TV)(1)
1- 42" 1/32 Bend (TV)(2)
1- Conc. Blk.

Sta. 14+15 W.L. = ⊕ 31+33.67 (o/s 15' Lt.)
1- 42" 11° Bend (BV)(1)
1- 42" 1/32 Bend (BV)(2)
1- Conc. Blk.

Sta. 15+32 W.L. = ⊕ 32+52.15 (o/s 15' Lt.)
1- 42" 11° Bend (TV)(1)
1- 42" 1/32 Bend (TV)(2)
1- Conc. Blk.

Sta. 15+52 W.L. = ⊕ 32+72.41(o/s 15' Lt.)
1- 42" 11° Bend (BV)(1)
1- 42" 1/32 Bend (BV)(2)
1- Conc. Blk.

Sta. 15+67 W.L. = ⊕ 32+87.58 (o/s 15' Lt.)
1- 42" 11° Bend (BV)(1)
1- 42" 1/32 Bend (BV)(2)
1- Conc. Blk.

Sta. 15+87 W.L. = ⊕ 33+07.85 (o/s 15' Lt.)
1- 42" 11° Bend (TV)(1)
1- 42" 1/32 Bend (TV)(2)
1- Conc. Blk.

Sta. 16+60 W.L. = ⊕ 33+81.78 (o/s 15' Lt.)
1- 42" 11° Bend (TV)(1)
1- 42" 1/32 Bend (TV)(2)
1- Conc. Blk.

Sta. 16+85 W.L. = ⊕ 34+07 (o/s 15' Lt.)
1- 42" 11° Bend (BV)(1)
1- 42" 1/32 Bend (BV)(2)
1- Conc. Blk.

Sta. 17+30 W.L. = ⊕ 34+52 (o/s 15' Lt.)
1- 42" 11° Bend (BV)(1)
1- 42" 1/32 Bend (BV)(2)
1- Conc. Blk.

Sta. 17+45 W.L. = ⊕ 34+67 (o/s 15' Lt.)
1- 42" 11° Bend (TV)(1)
1- 42" 1/32 Bend (TV)(2)
1- Conc. Blk.

Sta. 18+00 W.L. = ⊕ 35+15.10 (o/s 15' Lt.)
1- 42" 11° Bend (TV)(1)
1- 42" 1/32 Bend (TV)(2)
1- Conc. Blk.

Sta. 18+30 W.L. = ⊕ 35+45.10 (o/s 15' Lt.)
1- 42" 11° Bend (BV)(1)
1- 42" 1/32 Bend (BV)(2)
1- Conc. Blk.

Sta. 18+50 W.L. = ⊕ 35+65.10 (o/s 15' Lt.)
1- 42" 11° Bend (BV)(1)
1- 42" 1/32 Bend (BV)(2)
1- Conc. Blk.

Sta. 19+10 W.L. = ⊕ 36+25.10 (o/s 15' Lt.)
1- 42" 10° Bend (TV)(1)
1- 42" 1/32 Bend (TV)(2)
1- Conc. Blk.

Note: For New Drain Line, See Plan on Sheet D10 and D11.

Legend:
(1) Concrete Cylinder Pipe Alternate (Cl. 150)
(2) Ductile Iron Pipe Alternate (Cl. 52)

| NEW ⊕ CURVE DATA |
|---|
| Δ= 36° 47' 30" |
| Δ/2= 18° 23' 45" |
| R= 1200.00 |
| T= 399.09 |
| C= 757.39 |
| Lc= 770.56 |

| ℄ 42" WATER CURVE DATA |
|---|
| Δ= 36° 47' 30" |
| Δ/2= 18° 23' 45" |
| R= 1185.00 |
| T= 394.10 |
| C= 747.93 |
| Lc= 760.93 |

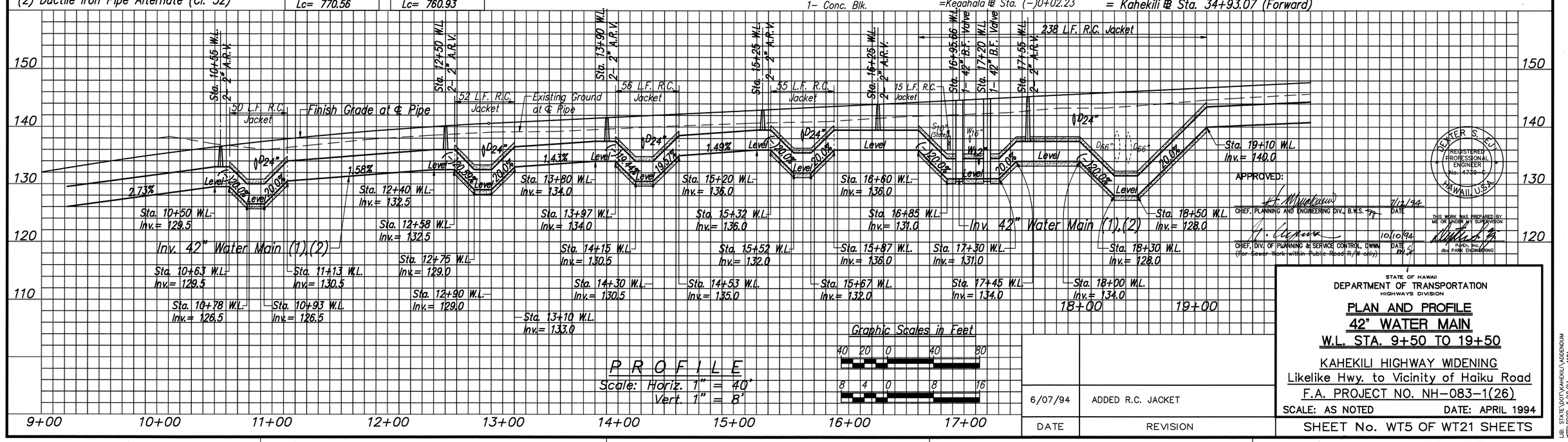


| DATE | REVISION |
|---|---|
| 6/07/94 | ADDED R.C. JACKET |

APPROVED:

CHIEF, PLANNING AND ENGINEERING DIV., B.W.S. — DATE 7/12/94

CHIEF, DIV. OF PLANNING & SERVICE CONTROL, DWWM (For Sewer Work within Public Road R/W only) — DATE 10/10/94

THIS WORK WAS PREPARED BY ME OR UNDER MY SUPERVISION — Park, Inc. dba PARK ENGINEERING

JENKER S. EU — REGISTERED PROFESSIONAL ENGINEER No. 4736-C — HAWAII, U.S.A.

STATE OF HAWAII
DEPARTMENT OF TRANSPORTATION
HIGHWAYS DIVISION

**PLAN AND PROFILE**
**42" WATER MAIN**
**W.L. STA. 9+50 TO 19+50**

KAHEKILI HIGHWAY WIDENING
Likelike Hwy. to Vicinity of Haiku Road
F.A. PROJECT NO. NH-083-1(26)

SCALE: AS NOTED — DATE: APRIL 1994

SHEET No. WT5 OF WT21 SHEETS

AS-BUILT ADD. 97

SURVEY PLOTTED BY
DRAWN BY
TRACED BY
DESIGNED BY
QUANTITIES BY
CHECKED BY
DATE
ORIGINAL PLAN
NOTEBOOK No.

ROTATED: 112° 41'
BASE PT. 0,0

LIB: STATE\DOT\KAHEKILI\ADDENDUM WTPLPROR 5/18/94 AHM

| FED. ROAD DIS. NO. | STATE | FED. AID PROJ. NO. | FISCAL YEAR | SHEET NO. | TOTAL SHEETS |
|---|---|---|---|---|---|
| HAWAII | HAW. | NH-083-1(26) | 1994 | ADD. 98 R | 238 |

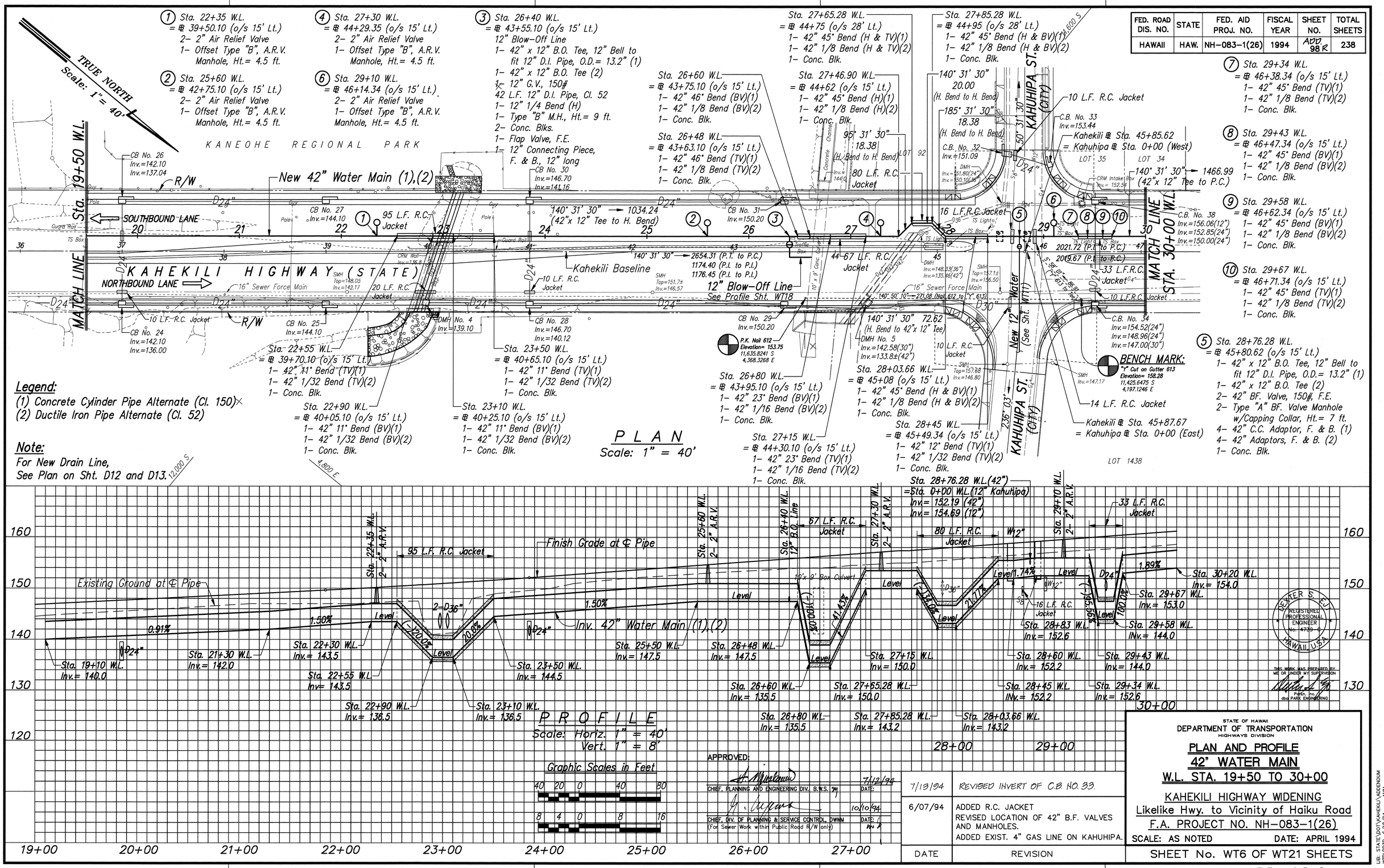

| FED. ROAD DIS. NO. | STATE | FED. AID PROJ. NO. | FISCAL YEAR | SHEET NO. | TOTAL SHEETS |
|---|---|---|---|---|---|
| HAWAII | HAW. | NH-083-1(26) | 1994 | ADD. 99 | 238 |

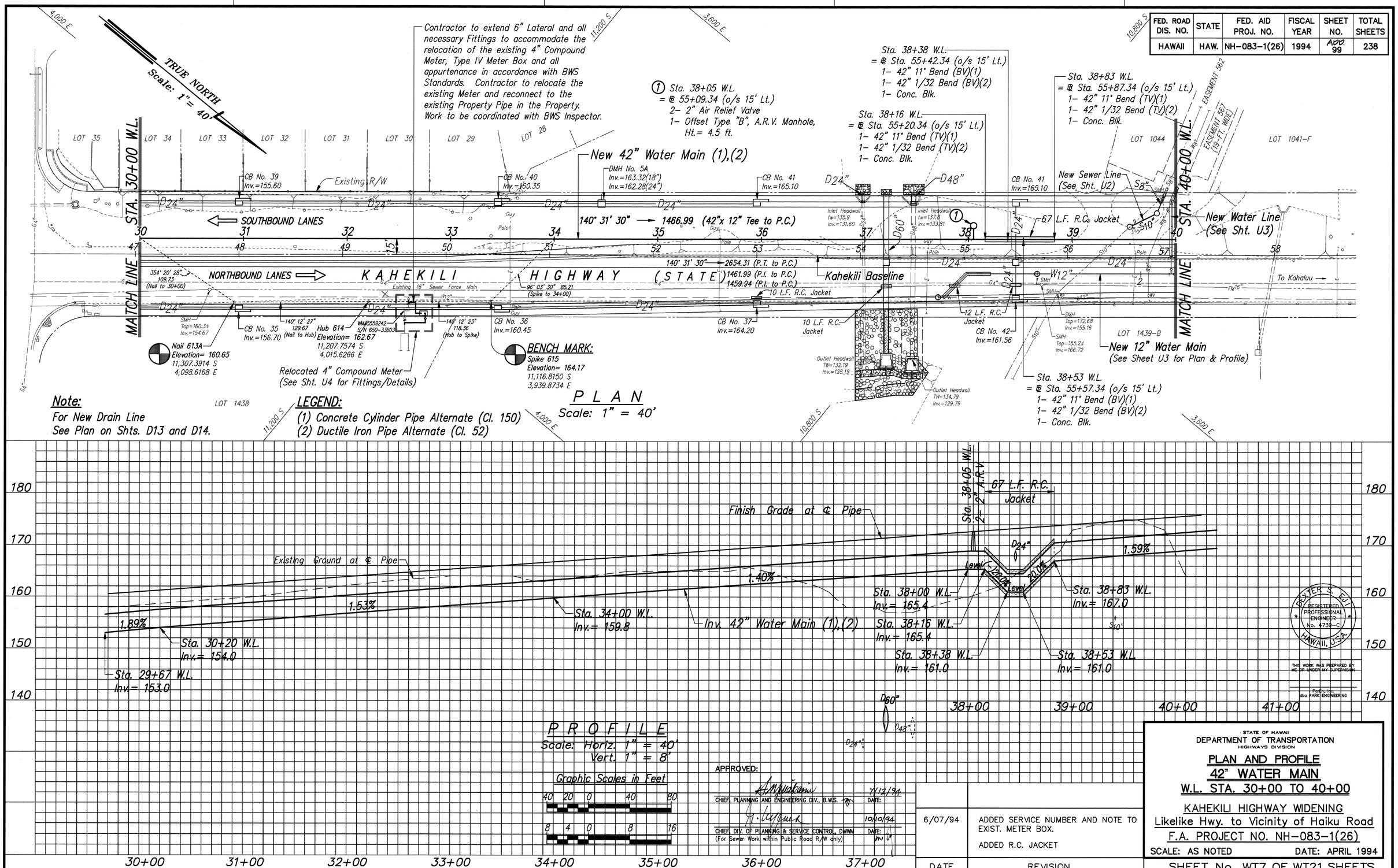

| FED. ROAD DIS. NO. | STATE | FED. AID PROJ. NO. | FISCAL YEAR | SHEET NO. | TOTAL SHEETS |
|---|---|---|---|---|---|
| HAWAII | HAW. | NH-083-1(26) | 1994 | ADD. 100 | 238 |

| ℄ 42" WATER CURVE DATA |
|---|
| Δ= 5° 39' 14" |
| Δ/2= 2° 49' 37" |
| R= 3615.00 |
| T= 178.51 |
| C= 356.58 |
| Lc= 356.73 |

| ℄ CURVE DATA | ① | ② | ③ |
|---|---|---|---|
| Δ | 8° 54' 30" | 4° 28' 48" | 4° 25' 42" |
| Δ/2 | 4° 27' 15" | 2° 14' 24" | 2° 12' 51" |
| R | 3600.00 | 3600.00 | 3600.00 |
| T | 280.43 | 140.82 | 139.19 |
| C | 559.16 | 281.42 | 278.17 |
| Lc | 559.73 | 281.49 | 278.24 |

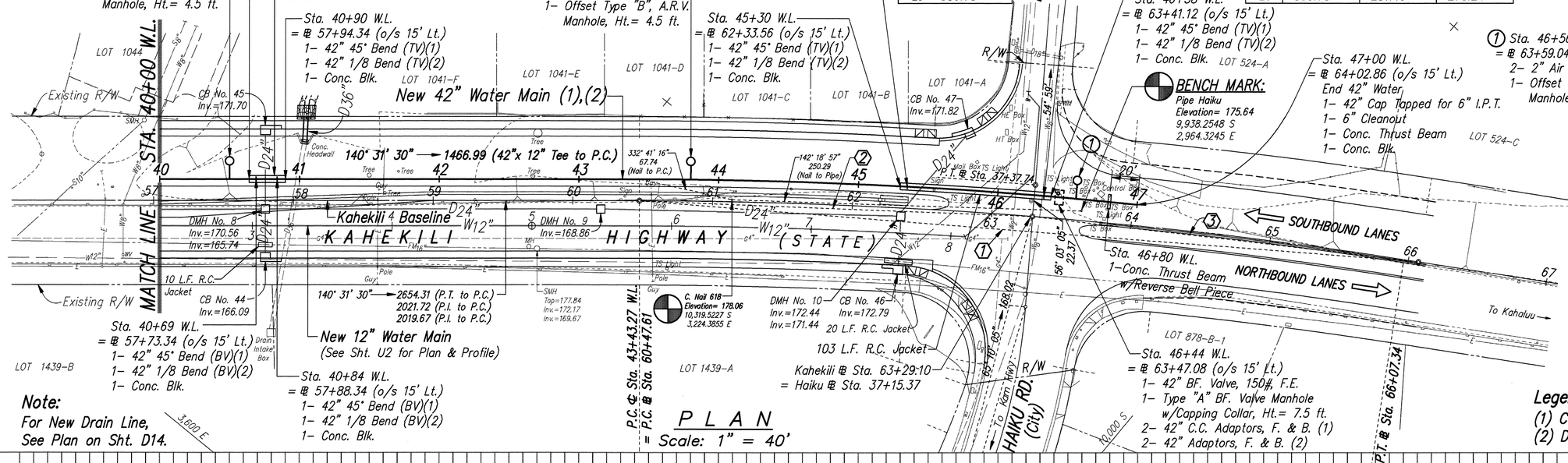


## Note:

For New Drain Line, See Plan on Sht. D14.

## Legend:

(1) Concrete Cylinder Pipe Alternate (Cl. 150)
(2) Ductile Iron Pipe Alternate (Cl. 52)

## P L A N

Scale: 1" = 40'

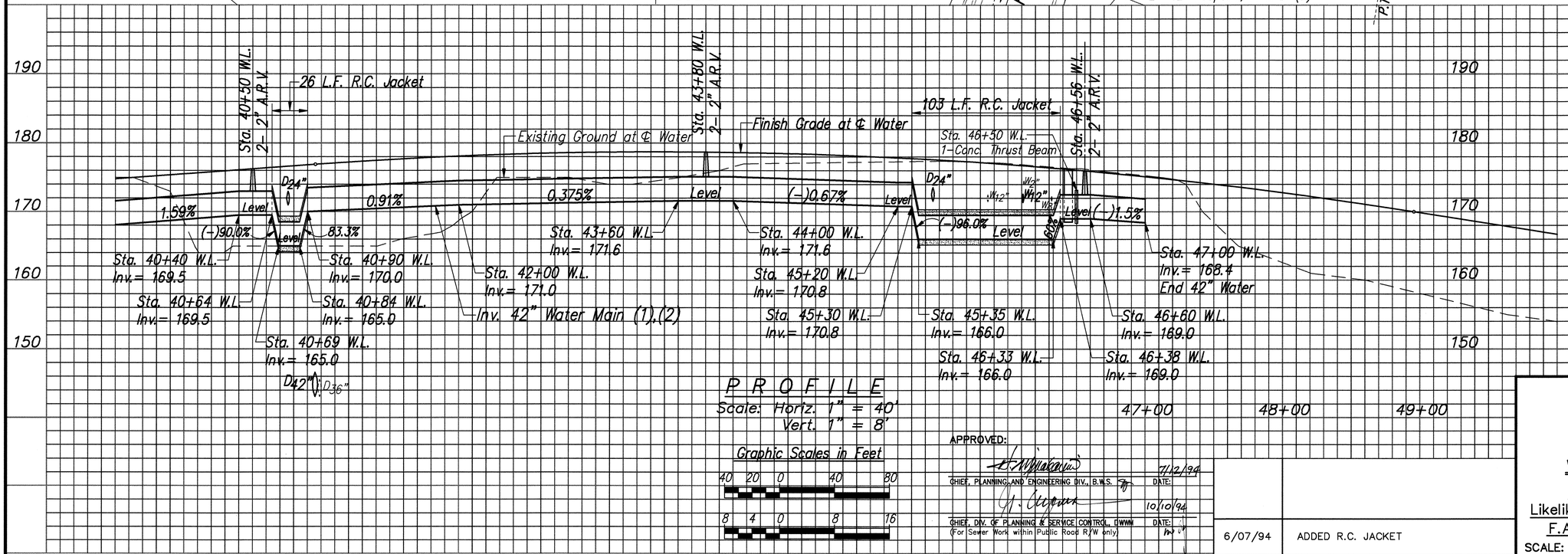


## P R O F I L E

Scale: Horiz. 1" = 40'
Vert. 1" = 8'

Graphic Scales in Feet

40 20 0 40 80

8 4 0 8 16

APPROVED:

CHIEF, PLANNING AND ENGINEERING DIV., B.W.S. — DATE: 7/12/94

CHIEF, DIV. OF PLANNING & SERVICE CONTROL, DWWM (For Sewer Work within Public Road R/W only) — DATE: 10/10/94

| DATE | REVISION |
|---|---|
| 6/07/94 | ADDED R.C. JACKET |

DENTER S. PARK
REGISTERED PROFESSIONAL ENGINEER
No. 4739-C
HAWAII, U.S.A.

THIS WORK WAS PREPARED BY ME OR UNDER MY SUPERVISION
Parks, Inc.
dba PARK ENGINEERING

STATE OF HAWAII
DEPARTMENT OF TRANSPORTATION
HIGHWAYS DIVISION

# PLAN AND PROFILE
# 42" WATER MAIN
## W.L. STA. 40+00 to 47+00

KAHEKILI HIGHWAY WIDENING
Likelike Hwy. to Vicinity of Haiku Road
F.A. PROJECT NO. NH-083-1(26)

SCALE: AS NOTED — DATE: APRIL 1994

SHEET No. WT8 OF WT21 SHEETS

AS-BUILT ADD. 100

SURVEY PLOTTED BY
SHOWN BY
TRACED BY
DESIGNED BY
QUANTITIES BY
CHECKED BY
DATE
ORIGINAL PLAN
NOTEBOOK
No.

ROTATED: 129° 28' 30"
BASE PT. 0,0

LIB: STATE\DOT\KAHEKILI\ADDENDUM
WTPLPRSR 6/18/94 AMM

| FED. ROAD DIS. NO. | STATE | FED. AID PROJ. NO. | FISCAL YEAR | SHEET NO. | TOTAL SHEETS |
|---|---|---|---|---|---|
| HAWAII | HAW. | NH-083-1(26) | 1994 | ADD. 101 | 238 |

(1) @ Sta. 5+96 (Kulukeoe)
(o/s 12.5'± Lt.)
= Sta. 0+00 W.L. "A"
& (2) @ Sta. 5+71 (Kulukeoe)
(o/s 12.5'± Lt.)
= Sta. 0+00 W.L. "B"
Conn. to Exist. 24" Water
Materials for Connection
(See Schematic this sheet)
2-24"x 24" C.C. Tee(1)
2-24"x 24" C.C. Tee, 24"
Outlet to fit 24" D.I. Pipe
O.D.=25.80"(2)
4-24" Buttstrap
2-24" Buttstrap(1)
2-24" Sleeve 15" long(2)
2-8 L.F. 24" Pipe(1)(2)
4-10 L.F. 24" Conc. Cylinder Pipe
2-Conc. Blk. w/Structural Struts
Temp. For Testing:
2-24" Cap Tapped for 6" IPT
2-6" Cleanout
2-Conc. Blk.

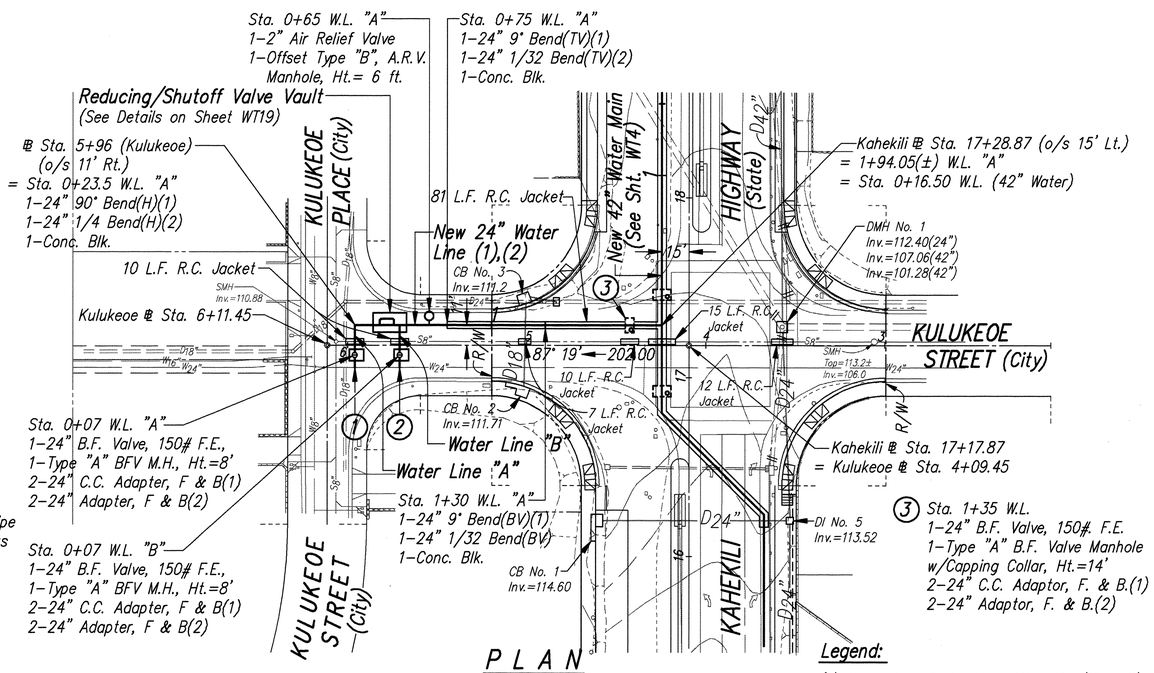


PLAN
Scale: 1" = 40'

Legend:
(1) Concrete Cylinder Pipe Alternate (Cl. 150)
(2) Ductile Iron Pipe Alternate (Cl. 52)

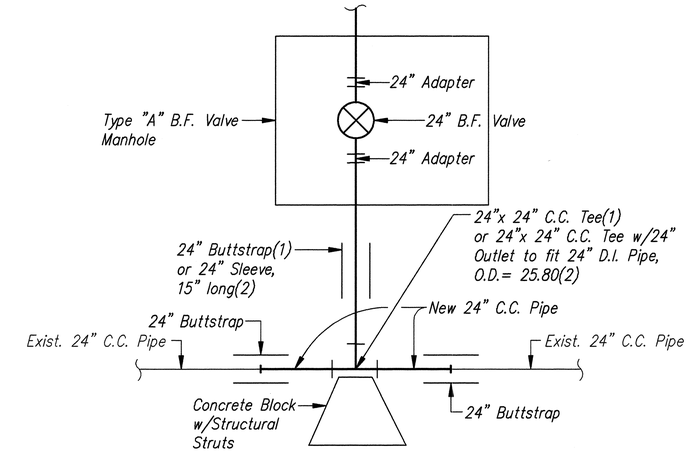


SCHEMATIC LAY-OUT STA. 0+00 W.L. "A" & "B"
Not to Scale

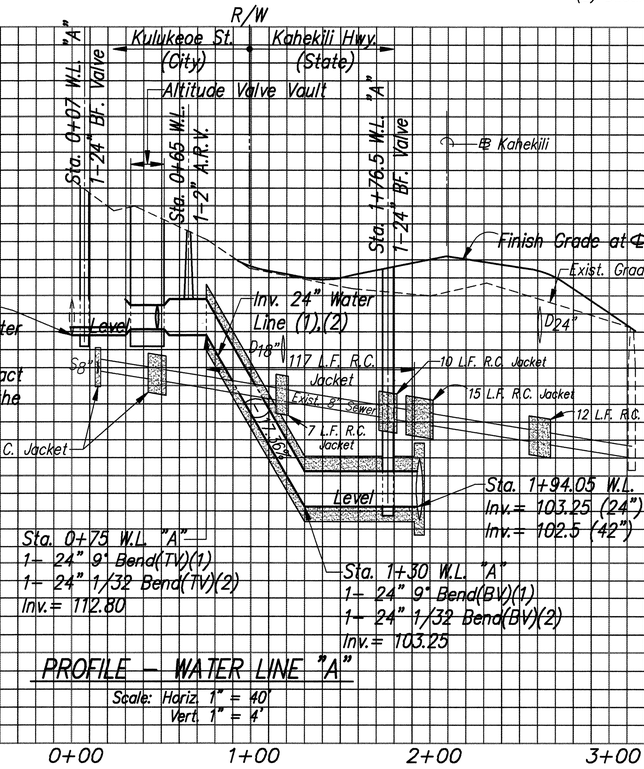


PROFILE - WATER LINE "A"
Scale: Horiz. 1" = 40'
Vert. 1" = 4'

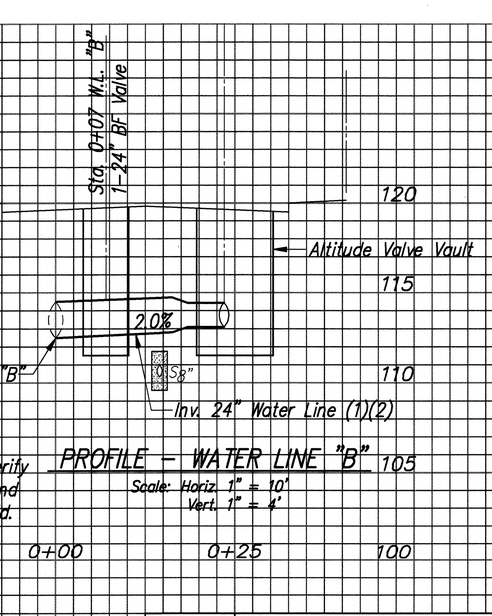


PROFILE - WATER LINE "B"
Scale: Horiz. 1" = 10'
Vert. 1" = 4'

Graphic Scales in Feet
40 20 0 40 80
4 2 0 4 8

APPROVED:

| | |
|---|---|
| CHIEF, PLANNING & ENGINEERING DIV., B.W.S. | DATE 7/12/94 |
| CHIEF, DIV. OF PLANNING & SERVICE CONTROL, DWWM (For Sewer Work within Public Road R/W only) | DATE 10/10/94 |
| CHIEF, DIVISION OF ENGINEERING, D.P.W. (For Construction within City R/W only) | DATE 10/4/94 |
| CHIEF, DIVISION OF TRAFFIC ENGINEERING, D.T.S. (For Construction within R/W only) | DATE 9/26/94 |

REGISTERED PROFESSIONAL ENGINEER No. 4739-C HAWAII, U.S.A.

THIS WORK WAS PREPARED BY ME OR UNDER MY SUPERVISION

Parsons, Inc.
dba PARK ENGINEERING

| DATE | REVISION |
|---|---|
| 6/07/94 | ADDED DEPT. OF TRANS. SERVICES SIGNATURE BLOCK. REVISED TYPE "B" MANHOLE TO OFFSET TYPE A.R.V. MANHOLE. ADDED R.C. JACKETS. |

STATE OF HAWAII
DEPARTMENT OF TRANSPORTATION
HIGHWAYS DIVISION

# PLAN AND PROFILE
# KULUKEOE STREET
# 24" W.L. CONN. TO 42" WATER MAIN

KAHEKILI HIGHWAY WIDENING
Likelike Hwy. to Vicinity of Haiku Road
F.A. PROJECT NO. NH-083-1(26)

SCALE: AS NOTED DATE: APRIL 1994

SHEET No. WT9 OF WT21 SHEETS

AS-BUILT ADD. 101

SURVEY PLOTTED BY
DRAWN BY
TRACED BY
DESIGNED BY
QUANTITIES BY
CHECKED BY
DATE
ORIGINAL PLAN
INDEX
NOTEBOOK
No.

ROTATED: 2° 41'
BASE PT. 0.0

LIB: STATE\DOT\KAHEKILI\ADDENDUM
WTPLPROR 6/06/94
AMM

| FED. ROAD DIS. NO. | STATE | FED. AID PROJ. NO. | FISCAL YEAR | SHEET NO. | TOTAL SHEETS |
|---|---|---|---|---|---|
| HAWAII | HAW. | NH-083-1(26) | 1994 | 102 | 238 |

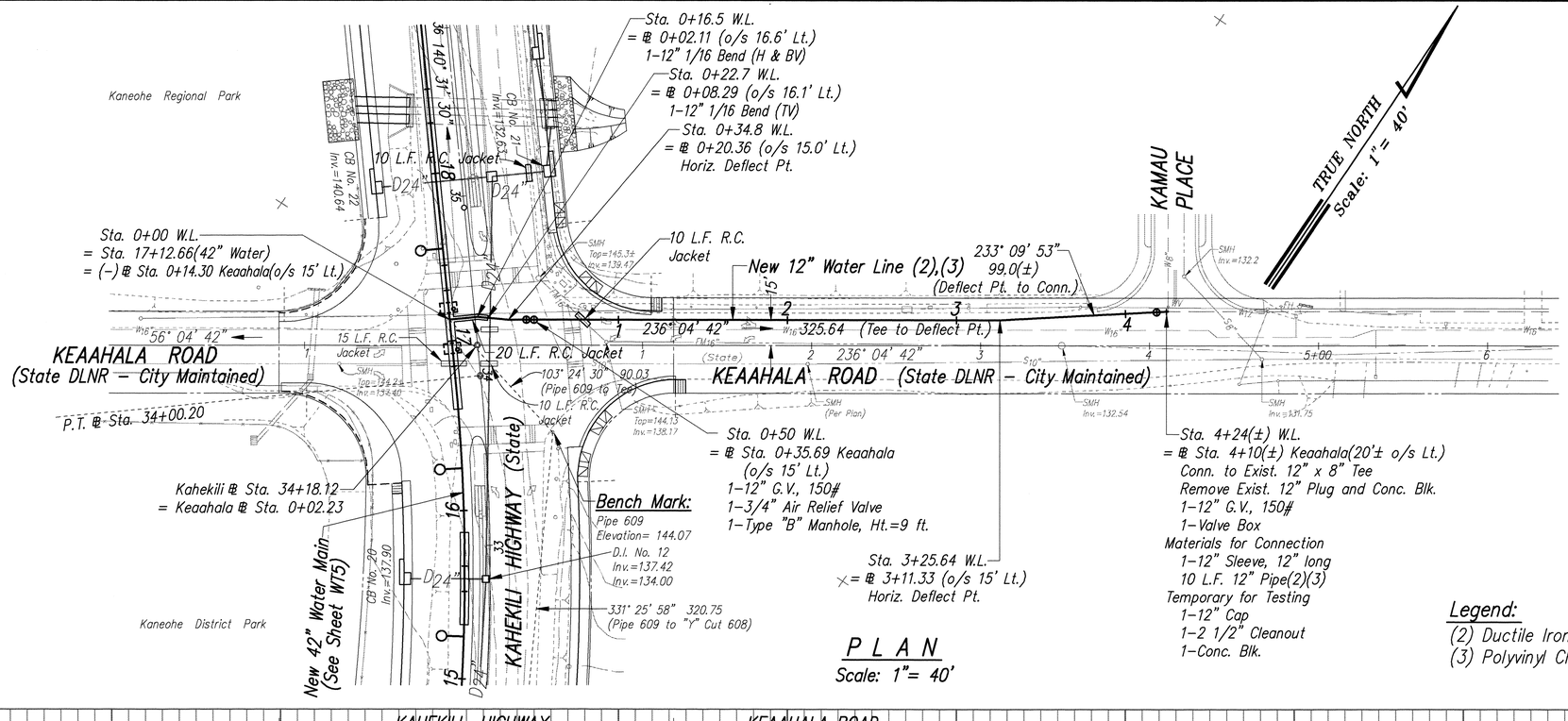


## PLAN
Scale: 1"= 40'

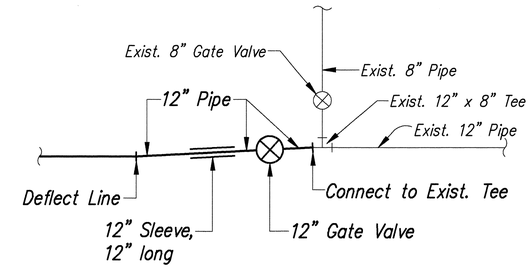


## SCHEMATIC LAYOUT – STA. 4+24(±) W.L.
Not to Scale

**Legend:**
(2) Ductile Iron Pipe Alternate (Cl. 52)
(3) Polyvinyl Chloride Pipe Alternate (Cl. 150)

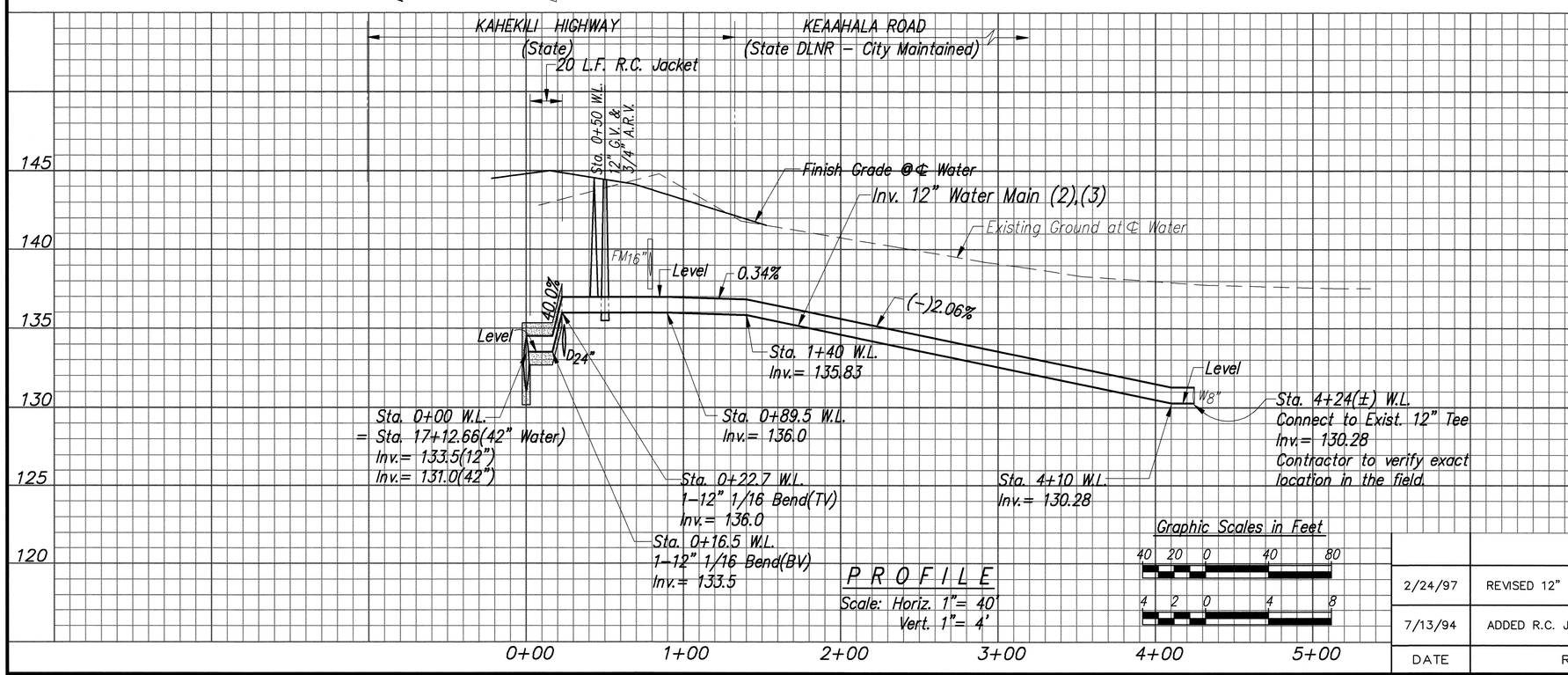


## PROFILE
Scale: Horiz. 1"= 40'
Vert. 1"= 4'

Graphic Scales in Feet
40 20 0 40 80
4 2 0 4 8

APPROVED:

CHIEF, PLANNING AND ENGINEERING DIVISION, B.W.S. DATE

CHIEF, DIV. OF PLANNING & SERVICE CONTROL, DWWM DATE
(For Sewer Work within Public Road R/W only)

CHIEF, DIVISION OF ENGINEERING, D.P.W. DATE
(For Construction within State DLNR-City Maintained R/W only)

CHIEF, DIVISION OF TRAFFIC ENGINEERING, D.T.S. DATE
(For Construction within City R.O.W. only)

ROY M. MIKAMI
LICENSED PROFESSIONAL ENGINEER
NO. 1595-C
HAWAII, U.S.A.

THIS WORK WAS PREPARED BY ME OR UNDER MY SUPERVISION
POEN, INC.
dba PARK ENGINEERING

DEXTER S. EJI
REGISTERED PROFESSIONAL ENGINEER
No. 4739-C
HAWAII, U.S.A.

THIS WORK WAS PREPARED BY ME OR UNDER MY SUPERVISION
POEN, INC.
dba PARK ENGINEERING
** SIGNATURE HAS BEEN DIGITIZED

| DATE | REVISION |
|---|---|
| 2/24/97 | REVISED 12" W.L. ON KEAAHALA ROAD. |
| 7/13/94 | ADDED R.C. JACKET |

STATE OF HAWAII
DEPARTMENT OF TRANSPORTATION
HIGHWAYS DIVISION

# PLAN AND PROFILE
# KEAAHALA ROAD
## 12" W.L. CONN. TO 42" WATER MAIN

KAHEKILI HIGHWAY WIDENING
Likelike Hwy. to Vicinity of Haiku Road
F.A. PROJECT NO. NH-083-1(26)

SCALE: AS NOTED DATE: APRIL 1994

SHEET No. WT10 OF WT21 SHEETS

**AS-BUILT** C.O. 102 R

SURVEY PLOTTED BY ____ DATE ____
DRAWN BY ____
TRACED BY ____
DESIGNED BY ____
QUANTITIES BY ____
CHECKED BY ____
ORIGINAL PLAN
NOTEBOOK
No.

ROTATED: 33° 55' 18"
BASE PT: 0,0

LIB: STATE\DOT\KAHEKILI\ADDENDUM
WTP:PTRC 2/24/97 AMM KSI

| FED. ROAD DIS. NO. | STATE | FED. AID PROJ. NO. | FISCAL YEAR | SHEET NO. | TOTAL SHEETS |
|---|---|---|---|---|---|
| HAWAII | HAW. | NH-083-1(26) | 1994 | 103 R | 238 |

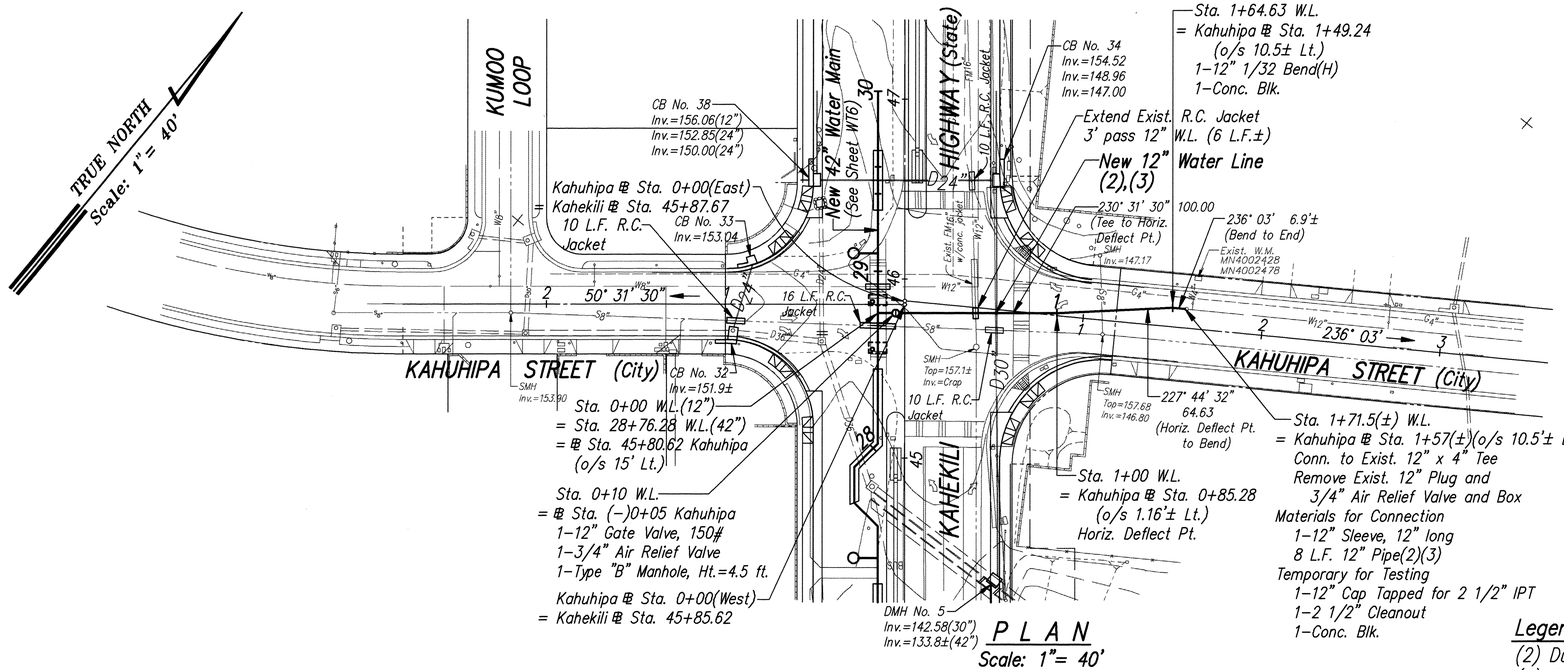


## PLAN
Scale: 1"= 40'

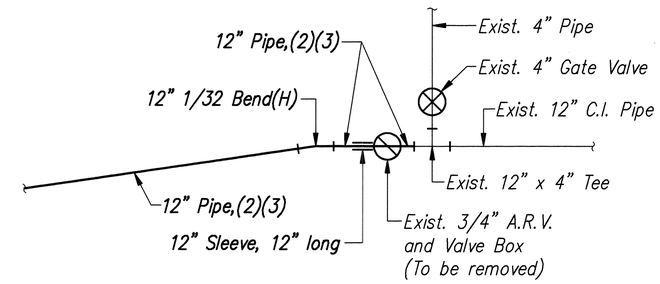


## SCHEMATIC LAYOUT – STA. 1+71.5(±) W.L.
Not to Scale

**Legend:**
(2) Ductile Iron Pipe Alternate (Cl. 52)
(3) Polyvinyl Chloride Pipe Alternate (Cl. 150)

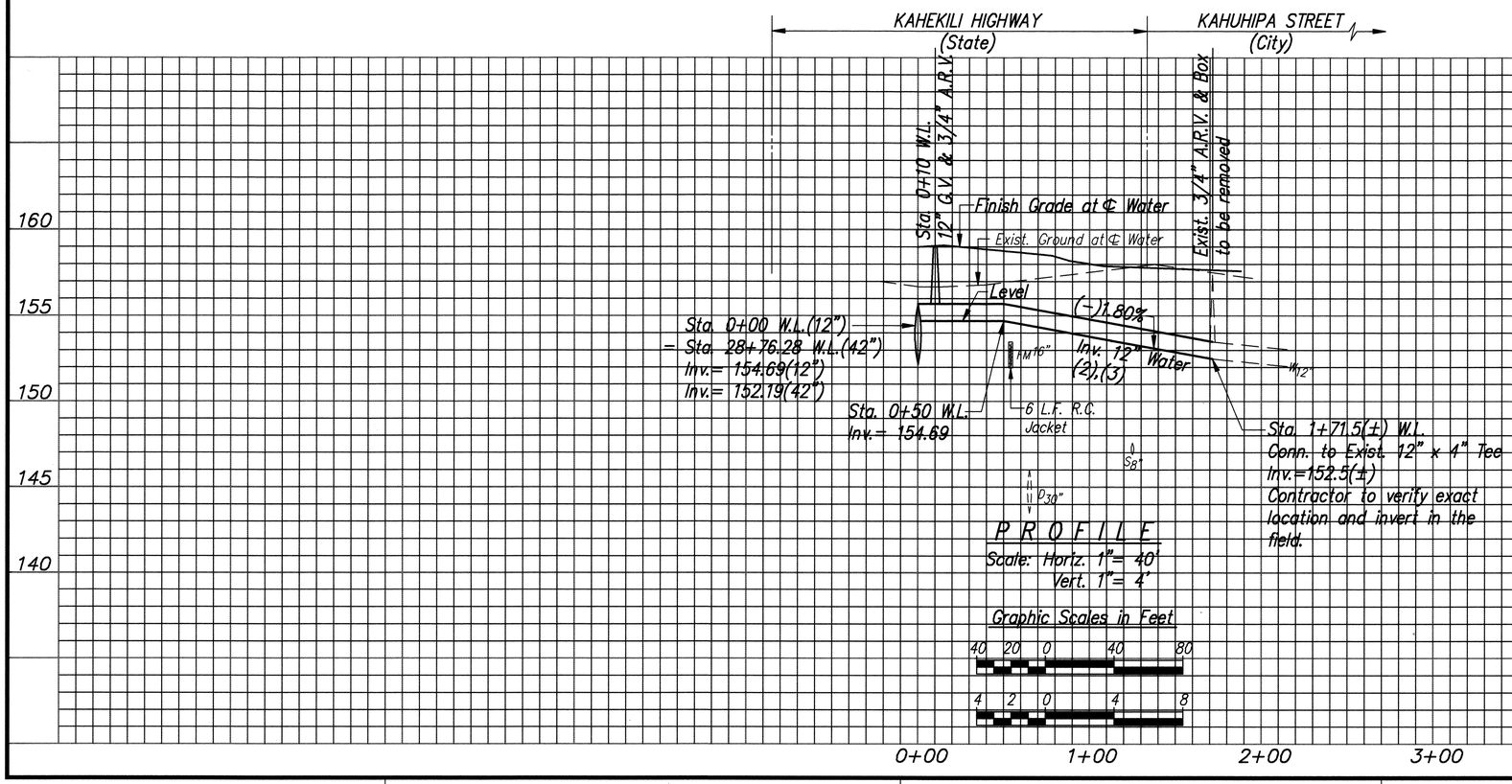


## PROFILE
Scale: Horiz. 1"= 40'
Vert. 1"= 4'

Graphic Scales in Feet
40 20 0 40 80
4 2 0 4 8

APPROVED:

7/12/94
CHIEF, PLANNING AND ENGINEERING DIVISION, B.W.S. — DATE

10/10/94
CHIEF, DIV. OF PLANNING & SERVICE CONTROL, DWWM (For Sewer Work within Public Road R/W only) — DATE

6/4/94
CHIEF, DIVISION OF ENGINEERING, D.P.W. (For Construction within City R/O.W. only) — DATE

9/28/94
CHIEF, DIVISION OF TRAFFIC ENGINEERING, D.T.S. (For Construction within City R/O.W. only) — DATE

REGISTERED PROFESSIONAL ENGINEER No. 4739-C HAWAII, U.S.A.

THIS WORK WAS PREPARED BY ME OR UNDER MY SUPERVISION
PaRK, Inc. dba PARK ENGINEERING

| DATE | REVISION |
|---|---|
| 7/13/94 | REVISED LOCATION OF 42" B.F. VALVES AND MANHOLES. ADDED R.C. JACKET |

STATE OF HAWAII
DEPARTMENT OF TRANSPORTATION
HIGHWAYS DIVISION

**PLAN AND PROFILE**
**KAHUHIPA STREET**
**12" W.L. CONN. TO 42" WATER MAIN**

KAHEKILI HIGHWAY WIDENING
Likelike Hwy. to Vicinity of Haiku Road
F.A. PROJECT NO. NH-083-1(26)

SCALE: AS NOTED — DATE: APRIL 1994

SHEET No. WT11 OF WT21 SHEETS

AS-BUILT 103 R

SURVEY PLOTTED BY ____ DATE
DRAWN BY ____
TRACED BY ____
DESIGNED BY ____
QUANTITIES BY ____
CHECKED BY ____

ORIGINAL PLAN
NOTEBOOK No. ____

ROTATED: 39° 28' 30"
BASE PT. 0.0

LIB: STATE\DOT\K-KAHEKILI\ADDENDUM
WTP-LPR8R 7/13/94 AMM

J: \36165\CAD\6165CP2.DWG

| FED. ROAD DIS. NO. | STATE | FED. AID PROJ. NO. | FISCAL YEAR | SHEET NO. | TOTAL SHEETS |
|---|---|---|---|---|---|
| HAWAII | HAW. | NH-083-1(26) | 1994 | ADD. 104 | 238 |

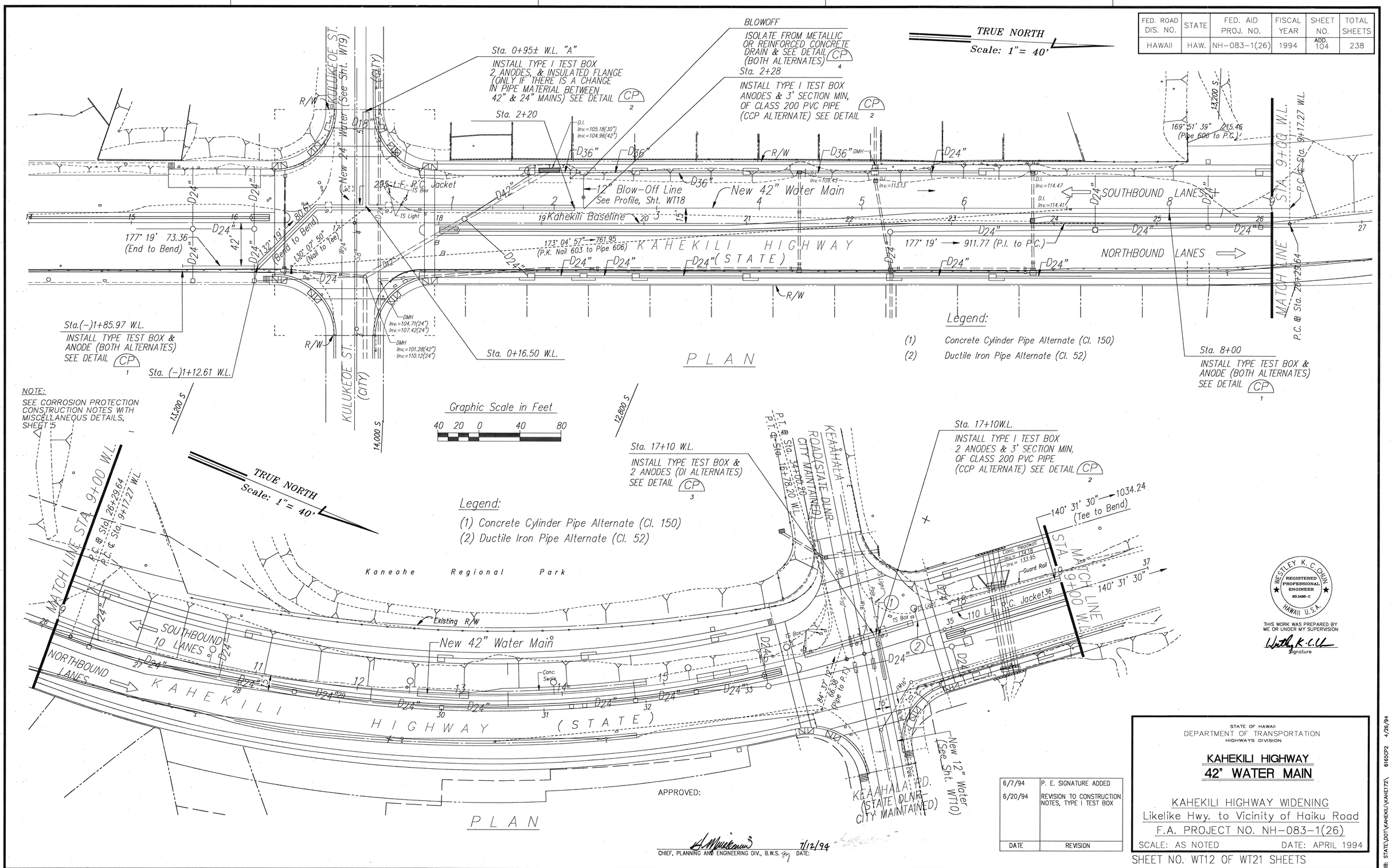


| DATE | REVISION |
|---|---|
| 6/7/94 | P. E. SIGNATURE ADDED |
| 6/20/94 | REVISION TO CONSTRUCTION NOTES, TYPE I TEST BOX |

WESTLEY K. C. CHUN
REGISTERED PROFESSIONAL ENGINEER
80.5499-C
HAWAII U.S.A.

THIS WORK WAS PREPARED BY ME OR UNDER MY SUPERVISION

Signature

APPROVED:

CHIEF, PLANNING AND ENGINEERING DIV., B.W.S. DATE: 7/12/94

STATE OF HAWAII
DEPARTMENT OF TRANSPORTATION
HIGHWAYS DIVISION

**KAHEKILI HIGHWAY**
**42" WATER MAIN**

KAHEKILI HIGHWAY WIDENING
Likelike Hwy. to Vicinity of Haiku Road
F.A. PROJECT NO. NH-083-1(26)

SCALE: AS NOTED DATE: APRIL 1994

SHEET NO. WT12 OF WT21 SHEETS

ORIGINAL PLAN | NOTEBOOK | No.
SURVEY PLOTTED BY | DRAWN BY | TRACED BY | DESIGNED BY | QUANTITIES BY | CHECKED BY | DATE

ROTATED:
BASE PT.:

LIB: STATE\DOT\KAHEKILI\KAHE172\ 6165CP2 4/26/94

**AS-BUILT** ADD.104

J:\36165\CAD\6165CP3.DWG

| FED. ROAD DIS. NO. | STATE | FED. AID PROJ. NO. | FISCAL YEAR | SHEET NO. | TOTAL SHEETS |
|---|---|---|---|---|---|
| HAWAII | HAW. | NH-083-1(26) | 1994 | ADD. 105 | 238 |

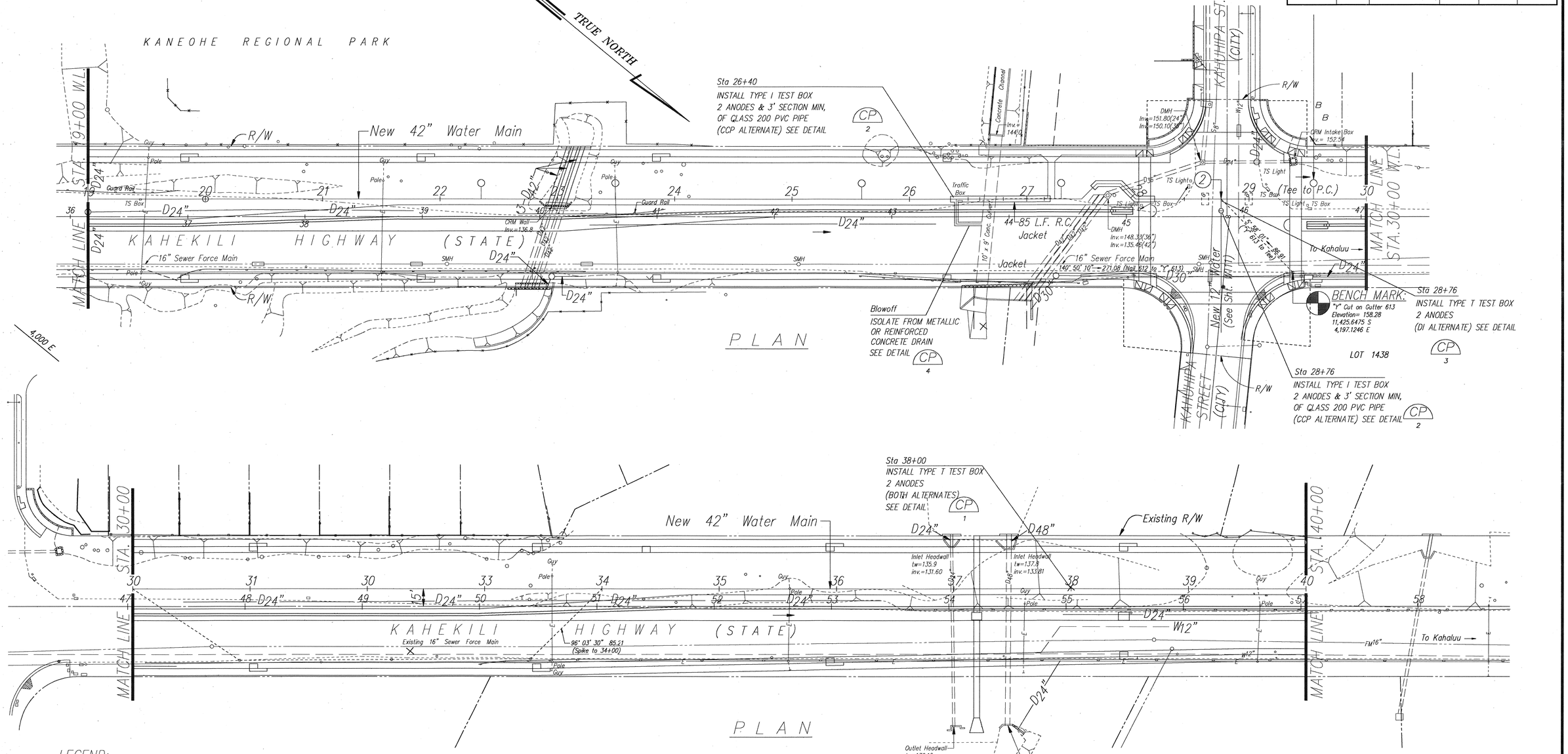





LEGEND:
(1) Concrete Cylinder Pipe Alternate (Cl. 150)
(2) Ductile Iron Pipe Alternate (Cl. 52)

Graphic Scale in Feet
40 20 0 40 80

WESTLEY K.C. CHUN
REGISTERED PROFESSIONAL ENGINEER
NO.5496-C
HAWAII U.S.A.

THIS WORK WAS PREPARED BY ME OR UNDER MY SUPERVISION
Signature

APPROVED:
CHIEF, PLANNING AND ENGINEERING DIV., B.W.S. DATE: 7/12/94

| DATE | REVISION |
|---|---|
| 6/7/94 | P. E. SIGNATURE ADDED |
| 6/20/94 | REVISION TO CONSTRUCTION NOTES, TYPE I TEST BOX |

STATE OF HAWAII
DEPARTMENT OF TRANSPORTATION
HIGHWAYS DIVISION

**KAHEKILI HIGHWAY**
**42" WATER MAIN**

KAHEKILI HIGHWAY WIDENING
Likelike Hwy. to Vicinity of Haiku Road
F.A. PROJECT NO. NH-083-1(26)

SCALE: AS NOTED DATE: APRIL 1994

SHEET NO. WT13 OF WT21 SHEETS

SURVEY PLOTTED BY
DRAWN BY
TRACED BY
DESIGNED BY
QUANTITIES BY
CHECKED BY
DATE
ORIGINAL PLAN
NOTEBOOK
No.

ROTATED: BASE PT.

LIB: STATE\DOT\KAHEKILI\KAHE172\ 6165CP3

AS-BUILT ADD.105

J:\36165\CAD\6165CP4.DWG

| FED. ROAD DIS. NO. | STATE | FED. AID PROJ. NO. | FISCAL YEAR | SHEET NO. | TOTAL SHEETS |
|---|---|---|---|---|---|
| HAWAII | HAW. | NH-083-1(26) | 1994 | ADD. 106 | 238 |

Legend:
(1) Concrete Cylinder Pipe Alternate (Cl. 150)
(2) Ductile Iron Pipe Alternate (Cl. 52)

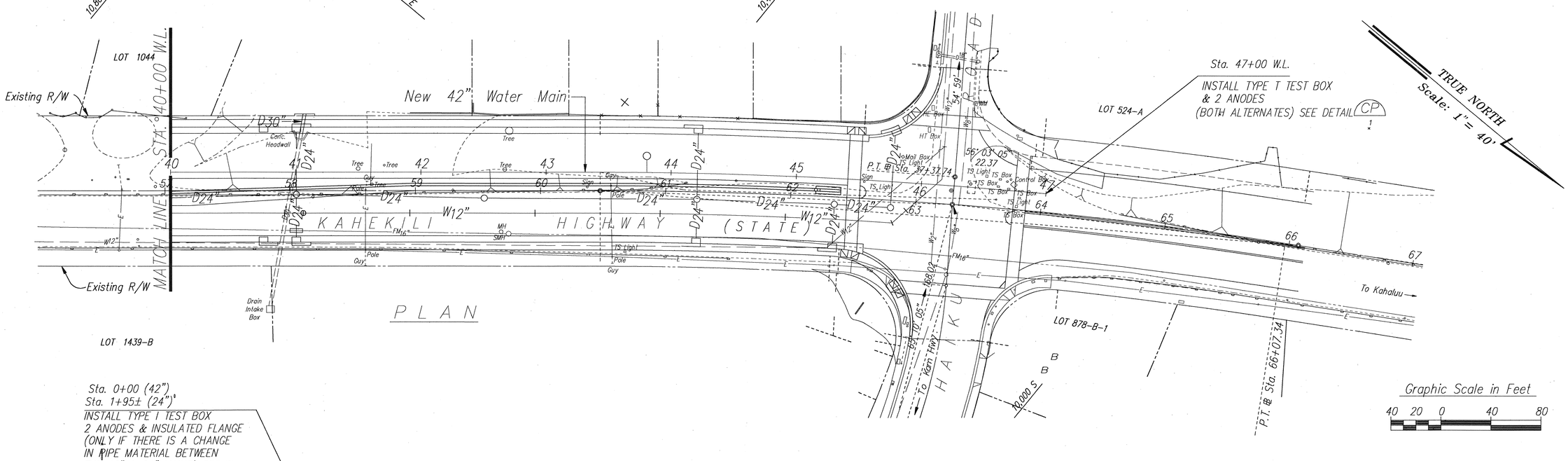


PLAN

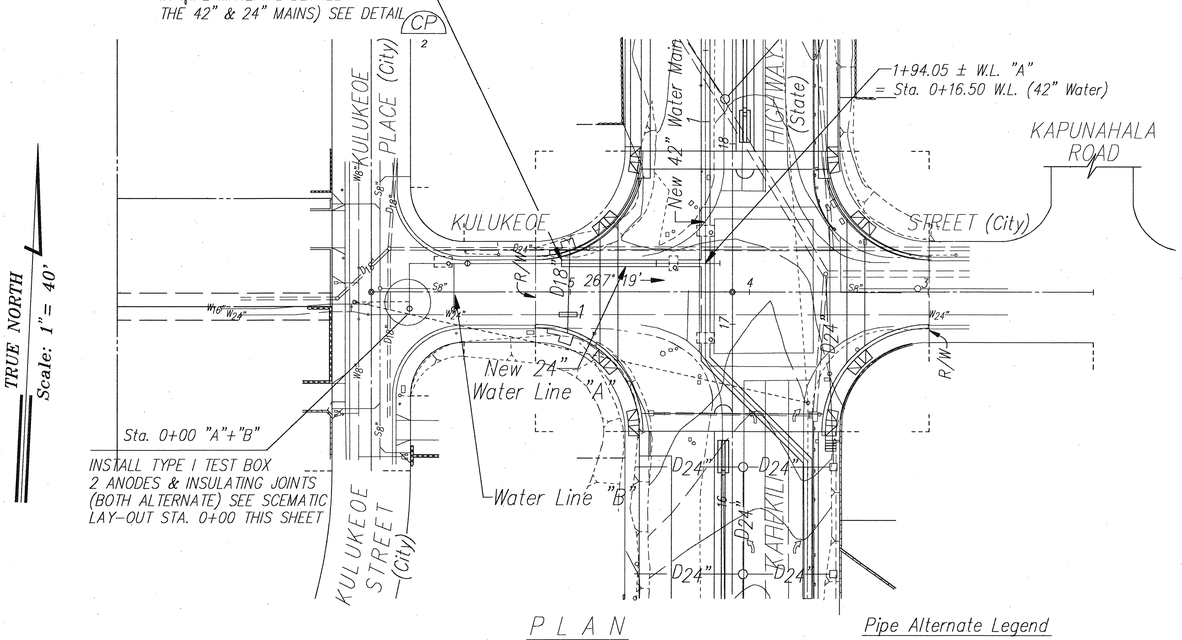


PLAN

Pipe Alternate Legend
(1) CONCRETE CYLINDER PIPE ALTERNATE (Cl 150)
(2) Ductile Iron Pipe Alternate (D.I.)

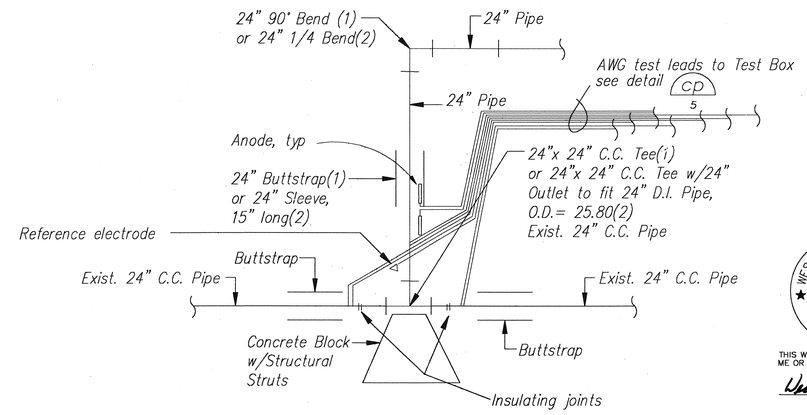


SCHEMATIC LAY-OUT STA. 0+00 24" W.L.
Not to Scale

WESTLEY K. C. CHUN
REGISTERED PROFESSIONAL ENGINEER
NO.5405-C
HAWAII U.S.A.

THIS WORK WAS PREPARED BY ME OR UNDER MY SUPERVISION

Signature

| SURVEY PLOTTED BY | |
|---|---|
| DRAWN BY | |
| TRACED BY | |
| DESIGNED BY | |
| QUANTITIES BY | |
| CHECKED BY | |
| DATE | |

ORIGINAL PLAN
NOTEBOOK
No.

APPROVED:

CHIEF, PLANNING AND ENGINEERING DIV., B.W.S. DATE: 7/12/94

| DATE | REVISION |
|---|---|
| 6/7/94 | P. E. SIGNATURE ADDED |
| 6/20/94 | REVISION TO CONSTRUCTION NOTES, TYPE I TEST BOX |

STATE OF HAWAII
DEPARTMENT OF TRANSPORTATION
HIGHWAYS DIVISION

KAHEKILI HIGHWAY
42" WATER MAIN

KAHEKILI HIGHWAY WIDENING
Likelike Hwy. to Vicinity of Haiku Road
F.A. PROJECT NO. NH-083-1(26)

SCALE: AS NOTED DATE: APRIL 1994

SHEET NO. WT14 OF WT21 SHEETS

AS-BUILT ADD.106

ROTATED:
BASE PT:

LIB: STATE\DOT\KAHEKILI\KAHET2\ 6165CP4

J:\36165\CAD\6165CP5.DWG

| FED. ROAD DIS. NO. | STATE | FED. AID PROJ. NO. | FISCAL YEAR | SHEET NO. | TOTAL SHEETS |
|---|---|---|---|---|---|
| HAWAII | HAW. | NH-083-1(26) | 1994 | ADD. 107 | 238 |

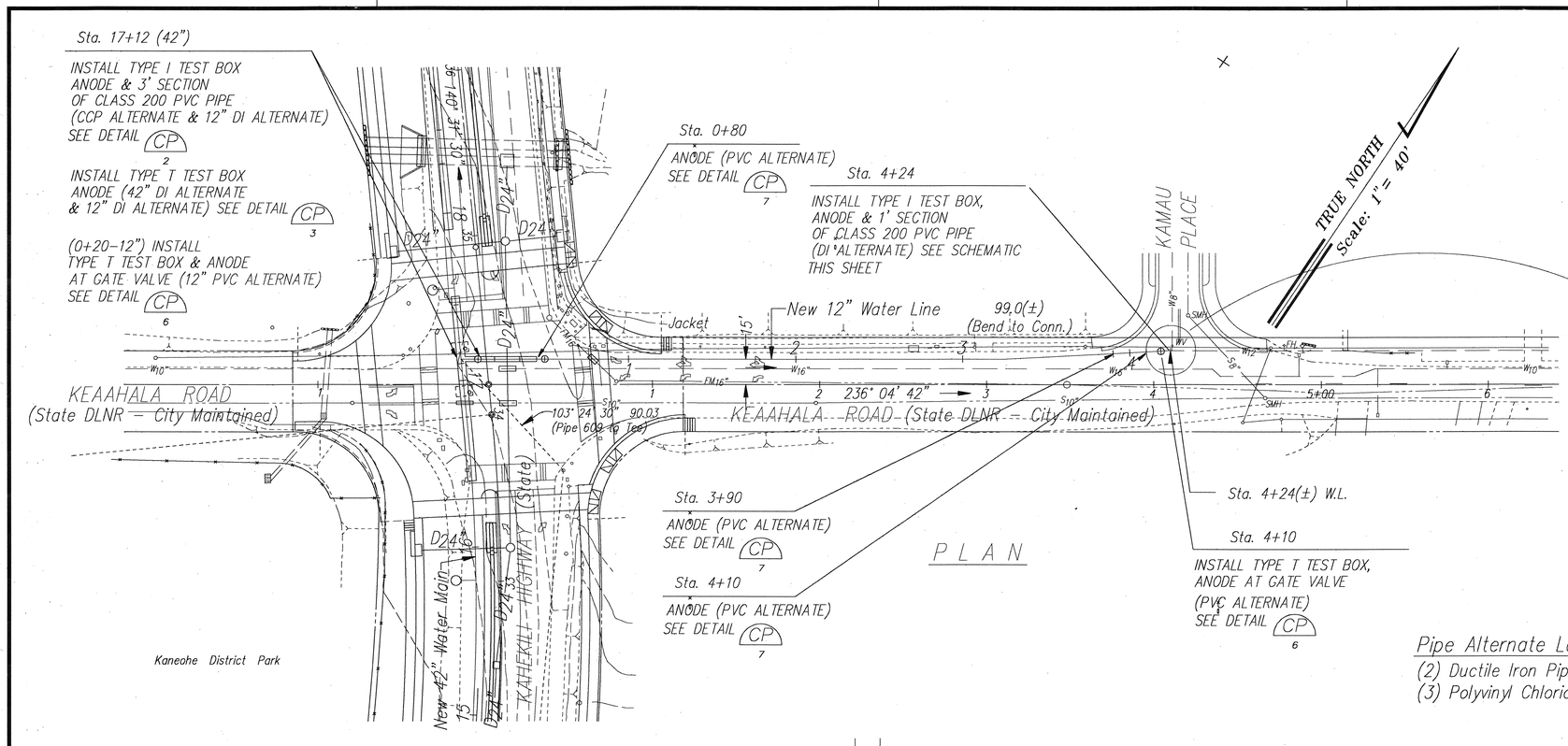


PLAN

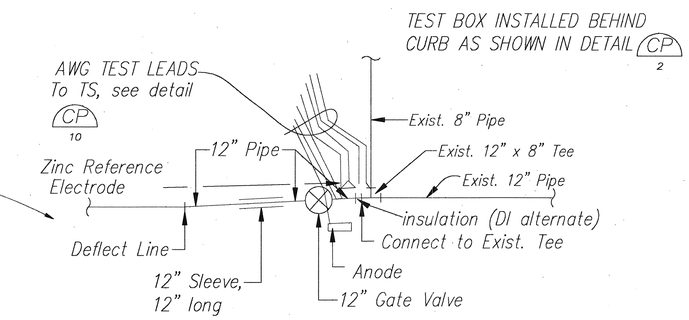


SCHEMATIC LAYOUT - STA. 4+24(±) W.L.

Not to Scale

Graphic Scale in Feet

40 20 0 40 80

Pipe Alternate Legend:

(2) Ductile Iron Pipe Alternate (D.I.)

(3) Polyvinyl Chloride Pipe Alternate (P.V.C.)

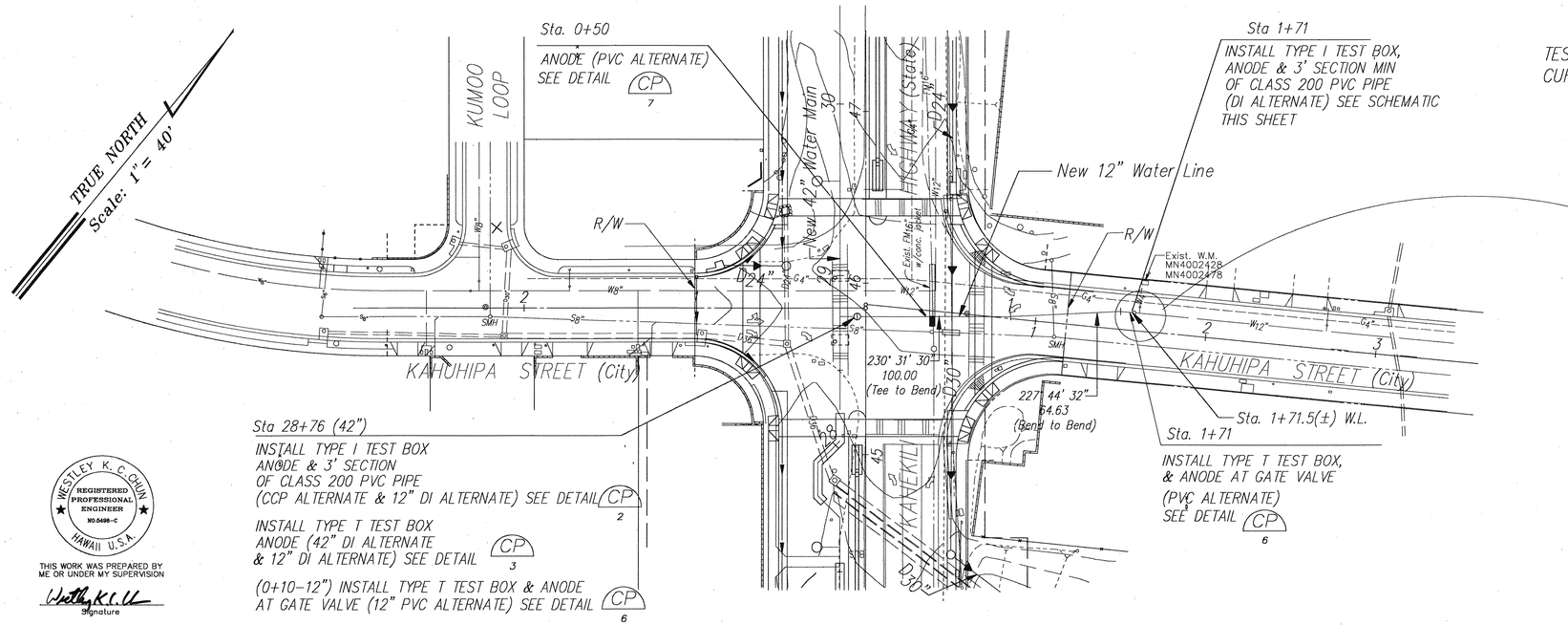


PLAN

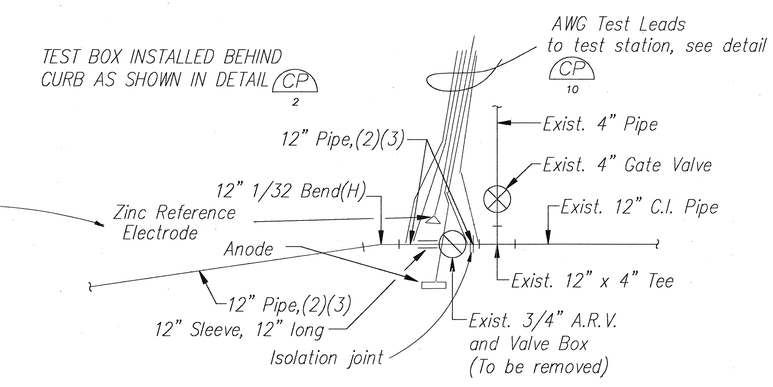


SCHEMATIC LAYOUT - STA. 1+72(±) W.L.

Not to Scale

WESTLEY K. C. CHUN
REGISTERED PROFESSIONAL ENGINEER
NO.5498-C
HAWAII U.S.A.

THIS WORK WAS PREPARED BY ME OR UNDER MY SUPERVISION

Signature

| | |
|---|---|
| SURVEY PLOTTED BY | |
| DRAWN BY | |
| TRACED BY | |
| DESIGNED BY | |
| QUANTITIES BY | |
| CHECKED BY | |
| DATE | |

ORIGINAL PLAN

NOTEBOOK No.

ROTATED: BASE PT:

| DATE | REVISION |
|---|---|
| 6/7/94 | P. E. SIGNATURE ADDED |
| 6/20/94 | REVISION TO CONSTRUCTION NOTES, TYPE I TEST BOX |

APPROVED: 7/12/94

CHIEF, PLANNING AND ENGINEERING DIV., B.W.S. DATE:

STATE OF HAWAII
DEPARTMENT OF TRANSPORTATION
HIGHWAYS DIVISION

KAHEKILI HIGHWAY
42" WATER MAIN

KAHEKILI HIGHWAY WIDENING
Likelike Hwy. to Vicinity of Haiku Road
F.A. PROJECT NO. NH-083-1(26)

SCALE: AS NOTED DATE: APRIL 1994

SHEET NO. WT15 OF WT21 SHEETS

6165CP5

LIB: STATE\DOT\KAHEKILI\KAHE172\

AS-BUILT ADD.107

| FED. ROAD DIS. NO. | STATE | FED. AID PROJ. NO. | FISCAL YEAR | SHEET NO. | TOTAL SHEETS |
|---|---|---|---|---|---|
| HAWAII | HAW. | NH-083-1(26) | 1994 | ADD. 108 | 238 |

# CORROSION CONTROL CONSTRUCTION NOTES

## GENERAL:

UNLESS OTHERWISE SPECIFIED, ALL MATERIALS SHALL BE IN ACCORDANCE WITH THE CITY AND COUNTY OF HONOLULU, BOARD OF WATER SUPPLY'S WATER SYSTEM EXTERNAL CORROSION CONTROL STANDARDS, VOLUME 3, 1991 AND ALL SUBSEQUENT AMENDMENTS AND ADDITIONS.

DRAWINGS: THE DRAWINGS FOR THE CATHODIC PROTECTION SYSTEMS ARE DIAGRAMMATIC AND SHALL NOT BE SCALED FOR EXACT LOCATIONS UNLESS SCALES ARE EXPLICITLY STATED ON THE SPECIFIC DRAWING. FIELD CONDITIONS, NON-INTERFERENCE WITH OTHER UTILITIES OR TRADE, AND ARCHITECTURAL, MECHANICAL, AND STRUCTURAL FEATURES SHALL DETERMINE EXACT LOCATIONS. CONTRACTOR SHALL NOTE OTHER EXISTING UTILITIES IN THE AREA. CARE SHALL BE TAKEN DURING EXCAVATION NOT TO DAMAGE THESE UTILITIES. ANY DAMAGED UTILITIES SHALL BE REPAIRED TO THE SATISFACTION OF THE UTILITY OWNER'S STANDARDS AT THE CONTRACTORS EXPENSES.

AS-BUILT DRAWINGS: AS-BUILT DRAWINGS FOR THE CATHODIC PROTECTION SYSTEM SHALL BE MAINTAINED BY THE CONTRACTOR DURING INSTALLATION AND CONSTRUCTION OF THE CATHODIC PROTECTION SYSTEMS. DRAWINGS SHALL BE REVISED TO SHOW EXACT LOCATIONS OF ALL ANODES, TEST BOXES, INSULATED PIPE FLANGES, AND OTHER RELATED ITEMS.

VALVE COATING: ALL BURIED VALVES 4 INCHES AND LARGER DIAMETER SHALL HAVE A 15 MIL MINIMUM DRY FILM THICKNESS FACTORY APPLIED FUSION-BONDED EPOXY COATING COMPLYING WITH AWWA STANDARD C213-91.

WAX-TAPE COATING IN LIEU OF COATING REPAIR: IF COATING REPAIR CANNOT BE MADE IN THE FIELD THE VALVES AND FITTINGS SHALL BE COATED WITH WAX-TAPE COATING CONFORMING TO ALL MINIMUM REQUIREMENTS OF AWWA C217-90 STANDARD AND CONSIST OF THREE PARTS: SURFACE PRIMER; WAX-TAPE; AND OUTER COVERING.

TEST STATIONS SHALL BE INSTALLED AS INDICATED IN THE DRAWINGS. ALL TEST STATIONS SHALL BE INSTALLED OUT OF TRAFFIC LANES AND BEHIND STREET CURBS TO ALLOW SAFE ACCESS FOR TESTING.

FLUSH MOUNTED TEST STATIONS: SHALL BE A CYLINDRICAL CONCRETE BODY WITH INSIDE DIMENSIONS OF 8-INCH BY 12-INCH LONG WITH A CAST IRON RISER RING SET IN THE TOP, WITH AN OVER ALL WEIGHT OF 57 POUNDS. THE TEST BOX IS TO BE PROVIDED WITH 13 POUND TRIANGULAR CAST IRON LID WITH THE WORDS "BWS TEST STATION" CAST INTO THE LID. THE TEST BOXES TO BE INSTALLED IN UNPAVED AREAS AND SHALL BE SET IN THE CENTER OF 2-FOOT BY 2-FOOT BY 4-INCH, 2,500 PSI CONCRETE PAD. THE TEST BOX SHALL BE BROOKS TYPE 4TT TRAFFIC RATED AT H20-44 OR EQUAL.

WIRE SPLICES: WIRE SPLICES SHALL NOT BE INSTALLED ON ANY PIPE WIRES, ANODE WIRES, OR ZINC REFERENCE ELECTRODE LEAD WIRE.

THE CONTRACTOR SHALL ACTIVATE AND TEST THE CATHODIC PROTECTION SYSTEM TO ENSURE THAT THE WATER PIPELINE IS RECEIVING A FULL LEVEL OF PROTECTION AGAINST EXTERNAL CORROSION IN ACCORDANCE WITH THE MOST RECENT EDITION NACE 169-92. THE CONTRACTOR SHALL ALSO FURNISH ALL NECESSARY EQUIPMENT AND MATERIAL REQUIRED TO PERFORM ALL TESTS. TEST AND DATA REPORTING FORMAT SHALL BE IN ACCORDANCE WITH FIGURES 8, 9, AND 10 IN PART 7, TESTING OF THE BWS'S WATER SYSTEM EXTERNAL CORROSION CONTROL STANDARDS. COMPLETED FIELD DATA SHEETS SHALL BE FORWARDED TO THE BWS ENGINEER FOR APPROVAL AND CONSTRUCTION RECORD KEEPING.

A QUALIFIED INDIVIDUAL OR FIRM EXPERIENCED IN INSPECTING THE INSTALLATION OF CORROSION CONTROL SYSTEMS, ACCEPTABLE TO AND APPROVED BY THE BOARD SHALL BE EMPLOYED BY THE CONTRACTOR TO INSPECT THE INSTALLATION OF THE EXTERNAL CORROSION CONTROL SYSTEM. INSPECTION PERSONNEL SHALL BE UNDER THE DIRECT SUPERVISION OF A REGISTERED PROFESSIONAL CORROSION ENGINEER OR A CORROSION SPECIALIST CERTIFIED BY NACE.

SERVICE: ALL SERVICE PIPE ½-INCH THROUGH 2-INCHES SHALL BE POLYBUTYLENE (PB) OR POLYETHYLENE (PE) PRESSURE PIPE IN ACCORDANCE TO AWWA C902-89 AND C901-88, RESPECTIVELY.

## CONCRETE CYLINDER PIPE ALTERNATE:

ALL PIPE JOINTS, FITTINGS, AND OTHER SPECIALS SHALL BE MORTAR COATED WITH THE SAME TYPE OF CEMENT MORTAR COATING USED ON THE PIPELINE.

THE PIPE SECTIONS TO BE CATHODICALLY PROTECTED SHALL BE ELECTRICALLY ISOLATED FROM ALL OTHER METALLIC STRUCTURES BY INSTALLING NON-METALLIC PIPE SECTIONS, INSULATED FLANGE KITS OR FLAT SHEETS OF RUBBER OR GASKET STOCK AT THE THRUST BLOCKS (BWS STANDARD DETAIL 109). IN ACCORDANCE WITH NACE RP0286-86, THE ELECTRICAL INSULATION OF CATHODICALLY PROTECTED PIPELINES.

AFTER INSTALLATION, THE EFFECTIVENESS OF ALL INSULATING FLANGE KITS OR INSULATING UNIONS SHALL BE VERIFIED TO BE IN CONFORMANCE WITH NACE RP0286-86, SECTION 7, FIELD TESTING AND MAINTENANCE.

THE ANODES SHALL BE 50 POUND HIGH POTENTIAL MAGNESIUM AND INSTALLED AT EVERY TEST STATION PLUS AT EVERY JOINT (ALTERNATING SIDES) ON 42" PIPE AND AT EVERY OTHER JOINT (ALTERNATING SIDES) ON 24" PIPE, AS PER PART 5 OF BWS'S EXTERNAL CORROSION CONTROL STANDARDS, VOLUME 3, 1991.

ALL BURIED METALLIC PIPE JOINTS, VALVES, FLANGES, FITTINGS, AND REDUCERS SHALL BE ELECTRICALLY BONDED ACROSS WITH 2-NO. 2 AWG COPPER BOND WIRES. ALL BOND WIRES SHALL BE STRANDED COPPER WIRE WITH 7/64 INCH THICK HIGH MOLECULAR WEIGHT POLYETHYLENE (HMWPE) INSULATION. THIS IS CRITICAL SINCE THE CATHODIC PROTECTION SYSTEM MAY NOT ACHIEVE 100 PERCENT OF ITS ANTICIPATED CORROSION PROTECTION IF THE PIPELINE IS NOT ELECTRICALLY CONTINUOUS.

CONTRACTOR SHALL MEASURE THE ELECTRICAL CONDUCTIVITY OF THE PIPELINE BEFORE AND AFTER BACKFILLING TO INSURE THAT ALL PIPE JOINT BOND WIRES HAVE BEEN INSTALLED CORRECTLY. ELECTRICAL CONTINUITY TESTING SHALL BE PERFORMED IN ACCORDANCE WITH PART 7 TESTING OF BWS'S WATER SYSTEM EXTERNAL CORROSION CONTROL STANDARDS. COMPLETED FIELD DATA SHEETS SHALL BE FORWARDED TO BWS'S ENGINEER FOR APPROVAL AND CONSTRUCTION RECORD KEEPING.

## DUCTILE IRON PIPE ALTERNATE:

ALL DUCTILE-IRON PIPE SHALL BE INSTALLED WITH A BONDED TAPE WRAPPED DIELECTRIC COATING, IN ACCORDANCE WITH AWWA C214-87 & C214A-91 STANDARD. THIS STANDARD IS FOR STEEL PIPE, BUT SHALL BE USED WITH DUCTILE IRON PIPE.

ALL PIPE JOINTS, FITTINGS, AND OTHER SPECIALS WHICH ARE NOT FACTORY TAPE COATED SHALL BE FIELD TAPE WRAPPED USING A THREE LAYER TAPE SYSTEM PER AWWA C209-90 STANDARD.

THE PIPE SECTIONS TO BE CATHODICALLY PROTECTED SHALL BE ELECTRICALLY ISOLATED FROM ALL OTHER METALLIC STRUCTURES (I.E. METALLIC SERVICE LATERALS, AT METER BOX, EXISTING WATER MAINS, AND STEEL IN THRUST BLOCKS) BY INSTALLING DIELECTRIC UNIONS, SECTIONS OF NONMETALLIC PIPE, INSULATING FLANGE KITS OR FLAT SHEETS OF RUBBER OR GASKET STOCK AT THE THRUST BLOCKS (BWS STD DETAIL 109). IN ACCORDANCE WITH NACE RP0286-86 THE ELECTRICAL INSULATION OF CATHODICALLY PROTECTED PIPELINES.

AFTER INSTALLATION, THE EFFECTIVENESS OF ALL INSULATING FLANGE KITS OR INSULATING UNIONS SHALL BE VERIFIED TO BE IN CONFORMANCE WITH NACE RP0286-86, SECTION 7, FIELD TESTING AND MAINTENANCE

THE ANODES SHALL BE 50 POUND HIGH POTENTIAL MAGNESIUM AND INSTALLED AT EVERY TEST STATION PLUS EVERY THIRD JOINT (ALTERNATING SIDES) ON 42" PIPE; ONE ANODE AT EACH END OF 24" MAIN IN KULUKEOE ST. (APPROX. STA 0+00 AND 1+73); 1 ANODE AT EACH END AND 1 ANODE IN CENTER OF 12" MAIN KEAAHALA RD. (APPROX. 0+00, 2+00, & 4+24); 1 ANODE AT EACH END OF 12" MAIN IN KAHUHIPA ST. (APPROX. STA 0+00 & 1+71); AND 1 PER BLOW OFF IN APPROXIMATELY THE CENTER AS PER PART 5 OF BWS'S EXTERNAL CORROSION CONTROL STANDARDS. VOLUME 3, 1991. SEE PLAN TO SEE WHICH TYPE AND SIZE OF ANODE TO BE USED AT EACH PARTICULAR LOCATION.

ALL BURIED METALLIC PIPE JOINTS, VALVES, FLANGES, FITTING AND REDUCERS SHALL BE ELECTRICALLY BONDED ACROSS WITH NO. 2 AWG COPPER BOND WIRE. ALL BOND WIRE SHALL BE STRANDED COPPER WIRE WITH 7/64 INCH THICK HIGH MOLECULAR WEIGHT POLYETHYLENE (HMWPE) INSULATION. THIS IS CRITICAL SINCE THE CATHODIC PROTECTION SYSTEM MAY NOT ACHIEVE 100 PERCENT OF ITS ANTICIPATED CORROSION PROTECTION IF THE PIPELINE IS NOT INSTALLED WITH THE BOND WIRES TO MAKE IT ELECTRICALLY CONTINUOUS.

CONTRACTOR SHALL MEASURE THE ELECTRICAL CONDUCTIVITY OF THE PIPELINE BEFORE AND AFTER BACKFILLING TO INSURE THAT ALL PIPE JOINT BOND WIRES HAVE BEEN INSTALLED CORRECTLY. ELECTRICAL CONTINUITY TESTING SHALL BE PERFORMED IN ACCORDANCE WITH PART 7 TESTING OF THE BWS'S WATER SYSTEM EXTERNAL CORROSION CONTROL STANDARDS. COMPLETED FIELD DATA SHEETS SHALL BE FORWARDED TO THE BWS ENGINEER FOR APPROVAL AND CONSTRUCTION RECORD

## PVC PIPE ALTERNATE:

ALL DUCTILE IRON PIPE, FITTINGS, AND OTHER SPECIALS WHICH ARE NOT PVC SHALL BE FUSION BONDED COATED OR FIELD TAPE WRAPPED USING A THREE LAYER TAPE SYSTEM PER AWWA C209-90 STANDARD.

THE ANODES FOR THE METALLIC FITTINGS AND VALVES SHALL BE 17 POUND HIGH POTENTIAL MAGNESIUM AS PER PART 5 OF BWS'S EXTERNAL CORROSION CONTROL STANDARD, VOLUME 3, 1991.

TEST STATIONS

KAHEKILI HIGHWAY (CCP AND DI ALTERNATES)

| PIPE STATION | TYPE | NOTES |
|---|---|---|
| (-)1+85 | T | BOTH ALTERNATES |
| 0+00 | I | ONLY-IF THERE IS A CHANGE IN PIPE MATERIAL |
| 2+28 | I | CCP ALTERNATE ONLY |
| 8+00 | T | BOTH ALTERNATES |
| 17+10 | T | DI ALTERNATE ONLY |
| | I | CCP ALTERNATE ONLY |
| 26+40 | I | CCP ALTERNATE ONLY |
| 28+76 | T | DI ALTERNATE ONLY |
| | I | CCP ALTERNATE ONLY |
| 38+00 | T | BOTH ALTERNATES |
| 47+00 | T | BOTH ALTERNATES |

KULUKEOE STREET (CCP AND DI ALTERNATES)

| | | |
|---|---|---|
| 0+00 | T | BOTH ALTERNATES |
| 1+72 (42" 0+00) | I | ONLY-IF THERE IS A CHANGE IN PIPE MATERIAL |

KEAAHALA ROAD (PVC AND DI ALTERNATES)

| | | |
|---|---|---|
| 4+24 | I | DI ALTERNATE ONLY |
| 4+10 | T | PVC ALTERNATE ONLY |
| 0+20 | T | PVC ALTERNATE ONLY |

KAHUHIPA STREET (PVC AND DI ALTERNATES)

| | | |
|---|---|---|
| 1+71 | I | DI ALTERNATE ONLY |
| | T | PVC ALTERNATE ONLY |
| 0+10 | T | PVC ALTERNATE ONLY |

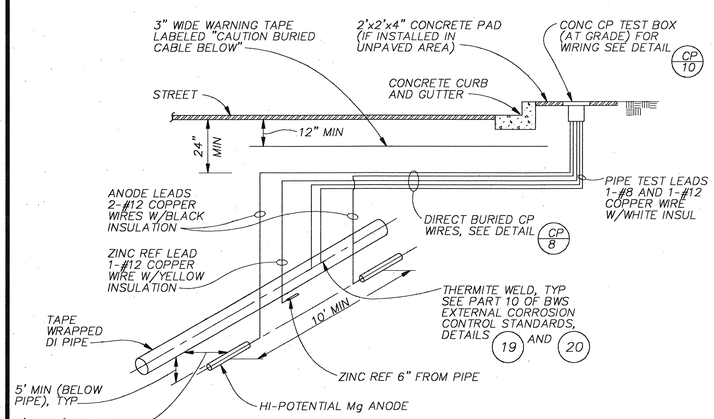


TYPE T

FLUSH MOUNTED TEST STATION (CP 1)

NTS (DUCTILE IRON ALTERNATE)

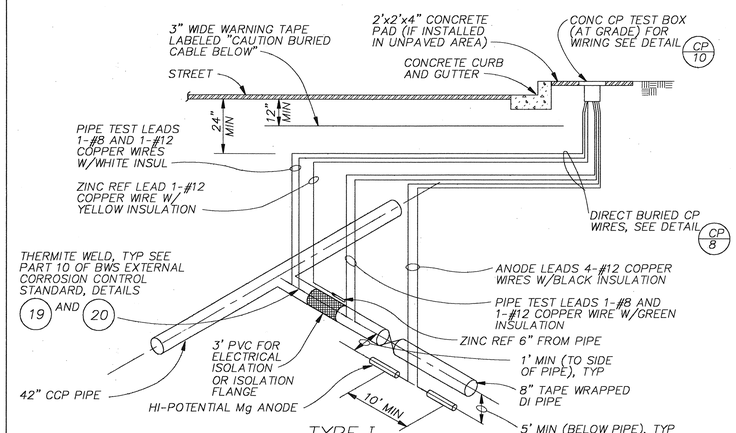


TYPE I

FLUSH MOUNTED TEST STATION AND LINE ISOLATION JOINT (CP 2)

NTS (CCP ALTERNATE)

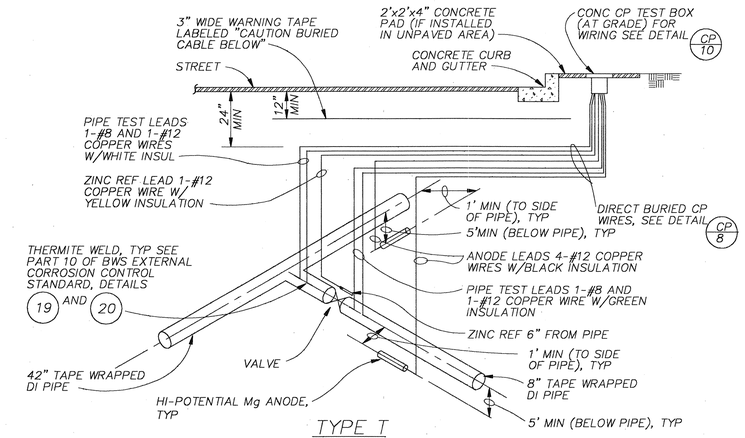


TYPE T

FLUSH MOUNTED TEST STATION AND LINE ISOLATION JOINT (CP 3)

NTS (DI ALTERNATE)

WESTLEY K. C. CHUN
REGISTERED PROFESSIONAL ENGINEER
NO.5498-C
HAWAII U.S.A.

THIS WORK WAS PREPARED BY ME OR UNDER MY SUPERVISION

Signature

APPROVED:

CHIEF, PLANNING AND ENGINEERING DIV., B.W.S. DATE: 7/12/94

| DATE | REVISION |
|---|---|
| 6/7/94 | P. E. SIGNATURE ADDED |
| 6/20/94 | REVISION TO CONSTRUCTION NOTES, TYPE I TEST BOX |

STATE OF HAWAII
DEPARTMENT OF TRANSPORTATION
HIGHWAYS DIVISION

KAHEKILI HIGHWAY
42" WATER MAIN

KAHEKILI HIGHWAY WIDENING
Likelike Hwy. to Vicinity of Haiku Road
F.A. PROJECT NO. NH-083-1(26)

SCALE: AS NOTED DATE: APRIL 1994

SHEET NO. WT16 OF WT 21 SHEETS

ORIGINAL PLAN | SURVEY PLOTTED BY | DRAWN BY | TRACED BY | DESIGNED BY | QUANTITIES BY | CHECKED BY | DATE

NOTEBOOK No.

ROTATED: BASE PT.:

LIB: STATE\DOT\KAHEKILI\KAHE172\ 6165KA01

AS-BUILT ADD.108

J:\36165\CAD\KAHE\6165KA02.DWG

| FED. ROAD DIS. NO. | STATE | FED. AID PROJ. NO. | FISCAL YEAR | SHEET NO. | TOTAL SHEETS |
|---|---|---|---|---|---|
| HAWAII | HAW. | NH-083-1(26) | 1994 | ADD. 109 | 238 |

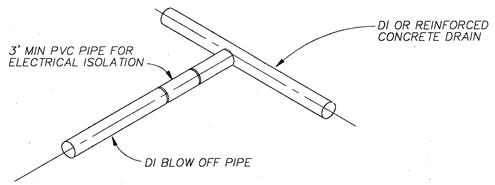


## BLOW OFF ISOLATION FROM DRAIN

NTS (CCP AND DI ALTERNATE)

CP 4

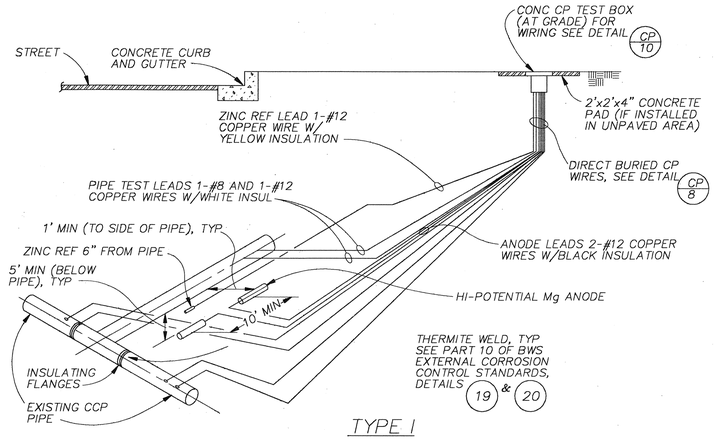


## FLUSH MOUNTED TEST STATION

NTS (CCP AND DI ALTERNATE)

CP 5

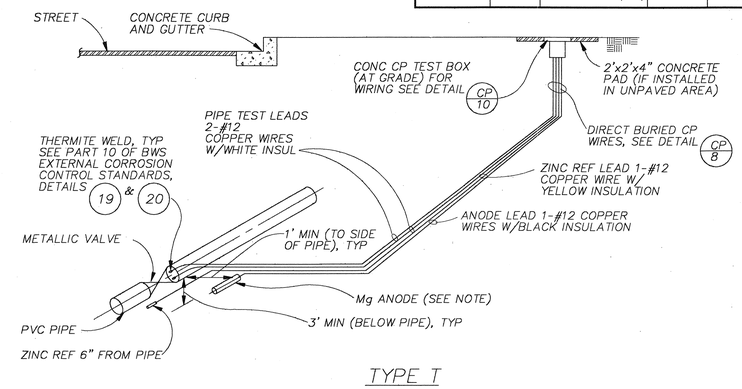


## FLUSH MOUNTED TEST STATION METALLIC VALVE

NTS (PVC PIPE ALTERNATE)

CP 6

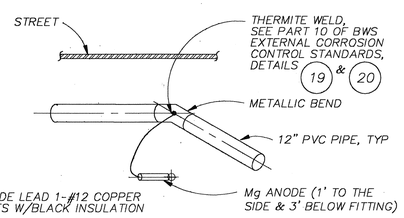


NOTE: CONNECT TWO FITTINGS TOGETHER ONLY IF LESS THAN 10' APPART

ONE FITTING

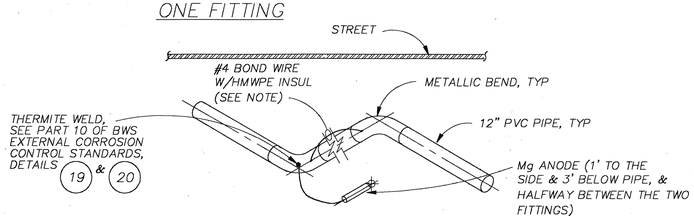


TWO FITTINGS

## GALVANIC ANODE AT METALLIC FITTINGS

NTS (PVC ALTERNATES)

CP 7

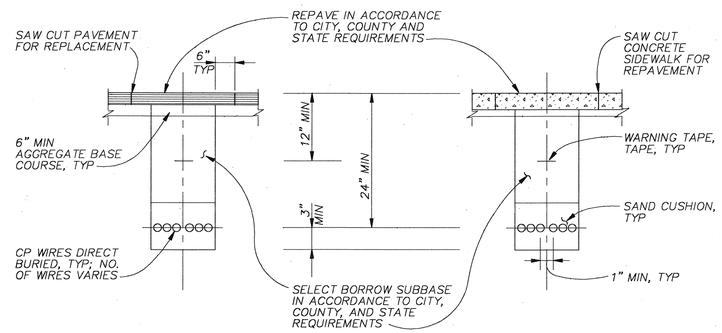


NOTE: RESTORATION OF TRENCH AND PAVEMENT SHALL EQUAL OR BE SUPERIOR OF EXISTING

## DIRECT BURIED CP WIRES

NTS

CP 8

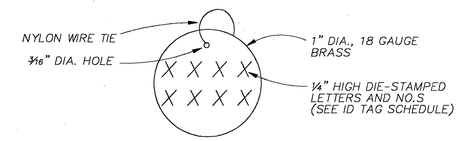


### TAG SCHEDULE

| GEN. DESCRIDTION | TAG TEXT |
|---|---|
| 42" OR 24" DUCTILE IRON OR CONCRETE CYLINDER PIPELINE | 42" (24") DI OR (CCP) WATER |
| 12" DUCTILE IRON PIPELINE | 12" DI WATER |
| BLOW OFF DUCTILE IRON PIPELINE | BO/DI WATER |
| 50 LB MAGNESIUM ANODE | 50# OR 17 MAG |
| ZINC REFERENCE ELECTRODE | ZINC REF. |

NOTE:
TAG TEXT SHOULD CORRESPOND TO SIZE & TYPE OF PIPE OR ANODE

## BRASS IDENTIFICATION TAG

NTS (ALL ALTERNATES)

CP 9

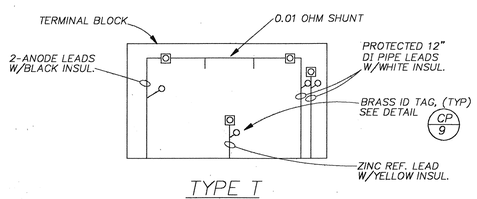


TYPE T
SEE DETAIL CP 1 CP 6

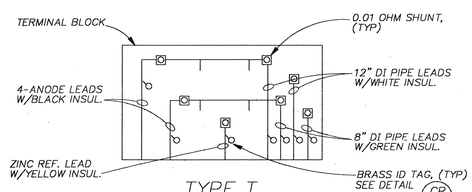


TYPE T
SEE DETAIL CP 2

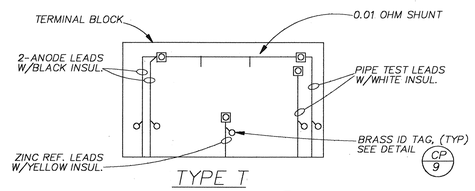


TYPE T
SEE DETAIL CP 3

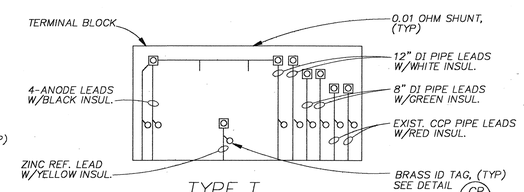


TYPE T
SEE DETAIL CP 5

## TEST BOX WIRING

NTS

CP 10

NOTES:
1. CONCRETE TEST BOX NOT SHOWN.
2. TERMINAL BLOCK LOCATED INSIDE THE TEST BOX.

APPROVED:

CHIEF, PLANNING AND ENGINEERING DIV., B.W.S. DATE: 7/12/94

| DATE | REVISION |
|---|---|
| 6/7/94 | P. E. SIGNATURE ADDED |
| 6/20/94 | REVISION TO CONSTRUCTION NOTES, TYPE I TEST BOX |

WESTLEY K. C. CHUN
REGISTERED PROFESSIONAL ENGINEER
NO.5498-C
HAWAII U.S.A.

THIS WORK WAS PREPARED BY ME OR UNDER MY SUPERVISION

Signature

STATE OF HAWAII
DEPARTMENT OF TRANSPORTATION
HIGHWAYS DIVISION

**KAHEKILI HIGHWAY**
**42" WATER MAIN**

KAHEKILI HIGHWAY WIDENING
Likelike Hwy. to Vicinity of Haiku Road
F.A. PROJECT NO. NH-083-1(26)

SCALE: AS NOTED DATE: APRIL 1994

SHEET NO. WT17 OF WT21 SHEETS

SURVEY PLOTTED BY
DRAWN BY
TRACED BY
DESIGNED BY
QUANTITIES BY
CHECKED BY
DATE

ORIGINAL PLAN
NOTEBOOK
No.

DATE PLOT SCALE: 1 INCH = 1 FOOT
BASE FT.

6165KA02

LIB: STATE\DOT\KAHEKILI\KAHE172\

AS-BUILT ADD.109

| FED. ROAD DIS. NO. | STATE | FED. AID PROJ. NO. | FISCAL YEAR | SHEET NO. | TOTAL SHEETS |
|---|---|---|---|---|---|
| HAWAII | HAW. | NH-083-1(26) | 1994 | 110 | 238 |

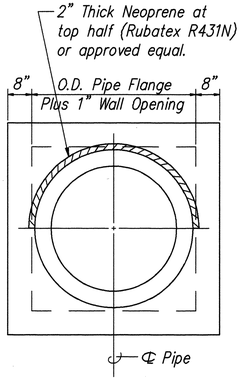


ELEVATION

Note: Capping Collar shall be poured after pipe is securely in place.

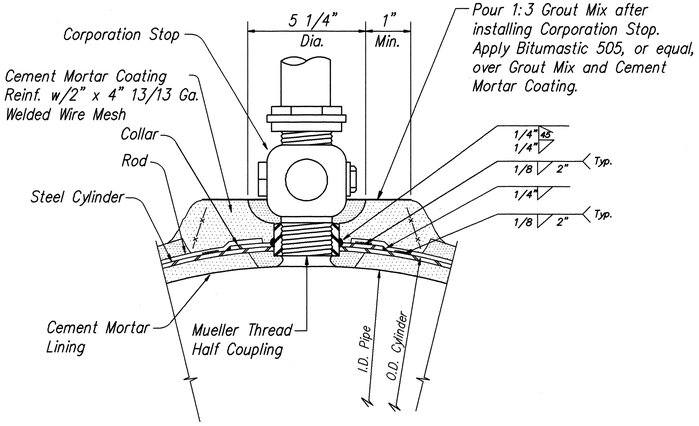


## DETAIL AT CORPORATION STOP
### FOR CONNECTIONS TO C.C. PIPE MAIN

Not to Scale

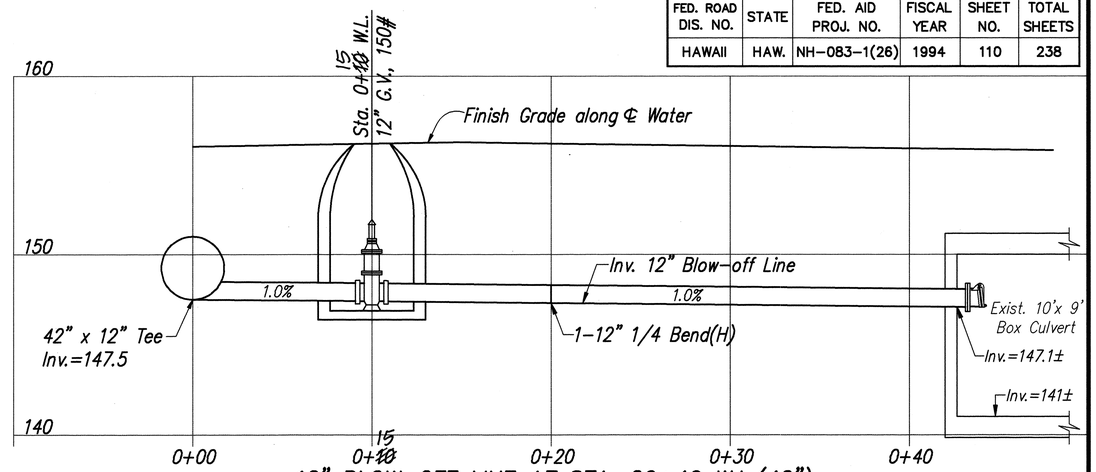


## 12" BLOW-OFF LINE AT STA. 26+40 W.L.(42")

Scale: 1"= 4'

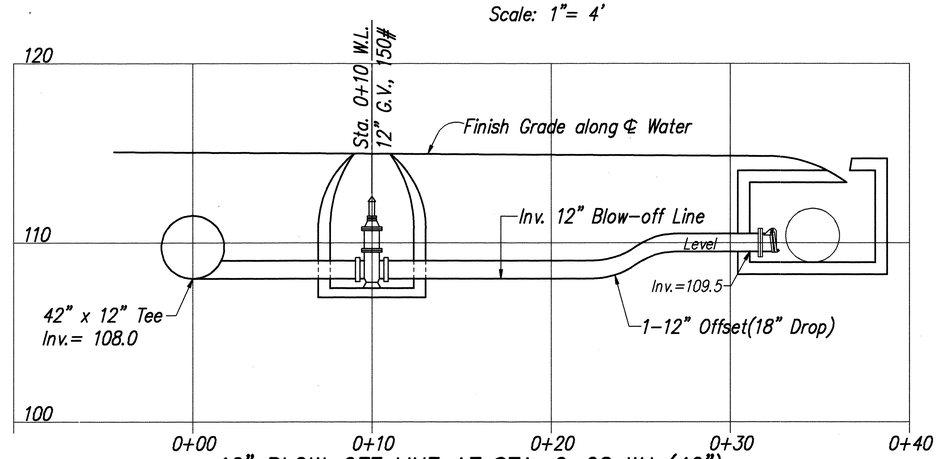


## 12" BLOW-OFF LINE AT STA. 2+28 W.L.(42")

Scale: 1"= 4'

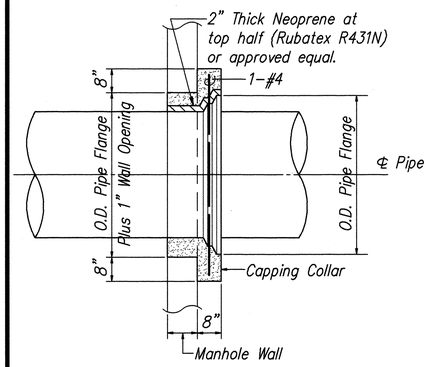


SECTION

## CAPPING COLLAR DETAIL
### FOR D.I. AND C.C. PIPE AT TYPE "A" BUTTERFLY VALVE MANHOLE

Scale: 1/2"= 1'-0"

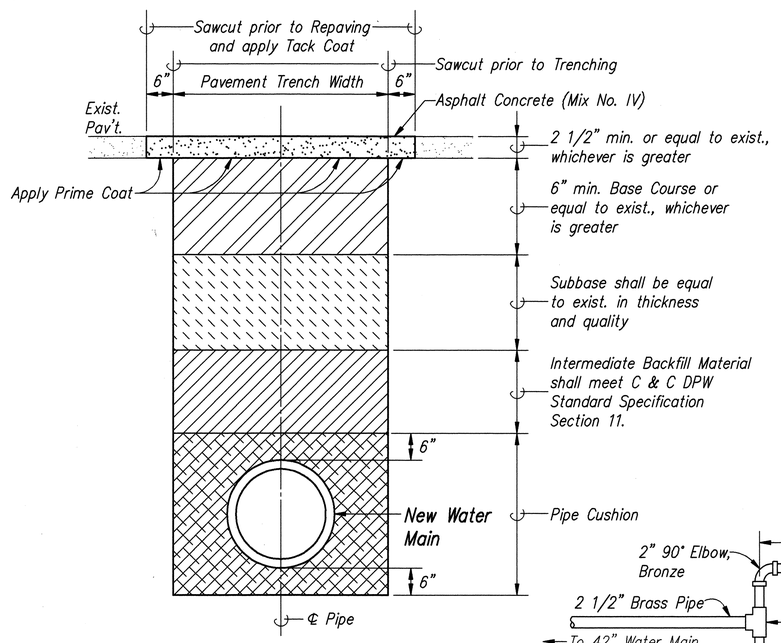


## TYPICAL TRENCH RESTORATION DETAIL

Not to Scale

1- Subbase under Curb and Gutter shall match existing thickness and quality.

2- This Detail does not apply for restoration of Concrete Curb and Gutter.

3- Pavement Structure shall be equal to or better than existing in thickness & quality.

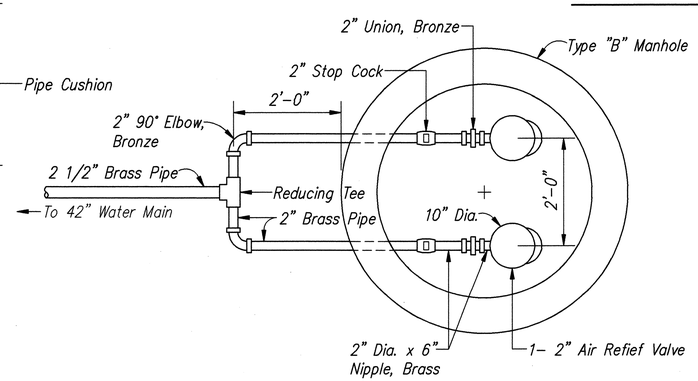


## PLAN - OFFSET TYPE "B" MANHOLE W/2- 2" AIR RELIEF VALVE

Scale : 3/4" = 1'-0"

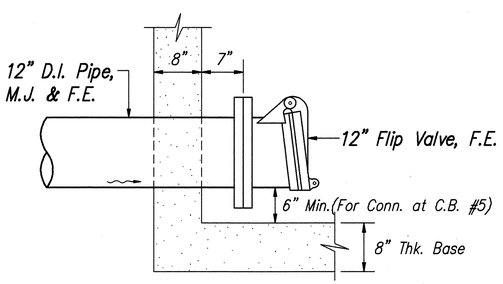


## DETAIL - FLAP VALVE FOR BLOW-OFF LINE

Not to Scale

| DATE | REVISION |
|---|---|
| 7/13/94 | REVISED THICKNESS AND ADDED NOTE FOR TRENCH RESTORATION DETAIL. |

APPROVED:

CHIEF, PLANNING AND ENGINEERING DIVISION, B.W.S. — DATE 7/12/94

DEXTER S. EJI — REGISTERED PROFESSIONAL ENGINEER No. 4739-C — HAWAII, U.S.A.

THIS WORK WAS PREPARED BY ME OR UNDER MY SUPERVISION

ParEn, Inc. dba PARK ENGINEERING

STATE OF HAWAII
DEPARTMENT OF TRANSPORTATION
HIGHWAYS DIVISION

## WATER DETAILS

KAHEKILI HIGHWAY WIDENING
Likelike Hwy. to Vicinity of Haiku Road
F.A. PROJECT NO. NH-083-1(26)

SCALE: AS NOTED — DATE: APRIL 1994

SHEET No. WT18 OF WT21 SHEETS

AS-BUILT C.O. 110

ORIGINAL PLAN — NOTEBOOK No. — SURVEY PLOTTED BY — DRAWN BY — TRACED BY — DESIGNED BY — QUANTITIES BY — CHECKED BY — DATE

ROTATED: BASE PT.

LIB: STATE\DOT\KAHEKILI\ADDENDUM WTDETR 7/14/94 AMM

| FED. ROAD DIS. NO. | STATE | FED. AID PROJ. NO. | FISCAL YEAR | SHEET NO. | TOTAL SHEETS |
|---|---|---|---|---|---|
| HAWAII | HAW. | NH-083-1(26) | 1994 | 111 | 238 |

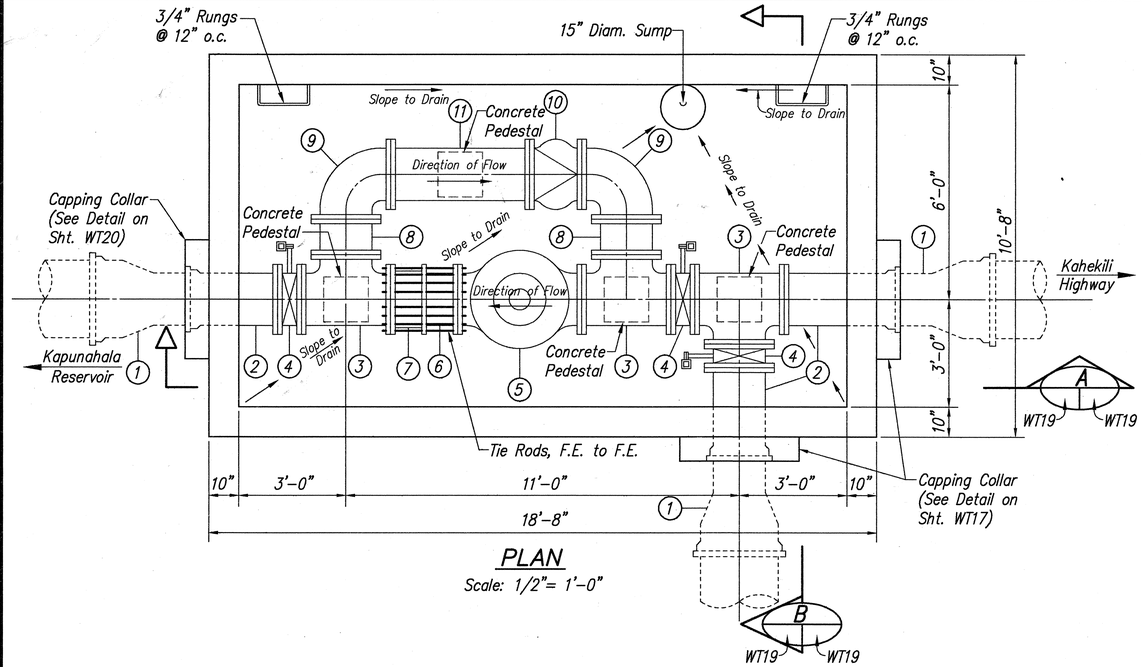


PLAN
Scale: 1/2"= 1'-0"

## MATERIAL LIST

| Item No. | Size | Ends | Description |
|---|---|---|---|
| 1 | 24" x 16" | L.E.B. | Reducer |
| 2 | 16" | F.E. & Bell | Pipe, Length to Fit |
| 3 | 16"x 16"x 16" | F.E. | Tee |
| 4 | 16" | F.E. | Butterfly Valve w/Operating Nut |
| 5 | 16" | F.E. | Pilot Operated Reducing/Shutoff Valve w/Two (2) Two Way Solenoid Valves, Cla.-Valve 93G-01 or Equal |
| 6 | 16" | F.E. & P.E. | Pipe, Length to Fit |
| 7 | 16" | – | Flanged Coupling Adapter |
| 8 | 16" | F.E. | Pipe, 12" Long |
| 9 | 16" | F.E. | 90° Bend |
| 10 | 16" | F.E. | Center Guided Check Valve |
| 11 | 16" | F.E. | Pipe, Length to Fit |

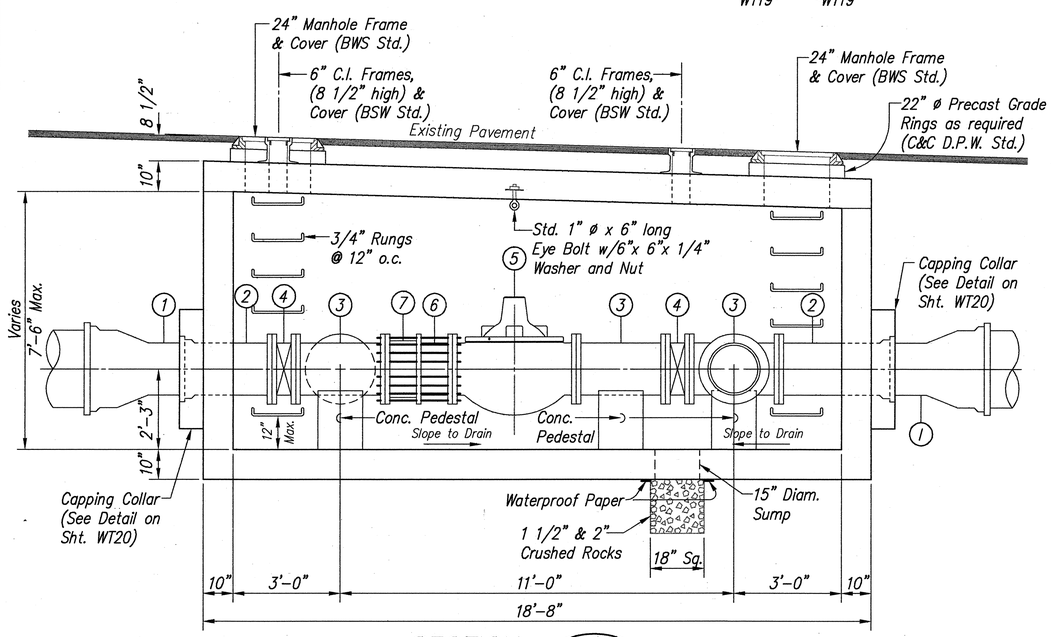


SECTION A
Scale: 1/2"= 1'-0" WT19 WT19

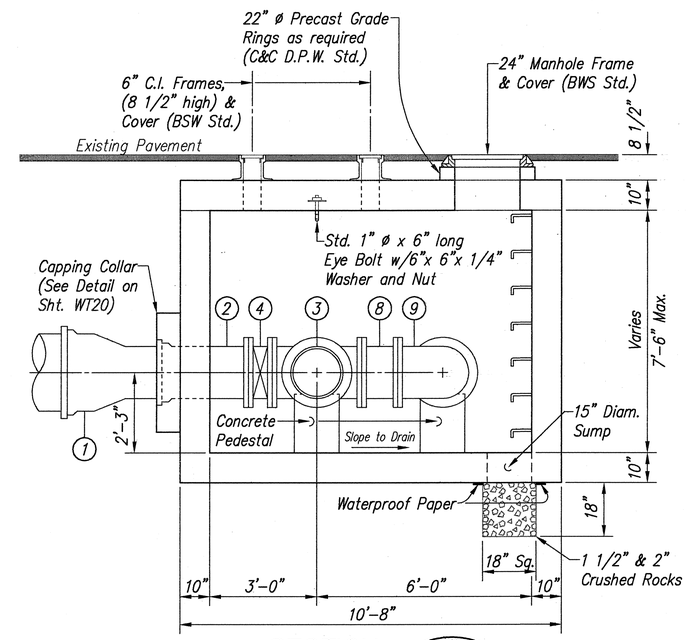


SECTION B
Scale: 1/2"= 1'-0" WT19 WT19

## REDUCING/SHUTOFF VALVE VAULT PIPING DETAILS

Note: For Structural Details, See Sheet WT20.

APPROVED:

CHIEF, PLANNING AND ENGINEERING DIVISION, B.W.S. — DATE 7/12/94

DEXTER S. EJI REGISTERED PROFESSIONAL ENGINEER No. 4739-C HAWAII, U.S.A.

THIS WORK WAS PREPARED BY ME OR UNDER MY SUPERVISION
PorEn, Inc. dba PARK ENGINEERING

STATE OF HAWAII
DEPARTMENT OF TRANSPORTATION
HIGHWAYS DIVISION

**WATER DETAILS**

KAHEKILI HIGHWAY WIDENING
Likelike Hwy. to Vicinity of Haiku Road
F.A. PROJECT NO. NH-083-1(26)

SCALE: AS NOTED DATE: APRIL 1994

SHEET No. WT19 OF WT21 SHEETS

ORIGINAL PLAN | NOTEBOOK No. | SURVEY PLOTTED BY | DRAWN BY | TRACED BY | DESIGNED BY | QUANTITIES BY | CHECKED BY | DATE

ROTATED: BASE PT.

LB: STATE\DOT\KAHEKILI\KAHET72\ WT0ET2 5/27/94 AMM

AS-BUILT 111

| FED. ROAD DIS. NO. | STATE | FED. AID PROJ. NO. | FISCAL YEAR | SHEET NO. | TOTAL SHEETS |
|---|---|---|---|---|---|
| HAWAII | HAW. | NH-083-1(26) | 1994 | 112 | 238 |

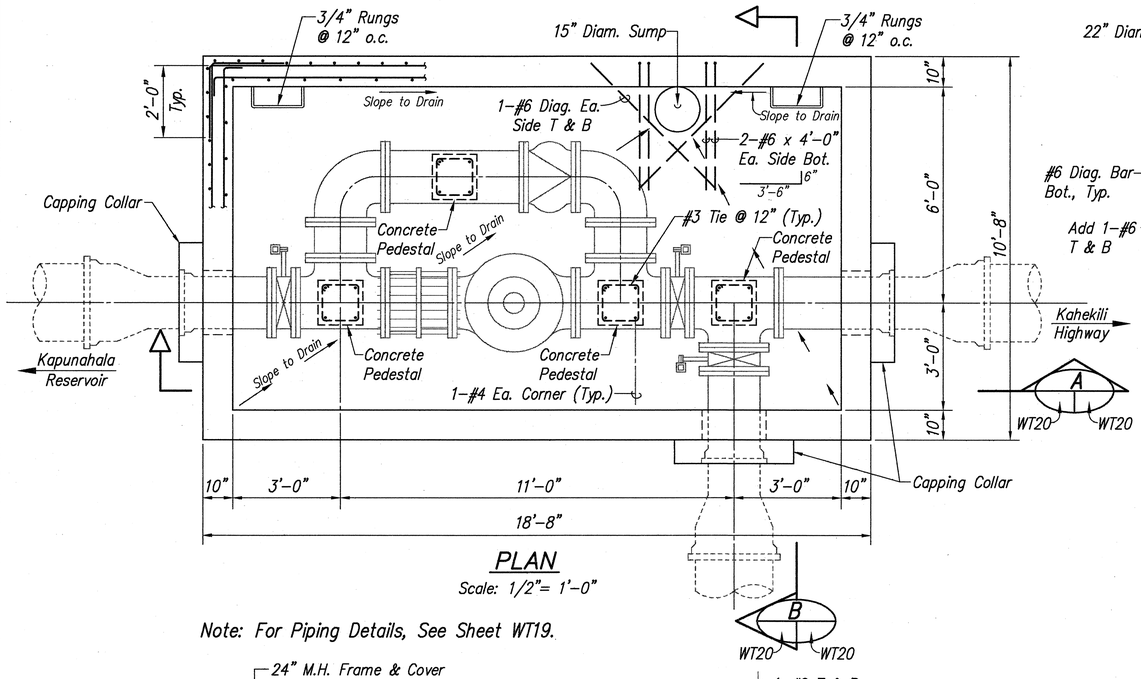


## PLAN

Scale: 1/2"= 1'-0"

Note: For Piping Details, See Sheet WT19.

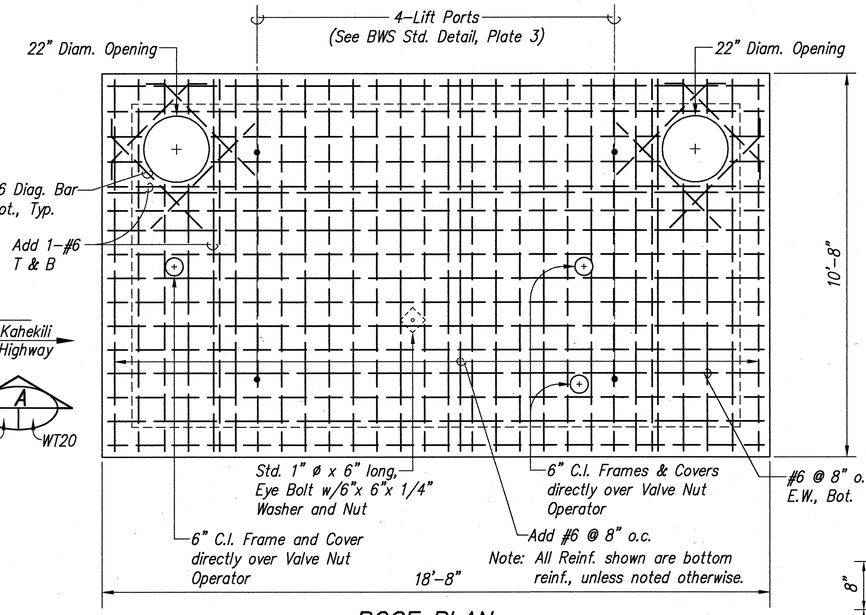


## ROOF PLAN

Scale: 1/2"= 1'-0"

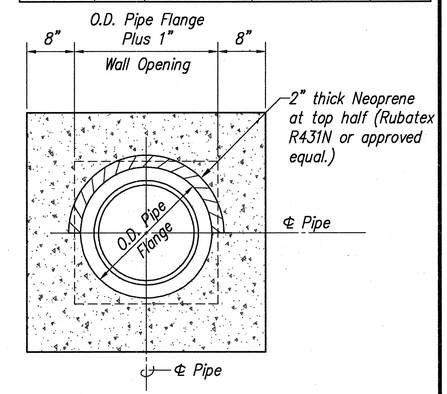


## ELEVATION

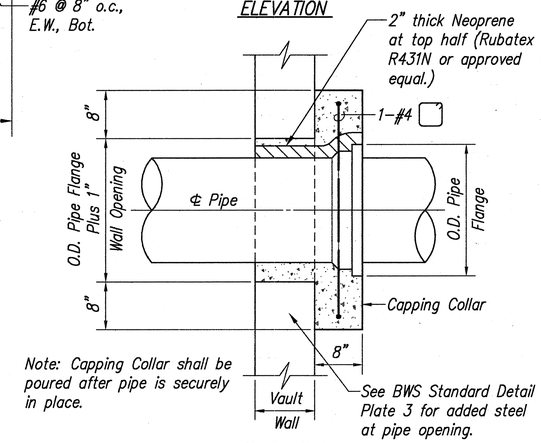


Note: Capping Collar shall be poured after pipe is securely in place.

## SECTION

## CAPPING COLLAR DETAIL

Scale: 1"= 1'-0"

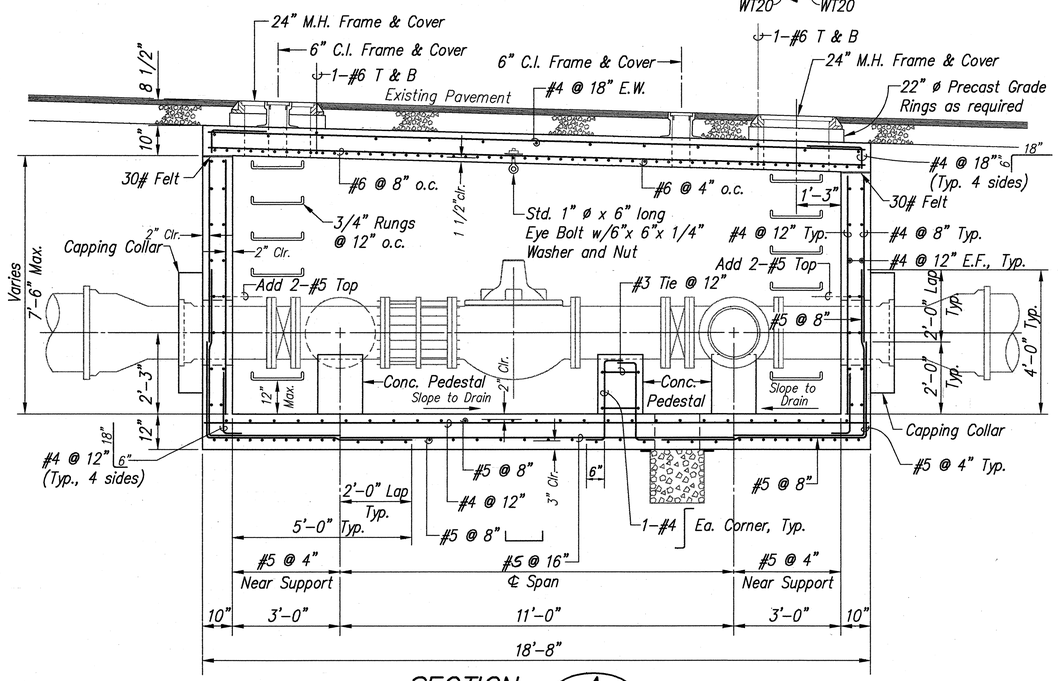


## SECTION A

Scale: 1/2"= 1'-0" WT20 WT20

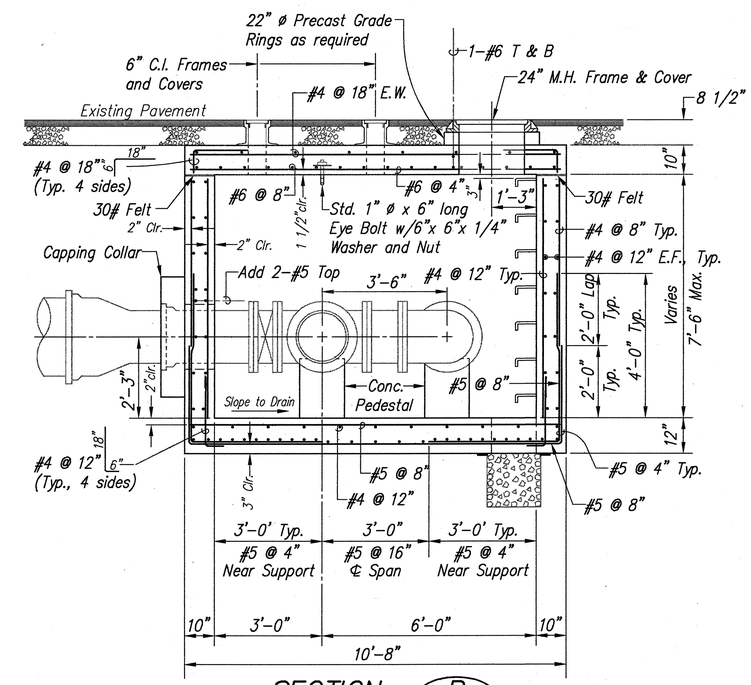


## SECTION B

Scale: 1/2"= 1'-0" WT20 WT20

## REDUCING/SHUTOFF VALVE VAULT STRUCTURAL DETAILS

APPROVED:

CHIEF, PLANNING AND ENGINEERING DIVISION, B.W.S. 7/12/94 DATE

KWONG CHUN TIT — REGISTERED PROFESSIONAL ENGINEER No. 2147-S — HAWAII, U.S.A.

THIS WORK WAS PREPARED BY ME OR UNDER MY SUPERVISION

PorEn, Inc. dba PARK ENGINEERING

DEXTER S. EJI — REGISTERED PROFESSIONAL ENGINEER No. 4739-C — HAWAII, U.S.A.

THIS WORK WAS PREPARED BY ME OR UNDER MY SUPERVISION

PorEn, Inc. dba PARK ENGINEERING

STATE OF HAWAII
DEPARTMENT OF TRANSPORTATION
HIGHWAYS DIVISION

## WATER DETAILS

KAHEKILI HIGHWAY WIDENING
Likelike Hwy. to Vicinity of Haiku Road
F.A. PROJECT NO. NH-083-1(26)

SCALE: AS NOTED DATE: APRIL 1994

SHEET No. WT20 OF WT21 SHEETS

ORIGINAL PLAN | NOTEBOOK | No. | SURVEY PLOTTED BY | DRAWN BY | TRACED BY | DESIGNED BY | QUANTITIES BY | CHECKED BY | DATE

ROTATED: BASE PT.

DB: STATE\DOT\KAHEKILI\KAHE172\ WT0C13 5/21/94 AMM

AS-BUILT 112

| FED. ROAD DIS. NO. | STATE | FED. AID PROJ. NO. | FISCAL YEAR | SHEET NO. | TOTAL SHEETS |
|---|---|---|---|---|---|
| HAWAII | HAW. | NH-083-1(26) | 1994 | 113 | 238 |

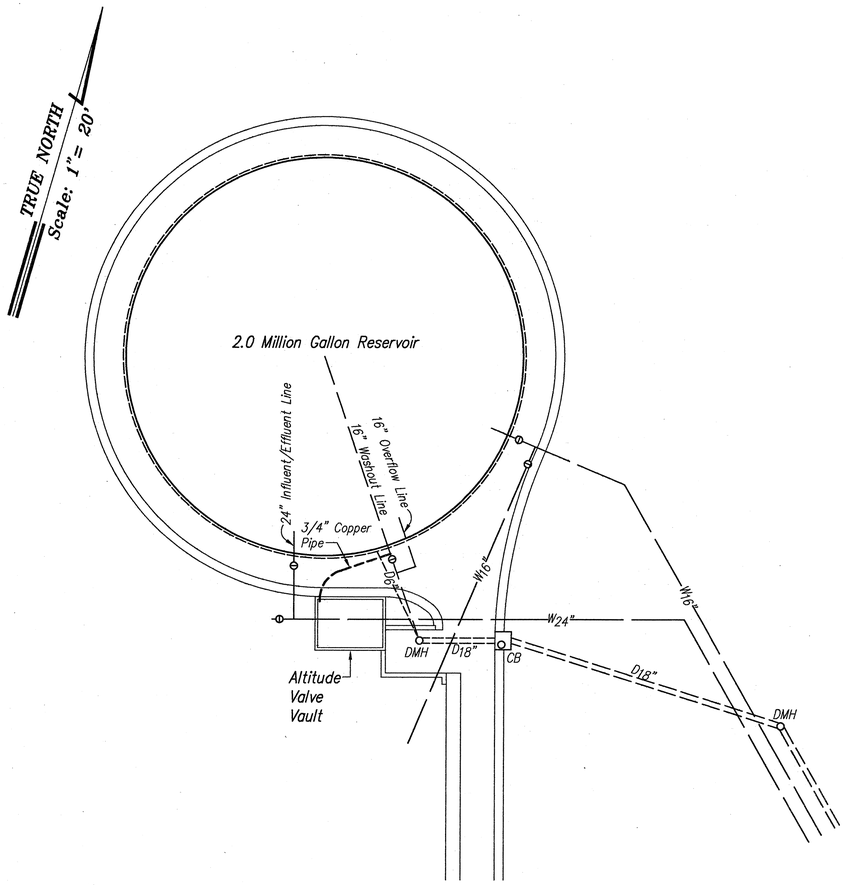


## PLAN – EXISTING KAPUNAHALA RESERVOIR

Scale: 1"= 20'

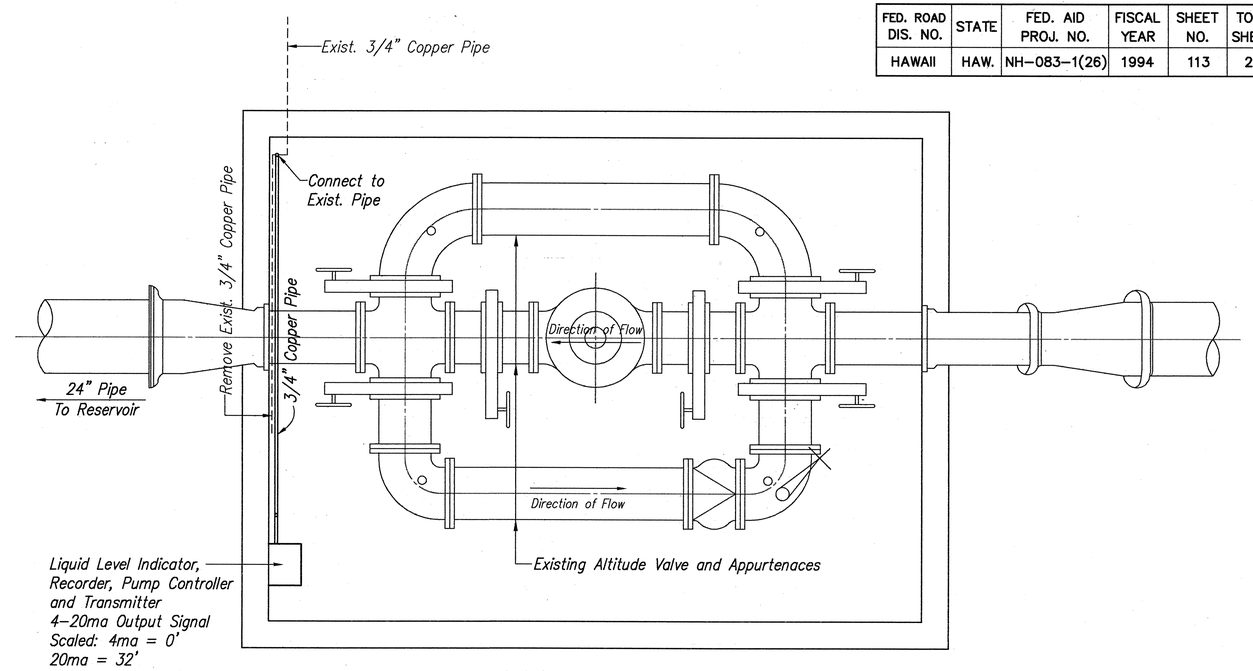


## EXIST. ALTITUDE VALVE VAULT

Not to Scale

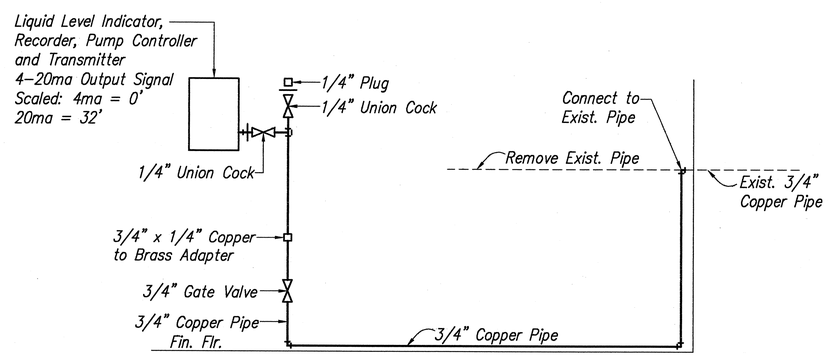


## RECORDER PIPING SCHEMATIC

Not to Scale

DEXTER S. EJI
REGISTERED PROFESSIONAL ENGINEER
No. 4739-C
HAWAII, U.S.A.

APPROVED:

CHIEF, PLANNING AND ENGINEERING DIVISION, B.W.S. — DATE 7/12/94

THIS WORK WAS PREPARED BY ME OR UNDER MY SUPERVISION
PorEn, Inc.
dba PARK ENGINEERING

STATE OF HAWAII
DEPARTMENT OF TRANSPORTATION
HIGHWAYS DIVISION

## WATER DETAILS

KAHEKILI HIGHWAY WIDENING
Likelike Hwy. to Vicinity of Haiku Road
F.A. PROJECT NO. NH-083-1(26)

SCALE: AS NOTED DATE: APRIL 1994

SHEET No. WT21 OF WT21 SHEETS

AS-BUILT 113

| ORIGINAL PLAN | SURVEY PLOTTED BY | DATE |
|---|---|---|
| | DRAWN BY | |
| | TRACED BY | |
| | DESIGNED BY | |
| | QUANTITIES BY | |
| NOTEBOOK | CHECKED BY | |
| No. | | |

ROTATED:
BASE PT.:

LIB: STATE\DOT\KAHEKILI\KAHE172\
WTE174 5/27/94 AMM