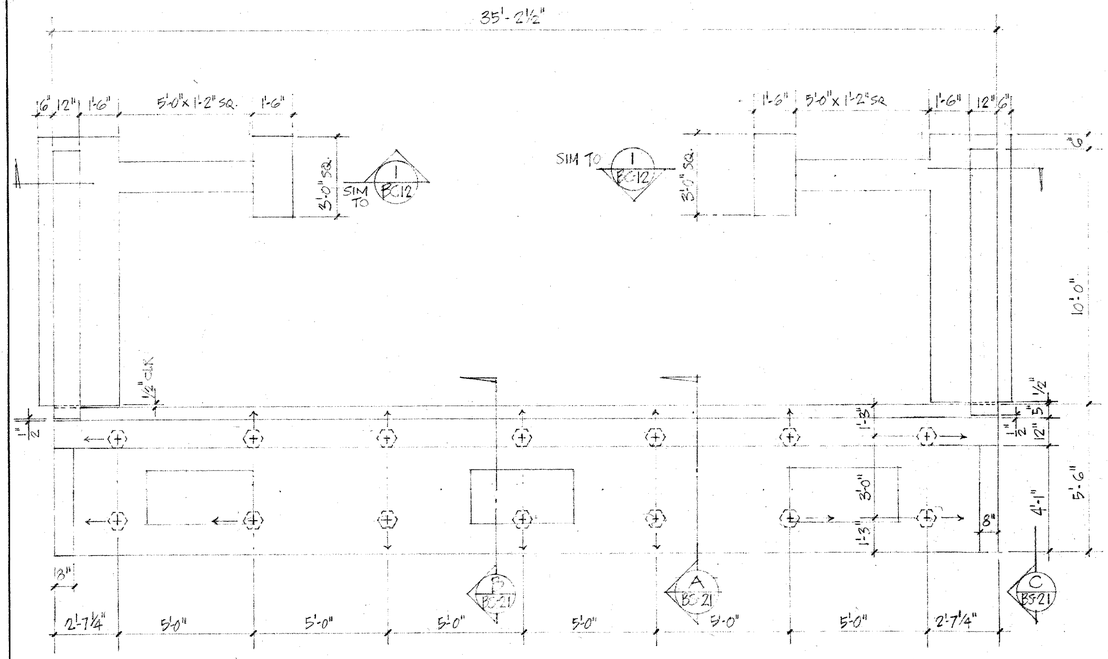

G BS-21 PLAN-TEMPORARY ABUTMENT & RETAINING WALL
3/8" = 1'-0"

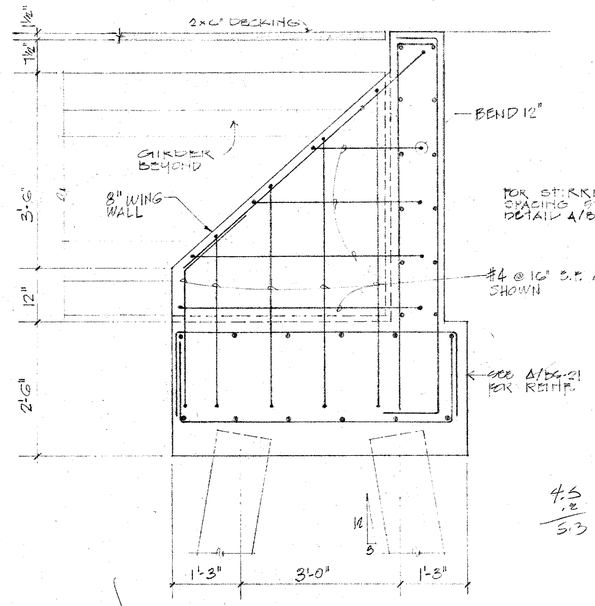

C BS-21 WING WALL ELEV.
3/4" = 1'-0"

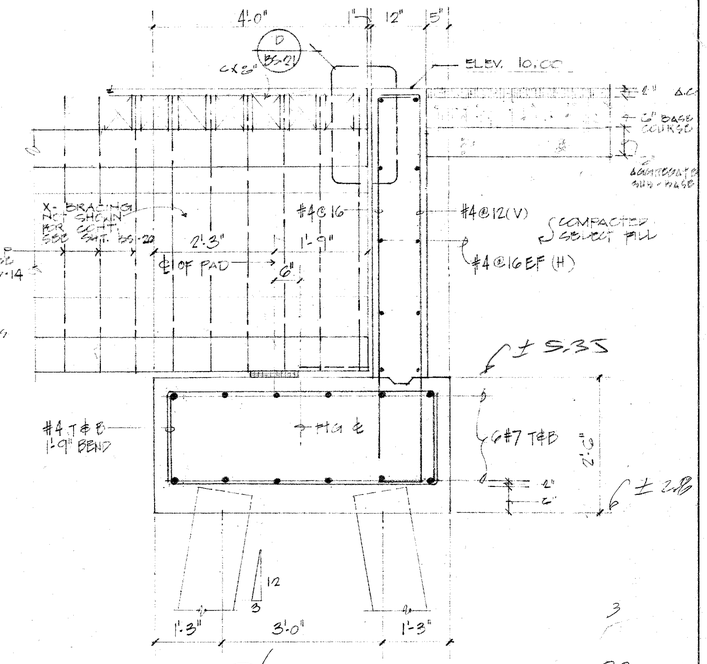

A BS-21 SECTION
3/4" = 1'-0"

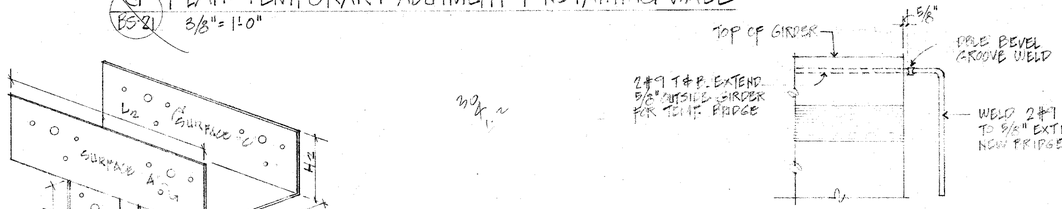

E BS-21 TEMPORARY GIRDER END
1" = 1'-0"

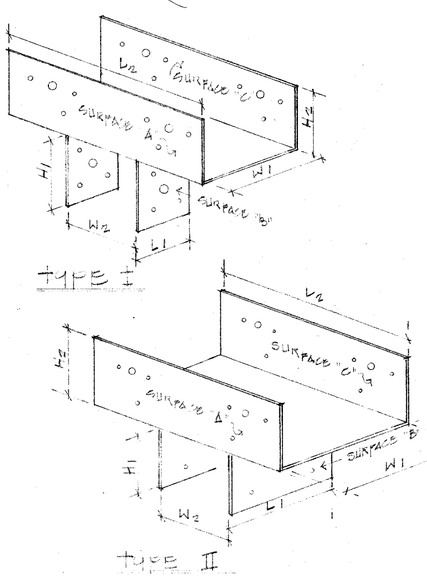

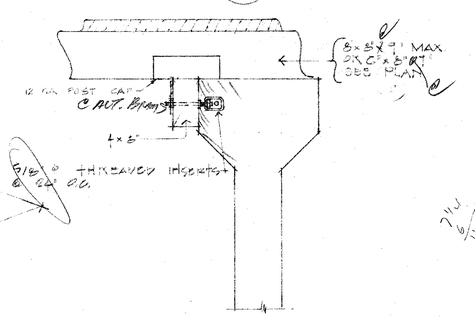

TYPE	DIMENSIONS							NAIL		
	BEAM WIDTH N1	N2	L1	L2	W1	H1	H2	SURFACE "A"	SURFACE "B"	SURFACE "C"
I	5½	3 11/16"	4 11/16"	11"	7 13/16	2 3/4	3½"	4-16d	6-16d	4-16d
II	7½	3 11/16	6½"	11"	7 13/16	3 3/4	3 3/4"	4-16d	6-16d	1-16d

F BS-21 DETAIL
SCALE: 1"=1'-0"

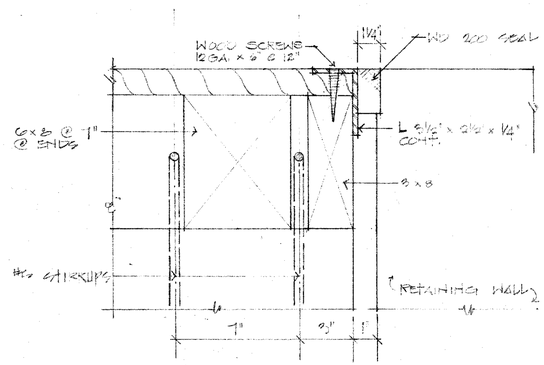

D BS-21 EXP. JOINT DETAIL
SCALE: 3" = 1'-0"

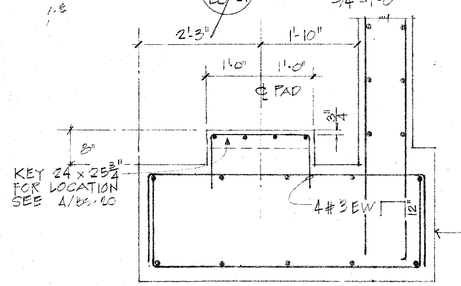

B BS-21 SECTION @ SHEAR KEY
SCALE: 3/4" = 1'-0"

U. S. DEPARTMENT OF AGRICULTURE
SOIL CONSERVATION SERVICE

NO.	DATE	DESCRIPTION	ENGR.	DEPT. OR DIV.
		REVISIONS		APPR'D

DEPARTMENT OF PUBLIC WORKS
CITY AND COUNTY OF HONOLULU
DIVISION OF ENGINEERING

KAMEHAMEHA HIGHWAY BRIDGE OVER KAHALUU STREAM
KAHALUU, OAHU, HAWAII

TEMPORARY BR. ABUTMENT DETAILS

ENGINEER M.Y. DATE 4/7/77
DRAFTSMAN J.R.L. CHECKED BY
APPROVED
CHIEF, DIVISION OF ENGINEERING

JOB NO. 38-77 DWG NO. 7-E-23094

Sheet BS-21 of 32 Sheets

FILE	POCKET	FOLDER	
21	2	1	56