FED. ROAD DIST. NO.	STATE	PROJ. NO.	FISCAL YEAR	SHEET NO.	TOTAL SHEETS
HAWAII	HAW.	83C-01-88	1990	4	4

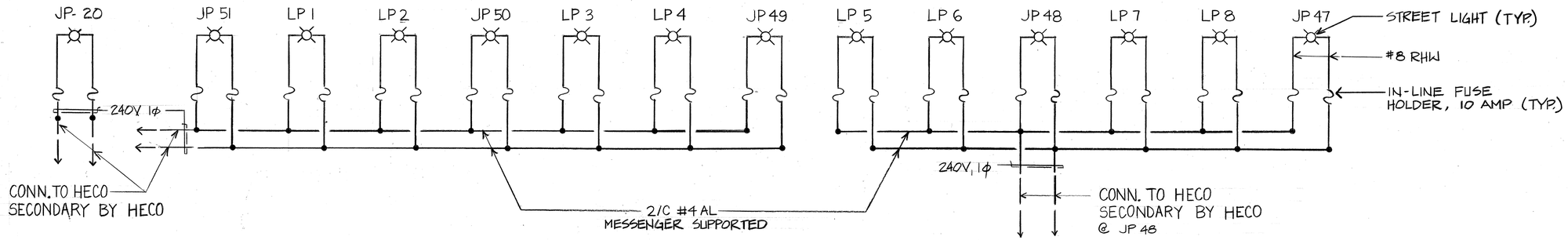

WIRING DIAGRAM

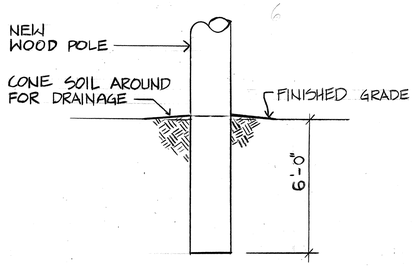

1/4 POLE SETTING DETAIL
N.T.S.

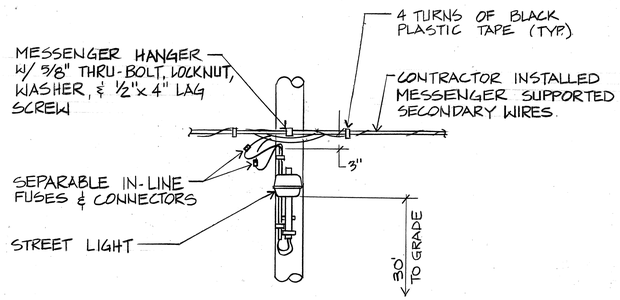

2/4 STREET LIGHT CIRCUIT TANGENT DETAIL
N.T.S.

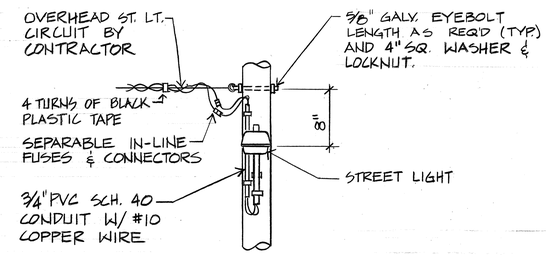

3/4 STREET LIGHT CIRCUIT DEAD END DETAIL
N.T.S.

ORIGINAL PLAN	SURVEY PLOTTED BY	DATE
	DRAWN BY	
	TRACED BY	
NOTE BOOK	DESIGNED BY	
	QUANTITIES BY	
No.	CHECKED BY	

ALBERT S. C. CHONG
REGISTERED PROFESSIONAL ENGINEER
No. 1003-E
HAWAII, U.S.A.

THIS WORK WAS PREPARED BY ME OR UNDER MY SUPERVISION

STATE OF HAWAII
DEPARTMENT OF TRANSPORTATION
HIGHWAYS DIVISION

STREET LIGHT CIRCUIT DETAILS AND WIRING DIAGRAM
KAMEHAMEHA HIGHWAY STREET LIGHTS
LAIE BRIDGE
TO MALAEKAHANA STATE PARK
PROJECT NO. 83C-01 88
DISTRICT OF KOOLAULOA, ISLAND OF OAHU
SCALE: AS SHOWN DATE:

SHEET No. 3 OF 3 SHEETS