FED. ROAD DIST. NO.	STATE	FED. AID PROJ. NO.	FISCAL YEAR	SHEET NO.	TOTAL SHEETS
HAWAII	HAW.	NH-083-1(072)	2015	72	107

LEGEND

- 4 each Type A Raised Pavement Markers
  Type C Raised Pavement Markers @ 40'-0" o.c.
- 4 each Type J Raised Pavement Markers
  Type D Raised Pavement Markers @ 40'-0" o.c.
- 8" White Stripe with Type C Raised Pavement Markers @ 20'-0" o.c. (Tape, Type I or Thermoplastic Extrusion)
- 4" Double Solid Yellow with Type D Raised Pavement Markers @ 20'-0" o.c. (Tape, Type I or Thermoplastic Extrusion))
- 4" Double Solid Yellow Stripes with Type H Raised Pavement Markers @ 20'-0" o.c. (Tape, Type II or Thermoplastic Exrusion))
- 4" Yellow Edge Stripe with Type H Raised Pavement Markers @ 40'-0" o.c. (Tape, Type II or Thermoplastic Extrusion))
- 4" Double Solid White Stripes with Type C Raised Pavement Markers @ 20'-0" o.c. (Tape, Type I or Thermoplastic Extrusion)
- Lane Change Restriction Marking
  4 each Type A Raised Pavement Markers
  Type C Raised Pavement Markers @ 20'-0" o.c.
  4" White Stripe (Tape, Type I or Thermoplastic Extrusion)
- 4" or 8" White Edge Stripe with Type C Raised Pavement Markers @ 40'-0" o.c. (Tape, Type II or Thermoplastic Extrusion)
- 4" White Guide Lines (Tape, Type III or Thermoplastic Extrusion except for bus bays)
- Transverse Median Marking (Tape, Type II or Thermoplastic Extrusion)
- Transverse Shoulder Marking (Tape, Type II or Thermoplastic Extrusion)
- Channelizing Island or Deceleration Lane Gore (Tape, Type II or Thermoplastic Extrusion)
- Crosswalk and Stop Line. All Stop Lines shall be 10'-0" from Crosswalk unless otherwise noted. The circled number indicates the number of lanes for payment (Tape, Type III or Thermoplastic Extrusion)
- Pavement Arrow (Tape, Type III or Thermoplastic Extrusion)
- STOP — Pavement Word (Tape, Type III or Thermoplastic Extrusion)
- 4 Each Type J Raised Pavement Markers
  Type D Raised Pavement Markers @ 40'-0" o.c.
  Type H Raised Pavement Markers (Reflective Surface facing no-passing direction)
  4" Single Solid Yellow Stripe (Tape, Type I or Thermoplastic Extrusion)
- 10' 10' 10' 10' — Extension of Edge Line, 4" Wide x 2'-0" Long White Stripe @ 10'-0" o.c. w/Type C Markers @ 40'-0" o.c. (Tape, Type III or Thermoplastic Extrusion)
- Reflector Marker (RM-5) Mounted on New and Existing Metal Guardrail

NOTES

1. Layout of pavement markings and striping shall be done by the Contractor and approved by the Engineer prior to any installation work.
2. Existing pavement markings not incorporated in the final traffic pattern shall be removed as directed by the Engineer. Costs shall be incidental to the various pavement marking items.
3. Raised pavement markers shall not be installed within crosswalks.
4. Final locations of all signs shall be approved by the Engineer prior to any installation work.
5. Existing signs not shown on these plans shall remain as posted unless otherwise directed by the Engineer. Removal and disposal of existing signs and/or posts as designated on these plans shall be incidental to the various signing items.
6. Final locations of all Stop Lines shall be approved by the Engineer prior to installation.
7. All pavement striping shall be as noted on the legend or plans.
8. All preformed pavement marking tapes over existing pavement shall be applied with an approved primer as recommended by the tape manufacturer and as approved by the Engineer. The primer shall be allowed to dry to the tacky stage prior to tape application.
9. All Pedestrian warning signs with supplemental sign shall be on a fluorescent yellow-green retroflective backgroung with a legend and border.

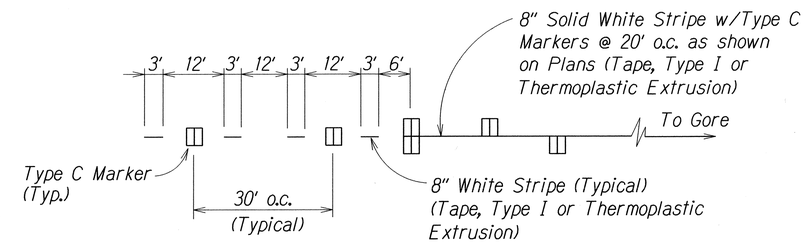

LANE DROP MARKING
Not to Scale

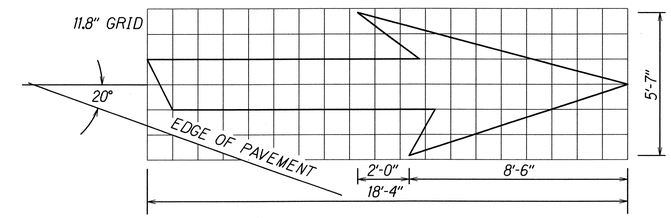

TYPE VI ARROW
RIGHT LANE DROP ARROW
(FOR LEFT LANE, USE MIRROR IMAGE)

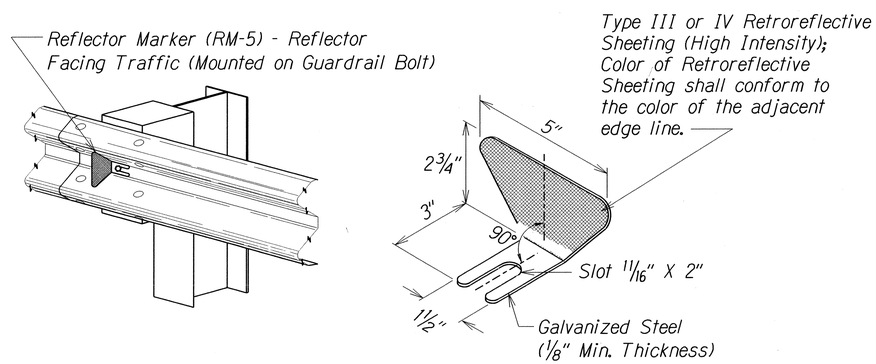

REFLECTOR MARKER (RM-5) DETAIL AND TYPICAL INSTALLATION

Note:
Reflector Markers (RM-5) mounted on guardrails shall be spaced every 25 feet. RM-5's shall not be installled on Terminal Sections. Furnishing and installing of each RM-5 shall be paid for under Contract Item No. 632.4200 - Reflector Marker (RM-5) mounted on new and existing guardrail. The Contractor shall be responsible for mounting RM-5's on all new and existing metal guardrails even when not shown on plans.

ORIGINAL PLAN	SURVEY PLOTTED BY	DATE
	DRAWN BY	
	TRACED BY	
NOTE BOOK	DESIGNED BY	
	QUANTITIES BY	
	CHECKED BY	

STATE OF HAWAII
DEPARTMENT OF TRANSPORTATION
HIGHWAYS DIVISION

PAVEMENT MARKING
LEGEND, DETAILS & NOTES

KAMEHAMEHA HIGHWAY RESURFACING
Dairy Road to Laiewai Bridge
Federal Aid Project No. NH-083-1(072)

Scale: As Noted — Date: Feb., 2015

SHEET No. T1 OF 32 SHEETS

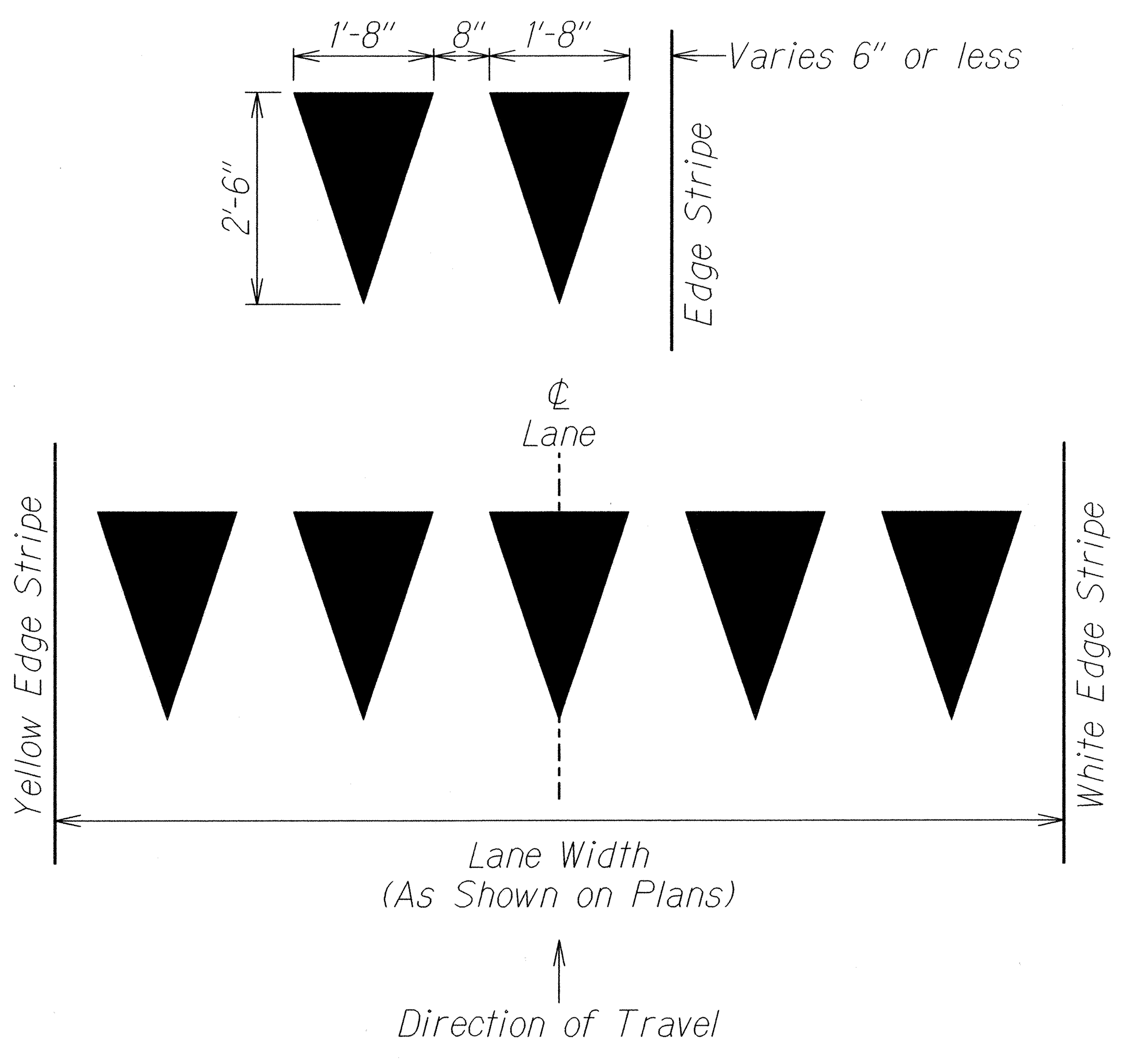

YIELD LINE

NEW TRAFFIC SIGNAL ASSEMBLY W/ LED SIGNAL LIGHTS & TRAFFIC SIGNAL BACK PLATE**		
STREET NAME/INTERSECTION	IN BOUND (IB)	OUT BOUND (OB)
Puuluana Street	1	1

** Replace existing mast arm mounted traffic signal head with new traffic signal head with LED optical units and traffic signal back plate.

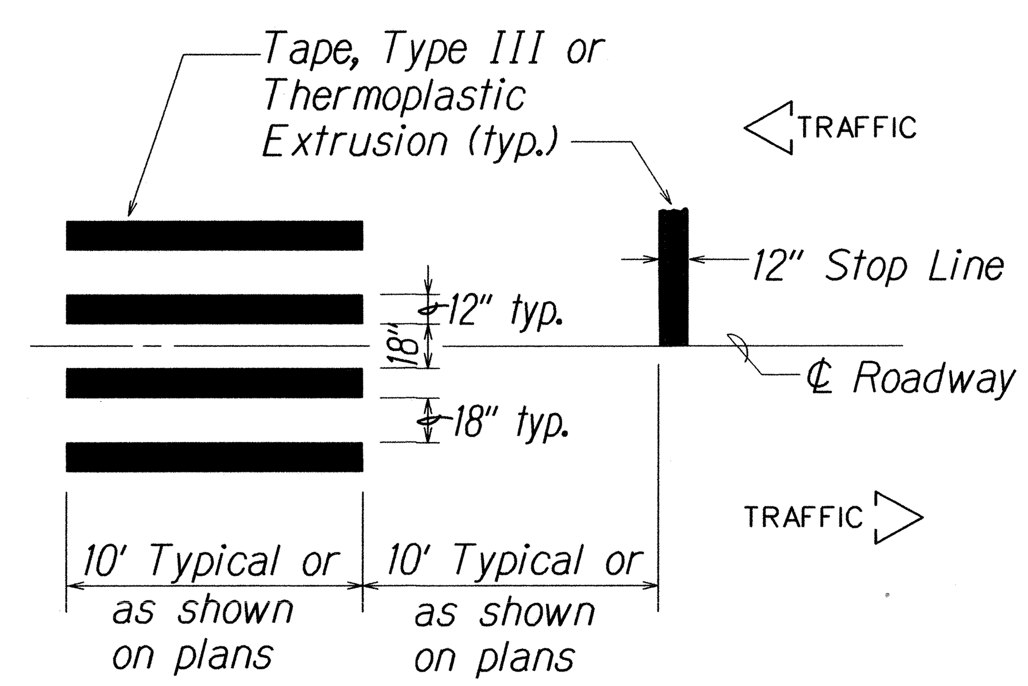

CROSSWALK STRIPING DETAIL

Not to Scale

ORIGINAL PLAN | SURVEY PLOTTED BY | DRAWN BY | TRACED BY | DESIGNED BY | QUANTITIES BY | CHECKED BY | DATE
NOTE BOOK

STATE OF HAWAII
DEPARTMENT OF TRANSPORTATION
HIGHWAYS DIVISION

PAVEMENT MARKING LEGEND, DETAILS & NOTES

KAMEHAMEHA HIGHWAY RESURFACING
Dairy Road to Laiewai Bridge
Federal Aid Project No. NH-083-1(072)

Scale: As Noted   Date: Feb., 2015

FED. ROAD DIST. NO.	STATE	FED. AID PROJ. NO.	FISCAL YEAR	SHEET NO.	TOTAL SHEETS
HAWAII	HAW.	NH-083-1(072)	2015	74	107

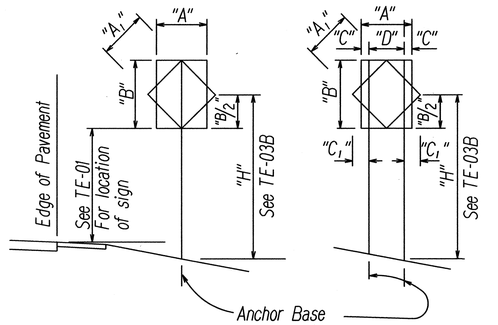

1 - POST
"A" or "A1" less than 36"

2 - POST
"A" or "A1" less than 60"

"A" or "A1"	"C"	"C1"
Less than 36"	6"	-
Greater than 36" and less than 48"	9"	19"
Greater than 48"	12"	24"

NOTE: Frame stiffeners are required when D is greater than 24" See General Notes.

TYPICAL INSTALLATION

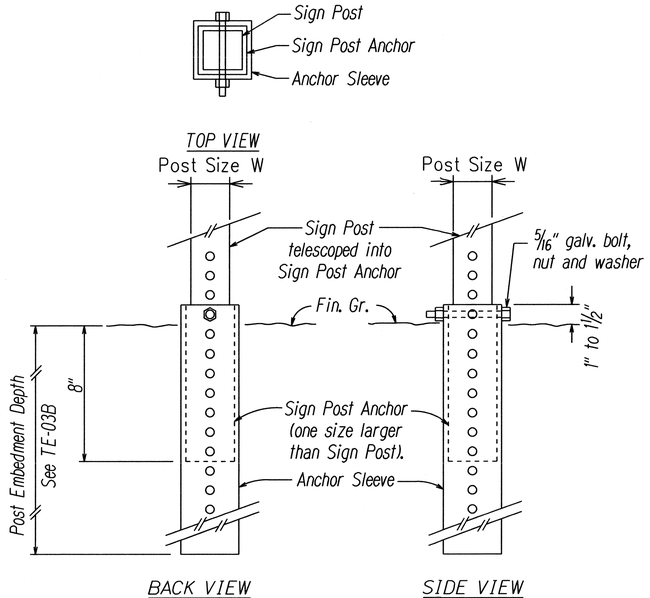

SIGN POST INSTALLATION

ANCHOR BASE DETAIL

GENERAL NOTES

1. Design Specifications:
   (A) Design shall conform w/ the latest AASHTO Standard Specifications for the Structural Supports for Highway Signs, Luminaires & Traffic Signals and its interim supplements and modifications by the Highways Division, Department of Transportation State of Hawaii.
   (B) Latest HDOT Memorandum with subject title "Design Criteria for Bridges and Structures."
2. Loads:
   (A) Basic Wind Speed: 105 mph.
   (B) Recurrence Interval of 10 years.
3. Materials:
   (A) Post shall conform to the Standard Specifications.
   (B) All connection bolts shall be AASHTO M164 bolts and anchor bolts shall be AASHTO M314-105 bolt.
   (C) Lap splice nuts and bolts shall be M180, with an ultimate tensile strength of 180 ksi, min.
   (D) Aluminum members and surfaces in contact with structural steel shall be isolated with neoprene material as approved by the Engineer.
4. General:
   (A) See General Notes on B-01, TE-01, and TE-03B for additional information.
   (B) All posts shall be 12 gage unless otherwise specified or shown on the plans.
   (C) Square tube posts shall be perforated with 7/16"ø holes, 1" o.c., 4 sides, along entire length of post.
   (D) All accessories, fittings and stiffener details (as required) shall be submitted to the Engineer for approval 20 days prior to installation.
   (E) Alternate designs in accordance with the plans and specifications shall use the Service Load Design Method and shall be stamped by a registered structural engineer of the State of Hawaii and submitted to the Engineer for approval.
   (F) All sign support posts shall be outside of the clear zone or shielded by an appropriate traffic barrier system. The traffic barrier system shall be submitted to the Engineer for his approval.
   (G) The Contractor shall use templates while installing the anchor bolts. Anchor bolts shall be vertical.
   (H) Excavation and backfill shall be considered incidental to the cost of the sign foundation.

ORIGINAL PLAN	SURVEY PLOTTED BY	DATE
	DRAWN BY X	
NOTE BOOK	TRACED BY	
	DESIGNED BY X	
	QUANTITIES BY	
	CHECKED BY	

STATE OF HAWAII
DEPARTMENT OF TRANSPORTATION
HIGHWAYS DIVISION

PAVEMENT MARKING
LEGEND, DETAILS & NOTES

KAMEHAMEHA HIGHWAY RESURFACING
Dairy Road to Laiewai Bridge
Federal Aid Project No. NH-083-1(072)

Scale: As Noted Date: Feb., 2015

SHEET No. T3 OF 32 SHEETS

FED. ROAD DIST. NO.	STATE	FED. AID PROJ. NO.	FISCAL YEAR	SHEET NO.	TOTAL SHEETS
HAWAII	HAW.	NH-083-1(072)	2015	75	107

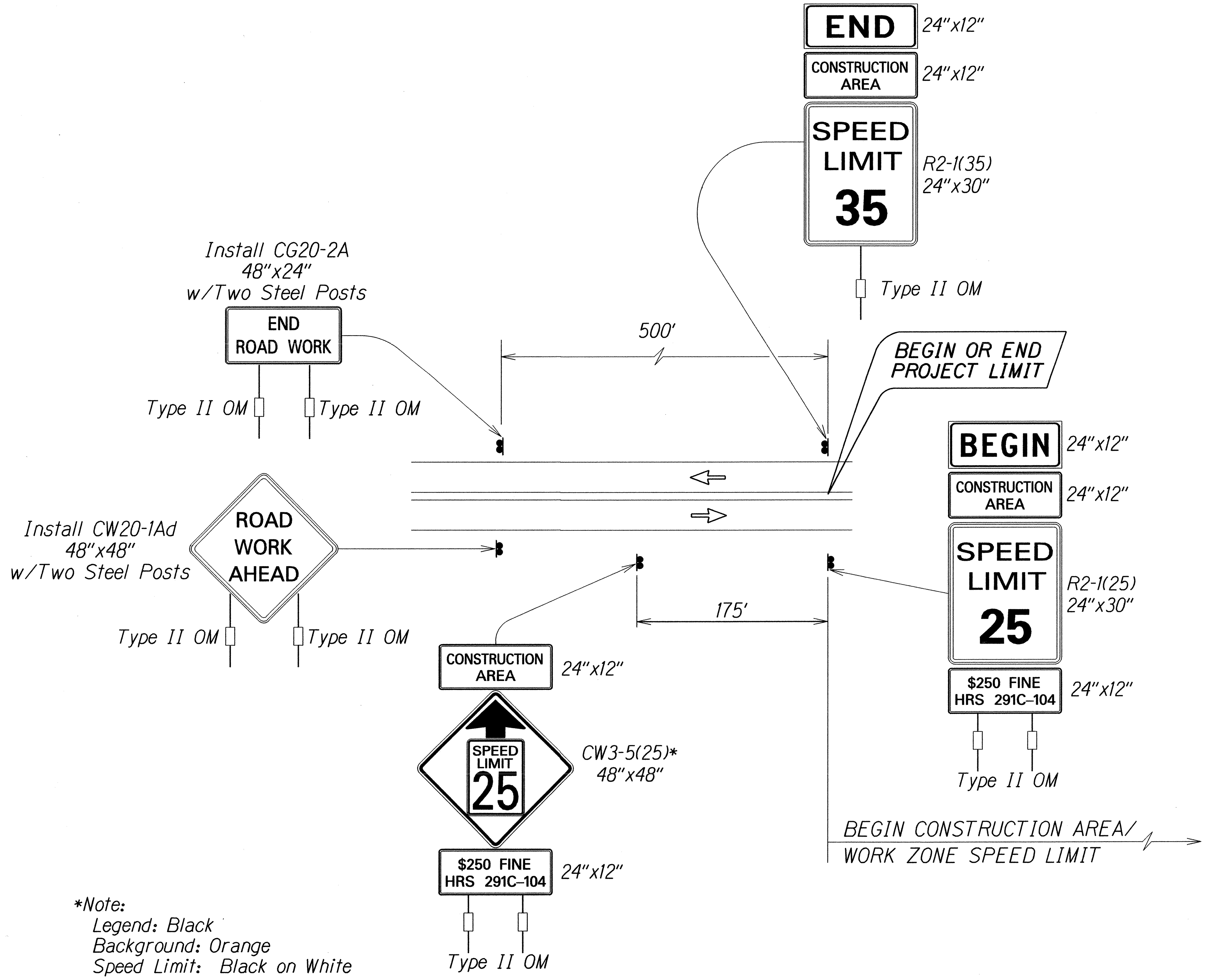

TYPICAL DETAIL FOR CONSTRUCTION SIGNS ON TWO LANE OR MULTILANE UNDIVIDED LOW SPEED HIGHWAY

Work Zone Notes:

1. This Work Zone Sign Plan is intended for use on long-term stationary work zones/construction phases (3 days or more). All work zones or construction phases less than 3 days duration will use Traffic Control Plans shown in Section 645 of the Standard Specifications and/or Special Provisions.
2. All existing regulatory speed limit signs with posts within the work zone/project limits shall be removed and replaced with work zone speed limit sign assemblies (R2-1(25) and CW3-5(25) with "CONSTRUCTION AREA" and "$250 FINE HRS 291C-104" Supplemental Signs).
3. Construction sign assemblies shall be installed on both the approaching and trailing ends of each work zone as shown on this plan.
4. Each construction warning sign shall have a minimum of two (2) Type II OM. Each work zone speed limit assembly shall have a minimum of one (1) Type II OM. Installation of each Type II OM shall be considered incidental to Item No. 645.0100 - Traffic Control.
5. Upon the completion of all physical work or as directed by the Engineer, all construction signs and work zone speed limit assemblies shall be removed. All speed limit signs and posts that were existing at the start of the project within the work zone/project limits shall be restored back to their original locations and configurations.
6. Placement of construction signs shall not obstruct the path of pedestrians and bicyclists.
7. The removal and restoration of existing regulatory speed limit signs with new posts along with the installation, maintenance and removal of work zone speed limit sign assemblies shall be considered incidental to Item No. 645.0100 - Traffic Control.

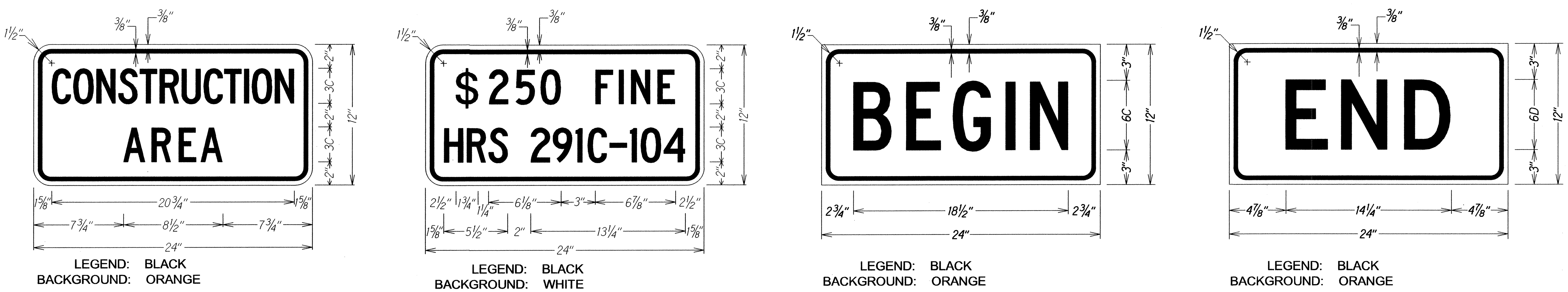

STATE OF HAWAII
DEPARTMENT OF TRANSPORTATION
HIGHWAYS DIVISION

LOW SPEED UNDIVIDED HIGHWAY
WORK ZONE SIGNING PLAN, NOTES & DETAILS

KAMEHAMEHA HIGHWAY RESURFACING
Dairy Road to Laiewai Bridge
Federal Aid Project No. NH-083-1(072)

Scale: As Noted Date: Feb., 2015

SHEET No. T4 OF 32 SHEETS

FED. ROAD DIST. NO.	STATE	FED. AID PROJ. NO.	FISCAL YEAR	SHEET NO.	TOTAL SHEETS
HAWAII	HAW.	NH-083-1(072)	2015	76	107

℄ STA. 345+00 TO ℄ STA. 381+26
Install Centerline Milled Rumble Strip;
See Detail on Plan Sheet No. T27.

℄ STA. 345+00 LT. TO ℄ STA. 362+43 LT.
Install Edgeline Milled Rumble Strip

℄ STA. 345+00 RT. TO ℄ STA. 375+04 RT.
Install Edgeline Milled Rumble Strip

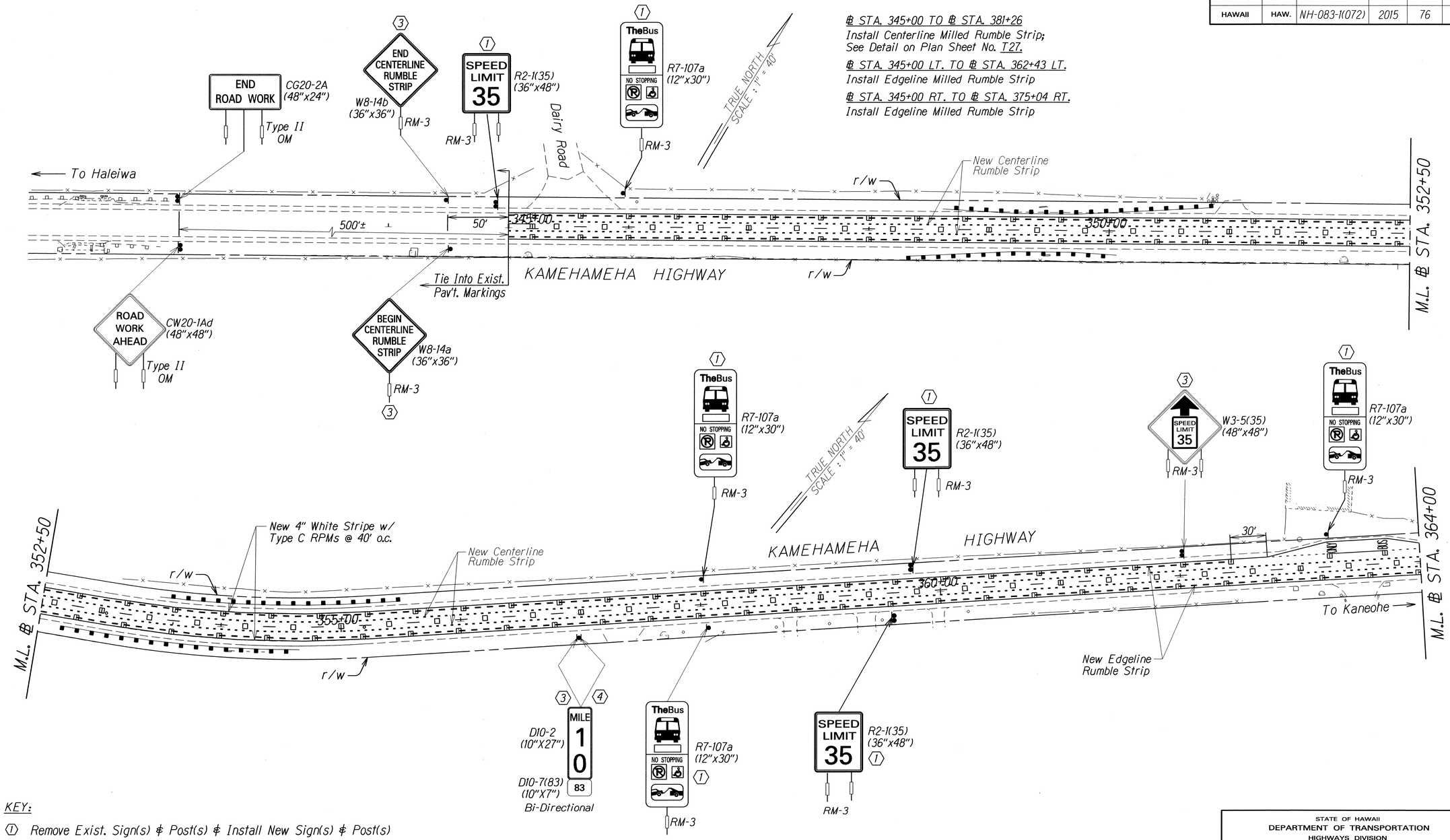

KEY:

1. Remove Exist. Sign(s) & Post(s) & Install New Sign(s) & Post(s)
2. Remove Exist. Sign(s) & Install New Sign(s)
3. Install New Sign(s) & Post(s)
4. Install New Sign(s)
5. Remove Exist. Sign(s) & Post(s)
6. Remove Exist. Sign(s)
7. Exist. Sign(s) & Post(s) to Remain
8. Relocate Exist. Sign(s) & Install New Post(s)

ORIGINAL PLAN	SURVEY PLOTTED BY	DATE
	DRAWN BY X	
	TRACED BY X	
NOTE BOOK	DESIGNED BY X	
	QUANTITIES BY	
No.	CHECKED BY	

STATE OF HAWAII
DEPARTMENT OF TRANSPORTATION
HIGHWAYS DIVISION

PAVEMENT MARKING PLAN & SIGNING PLAN

KAMEHAMEHA HIGHWAY RESURFACING
Dairy Road to Laiewai Bridge
Federal-Aid Project No. NH-083-1(072)

Scale: 1" = 40.0' Date: Feb., 2015

SHEET No. T5 OF 32 SHEETS

FED. ROAD DIST. NO.	STATE	FED. AID PROJ. NO.	FISCAL YEAR	SHEET NO.	TOTAL SHEETS
HAWAII	HAW.	NH-083-1(072)	2015	77	107

℄ STA. 345+00 TO ℄ STA. 381+26
Install Centerline Milled Rumble Strip;
See Detail on Plan Sheet No. T27.

℄ STA. 364+53 LT. TO ℄ STA. 375+23 LT.
Install Edgeline Milled Rumble Strip

℄ STA. 345+00 RT. TO ℄ STA. 375+04 RT.
Install Edgeline Milled Rumble Strip

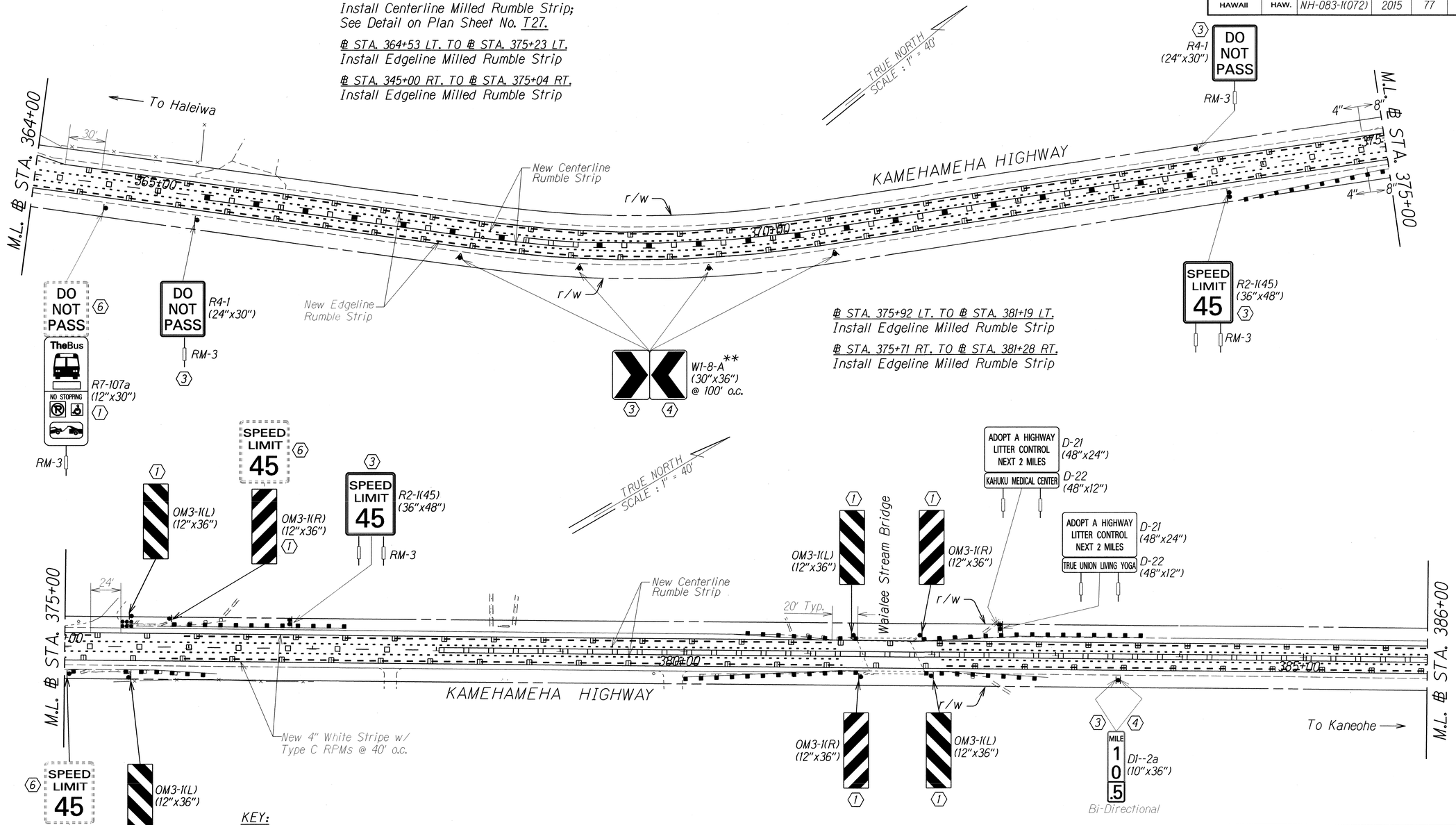

KEY:

1. Remove Exist. Sign(s) & Post(s) & Install New Sign(s) & Post(s)
2. Remove Exist. Sign(s) & Install New Sign(s)
3. Install New Sign(s) & Post(s)
4. Install New Sign(s)
5. Remove Exist. Sign(s) & Post(s)
6. Remove Exist. Sign(s)
7. Exist. Sign(s) & Post(s) to Remain
8. Relocate Exist. Sign(s) & Install New Post(s)

**FLUORESCENT YELLOW SIGN SHEETING

℄ STA. 382+08 TO ℄ STA. 424+05
Install Centerline Milled Rumble Strip;
See Detail on Plan Sheet No. T27.

℄ STA. 382+04 LT. TO ℄ STA. 400+60 LT.
Install Edgeline Milled Rumble Strip

℄ STA. 382+12 RT. TO ℄ STA. 387+50 RT.
Install Edgeline Milled Rumble Strip

ORIGINAL PLAN	SURVEY PLOTTED BY	DATE
	DRAWN BY	
	TRACED BY	
NOTE BOOK	DESIGNED BY	
	QUANTITIES BY	
	CHECKED BY	

STATE OF HAWAII
DEPARTMENT OF TRANSPORTATION
HIGHWAYS DIVISION

PAVEMENT MARKING PLAN & SIGNING PLAN

KAMEHAMEHA HIGHWAY RESURFACING
Dairy Road to Laiewai Bridge
Federal-Aid Project No. NH-083-1(072)

Scale: 1" = 40.0' Date: Feb., 2015

SHEET No. T6 OF 32 SHEETS

FED. ROAD DIST. NO.	STATE	FED. AID PROJ. NO.	FISCAL YEAR	SHEET NO.	TOTAL SHEETS
HAWAII	HAW.	NH-083-1(072)	2015	78	107

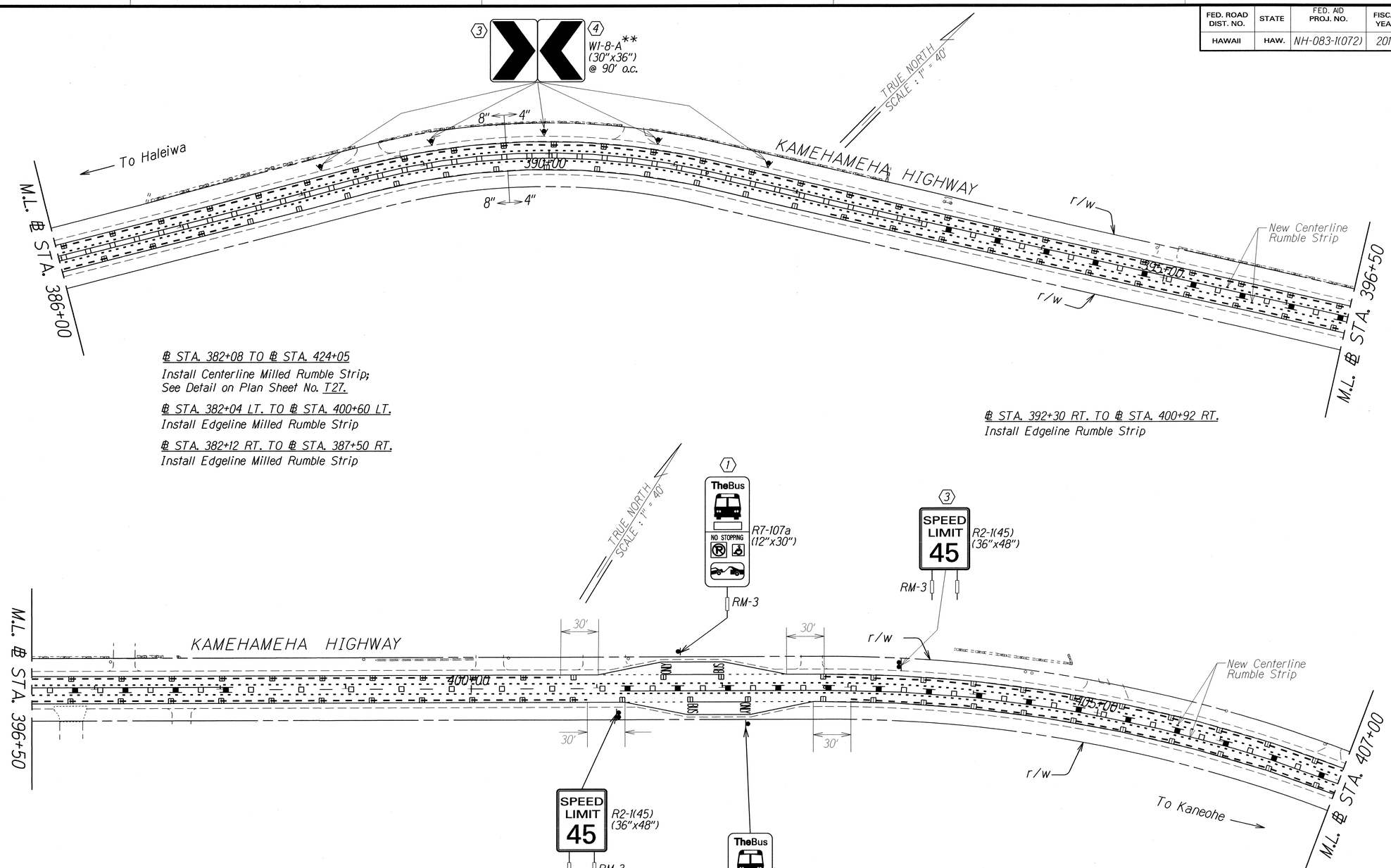

KEY:

① Remove Exist. Sign(s) & Post(s) & Install New Sign(s) & Post(s)
② Remove Exist. Sign(s) & Install New Sign(s)
③ Install New Sign(s) & Post(s)
④ Install New Sign(s)
⑤ Remove Exist. Sign(s) & Post(s)
⑥ Remove Exist. Sign(s)
⑦ Exist. Sign(s) & Post(s) to Remain
⑧ Relocate Exist. Sign(s) & Install New Post(s)

**FLUORESCENT YELLOW SIGN SHEETING

℄ STA. 402+80 LT. TO ℄ STA. 407+61 LT.
Install Edgeline Milled Rumble Strip

℄ STA. 403+02 RT. TO ℄ STA. 407+62 RT.
Install Edgeline Milled Rumble Strip

ORIGINAL PLAN	SURVEY PLOTTED BY	DATE
	DRAWN BY	
	TRACED BY	
NOTE BOOK	DESIGNED BY	
N.-	QUANTITIES BY	
	CHECKED BY	

STATE OF HAWAII
DEPARTMENT OF TRANSPORTATION
HIGHWAYS DIVISION

PAVEMENT MARKING PLAN & SIGNING PLAN

KAMEHAMEHA HIGHWAY RESURFACING
Dairy Road to Laiewai Bridge
Federal-Aid Project No. NH-083-1(072)

Scale: 1" = 40.0' Date: Feb., 2015

SHEET No. T7 OF 32 SHEETS

FED. ROAD DIST. NO.	STATE	FED. AID PROJ. NO.	FISCAL YEAR	SHEET NO.	TOTAL SHEETS
HAWAII	HAW.	NH-083-1(072)	2015	79	107

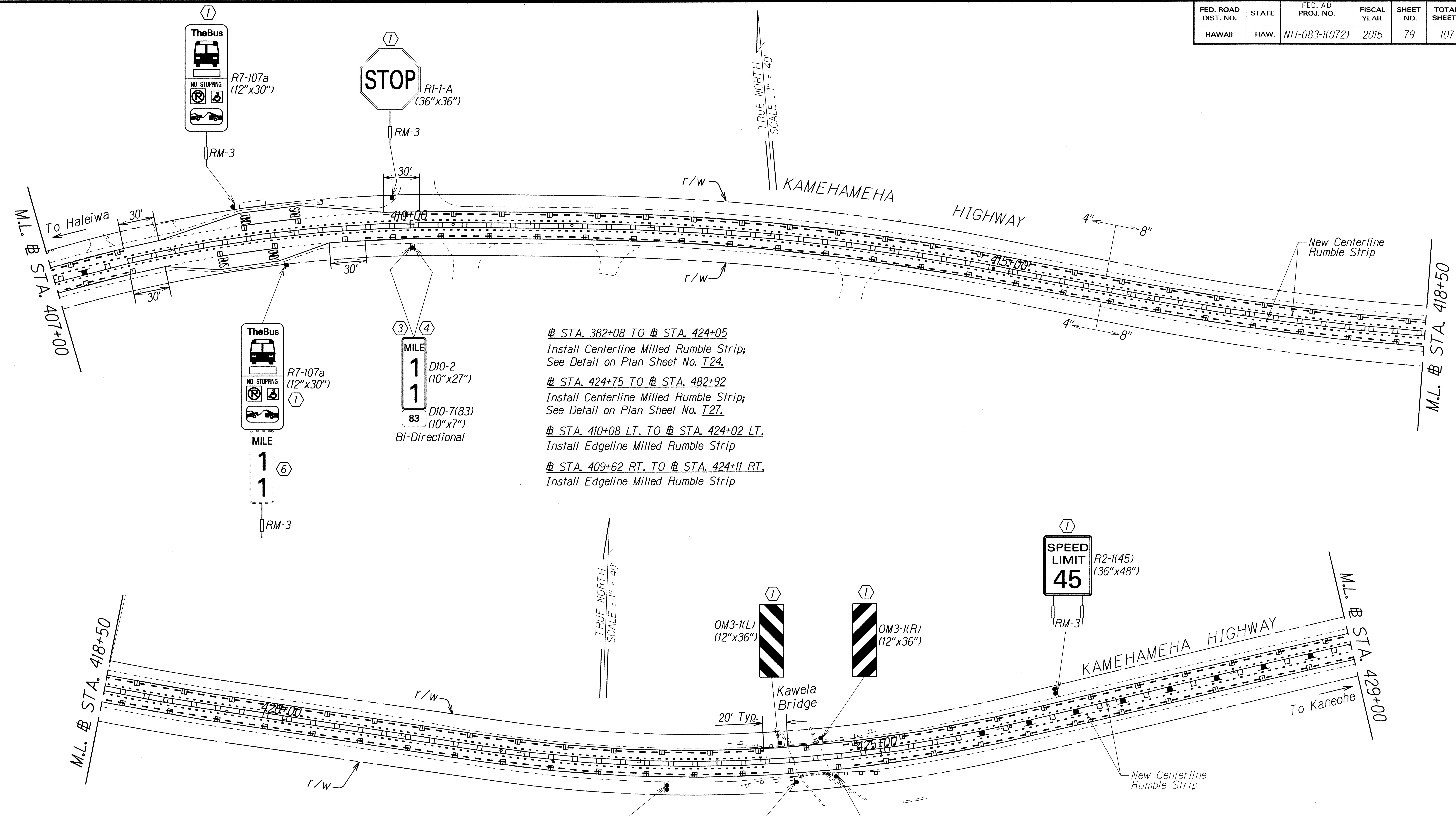

℄ STA. 382+08 TO ℄ STA. 424+05
Install Centerline Milled Rumble Strip; See Detail on Plan Sheet No. T24.

℄ STA. 424+75 TO ℄ STA. 482+92
Install Centerline Milled Rumble Strip; See Detail on Plan Sheet No. T27.

℄ STA. 410+08 LT. TO ℄ STA. 424+02 LT.
Install Edgeline Milled Rumble Strip

℄ STA. 409+62 RT. TO ℄ STA. 424+11 RT.
Install Edgeline Milled Rumble Strip

℄ STA. 424+70 LT. TO ℄ STA. 481+80 LT.
Install Edgeline Milled Rumble Strip

℄ STA. 424+77 RT. TO ℄ STA. 429+42 RT.
Install Edgeline Milled Rumble Strip

KEY:

1. Remove Exist. Sign(s) & Post(s) & Install New Sign(s) & Post(s)
2. Remove Exist. Sign(s) & Install New Sign(s)
3. Install New Sign(s) & Post(s)
4. Install New Sign(s)
5. Remove Exist. Sign(s) & Post(s)
6. Remove Exist. Sign(s)
7. Exist. Sign(s) & Post(s) to Remain
8. Relocate Exist. Sign(s) & Install New Post(s)

STATE OF HAWAII
DEPARTMENT OF TRANSPORTATION
HIGHWAYS DIVISION

PAVEMENT MARKING PLAN & SIGNING PLAN

KAMEHAMEHA HIGHWAY RESURFACING
Dairy Road to Laiewai Bridge
Federal-Aid Project No. NH-083-1(072)

Scale: 1" = 40.0'   Date: Feb., 2015

SHEET No. T8 OF 32 SHEETS

FED. ROAD DIST. NO.	STATE	FED. AID PROJ. NO.	FISCAL YEAR	SHEET NO.	TOTAL SHEETS
HAWAII	HAW.	NH-083-1(072)	2015	80	107

℄ STA. 424+70 LT. TO ℄ STA. 481+80 LT.
Install Edgeline Milled Rumble Strip

℄ STA. 432+00 RT. TO ℄ STA. 484+80 RT.
Install Edgeline Milled Rumble Strip

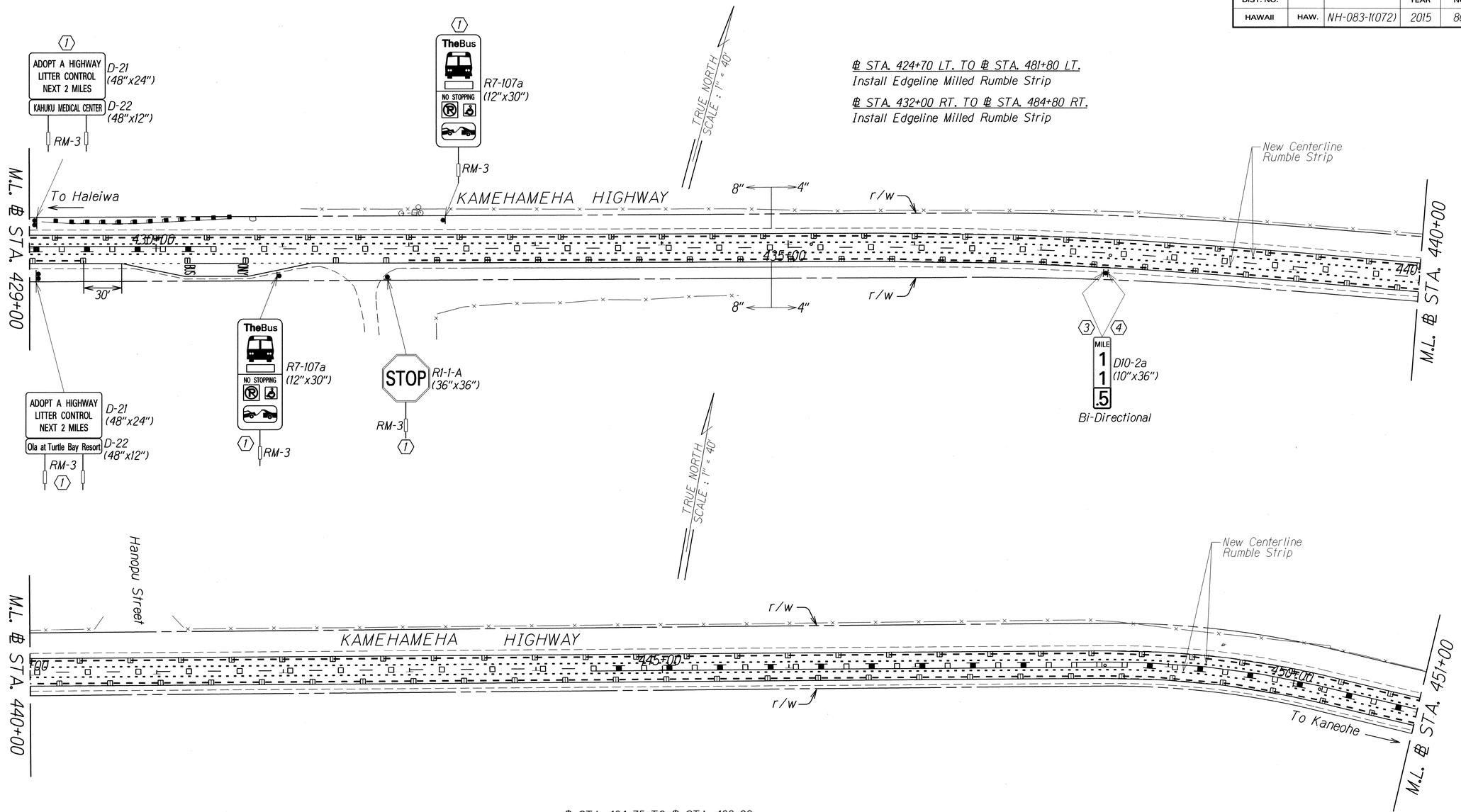

℄ STA. 424+75 TO ℄ STA. 482+92
Install Centerline Milled Rumble Strip;
See Detail on Plan Sheet No. T27.

KEY:

1. Remove Exist. Sign(s) & Post(s) & Install New Sign(s) & Post(s)
2. Remove Exist. Sign(s) & Install New Sign(s)
3. Install New Sign(s) & Post(s)
4. Install New Sign(s)
5. Remove Exist. Sign(s) & Post(s)
6. Remove Exist. Sign(s)
7. Exist. Sign(s) & Post(s) to Remain
8. Relocate Exist. Sign(s) & Install New Post(s)

ORIGINAL PLAN	SURVEY PLOTTED BY	DATE
	DRAWN BY	
	TRACED BY	
NOTE BOOK	DESIGNED BY	
	QUANTITIES BY	
No.	CHECKED BY	

STATE OF HAWAII
DEPARTMENT OF TRANSPORTATION
HIGHWAYS DIVISION

PAVEMENT MARKING PLAN & SIGNING PLAN

KAMEHAMEHA HIGHWAY RESURFACING
Dairy Road to Laiewai Bridge
Federal-Aid Project No. NH-083-1(072)

Scale: 1" = 40.0' Date: Feb., 2015

SHEET No. T9 OF 32 SHEETS

FED. ROAD DIST. NO.	STATE	FED. AID PROJ. NO.	FISCAL YEAR	SHEET NO.	TOTAL SHEETS
HAWAII	HAW.	NH-083-1(072)	2015	81	107

℄ STA. 424+70 LT. TO ℄ STA. 481+80 LT.
Install Edgeline Milled Rumble Strip

℄ STA. 432+00 RT. TO ℄ STA. 484+80 RT.
Install Edgeline Milled Rumble Strip

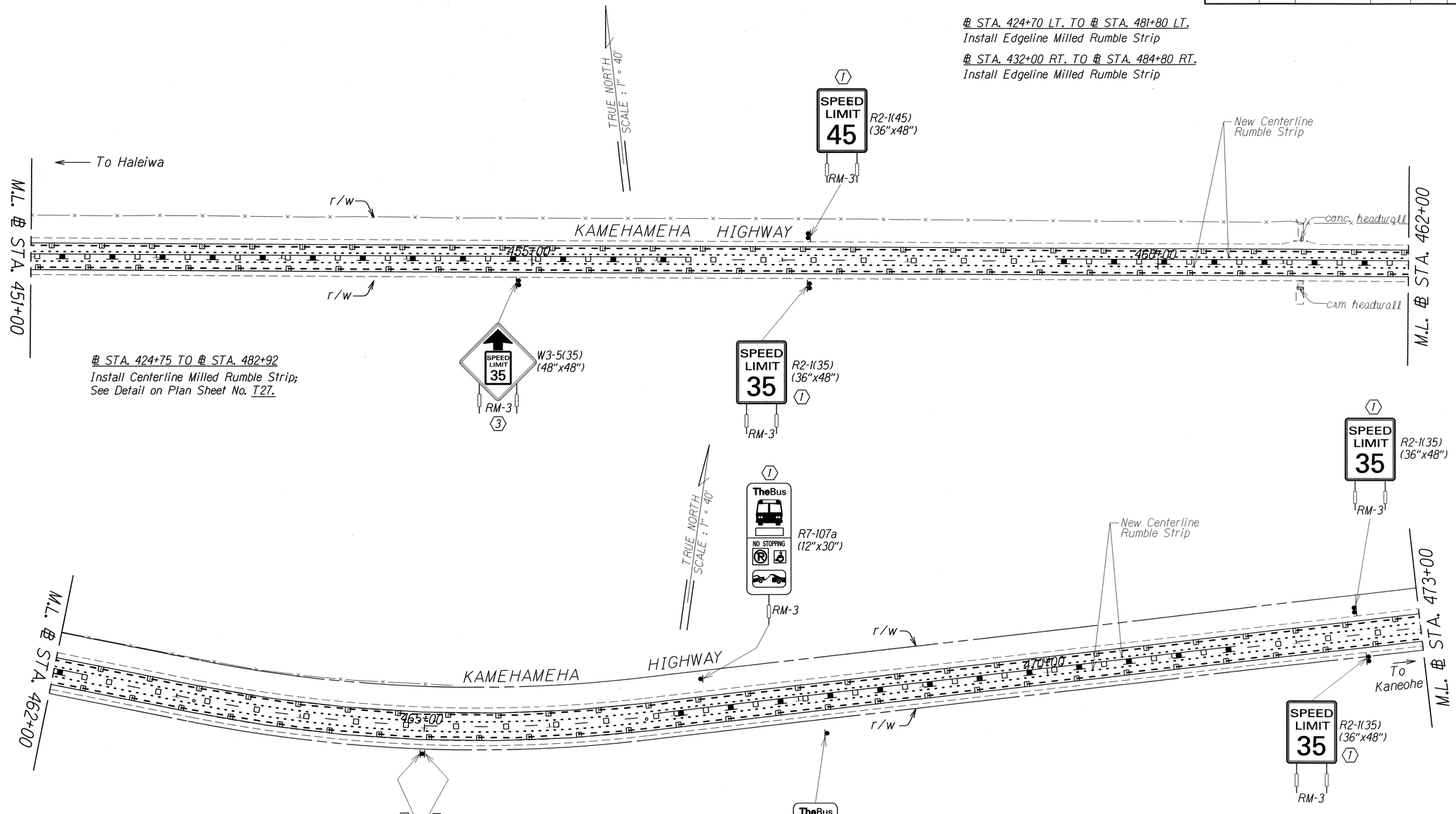

℄ STA. 424+75 TO ℄ STA. 482+92
Install Centerline Milled Rumble Strip;
See Detail on Plan Sheet No. T27.

KEY:

1. Remove Exist. Sign(s) & Post(s) & Install New Sign(s) & Post(s)
2. Remove Exist. Sign(s) & Install New Sign(s)
3. Install New Sign(s) & Post(s)
4. Install New Sign(s)
5. Remove Exist. Sign(s) & Post(s)
6. Remove Exist. Sign(s)
7. Exist. Sign(s) & Post(s) to Remain
8. Relocate Exist. Sign(s) & Install New Post(s)

ORIGINAL PLAN	SURVEY PLOTTED BY	DATE
	DRAWN BY	
	TRACED BY	
NOTE BOOK	DESIGNED BY	
	QUANTITIES BY	
	CHECKED BY	

STATE OF HAWAII
DEPARTMENT OF TRANSPORTATION
HIGHWAYS DIVISION

PAVEMENT MARKING PLAN & SIGNING PLAN

KAMEHAMEHA HIGHWAY RESURFACING
Dairy Road to Laiewai Bridge
Federal-Aid Project No. NH-083-1(072)

Scale: 1" = 40.0' Date: Feb., 2014

SHEET No. T10 OF 32 SHEETS

FED. ROAD DIST. NO.	STATE	FED. AID PROJ. NO.	FISCAL YEAR	SHEET NO.	TOTAL SHEETS
HAWAII	HAW.	NH-083-1(072)	2015	82	107

KEY:

1. Remove Exist. Sign(s) & Post(s) & Install New Sign(s) & Post(s)
2. Remove Exist. Sign(s) & Install New Sign(s)
3. Install New Sign(s) & Post(s)
4. Install New Sign(s)
5. Remove Exist. Sign(s) & Post(s)
6. Remove Exist. Sign(s)
7. Exist. Sign(s) & Post(s) to Remain
8. Relocate Exist. Sign(s) & Install New Post(s)

℄ STA. 424+70 LT. TO ℄ STA. 481+80 LT.
Install Edgeline Milled Rumble Strip

℄ STA. 432+00 RT. TO ℄ STA. 484+80 RT.
Install Edgeline Milled Rumble Strip

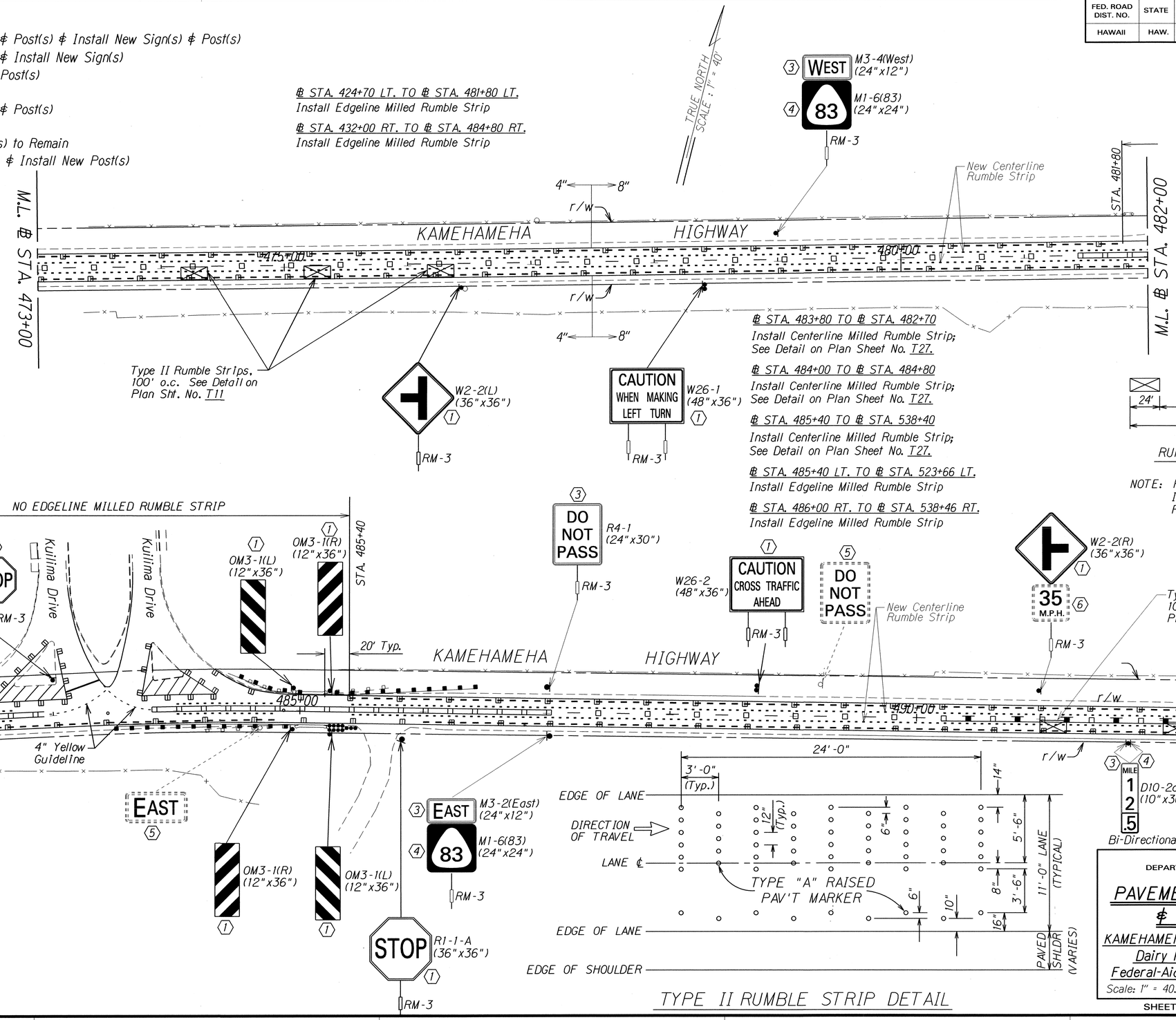

TYPE II RUMBLE STRIP DETAIL

STATE OF HAWAII
DEPARTMENT OF TRANSPORTATION
HIGHWAYS DIVISION

PAVEMENT MARKING PLAN & SIGNING PLAN

KAMEHAMEHA HIGHWAY RESURFACING
Dairy Road to Laiewai Bridge
Federal-Aid Project No. NH-083-1(072)

Scale: 1" = 40.0' Date: Feb., 2015

SHEET No. T11 OF 32 SHEETS

ORIGINAL PLAN | SURVEY PLOTTED BY | DRAWN BY | TRACED BY | DESIGNED BY | QUANTITIES BY | CHECKED BY | DATE
NOTE BOOK No.

FED. ROAD DIST. NO.	STATE	FED. AID PROJ. NO.	FISCAL YEAR	SHEET NO.	TOTAL SHEETS
HAWAII	HAW.	NH-083-1(072)	2015	83	107

℄ STA. 485+40 TO ℄ STA. 538+40
Install Centerline Milled Rumble Strip; See Detail on Plan Sheet No. T27.

℄ STA. 485+40 LT. TO ℄ STA. 523+66 LT.
Install Edgeline Milled Rumble Strip

℄ STA. 486+00 RT. TO ℄ STA. 538+46 RT.
Install Edgeline Milled Rumble Strip

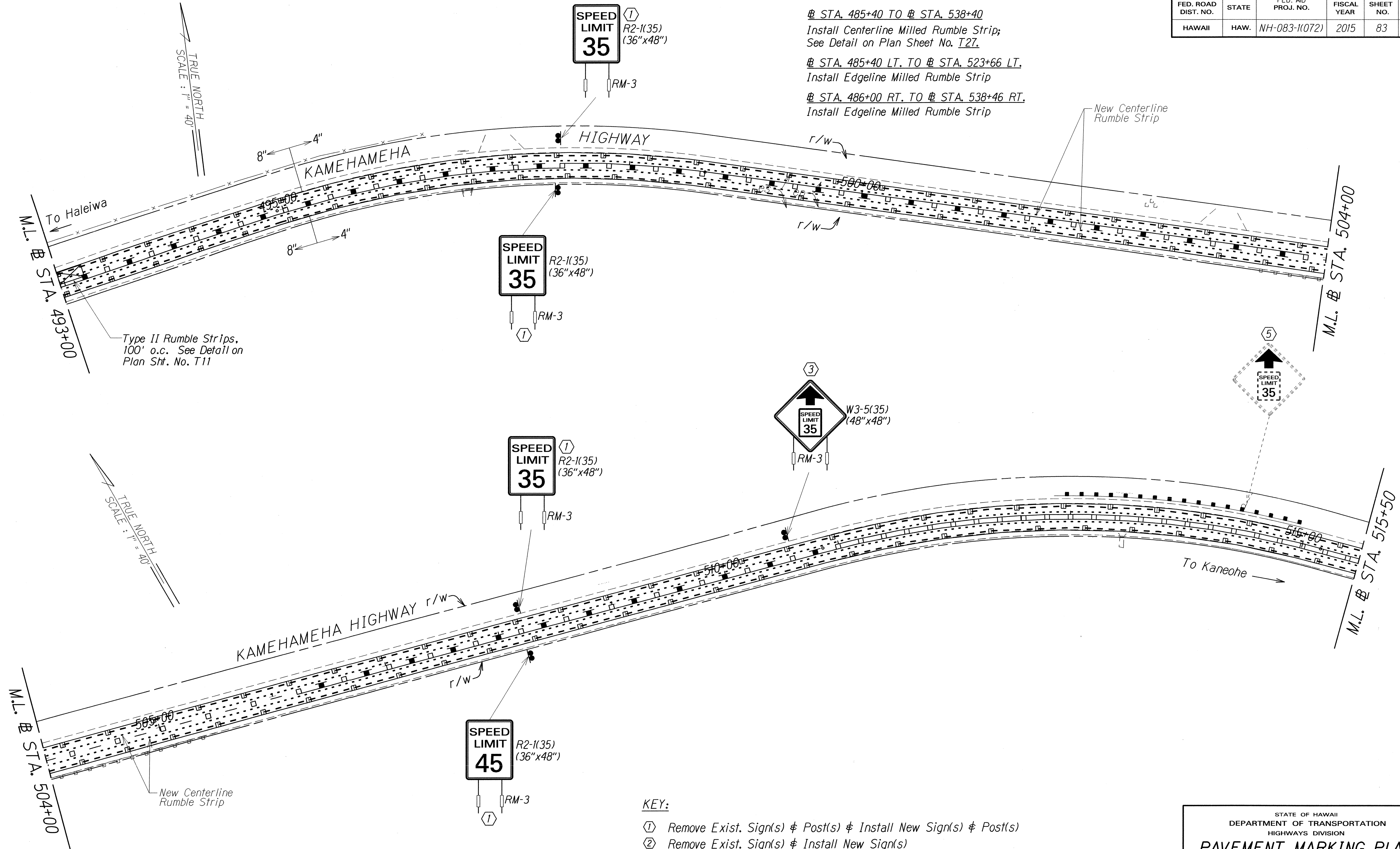

KEY:

1. Remove Exist. Sign(s) & Post(s) & Install New Sign(s) & Post(s)
2. Remove Exist. Sign(s) & Install New Sign(s)
3. Install New Sign(s) & Post(s)
4. Install New Sign(s)
5. Remove Exist. Sign(s) & Post(s)
6. Remove Exist. Sign(s)
7. Exist. Sign(s) & Post(s) to Remain
8. Relocate Exist. Sign(s) & Install New Post(s)

STATE OF HAWAII
DEPARTMENT OF TRANSPORTATION
HIGHWAYS DIVISION

PAVEMENT MARKING PLAN & SIGNING PLAN

KAMEHAMEHA HIGHWAY RESURFACING
Dairy Road to Laiewai Bridge
Federal-Aid Project No. NH-083-1(072)

Scale: 1" = 40.0' Date: Feb., 2015

SHEET No. T12 OF 32 SHEETS

ORIGINAL PLAN — SURVEY PLOTTED BY, DRAWN BY, TRACED BY, DESIGNED BY, QUANTITIES BY, CHECKED BY — DATE — NOTE BOOK

FED. ROAD DIST. NO.	STATE	FED. AID PROJ. NO.	FISCAL YEAR	SHEET NO.	TOTAL SHEETS
HAWAII	HAW.	NH-083-1(072)	2015	84	107

℄ STA. 485+40 TO ℄ STA. 538+40
Install Centerline Milled Rumble Strip;
See Detail on Plan Sheet No. T27.

℄ STA. 485+40 LT. TO ℄ STA. 523+66 LT.
Install Edgeline Milled Rumble Strip

℄ STA. 486+00 RT. TO ℄ STA. 538+46 RT.
Install Edgeline Milled Rumble Strip

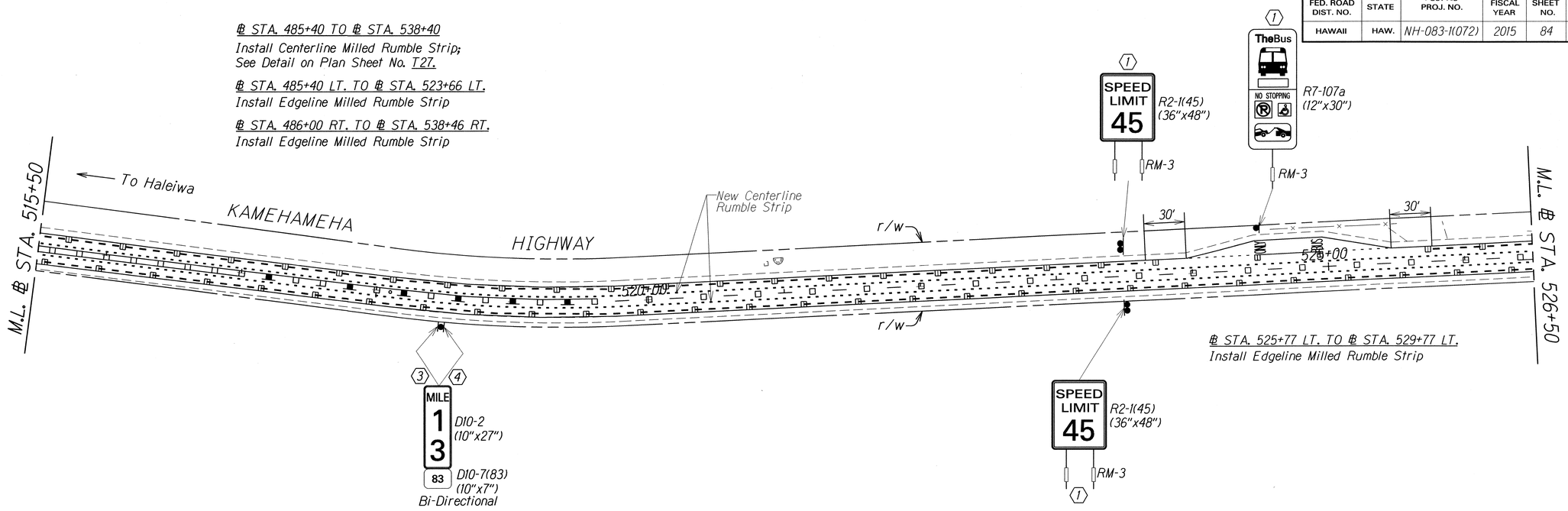

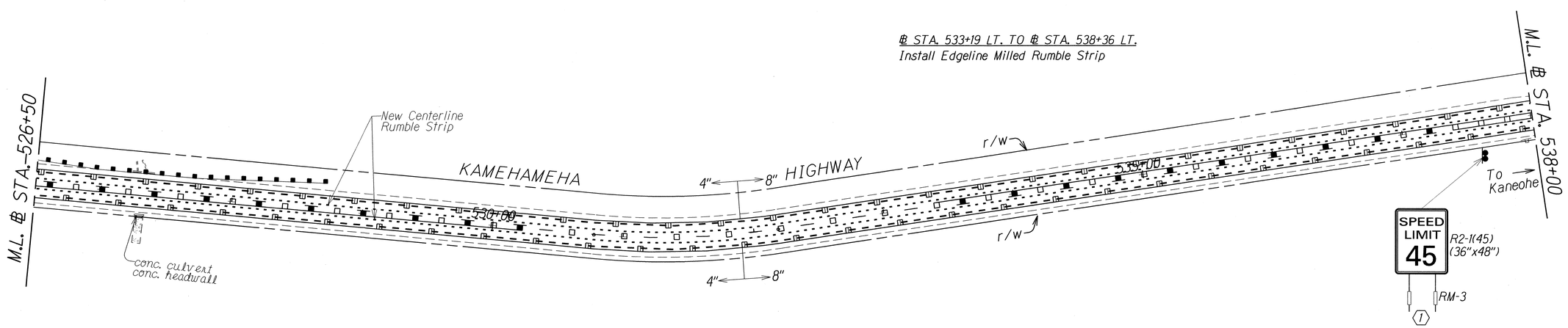

KEY:

1. Remove Exist. Sign(s) & Post(s) & Install New Sign(s) & Post(s)
2. Remove Exist. Sign(s) & Install New Sign(s)
3. Install New Sign(s) & Post(s)
4. Install New Sign(s)
5. Remove Exist. Sign(s) & Post(s)
6. Remove Exist. Sign(s)
7. Exist. Sign(s) & Post(s) to Remain
8. Relocate Exist. Sign(s) & Install New Post(s)

ORIGINAL PLAN	SURVEY PLOTTED BY	DATE
	DRAWN BY	
	TRACED BY	
NOTE BOOK	DESIGNED BY	
	QUANTITIES BY	
	CHECKED BY	

STATE OF HAWAII
DEPARTMENT OF TRANSPORTATION
HIGHWAYS DIVISION

PAVEMENT MARKING PLAN & SIGNING PLAN

KAMEHAMEHA HIGHWAY RESURFACING
Dairy Road to Laiewai Bridge
Federal-Aid Project No. NH-083-1(072)

Scale: 1" = 40.0' Date: Feb., 2015

SHEET No. T13 OF 32 SHEETS

FED. ROAD DIST. NO.	STATE	FED. AID PROJ. NO.	FISCAL YEAR	SHEET NO.	TOTAL SHEETS
HAWAII	HAW.	NH-083-1(072)	2015	85	107

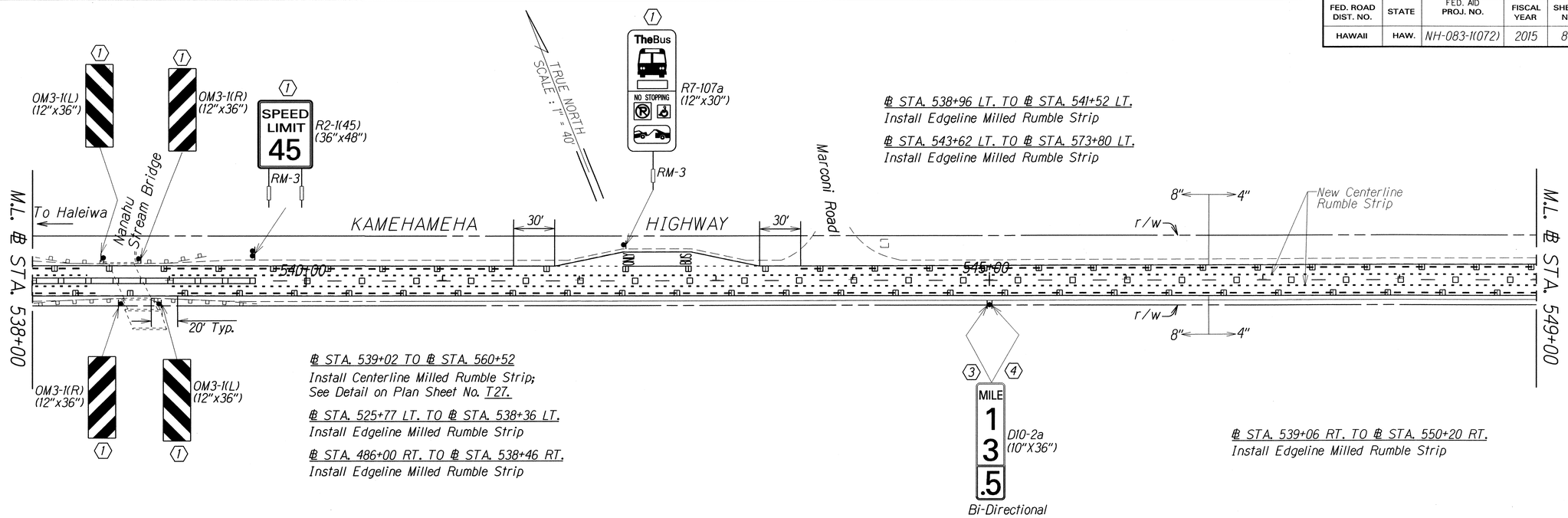

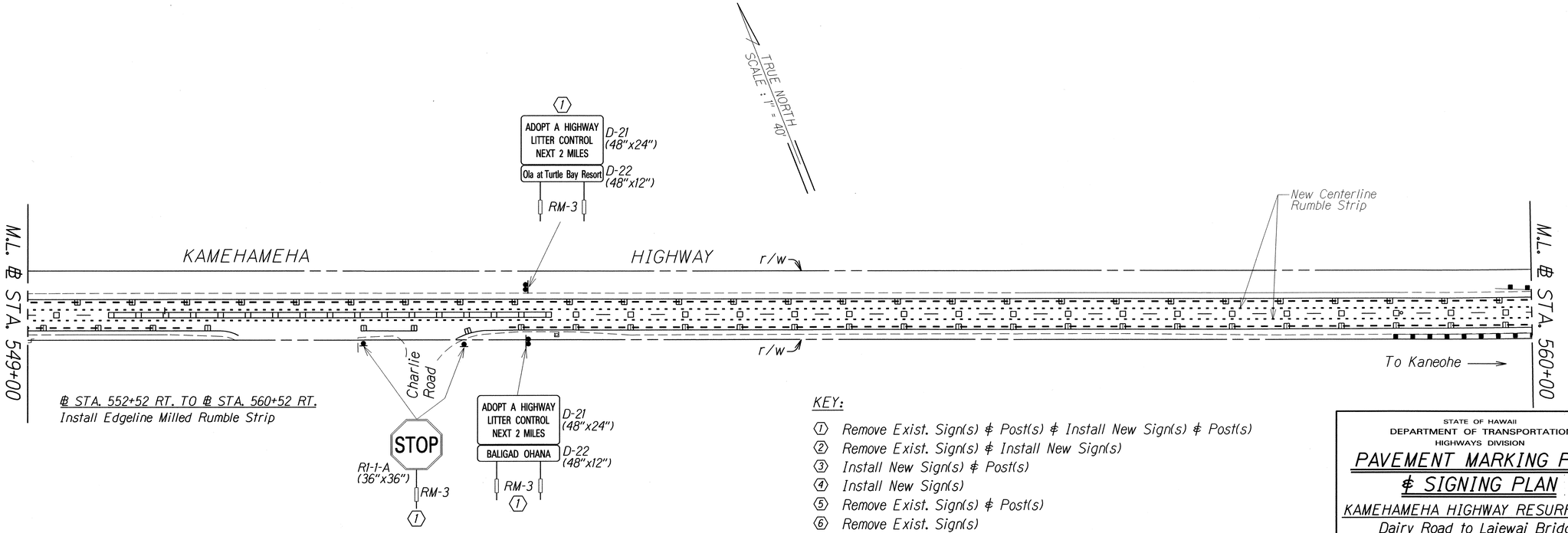

KEY:

1. Remove Exist. Sign(s) & Post(s) & Install New Sign(s) & Post(s)
2. Remove Exist. Sign(s) & Install New Sign(s)
3. Install New Sign(s) & Post(s)
4. Install New Sign(s)
5. Remove Exist. Sign(s) & Post(s)
6. Remove Exist. Sign(s)
7. Exist. Sign(s) & Post(s) to Remain
8. Relocate Exist. Sign(s) & Install New Post(s)

STATE OF HAWAII
DEPARTMENT OF TRANSPORTATION
HIGHWAYS DIVISION

PAVEMENT MARKING PLAN & SIGNING PLAN

KAMEHAMEHA HIGHWAY RESURFACING
Dairy Road to Laiewai Bridge
Federal-Aid Project No. NH-083-1(072)

Scale: 1" = 40.0' Date: Feb., 2015

SHEET No. T14 OF 32 SHEETS

ORIGINAL PLAN	SURVEY PLOTTED BY	DATE
	DRAWN BY	
	TRACED BY	
NOTE BOOK	DESIGNED BY	
No. 74,76	QUANTITIES BY	
	CHECKED BY	

FED. ROAD DIST. NO.	STATE	FED. AID PROJ. NO.	FISCAL YEAR	SHEET NO.	TOTAL SHEETS
HAWAII	HAW.	NH-083-1(072)	2015	86	107

℄ STA. 539+02 TO ℄ STA. 560+52
Install Centerline Milled Rumble Strip;
See Detail on Plan Sheet No. T27.

℄ STA. 543+62 LT. TO ℄ STA. 560+52 LT.
Install Edgeline Milled Rumble Strip

℄ STA. 552+52 RT. TO ℄ STA. 560+52 RT.
Install Edgeline Milled Rumble Strip

℄ STA. 561+17 TO ℄ STA. 573+90
Install Centerline Milled Rumble Strip;
See Detail on Plan Sheet No. T27.

℄ STA. 561+17 LT. TO ℄ STA. 573+80 LT.
Install Edgeline Milled Rumble Strip

℄ STA. 561+17 RT. TO ℄ STA. 575+80 RT.
Install Edgeline Milled Rumble Strip

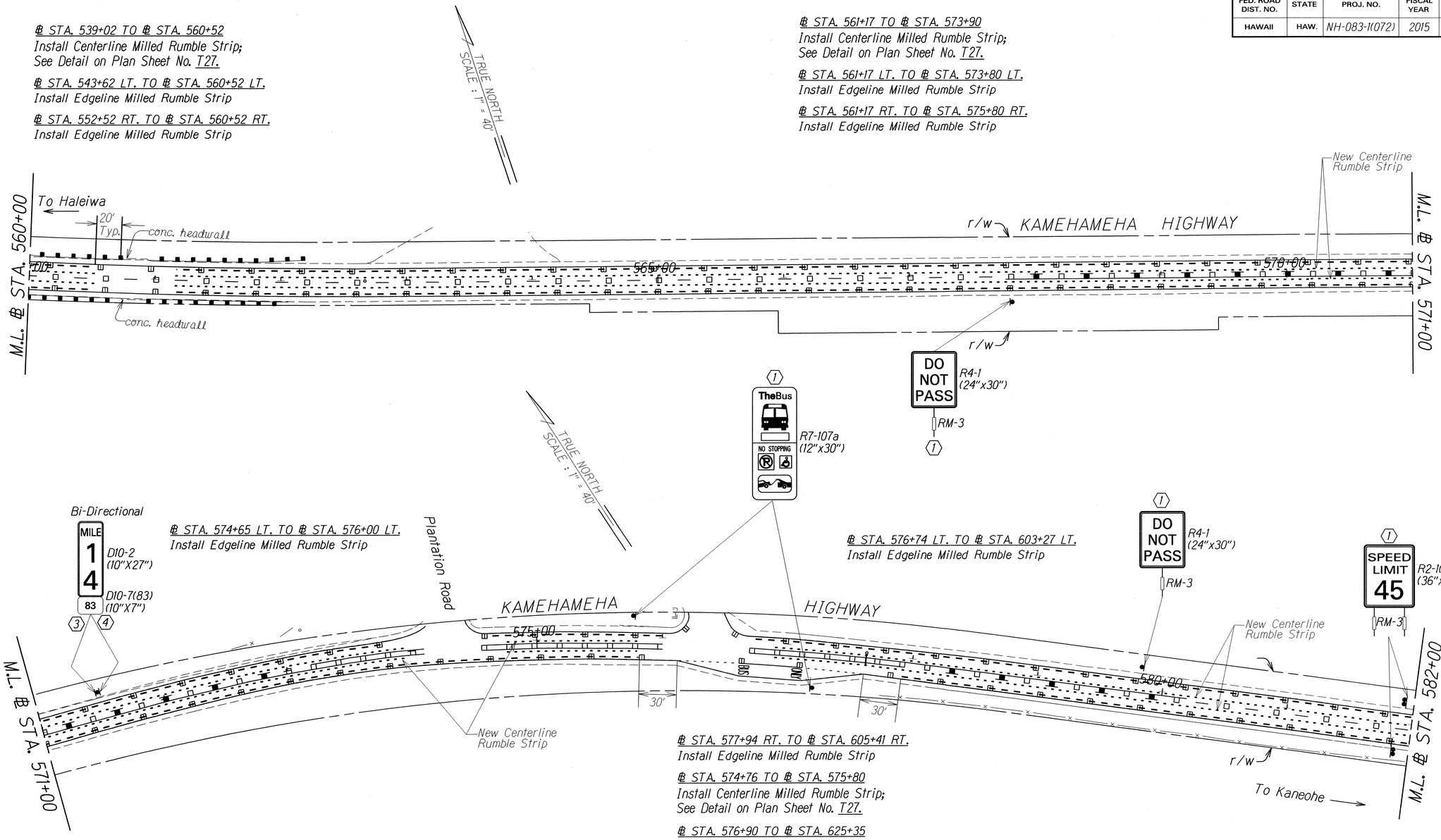

℄ STA. 574+65 LT. TO ℄ STA. 576+00 LT.
Install Edgeline Milled Rumble Strip

℄ STA. 576+74 LT. TO ℄ STA. 603+27 LT.
Install Edgeline Milled Rumble Strip

℄ STA. 577+94 RT. TO ℄ STA. 605+41 RT.
Install Edgeline Milled Rumble Strip

℄ STA. 574+76 TO ℄ STA. 575+80
Install Centerline Milled Rumble Strip;
See Detail on Plan Sheet No. T27.

℄ STA. 576+90 TO ℄ STA. 625+35
Install Centerline Milled Rumble Strip;
See Detail on Plan Sheet No. T27.

KEY:

1. Remove Exist. Sign(s) & Post(s) & Install New Sign(s) & Post(s)
2. Remove Exist. Sign(s) & Install New Sign(s)
3. Install New Sign(s) & Post(s)
4. Install New Sign(s)
5. Remove Exist. Sign(s) & Post(s)
6. Remove Exist. Sign(s)
7. Exist. Sign(s) & Post(s) to Remain
8. Relocate Exist. Sign(s) & Install New Post(s)

ORIGINAL PLAN	SURVEY PLOTTED BY	DATE
	DRAWN BY	
	TRACED BY	
NOTE BOOK	DESIGNED BY	
	QUANTITIES BY	
No.	CHECKED BY	

STATE OF HAWAII
DEPARTMENT OF TRANSPORTATION
HIGHWAYS DIVISION

PAVEMENT MARKING PLAN & SIGNING PLAN

KAMEHAMEHA HIGHWAY RESURFACING
Dairy Road to Laiewai Bridge
Federal-Aid Project No. NH-083-1(072)

Scale: 1" = 40.0' Date: Feb., 2015

SHEET No. T15 OF 32 SHEETS

FED. ROAD DIST. NO.	STATE	FED. AID PROJ. NO.	FISCAL YEAR	SHEET NO.	TOTAL SHEETS
HAWAII	HAW.	NH-083-1(072)	2015	87	107

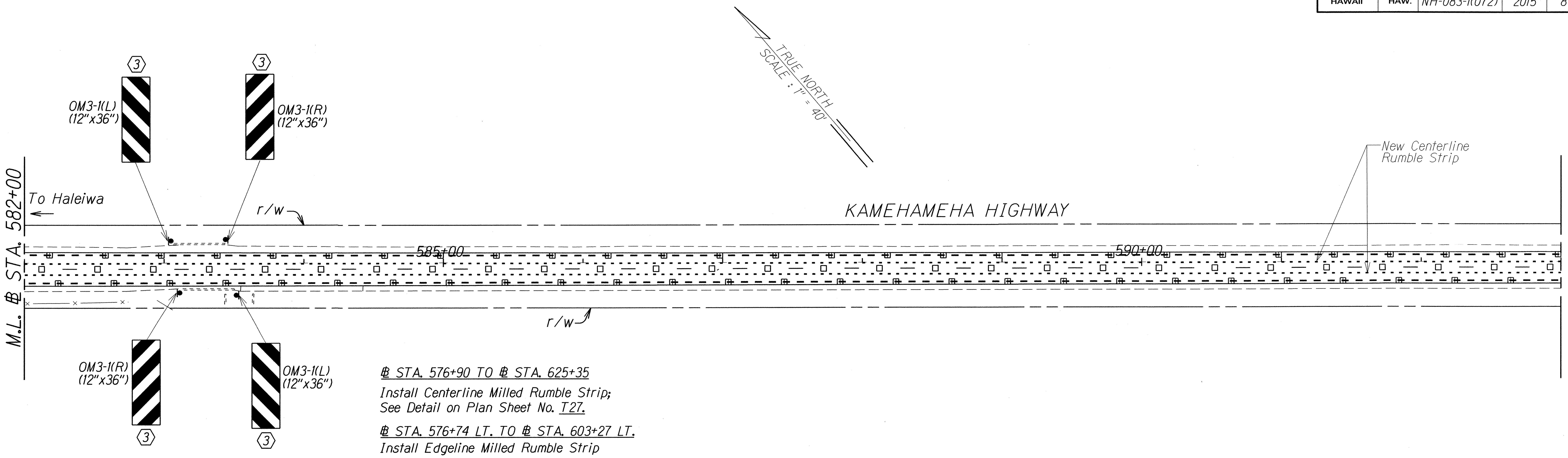

℄ STA. 576+90 TO ℄ STA. 625+35
Install Centerline Milled Rumble Strip; See Detail on Plan Sheet No. T27.

℄ STA. 576+74 LT. TO ℄ STA. 603+27 LT.
Install Edgeline Milled Rumble Strip

℄ STA. 577+94 RT. TO ℄ STA. 605+41 RT.
Install Edgeline Milled Rumble Strip

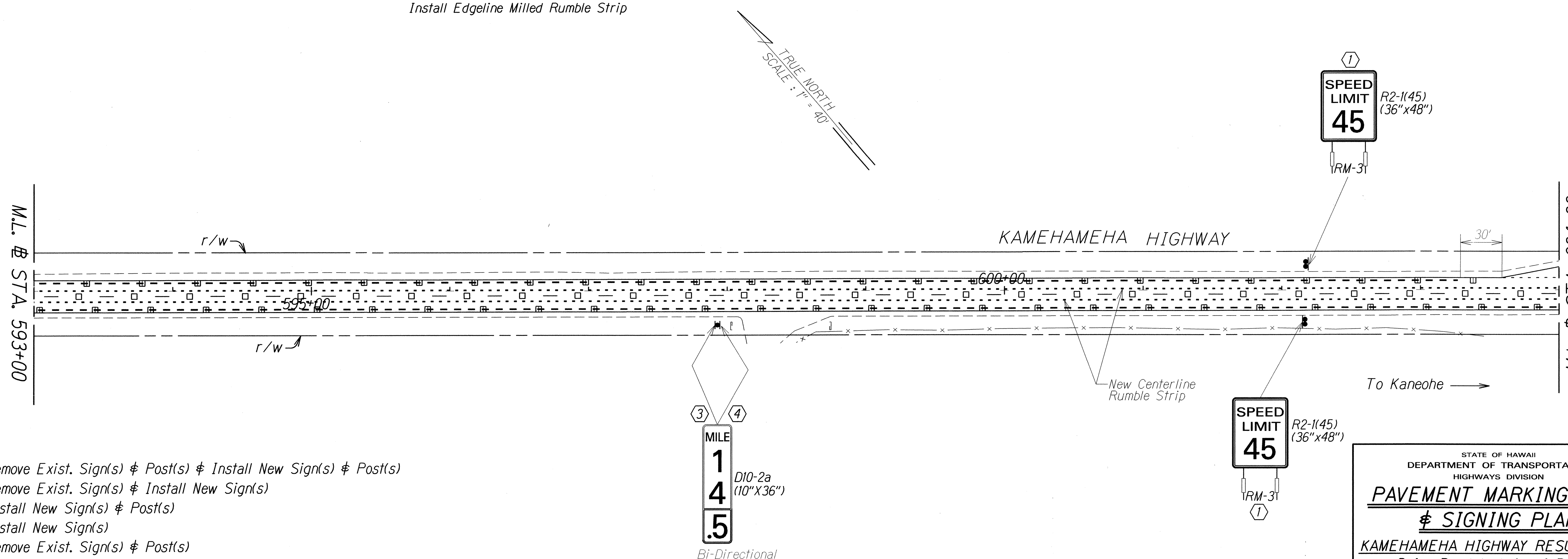

KEY:

1. Remove Exist. Sign(s) & Post(s) & Install New Sign(s) & Post(s)
2. Remove Exist. Sign(s) & Install New Sign(s)
3. Install New Sign(s) & Post(s)
4. Install New Sign(s)
5. Remove Exist. Sign(s) & Post(s)
6. Remove Exist. Sign(s)
7. Exist. Sign(s) & Post(s) to Remain
8. Relocate Exist. Sign(s) & Install New Post(s)

ORIGINAL PLAN | SURVEY PLOTTED BY | DRAWN BY | TRACED BY | DESIGNED BY | QUANTITIES BY | CHECKED BY | DATE
NOTE BOOK

STATE OF HAWAII
DEPARTMENT OF TRANSPORTATION
HIGHWAYS DIVISION

PAVEMENT MARKING PLAN & SIGNING PLAN

KAMEHAMEHA HIGHWAY RESURFACING
Dairy Road to Laiewai Bridge
Federal-Aid Project No. NH-083-1(072)

Scale: 1" = 40.0' Date: Feb., 2015

SHEET No. T16 OF 32 SHEETS

FED. ROAD DIST. NO.	STATE	FED. AID PROJ. NO.	FISCAL YEAR	SHEET NO.	TOTAL SHEETS
HAWAII	HAW.	NH-083-1(072)	2015	88	107

℄ STA. 576+90 TO ℄ STA. 625+35

Install Centerline Milled Rumble Strip;
See Detail on Plan Sheet No. T27.

℄ STA. 577+94 RT. TO ℄ STA. 605+41 RT.

Install Edgeline Milled Rumble Strip

℄ STA. 605+37 LT. TO ℄ STA. 625+35 LT.

Install Edgeline Milled Rumble Strip

℄ STA. 607+51 RT. TO ℄ STA. 625+35 RT.

Install Edgeline Milled Rumble Strip

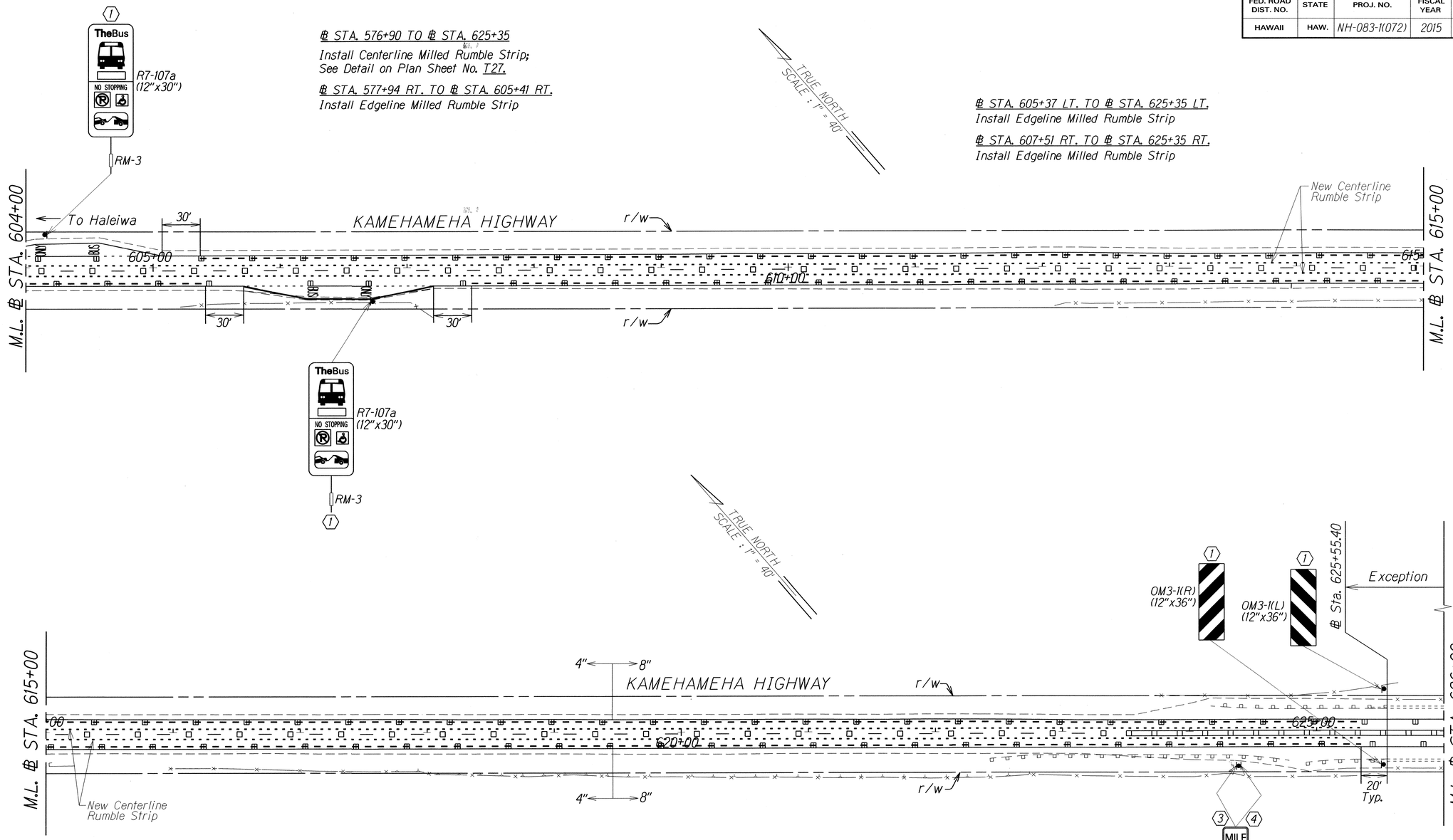

KEY:

1. Remove Exist. Sign(s) & Post(s) & Install New Sign(s) & Post(s)
2. Remove Exist. Sign(s) & Install New Sign(s)
3. Install New Sign(s) & Post(s)
4. Install New Sign(s)
5. Remove Exist. Sign(s) & Post(s)
6. Remove Exist. Sign(s)
7. Exist. Sign(s) & Post(s) to Remain
8. Relocate Exist. Sign(s) & Install New Post(s)

ORIGINAL PLAN	SURVEY PLOTTED BY	DATE
	DRAWN BY	
	TRACED BY	
	DESIGNED BY	
NOTE BOOK	QUANTITIES BY	
No.	CHECKED BY	

STATE OF HAWAII
DEPARTMENT OF TRANSPORTATION
HIGHWAYS DIVISION

PAVEMENT MARKING PLAN & SIGNING PLAN

KAMEHAMEHA HIGHWAY RESURFACING
Dairy Road to Laiewai Bridge
Federal-Aid Project No. NH-083-1(072)

Scale: 1" = 40.0' Date: Feb., 2015

SHEET No. T17 OF 32 SHEETS

FED. ROAD DIST. NO.	STATE	FED. AID PROJ. NO.	FISCAL YEAR	SHEET NO.	TOTAL SHEETS
HAWAII	HAW.	NH-083-1(072)	2015	89	107

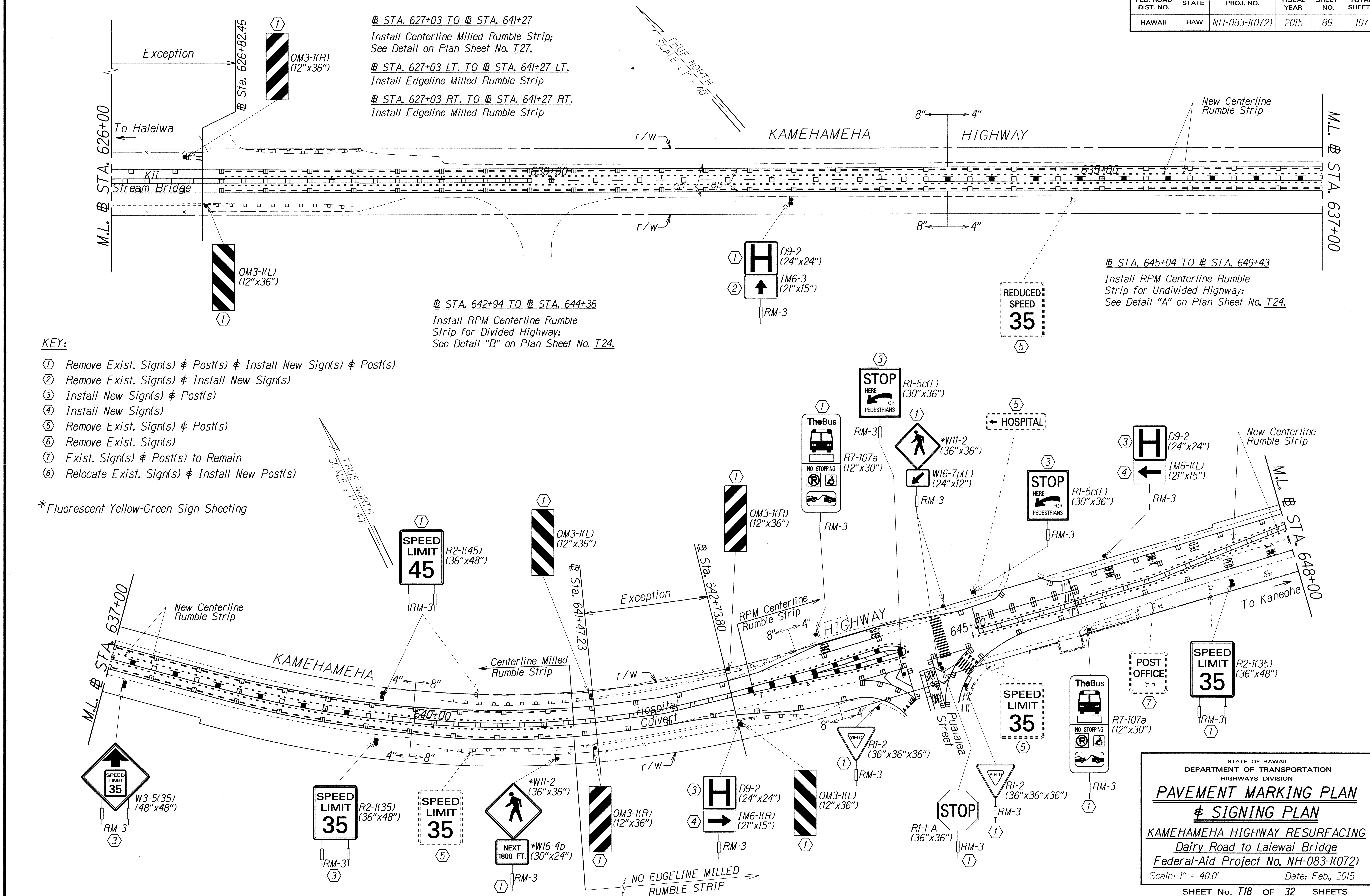

℄ STA. 627+03 TO ℄ STA. 641+27
Install Centerline Milled Rumble Strip;
See Detail on Plan Sheet No. T27.

℄ STA. 627+03 LT. TO ℄ STA. 641+27 LT.
Install Edgeline Milled Rumble Strip

℄ STA. 627+03 RT. TO ℄ STA. 641+27 RT.
Install Edgeline Milled Rumble Strip

℄ STA. 642+94 TO ℄ STA. 644+36
Install RPM Centerline Rumble
Strip for Divided Highway:
See Detail "B" on Plan Sheet No. T24.

℄ STA. 645+04 TO ℄ STA. 649+43
Install RPM Centerline Rumble
Strip for Undivided Highway:
See Detail "A" on Plan Sheet No. T24.

KEY:

1. Remove Exist. Sign(s) & Post(s) & Install New Sign(s) & Post(s)
2. Remove Exist. Sign(s) & Install New Sign(s)
3. Install New Sign(s) & Post(s)
4. Install New Sign(s)
5. Remove Exist. Sign(s) & Post(s)
6. Remove Exist. Sign(s)
7. Exist. Sign(s) & Post(s) to Remain
8. Relocate Exist. Sign(s) & Install New Post(s)

*Fluorescent Yellow-Green Sign Sheeting

ORIGINAL PLAN	SURVEY PLOTTED BY
NOTE BOOK	DRAWN BY
	TRACED BY
	DESIGNED BY
	QUANTITIES BY
	CHECKED BY

STATE OF HAWAII
DEPARTMENT OF TRANSPORTATION
HIGHWAYS DIVISION

PAVEMENT MARKING PLAN & SIGNING PLAN

KAMEHAMEHA HIGHWAY RESURFACING
Dairy Road to Laiewai Bridge
Federal-Aid Project No. NH-083-1(072)

Scale: 1" = 40.0' Date: Feb., 2015

SHEET No. T18 OF 32 SHEETS

FED. ROAD DIST. NO.	STATE	FED. AID PROJ. NO.	FISCAL YEAR	SHEET NO.	TOTAL SHEETS
HAWAII	HAW.	NH-083-1(072)	2015	ADD. 90	107

KEY:

1. Remove Exist. Sign(s) & Post(s) & Install New Sign(s) & Post(s)
2. Remove Exist. Sign(s) & Install New Sign(s)
3. Install New Sign(s) & Post(s)
4. Install New Sign(s)
5. Remove Exist. Sign(s) & Post(s)
6. Remove Exist. Sign(s)
7. Exist. Sign(s) & Post(s) to Remain
8. Relocate Exist. Sign(s) & Install New Post(s)

*Fluorescent Yellow-Green Sign Sheeting

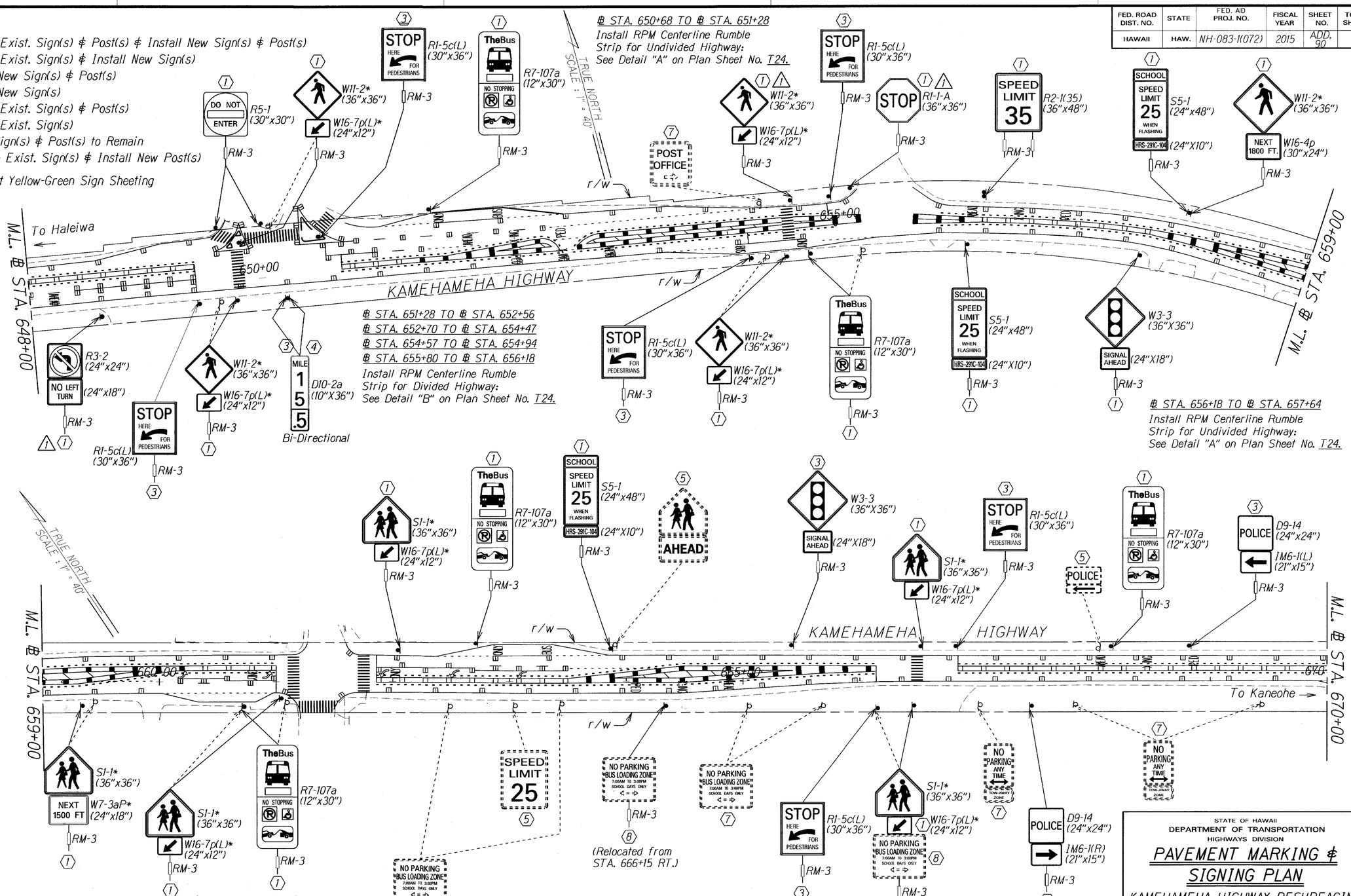

℄ STA. 650+68 TO ℄ STA. 651+28
Install RPM Centerline Rumble Strip for Undivided Highway:
See Detail "A" on Plan Sheet No. T24.

℄ STA. 651+28 TO ℄ STA. 652+56
℄ STA. 652+70 TO ℄ STA. 654+47
℄ STA. 654+57 TO ℄ STA. 654+94
℄ STA. 655+80 TO ℄ STA. 656+18
Install RPM Centerline Rumble Strip for Divided Highway:
See Detail "B" on Plan Sheet No. T24.

℄ STA. 656+18 TO ℄ STA. 657+64
Install RPM Centerline Rumble Strip for Undivided Highway:
See Detail "A" on Plan Sheet No. T24.

℄ STA. 657+64 TO ℄ STA. 660+20
Install RPM Centerline Rumble Strip for Divided Highway:
See Detail "B" on Plan Sheet No. T24.

℄ STA. 660+20 TO ℄ STA. 661+00
℄ STA. 661+86 TO ℄ STA. 663+51
Install RPM Centerline Rumble Strip for Undivided Highway:
See Detail "A" on Plan Sheet No. T24.

℄ STA. 663+51 TO ℄ STA. 666+14
Install RPM Centerline Rumble Strip for Divided Highway:
See Detail "B" on Plan Sheet No. T24.

℄ STA. 666+84 TO ℄ STA. 671+19
Install RPM Centerline Rumble Strip for Undivided Highway:
See Detail "A" on Plan Sheet No. T24.

DATE	REVISION
1 6/04/15	Sign Legend ref.

STATE OF HAWAII
DEPARTMENT OF TRANSPORTATION
HIGHWAYS DIVISION

PAVEMENT MARKING & SIGNING PLAN

KAMEHAMEHA HIGHWAY RESURFACING
Dairy Road to Laiewai Bridge
Federal-Aid Project No. NH-083-1(072)

Scale: 1" = 40' Date: Feb., 2015

SHEET No. T19 OF 32 SHEETS

ADD. 90

ORIGINAL PLAN | SURVEY PLOTTED BY | DRAWN BY | TRACED BY | DESIGNED BY | QUANTITIES BY | CHECKED BY | DATE | NOTE BOOK No.

FED. ROAD DIST. NO.	STATE	FED. AID PROJ. NO.	FISCAL YEAR	SHEET NO.	TOTAL SHEETS
HAWAII	HAW.	NH-083-1(072)	2015	ADD. 91	107

℄ STA. 671+88 TO ℄ STA. 672+88
Install RPM Centerline Rumble Strip for Undivided Highway:
See Detail "A" on Plan Sheet No. T24.

℄ STA. 672+88 TO ℄ STA. 678+28
Install Centerline Milled Rumble Strip
See Detail on Plan Sheet No. T27.

℄ STA. 678+28 TO ℄ STA. 679+29
Install RPM Centerline Rumble Strip for Undivided Highway:
See Detail "A" on Plan Sheet No. T24.

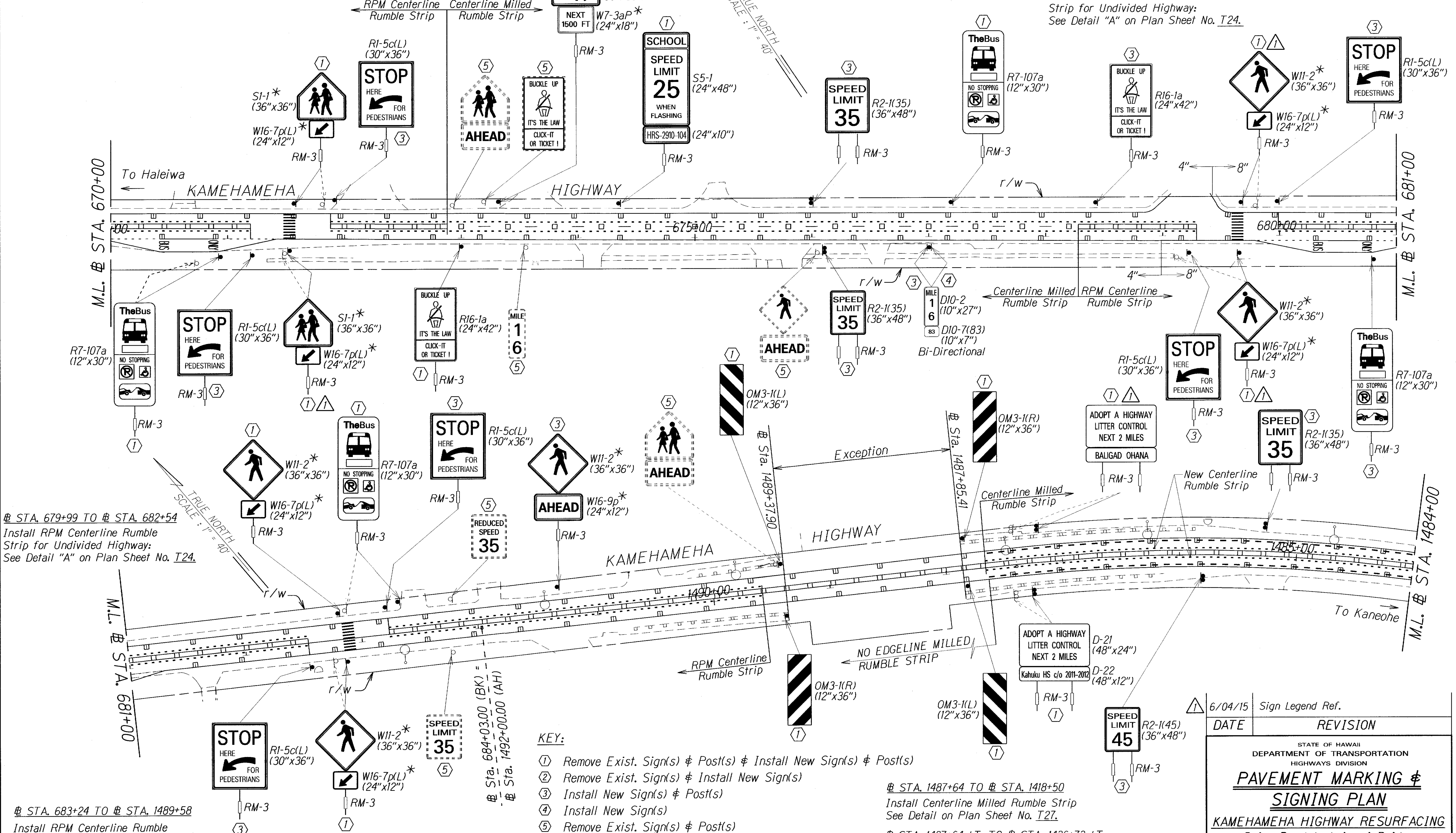

℄ STA. 679+99 TO ℄ STA. 682+54
Install RPM Centerline Rumble Strip for Undivided Highway:
See Detail "A" on Plan Sheet No. T24.

℄ STA. 683+24 TO ℄ STA. 1489+58
Install RPM Centerline Rumble Strip for Undivided Highway:
See Detail "A" on Plan Sheet No. T24.

*Fluorescent Yellow-Green Sign Sheeting

KEY:

1. Remove Exist. Sign(s) & Post(s) & Install New Sign(s) & Post(s)
2. Remove Exist. Sign(s) & Install New Sign(s)
3. Install New Sign(s) & Post(s)
4. Install New Sign(s)
5. Remove Exist. Sign(s) & Post(s)
6. Remove Exist. Sign(s)
7. Exist. Sign(s) & Post(s) to Remain
8. Relocate Exist. Sign(s) & Install New Post(s)

℄ STA. 1487+64 TO ℄ STA. 1418+50
Install Centerline Milled Rumble Strip
See Detail on Plan Sheet No. T27.

℄ STA. 1487+64 LT. TO ℄ STA. 1436+73 LT.
Install Edgeline Milled Rumble Strip

℄ STA. 1487+64 RT. TO ℄ STA. 1444+57 RT.
Install Edgeline Milled Rumble Strip

DATE	REVISION
△ 6/04/15	Sign Legend Ref.

STATE OF HAWAII
DEPARTMENT OF TRANSPORTATION
HIGHWAYS DIVISION

PAVEMENT MARKING & SIGNING PLAN

KAMEHAMEHA HIGHWAY RESURFACING
Dairy Road to Laiewai Bridge
Federal-Aid Project No. NH-083-1(072)

Scale: 1" = 40' Date: Feb., 2015

SHEET No. T20 OF 32 SHEETS

ADD. 91

ORIGINAL PLAN / NOTE BOOK No. / SURVEY PLOTTED BY / DRAWN BY / TRACED BY / DESIGNED BY / QUANTITIES BY / CHECKED BY / DATE

FED. ROAD DIST. NO.	STATE	FED. AID PROJ. NO.	FISCAL YEAR	SHEET NO.	TOTAL SHEETS
HAWAII	HAW.	NH-083-1(072)	2015	92	107

℄ STA. 1487+64 TO ℄ STA. 1418+50
Install Centerline Milled Rumble Strip
See Detail on Plan Sheet No. T27.

℄ STA. 1487+64 LT. TO ℄ STA. 1436+73 LT.
Install Edgeline Milled Rumble Strip

℄ STA. 1487+64 RT. TO ℄ STA. 1444+57 RT.
Install Edgeline Milled Rumble Strip

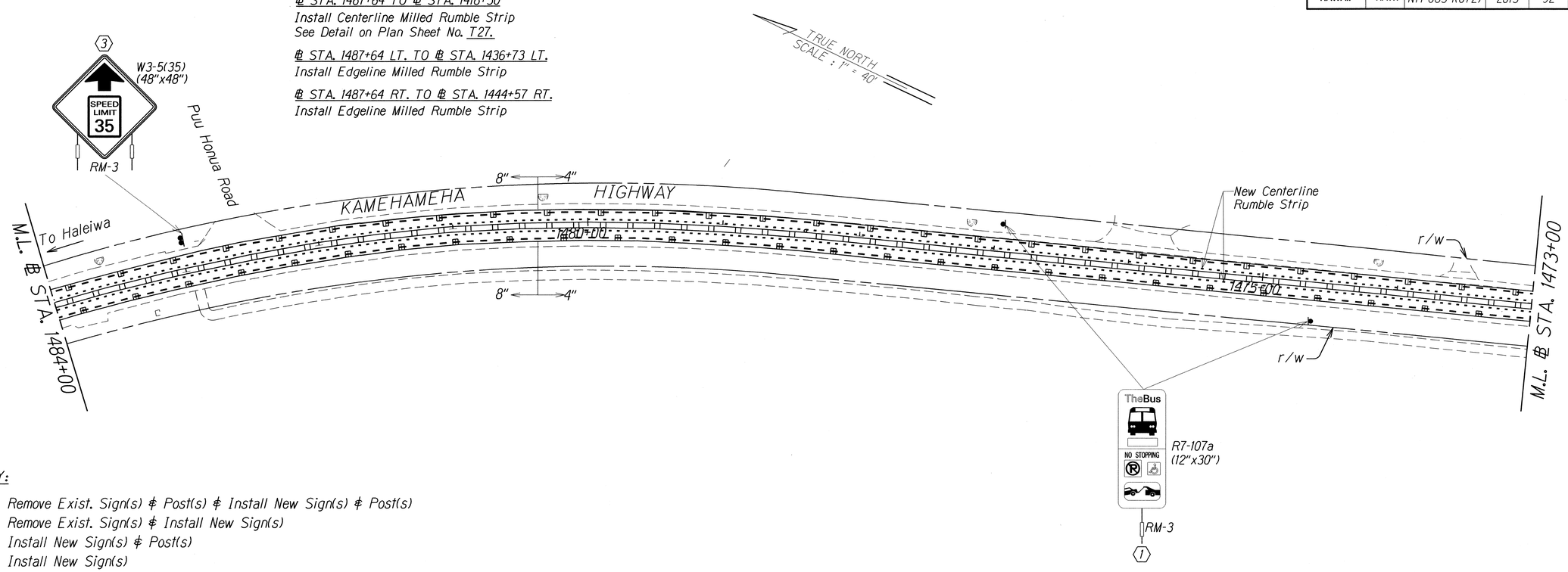

KEY:

1. Remove Exist. Sign(s) & Post(s) & Install New Sign(s) & Post(s)
2. Remove Exist. Sign(s) & Install New Sign(s)
3. Install New Sign(s) & Post(s)
4. Install New Sign(s)
5. Remove Exist. Sign(s) & Post(s)
6. Remove Exist. Sign(s)
7. Exist. Sign(s) & Post(s) to Remain
8. Relocate Exist. Sign(s) & Install New Post(s)

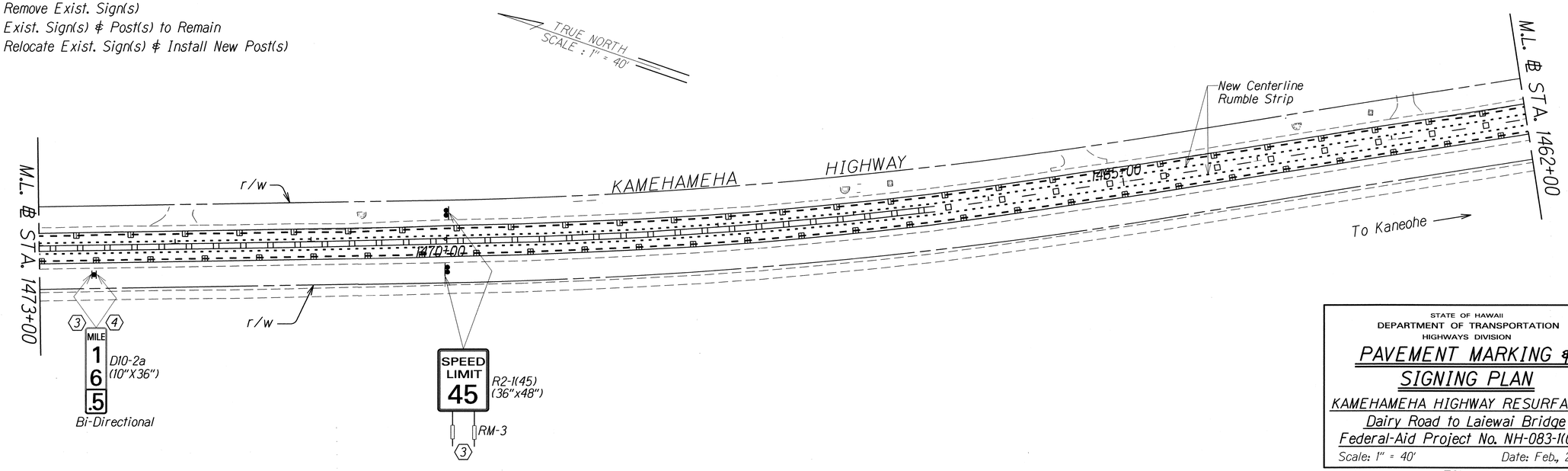

ORIGINAL PLAN	SURVEY PLOTTED BY	DATE
	DRAWN BY	
	TRACED BY	
NOTE BOOK	DESIGNED BY	
	QUANTITIES BY	
N.	CHECKED BY	

STATE OF HAWAII
DEPARTMENT OF TRANSPORTATION
HIGHWAYS DIVISION

PAVEMENT MARKING & SIGNING PLAN

KAMEHAMEHA HIGHWAY RESURFACING
Dairy Road to Laiewai Bridge
Federal-Aid Project No. NH-083-1(072)

Scale: 1" = 40' Date: Feb., 2015

SHEET No. T21 OF 32 SHEETS

FED. ROAD DIST. NO.	STATE	FED. AID PROJ. NO.	FISCAL YEAR	SHEET NO.	TOTAL SHEETS
HAWAII	HAW.	NH-083-1(072)	2015	93	107

℄ STA. 1487+64 TO ℄ STA. 1418+50
Install Centerline Milled Rumble Strip
See Detail on Plan Sheet No. T27.

℄ STA. 1487+64 LT. TO ℄ STA. 1436+73 LT.
Install Edgeline Milled Rumble Strip

℄ STA. 1487+64 RT. TO ℄ STA. 1444+57 RT.
Install Edgeline Milled Rumble Strip

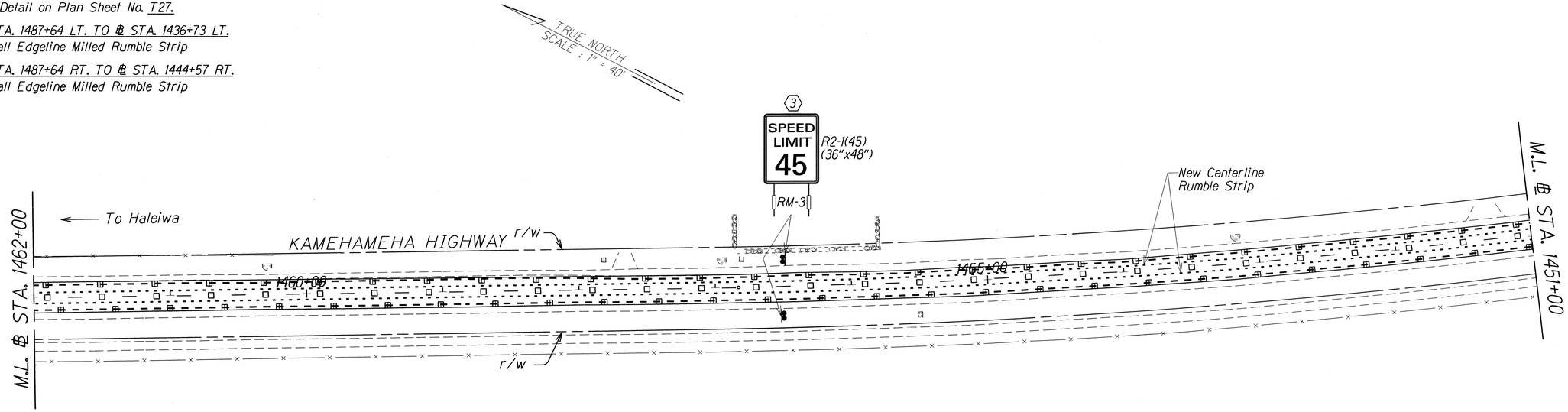

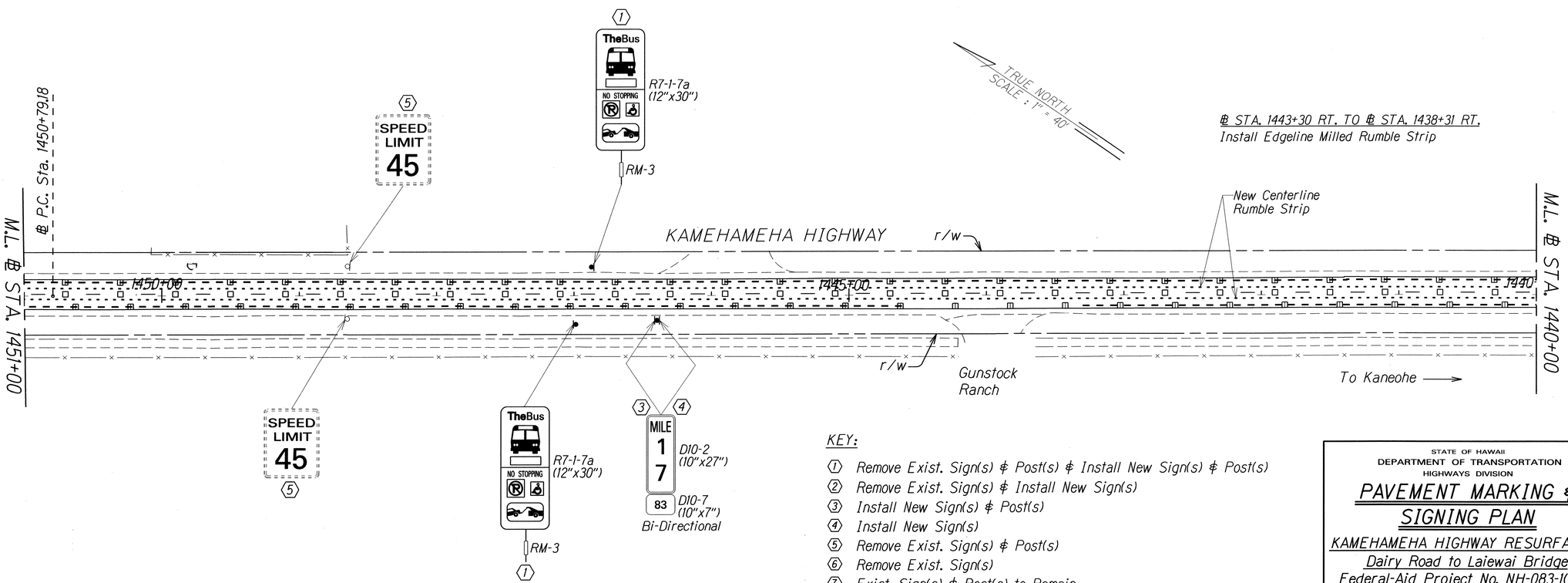

℄ STA. 1443+30 RT. TO ℄ STA. 1438+31 RT.
Install Edgeline Milled Rumble Strip

KEY:

1. Remove Exist. Sign(s) & Post(s) & Install New Sign(s) & Post(s)
2. Remove Exist. Sign(s) & Install New Sign(s)
3. Install New Sign(s) & Post(s)
4. Install New Sign(s)
5. Remove Exist. Sign(s) & Post(s)
6. Remove Exist. Sign(s)
7. Exist. Sign(s) & Post(s) to Remain
8. Relocate Exist. Sign(s) & Install New Post(s)

STATE OF HAWAII
DEPARTMENT OF TRANSPORTATION
HIGHWAYS DIVISION

PAVEMENT MARKING & SIGNING PLAN

KAMEHAMEHA HIGHWAY RESURFACING
Dairy Road to Laiewai Bridge
Federal-Aid Project No. NH-083-1(072)

Scale: 1" = 40' Date: Feb., 2015

SHEET No. T22 OF 32 SHEETS

ORIGINAL PLAN	SURVEY PLOTTED BY	DATE
	DRAWN BY	
	TRACED BY	
NOTE BOOK	DESIGNED BY	
No.	QUANTITIES BY	
	CHECKED BY	

FED. ROAD DIST. NO.	STATE	FED. AID PROJ. NO.	FISCAL YEAR	SHEET NO.	TOTAL SHEETS
HAWAII	HAW.	NH-083-1(072)	2015	ADD. 94	107

℄ STA. 1487+64 TO ℄ STA. 1418+50

Install Centerline Milled Rumble Strip
See Detail on Plan Sheet No. T27.

℄ STA. 1487+64 LT. TO ℄ STA. 1436+73 LT.
Install Edgeline Milled Rumble Strip

℄ STA. 1443+30 RT. TO ℄ STA. 1438+31 RT.
Install Edgeline Milled Rumble Strip

℄ STA. 1435+48 LT. TO ℄ STA. 1412+00 LT.
Install Edgeline Milled Rumble Strip

℄ STA. 1436+20 RT. TO ℄ STA. 1419+00 RT.
Install Edgeline Milled Rumble Strip

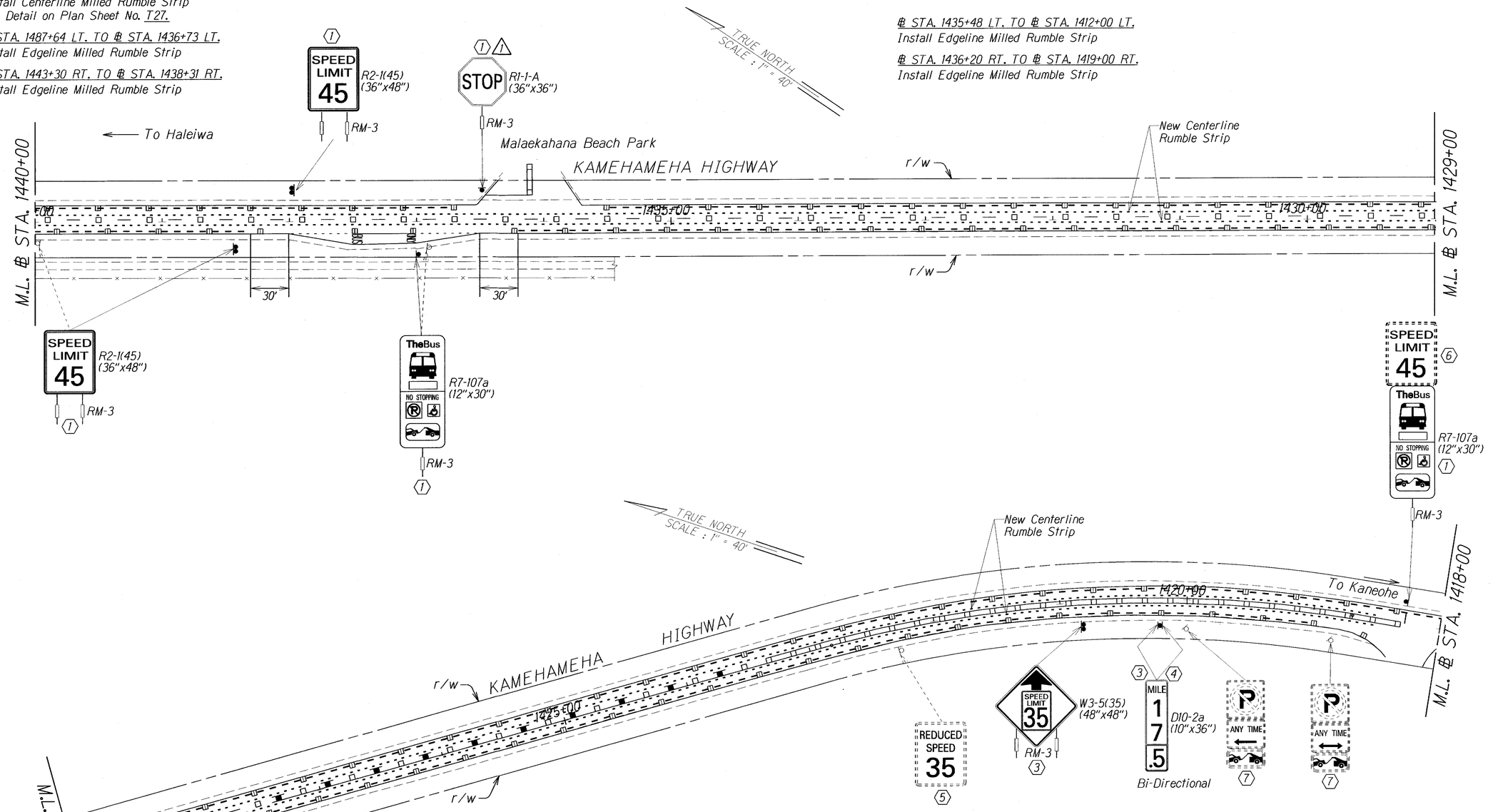

KEY:

1. Remove Exist. Sign(s) & Post(s) & Install New Sign(s) & Post(s)
2. Remove Exist. Sign(s) & Install New Sign(s)
3. Install New Sign(s) & Post(s)
4. Install New Sign(s)
5. Remove Exist. Sign(s) & Post(s)
6. Remove Exist. Sign(s)
7. Exist. Sign(s) & Post(s) to Remain
8. Relocate Exist. Sign(s) & Install New Post(s)

DATE	REVISION
1 6/04/15	Sign Legend Ref.

STATE OF HAWAII
DEPARTMENT OF TRANSPORTATION
HIGHWAYS DIVISION

PAVEMENT MARKING & SIGNING PLAN

KAMEHAMEHA HIGHWAY RESURFACING
Dairy Road to Laiewai Bridge
Federal-Aid Project No. NH-083-1(072)

Scale: 1" = 40' Date: Feb., 2015

SHEET No. T23 OF 32 SHEETS

ADD. 94

ORIGINAL PLAN	SURVEY PLOTTED BY	DATE
	DRAWN BY	
	TRACED BY	
NOTE BOOK	DESIGNED BY	
	QUANTITIES BY	
No.	CHECKED BY	

FED. ROAD DIST. NO.	STATE	FED. AID PROJ. NO.	FISCAL YEAR	SHEET NO.	TOTAL SHEETS
HAWAII	HAW.	NH-083-1(072)	2015	95	107

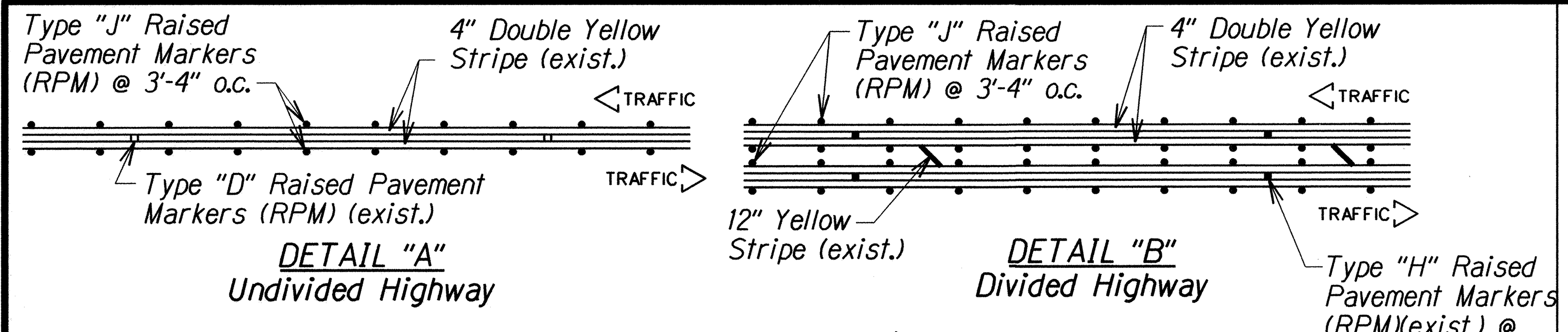

RPM CENTERLINE RUMBLE STRIP ⊈ MARKING DETAIL

Not to Scale

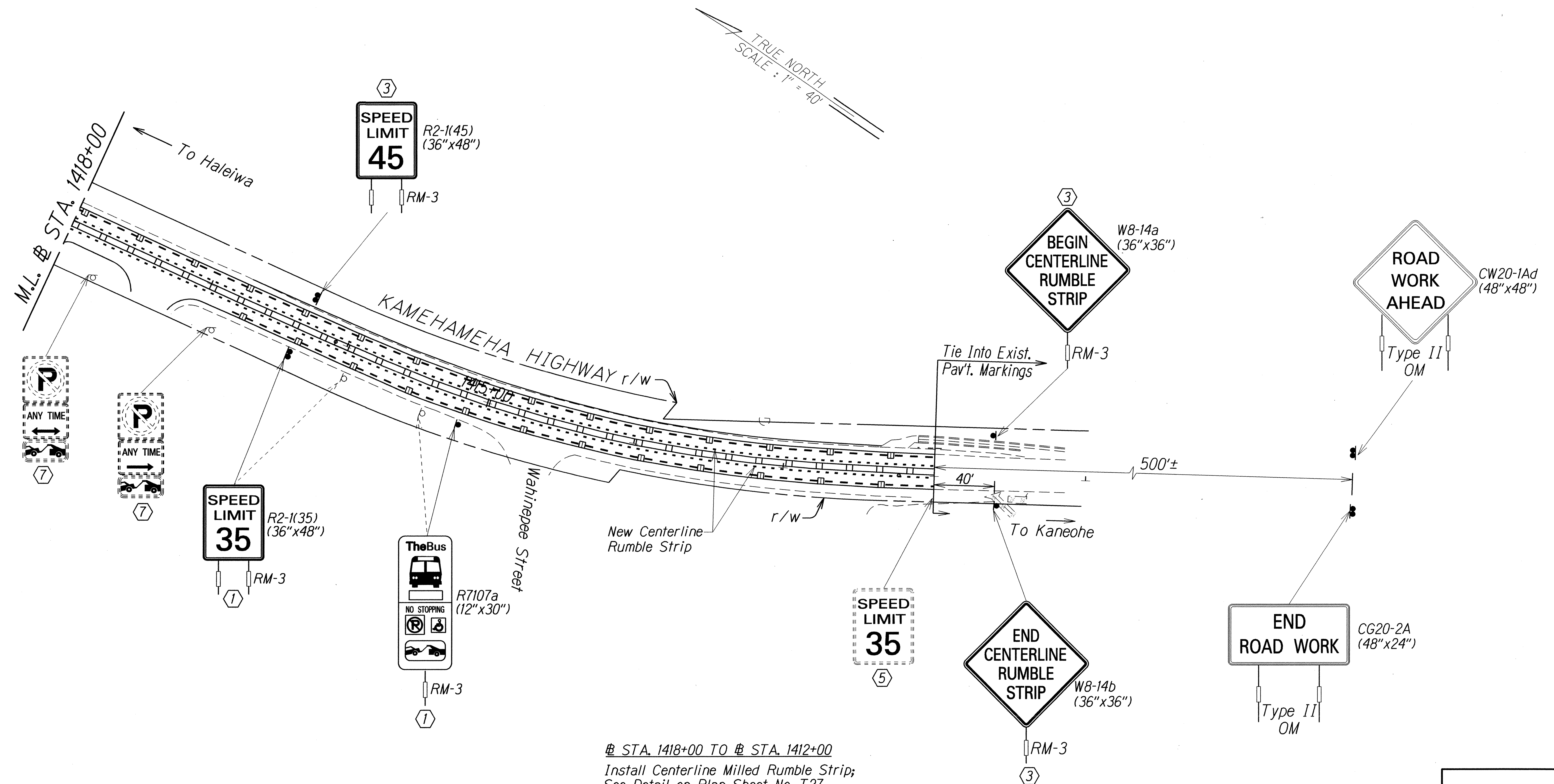

KEY:

1. Remove Exist. Sign(s) & Post(s) & Install New Sign(s) & Post(s)
2. Remove Exist. Sign(s) & Install New Sign(s)
3. Install New Sign(s) & Post(s)
4. Install New Sign(s)
5. Remove Exist. Sign(s) & Post(s)
6. Remove Exist. Sign(s)
7. Exist. Sign(s) & Post(s) to Remain
8. Relocate Exist. Sign(s) & Install New Post(s)

℄ STA. 1418+00 TO ℄ STA. 1412+00
Install Centerline Milled Rumble Strip;
See Detail on Plan Sheet No. T27.

℄ STA. 1435+48 LT. TO ℄ STA. 1412+00 LT.
Install Edgeline Milled Rumble Strip

℄ STA. 1416+80 RT. TO ℄ STA. 1412+00 RT.
Install Edgeline Milled Rumble Strip

STATE OF HAWAII
DEPARTMENT OF TRANSPORTATION
HIGHWAYS DIVISION

PAVEMENT MARKING & SIGNING PLAN

KAMEHAMEHA HIGHWAY RESURFACING
Dairy Road to Laiewai Bridge
Federal-Aid Project No. NH-083-1(072)

Scale: 1" = 40' Date: Feb., 2015

SHEET No. T24 OF 32 SHEETS

ORIGINAL PLAN | SURVEY PLOTTED BY | DRAWN BY | TRACED BY | DESIGNED BY | QUANTITIES BY | CHECKED BY | DATE
NOTE BOOK

FED. ROAD DIST. NO.	STATE	PROJ. NO.	FISCAL YEAR	SHEET NO.	TOTAL SHEETS
HAWAII	HAW.	NH-083-1(072)	2015	96	107

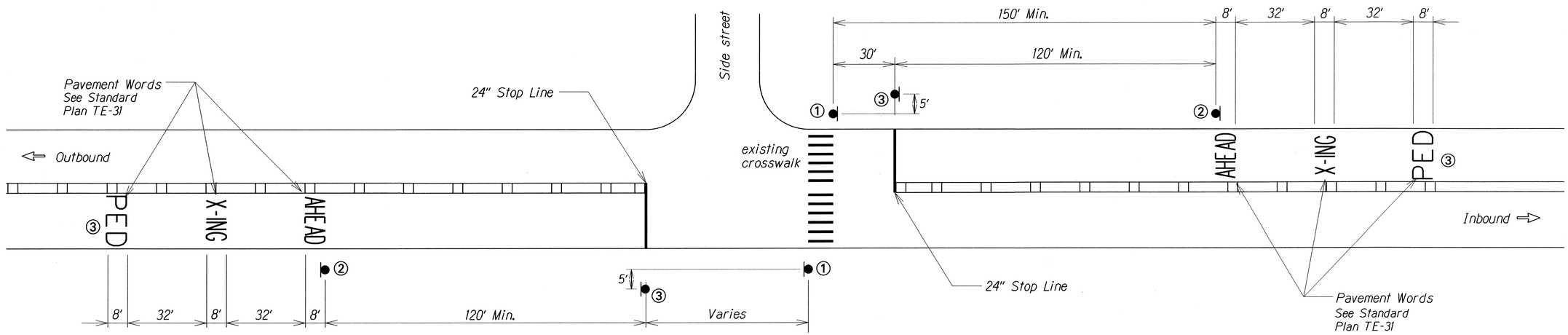

TYPICAL UNSIGNALIZED INTERSECTION MARKINGS

(NO LEFT TURN STORAGE LANES)

Not to Scale

①

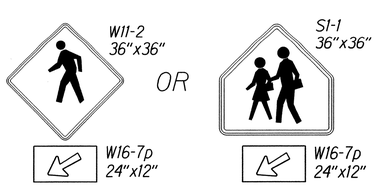

Black legend on flourescent yellow green background

②

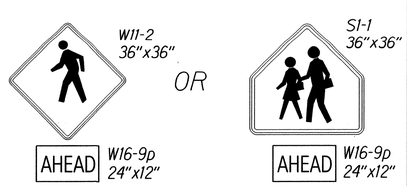

Black legend on flourescent yellow green background

③

Revised R1-5c(L)
30"x36"

Black legend on white background
See attached sheet for detail

NOTE:

Offset 5' horizontally with crossing sign. Do not install if insufficient space to offset signs.

ORIGINAL PLAN	SURVEY PLOTTED BY	DATE
	DRAWN BY	
	TRACED BY	
NOTE BOOK	DESIGNED BY	
	QUANTITIES BY	
	CHECKED BY	

STATE OF HAWAII
DEPARTMENT OF TRANSPORTATION
HIGHWAYS DIVISION

SCHOOL/PEDESTRIAN PAVEMENT MARKING AND SIGNING

KAMEHAMEHA HIGHWAY RESURFACING
Dairy Road to Laiewai Bridge
Federal-Aid Project No. NH-083-1(072)

Scale: NTS Date: Feb., 2015

SHEET No. T25 OF 32 SHEETS

FED. ROAD DIST. NO.	STATE	FED. AID PROJ. NO.	FISCAL YEAR	SHEET NO.	TOTAL SHEETS
HAWAII	HAW.	NH-083-1(072)	2015	97	107

2¼" Radius, ⅞" Border, ⅝" Indent

W26-1
Colors: Black on Yellow

R1-5c(L)
Colors: Black on White

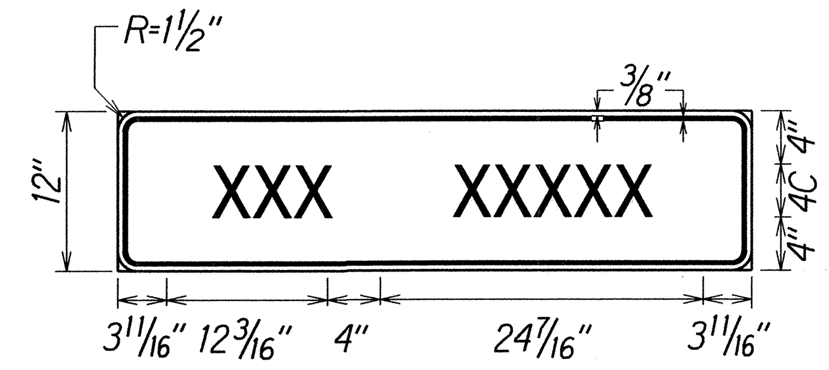

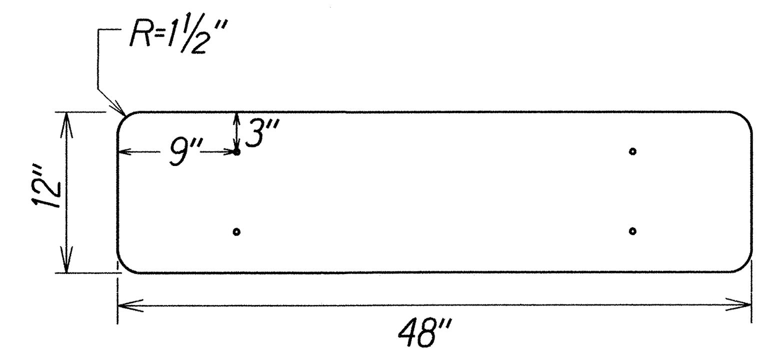

D-22
Not to Scale
Colors: Blue on White

24"

1.500" Radius, 0.625" Border, 0.375" Indent, Black on White;

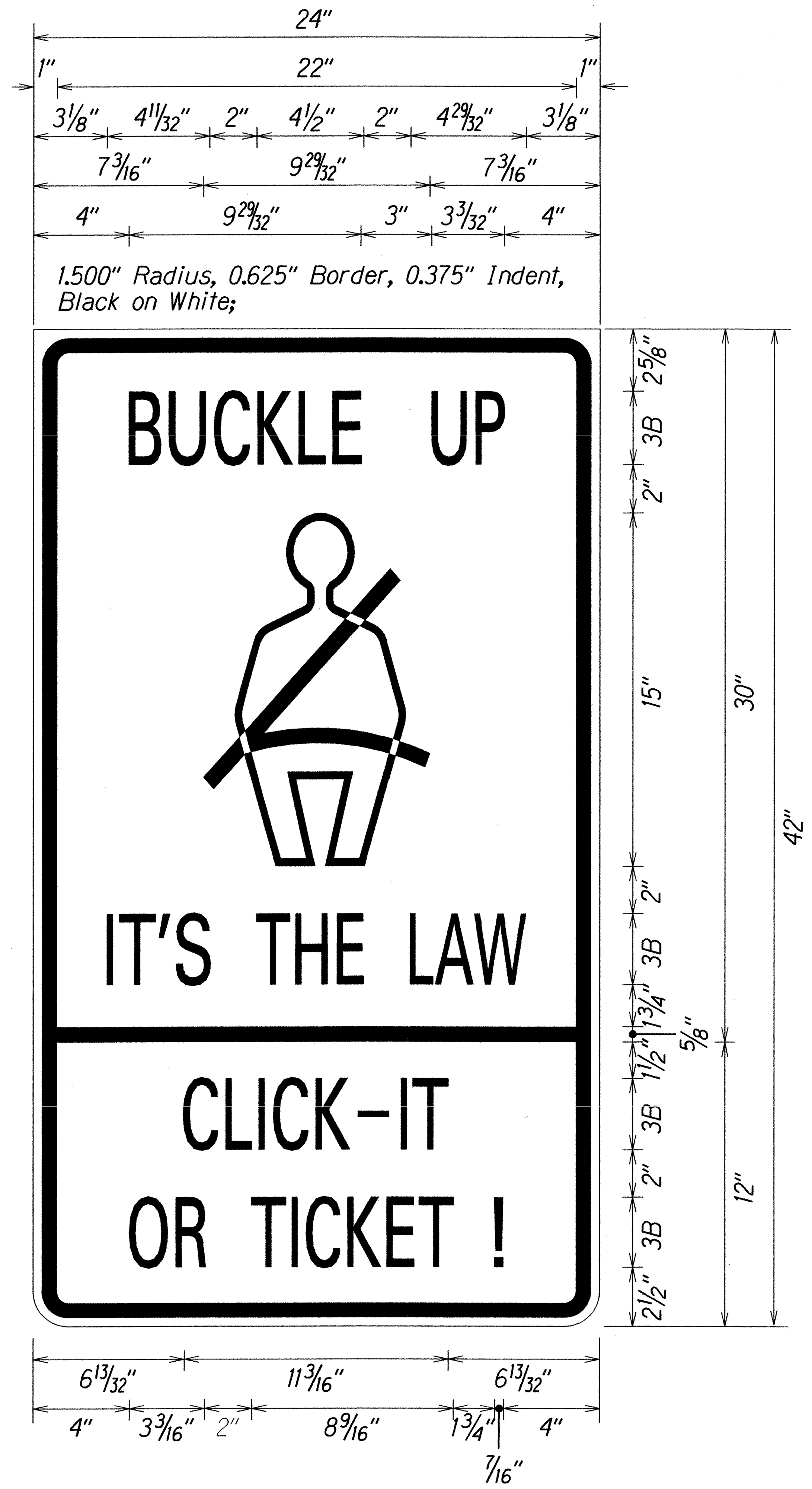

1.500" Radius, 0.625" Border, 0.375" Indent, Black on Yellow;

R16-1a
Colors: Black on White (Top)
Black on Yellow (Bottom)

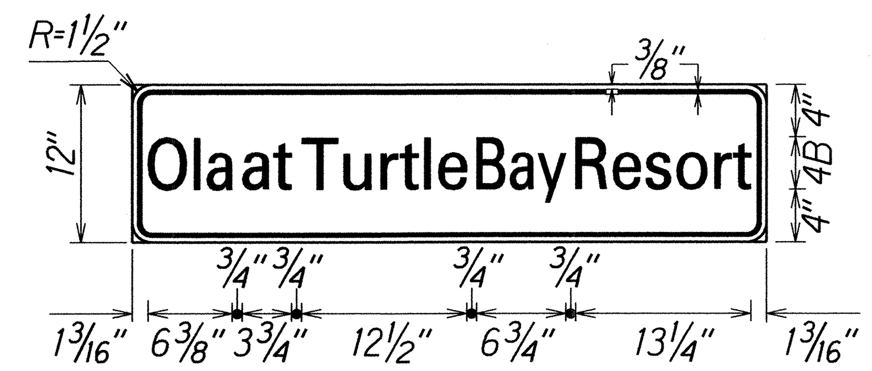

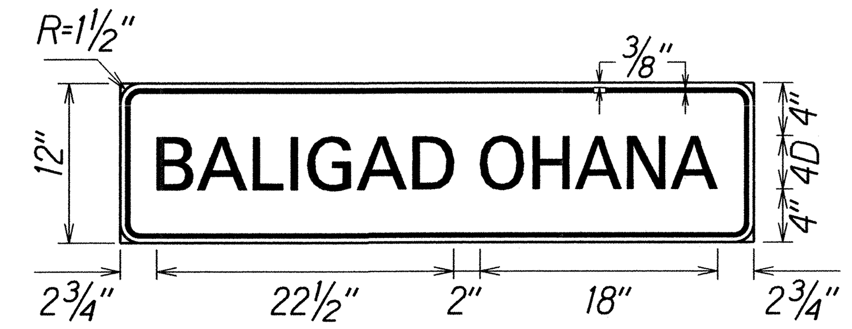

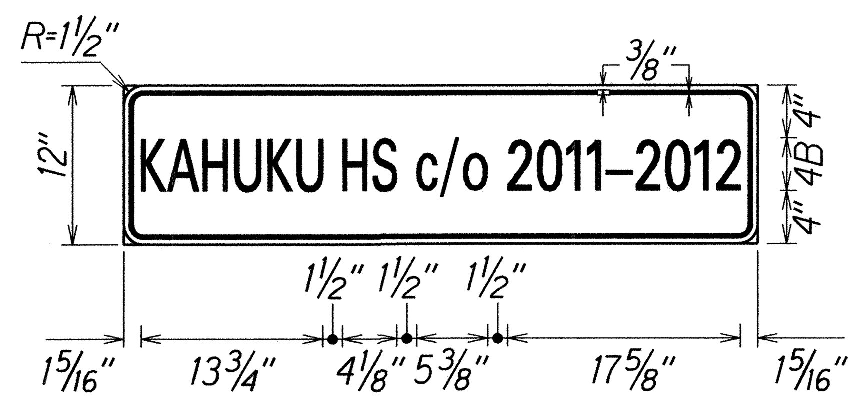

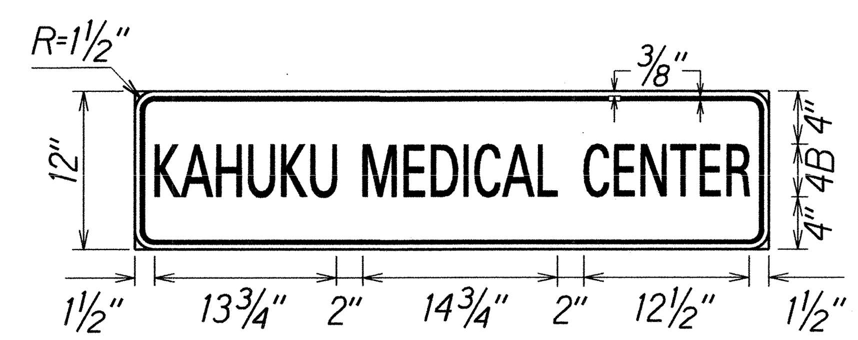

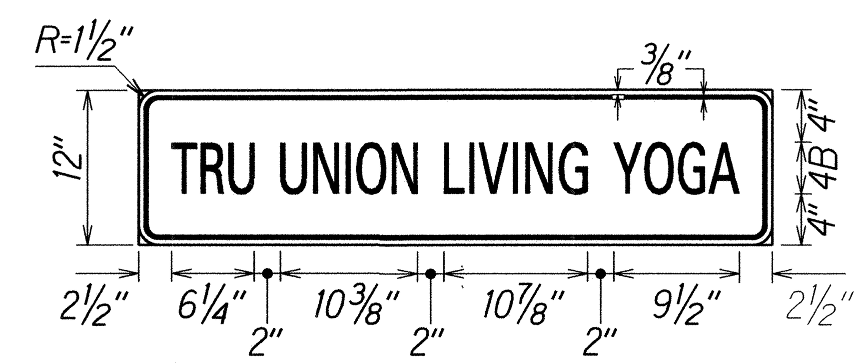

2¼" Radius, ⅞" Border, ⅝" Indent

W26-2
Colors: Black on Yellow

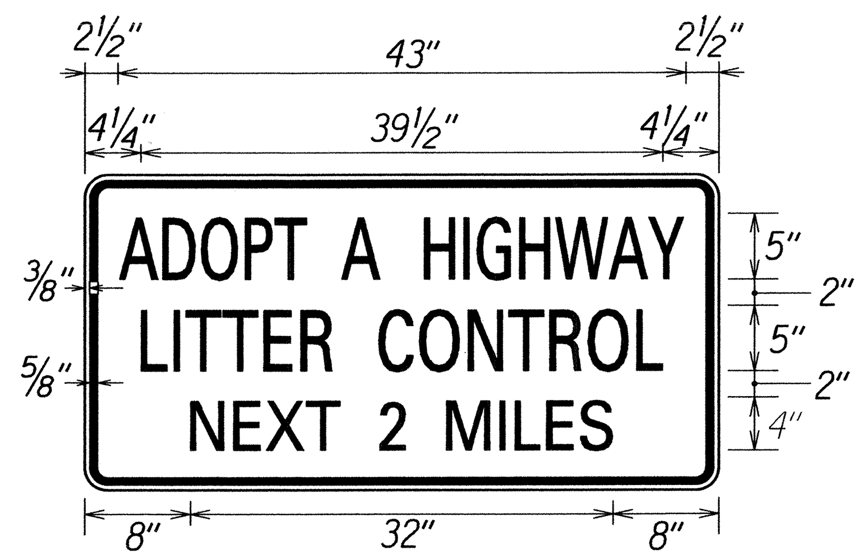

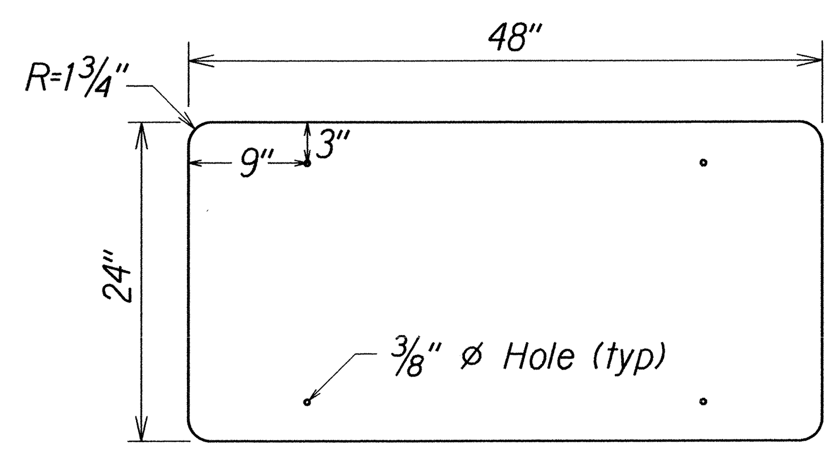

D-21
Not to Scale
Colors: Blue on White

ORIGINAL PLAN
NOTE BOOK
SURVEY PLOTTED BY
DRAWN BY
TRACED BY
DESIGNED BY
QUANTITIES BY
CHECKED BY
DATE

STATE OF HAWAII
DEPARTMENT OF TRANSPORTATION
HIGHWAYS DIVISION

MISCELLANEOUS SIGN DETAILS

KAMEHAMEHA HIGHWAY RESURFACING
Dairy Road to Laiewai Bridge
Federal Aid Project No. NH-083-1(072)

Scale: As Noted
Date: Feb., 2015

SHEET No. T26 OF 32 SHEETS

FED. ROAD DIST. NO.	STATE	FED. AID PROJ. NO.	FISCAL YEAR	SHEET NO.	TOTAL SHEETS
HAWAII	HAW.	NH-083-1(072)	2015	98	107

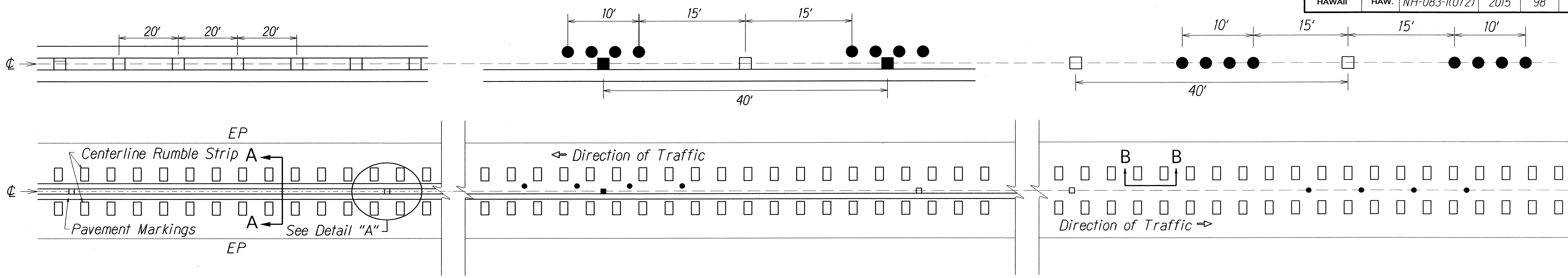

PLAN - CENTERLINE MILLED RUMBLE STRIP
Not to Scale

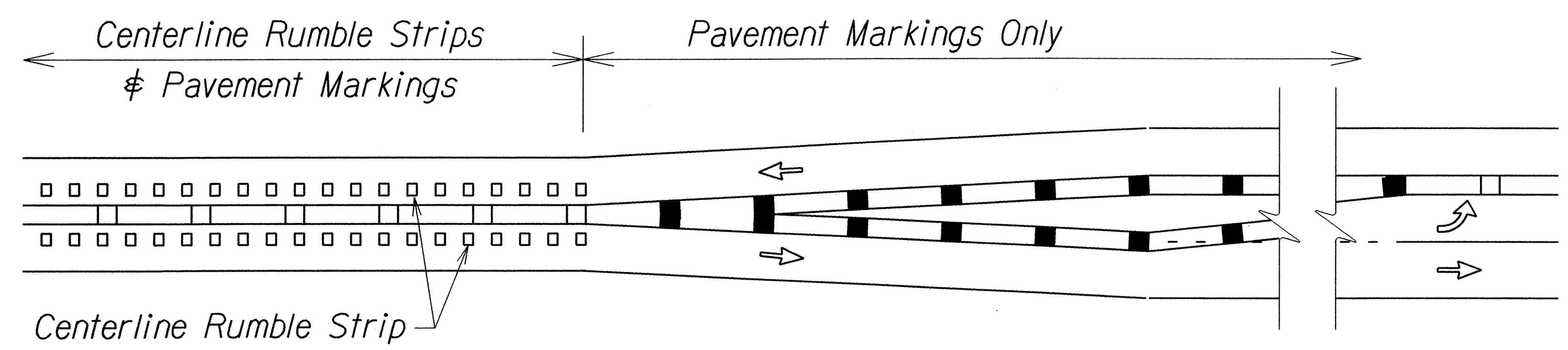

CENTERLINE MILLED RUMBLE STRIP INSTALLATION LIMIT
Not to Scale

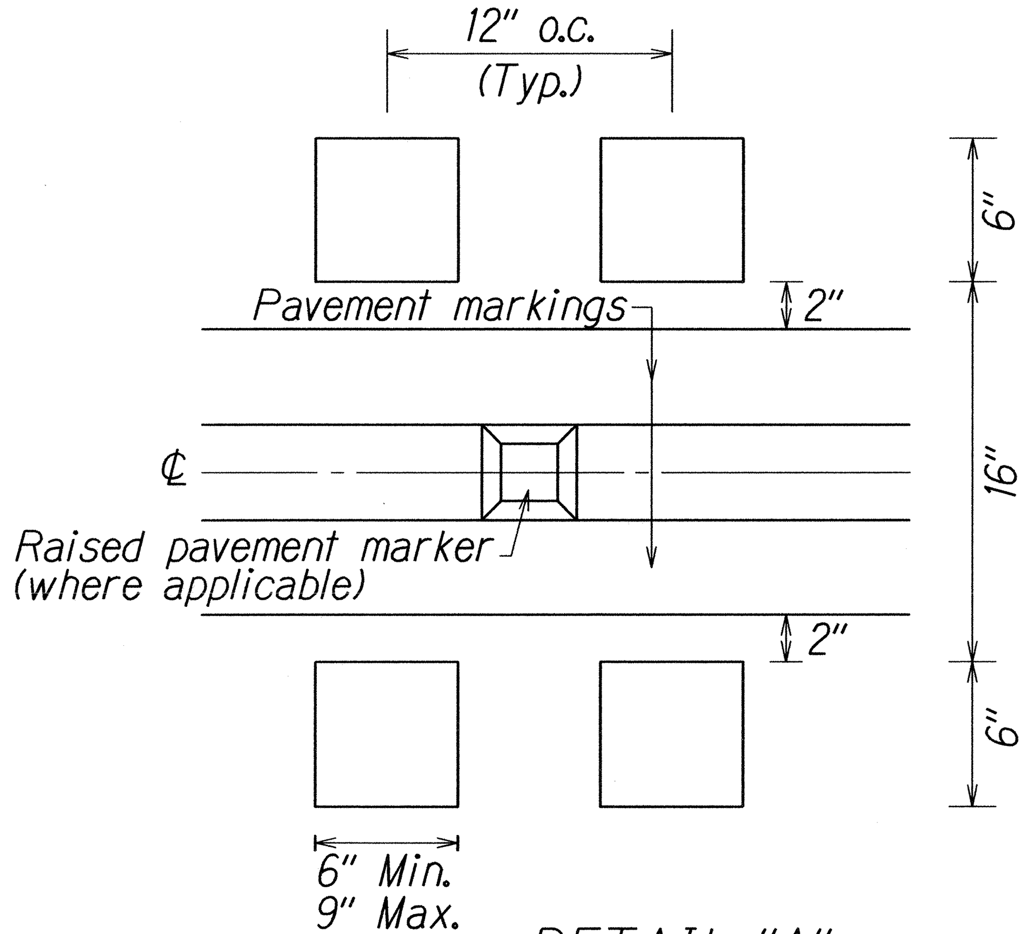

DETAIL "A"
Not to Scale

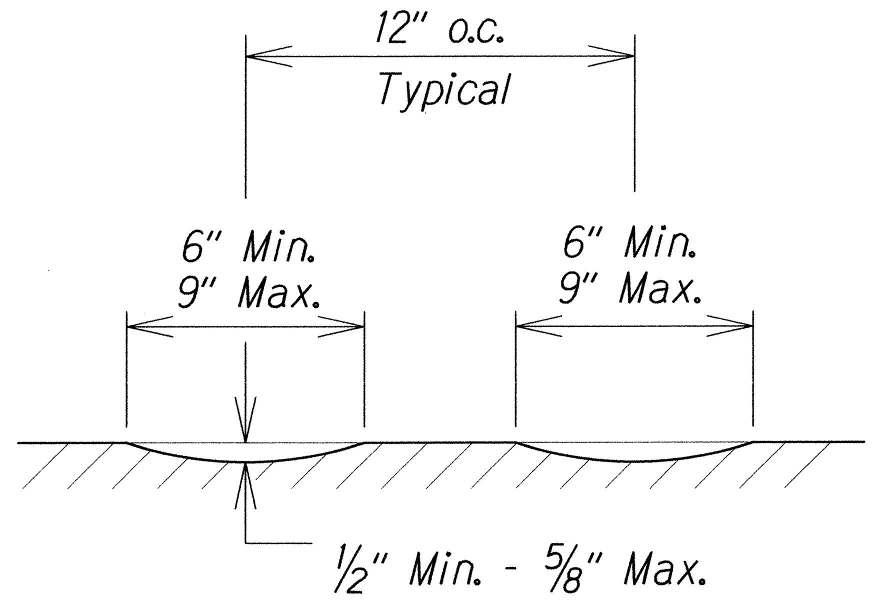

SECTION B-B - CENTERLINE MILLED RUMBLE STRIP
Not to Scale

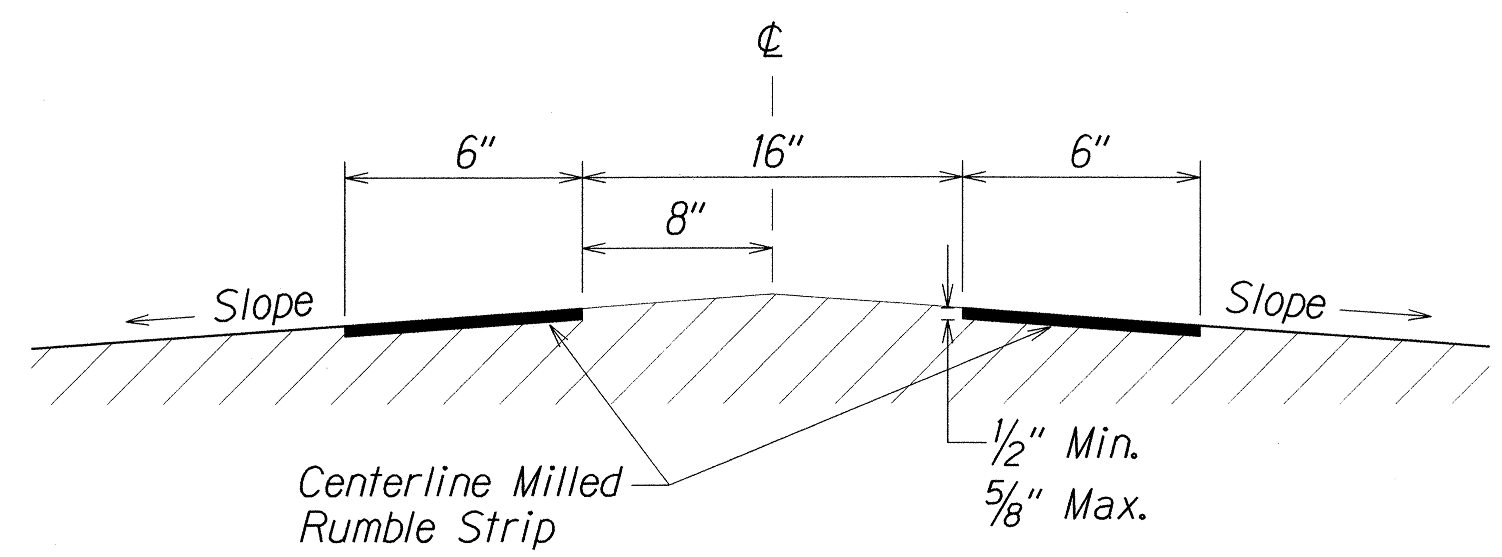

SECTION A-A - CENTERLINE MILLED RUMBLE STRIP
Not to Scale

NOTES:

1. The method of constructing the centerline milled rumble strip shall be submitted to the Engineer for acceptance prior to the actual work.
2. Dimensions shown are approximate. Adjust rumble strip spacing to coordinate with pavement markings prior to installation.
3. Raised pavement markers shall be installed on level surface between the rumble strips. Do not install raised pavement markers inside the milled area.
4. The construction of the centerline milled rumble strip shall be paid for under Item No. 615.0110 - Double 10-inch Milled Rumble Strip, Centerline.
5. The milling apparatus and removal of existing pavement markings will not be paid for separately and shall be considered incidental to Item 615.0110 - Double 6-Inch Milled Rumble Strip, Centerline.
6. Do not install centerline rumble strips on bridge decks.
7. Where at-grade bridges are present, rumble strips shall end/begin 20 L.F. beyond the existing bridge deck joints/concrete approach slab.

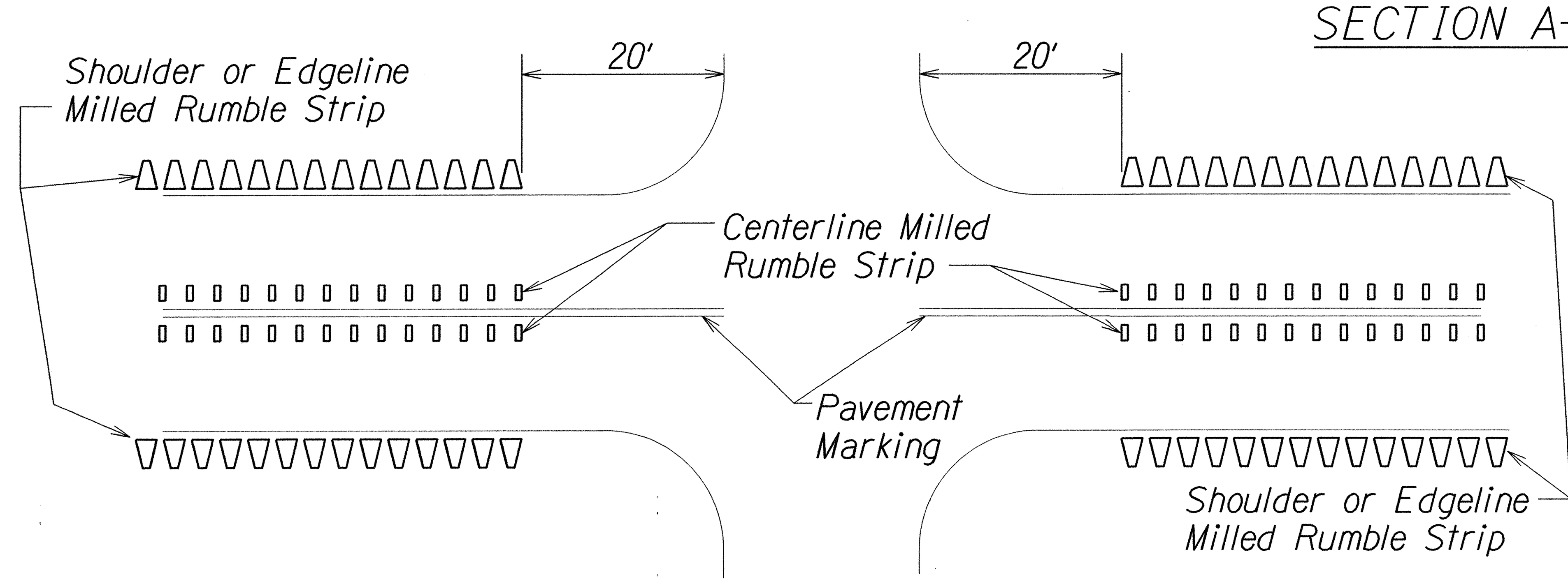

MILLED RUMBLE STRIP INSTALLATION LIMITS
Not to Scale

ORIGINAL PLAN | SURVEY PLOTTED BY | DRAWN BY | TRACED BY | DESIGNED BY | QUANTITIES BY | CHECKED BY | NOTE BOOK | DATE

STATE OF HAWAII
DEPARTMENT OF TRANSPORTATION
HIGHWAYS DIVISION

CENTERLINE MILLED RUMBLE STRIP DETAIL

KAMEHAMEHA HIGHWAY RESURFACING
Dairy Road to Laiewai Bridge
Federal Aid Project No. NH-083-1(072)
Scale: As Shown   Date: Feb. 2015

SHEET No. T27 OF 32 SHEETS

FED. ROAD DIST. NO.	STATE	FED. AID PROJ. NO.	FISCAL YEAR	SHEET NO.	TOTAL SHEETS
HAWAII	HAW.	NH-083-1(072)	2015	99	107

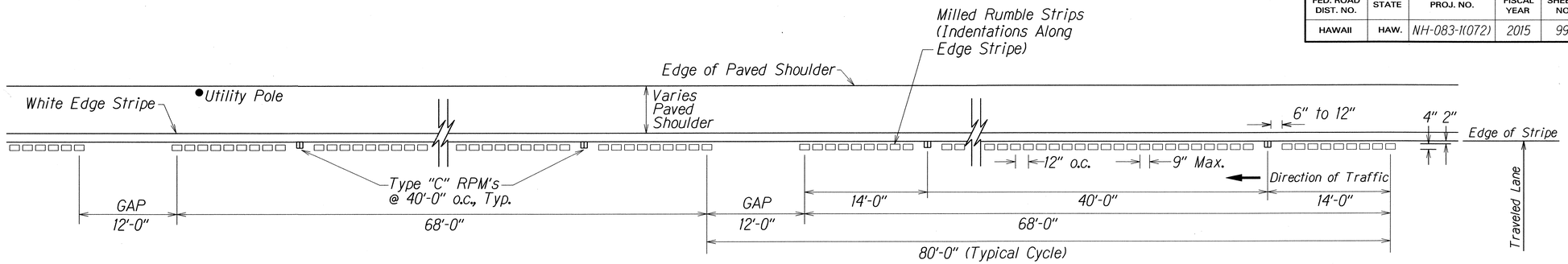

PLAN - MODIFIED EDGELINE MILLED RUMBLE STRIP (IN TRAVEL LANE)
Not to Scale

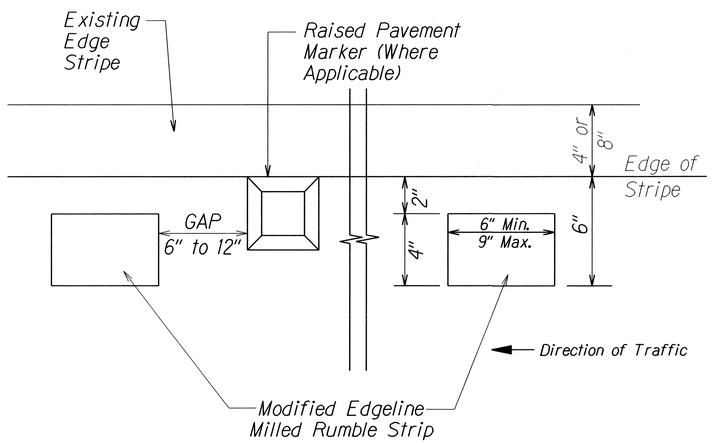

DETAIL - MODIFIED EDGELINE MILLED RUMBLE STRIP
Not to Scale

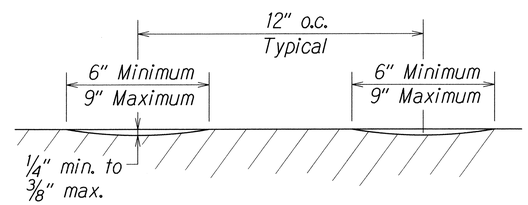

CROSS SECTION - MODIFIED EDGELINE MILLED RUMBLE STRIP
Not to Scale

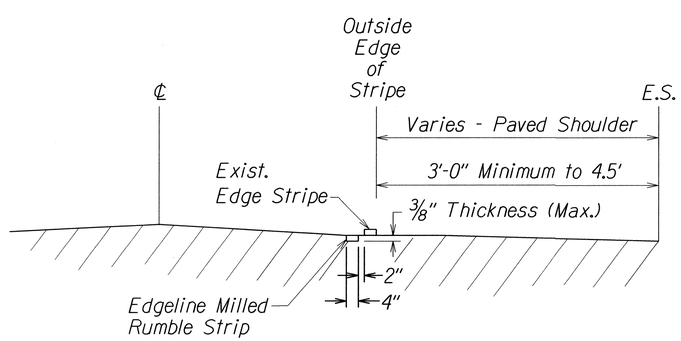

LONGITUDINAL SECTION - MODIFIED EDGELINE MILLED RUMBLE STRIP
Not to Scale

NOTES:

1. The method of constructing the modified edgeline milled rumble strip shall be submitted to the Engineer for acceptance prior to the actual work.
2. Dimensions shown are approximate. Adjust rumble strip spacing to coordinate with pavement marking prior to installation.
3. The construction of the modified edgeline milled rumble strip and 12-foot gaps shall be paid for under Item No. 615.0400 - 4-Inch Milled Rumble Strip, Modified Edgeline.
4. The milling apparatus will not be paid for separately and shall be considered incidental to Item 615.0400 - 4-Inch Milled Rumble Strip, Modified Edgeline.
5. Rumble strips shall be installed along all shoulders, except at right turn deceleration and acceleration lanes, as noted on the plans.
6. Do not install modified edgeline rumble strips on bridge decks.
7. Where at-grade bridges are present, rumble strips shall end/begin 20 L.F. beyond the existing bridge deck joints/concrete approach slab.

ORIGINAL PLAN	SURVEY PLOTTED BY	DATE
	DRAWN BY	
	TRACED BY	
NOTE BOOK	DESIGNED BY	
	QUANTITIES BY	
No.	CHECKED BY	

STATE OF HAWAII
DEPARTMENT OF TRANSPORTATION
HIGHWAYS DIVISION

MODIFIED EDGELINE MILLED RUMBLE STRIP DETAIL FOR TRAVEL LANE

KAMEHAMEHA HIGHWAY RESURFACING
Dairy Road to Laeiwai Bridge
Federal Aid Project No. NH-083-1(072)

Scale: As Shown Date: Feb., 2015

SHEET No. T28 OF 32 SHEETS

FED. ROAD DIST. NO.	STATE	FED. AID PROJ. NO.	FISCAL YEAR	SHEET NO.	TOTAL SHEETS
HAWAII	HAW.	NH-083-1(072)	2015	100	107

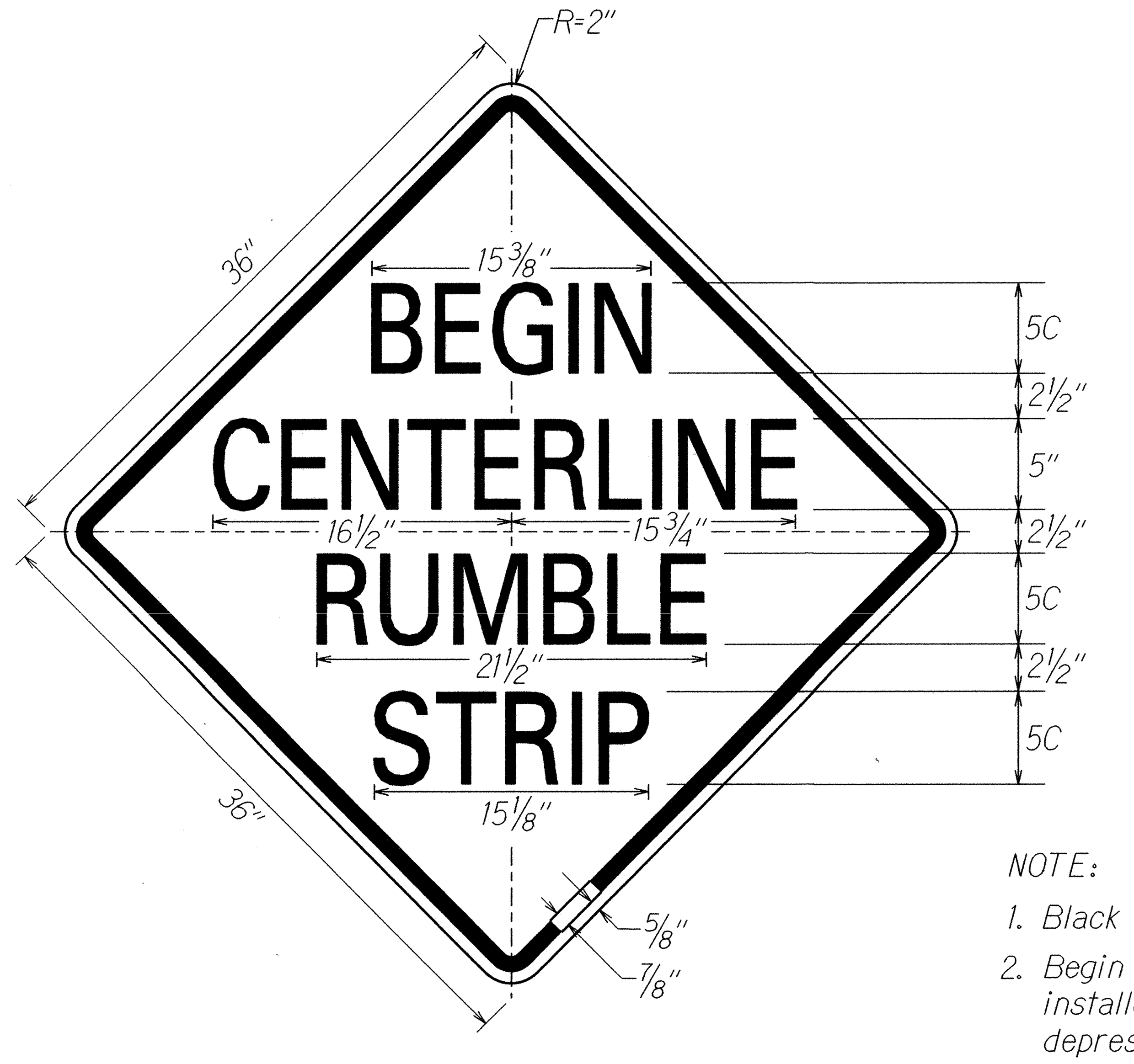

W8-14a

NOTE:

1. Black legend on reflectorized yellow background.
2. Begin Centerline Rumble Strip signs shall be installed 50 feet before the first rumble strip depression. End Centerline Rumble Strip signs shall be installed 50 feet beyond the last rumble strip depression.

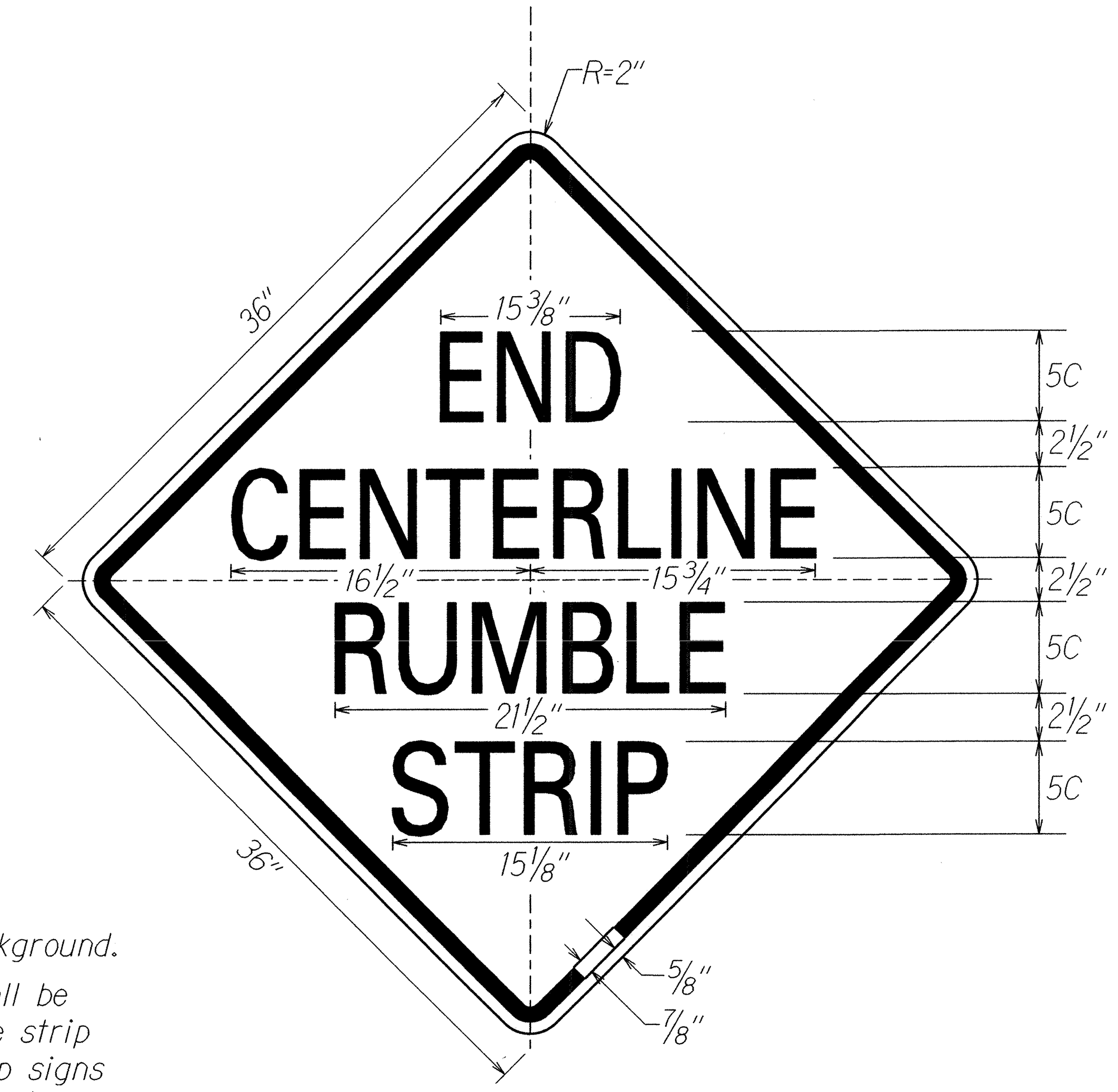

W8-14b

SIGN NOTES

1. All signs shall conform to Section 621 of the Special Provisions and the latest editions and amendments of the following FHWA publications:
   a. "Manual on Uniform Traffic Control Devices for Streets and Highways" (MUTCD)
   b. "Standard Highway Signs"
   c. "Standard Alphabets for Highway Signs"
2. Borders, messages, arrows, symbols and shield shall conform to details as shown on the plans and as specified in the MUTCD.
3. Sign messages shall be as indicated on the plan, or as directed by the Engineer.
4. Backing for all new Regulatory and Warning Signs shall not be spliced.
5. Final locations of all signs shall be accepted by the Engineer prior to any installation work.
6. Existing signs that are to be replaced, shall not be removed until new signs are installed as replacements, or the messages are no longer necessary.
7. Existing signs not shown on these plans shall remain as posted unless otherwise directed by the Engineer. Removal and disposal of existing signs and/or posts as designated on these plans shall be incidental to the various signing items.
8. All signs shall be installed on square tube posts, unless otherwise noted.
9. Each sign post shall have a Type II OM. Installation of Type II OM shall be considered incidental to sign items.
10. Contractor shall mark the back of all signs using labels. Payment to be incidental to various contract items.

STATE OF HAWAII
DEPARTMENT OF TRANSPORTATION
HIGHWAYS DIVISION

CENTERLINE RUMBLE STRIP
SIGN DETAILS AND NOTES

KAMEHAMEHA HIGHWAY RESURFACING
Dairy Road to Laiewai Bridge
Federal Aid Project No. NH-083-1(072)

Not to Scale Date: Feb., 2015

SHEET No. T29 OF 32 SHEETS

FED. ROAD DIST. NO.	STATE	FED. AID PROJ. NO.	FISCAL YEAR	SHEET NO.	TOTAL SHEETS
HAWAII	HAW.	NH-083-1(072)	2015	101	107

TRAFFIC SIGNAL NOTES

1. The locations of the Traffic Signal Standards, Traffic Signal Standards w/Mast Arms, Pedestrian Push Buttons, Traffic Controller, Pullboxes, Conduits and Loop Detectors shall be staked out in the field by the Contractor and approval of the locations shall be obtained from the Engineer prior to construction and installation.
2. All splicing shall be done in the pullboxes.
3. Furnishing and installing the conduit stubouts (pullboxes to edge of pavement) will not be paid for separately but shall be considered incidental to the various contract items.
4. A solid #8 bare copper wire shall be pulled with the traffic signal control cable for equipment ground. Cost shall be incidental to the installation of the control cable.
5. All Traffic signal controller equipment shall be completely wired in the cabinet and shall control the traffic signals as called for in the plans.
6. The loop amplifier units furnished for this project shall be capable of operating the loop detector configurations shown on the plans. Cost for the loop amplifier shall be incidental to the installation of the loop detector.
7. Should any defect be encountered during the warranty period, the manufacturer will be notified and he shall promptly correct such defect. Service call (by factory qualified representative) during the warranty period for repairs or other maintenance shall be answered within 24 hours and shall be done at no expense to the State. All repairs shall be done as soon as possible.
8. All traffic signal work shall conform to the requirements of the "Manual On Uniform Traffic Control Devices For Streets And Highways", Federal Highway Administration (1988) and Amendments.
9. Locations of traffic markings and markers (lane lines, Stop lines, crosswalk, etc.) shown on the plans shall be verified with the Engineer prior to the installation of the traffic signal system.
10. All Conduits between pullboxes and Traffic Signal/Highway Lighting Standards shall not be paid for separately but shall be considered incidental to the various contract items.
11. All Signal-Drop Cables (Type 5 Cables) from the various Types of Traffic Signal Head on the traffic signal standards and mast arms to the pullboxes shall not be paid for separately but considered incidental to the Traffic Signal Head.
12. After installing all the traffic signal cables, the Contractor shall duct seal all conduits in the pullboxes, traffic signal standards and traffic signal controller cabinet concrete base. The duct seal material shall be approved by the Traffic Signal Inspector/Engineer and shall not be paid for separately but considered incidental to the direct buried and/or concrete encased conduits.
13. After installing the Traffic Signal System, the Contractor shall apply grease to all parts of the Traffic Signal System (i.e. fittings, brackets, nipples, elbows, screws, signal head assemblies, bolts, hinges, etc.) as directed by the Traffic Signal Inspector, to prevent rust and corrosion. The grease material shall be approved by the Signal Inspector.
14. Connecting into existing traffic signal system and making all necessary adjustments shall not be paid for separately, but considered incidental to the various traffic signal contract items.
15. The Contractor shall notify the Traffic Control Branch, Department of Transportation Services, City & County of Honolulu, (Phone No. 768-8388) two weeks prior to commencing any work on the traffic signal system.

TRAFFIC SIGNAL LEGEND

NEW	EXISTING	
		Traffic Signal Conduit
1 2 3	1 2 3	Conduit Run Numbers
A B C	A B C	Equipment description, installation or item no.
M	M	Traffic Signal Master Controller Door Indicates Front of Cabinet
C	C	Traffic Signal Controller Door Indicates Front of Cabinet
		Meter Pedestal
		12" RYG Traffic Signal Head
		12" ↑ R↑Y↑G Traffic Signal Head
		12" ← R←Y←G Traffic Signal Head
		12" ← R←Y←G Traffic Signal Head (Programmed Visibility)
		12" RYG ←G/Y Fiber Optic Traffic Signal Head
		Type I Standard and Attached Signals
24' 12'		Type II Standard with Signal Mast Arm and Attached Signals (Nos. indicates mast arm length & distance between signal heads as specified on plans)
8' 24' 12'		Type III Standard with Luminaire and Signal Mast Arm and Attached Signals (Nos. indicates mast arm lengths & distance between signal heads as specified on plans)
Y	Y	Flashing Beacon, One Signal Section, "Y" indicates 12" Yellow Lens
		Opticom Receiver (Arrow indicates direction detector faces)
		Pipe Guard
		Pedestrain Signal Head
	tspb	Type A Pullbox
	tspb	Type B Pullbox
	tspb	Type C Pullbox
		Loop Detectors

HIGHWAY LIGHTING LEGEND

NEW	EXISTING	
HL	hl	Highway Lighting Conduit
	hl	Type A Pullbox (Hwy. Ltg.)
		Highway Lighting Standard

ORIGINAL PLAN	SURVEY PLOTTED BY	DATE
	DRAWN BY	
	TRACED BY	
NOTE BOOK	DESIGNED BY	
No.	QUANTITIES BY	
	CHECKED BY	

STATE OF HAWAII
DEPARTMENT OF TRANSPORTATION
HIGHWAYS DIVISION

TRAFFIC SIGNAL NOTES AND LEGEND

KAMEHAMEHA HIGHWAY RESURFACING
Dairy Road to Laiewai Bridge
Federal Aid Project No. NH-099-1(029)

Scale: As Noted — Date: Feb., 2015

SHEET No. T30 OF 32 SHEETS

FED. ROAD DIST. NO.	STATE	FED. AID PROJ. NO.	FISCAL YEAR	SHEET NO.	TOTAL SHEETS
HAWAII	HAW.	NH-083-1(072)	2015	102	107

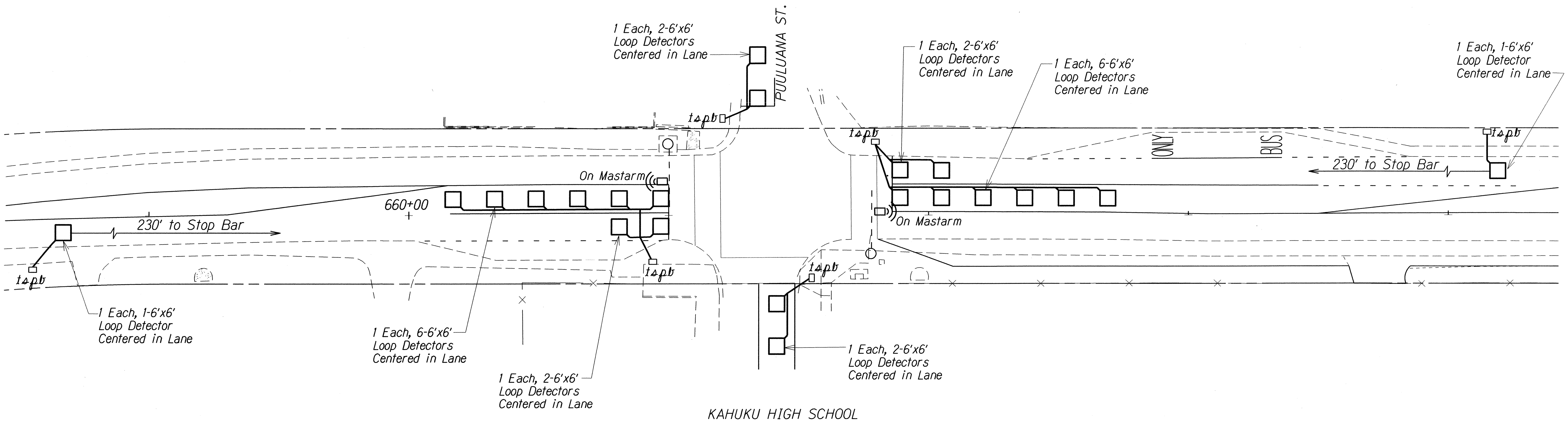

NOTES:

1. Install Temporary Microwave Detectors on existing traffic signal pole. Install No. 16, 4 Conductor Cable in existing conduits from detector to controller. The cost of the cable shall be incidental to the cost of the microwave detector.
2. Loop detector location and quantity shown on this plan are only approximate. Contractor shall coordinate with C&C DTS Signal Shop (Supervisor Wally Nakihira @ 564-6101) for all traffic signal-related work. Schedule with C&C DTS Signal Shop at least two weeks in advance of the actual work, including pavement cold planing and removing the existing loop detector.
3. Contractor shall perform all traffic signal-related work following field instructions from DTS Signal Shop personnel. Such field instructions shall include, but not limited to, the final location and quantity of the temporary microwave sensors and permanent detector loops. DTS Signal Shop personnel will be responsible for traffic signal controller programming at the traffic signal cabinet to accommodate the temporary and permanent operations.
4. Contractor shall promptly take down and turn over the temporary microwave sensors to DTS when the permanent detector loops are in place and operational. Contractor shall perform all necessary work to restore traffic signal system back to a neat appearance of the electrical trade.

TRAFFIC SIGNAL LEGEND

- Temporary Microwave Detector
- tsp Existing Traffic Signal Pole
- New Loop Detectors

ORIGINAL PLAN / NOTE BOOK / No.
SURVEY PLOTTED BY / DRAWN BY / TRACED BY / DESIGNED BY / QUANTITIES BY / CHECKED BY / DATE

STATE OF HAWAII
DEPARTMENT OF TRANSPORTATION
HIGHWAYS DIVISION

LOOP DETECTOR PLAN

KAMEHAMEHA HIGHWAY RESURFACING
Dairy Road to Laiewai Bridge
Federal-Aid Project No. NH-083-1(072)

Scale: 1"=20' Date: Feb., 2015

SHEET No. T31 OF 32 SHEETS

FED. ROAD DIST. NO.	STATE	FED. AID PROJ. NO.	FISCAL YEAR	SHEET NO.	TOTAL SHEETS
HAWAII	HAW.	NH-083-1(072)	2015	103	107

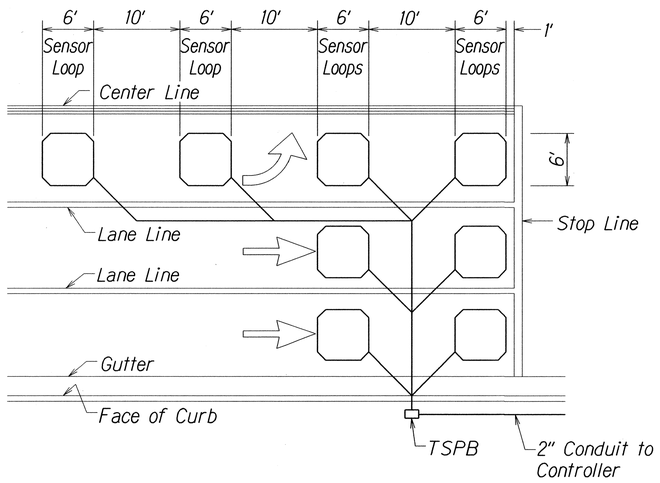

NOTES:

1. Center sensor loops in lanes.
2. Collector cables shall be twisted 2 turns per foot.
3. Number of loops and locations vary. See project plans.
4. Number and locations of collector sawcuts may be varied in the field to suit.

TYPICAL SENSOR LOOP LAYOUT

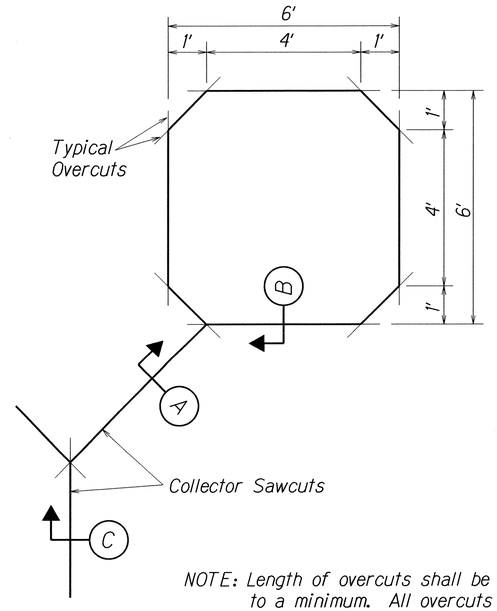

NOTE: Length of overcuts shall be kept to a minimum. All overcuts shall be back filled with hot tar.

TYPICAL SENSOR LOOP SAWCUT DETAIL

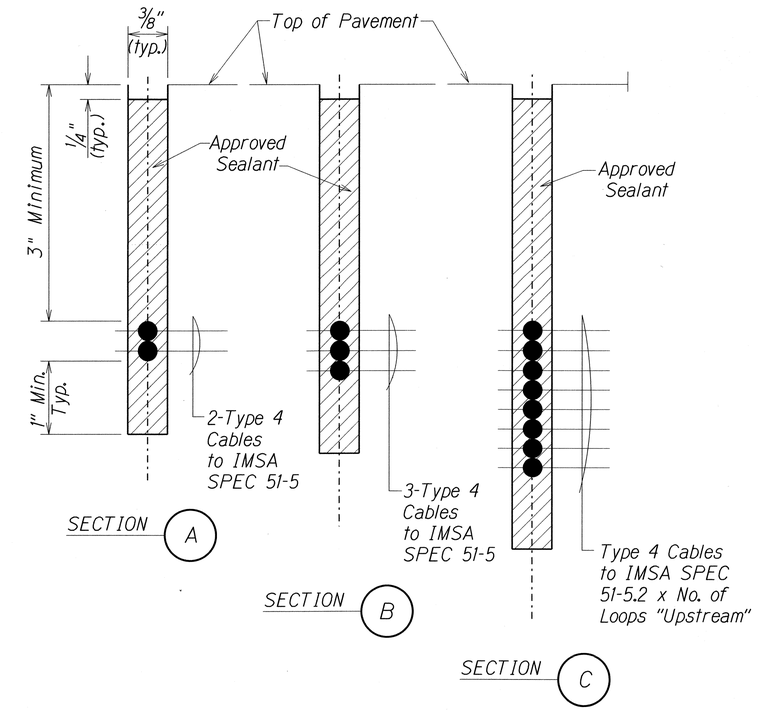

TYPICAL SECTION THROUGH SENSOR LOOP

Not to Scale

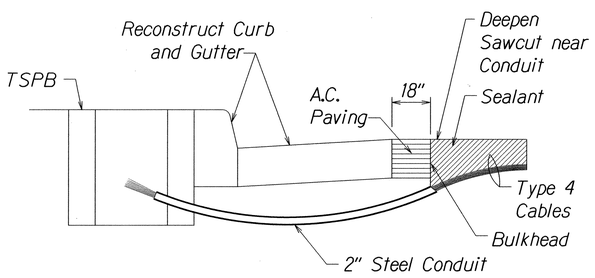

NOTES ON CONSTRUCTION AT END OF SAWCUT

1. Seal roadway end of conduit after installation of conductors.
2. Install bulkhead across conduit trench.
3. Place hot tar in sawcut.
4. Backfill over conduit with new A.C.
5. Reconstruct curb and gutter as required.

DETAIL OF SENSOR LOOP INSTALLATION AT EDGE OF ROADWAY

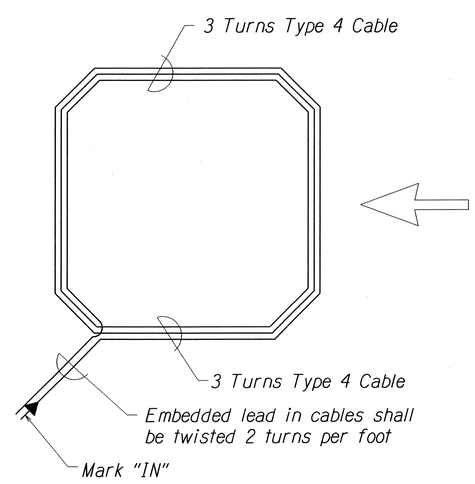

TYPICAL SENSOR LOOP WIRING DIAGRAM

Not to Scale

ORIGINAL PLAN	SURVEY PLOTTED BY	DATE
	DRAWN BY X	
	TRACED BY X	
NOTE BOOK	DESIGNED BY X	
	QUANTITIES BY	
N.	CHECKED BY	

STATE OF HAWAII
DEPARTMENT OF TRANSPORTATION
HIGHWAYS DIVISION

LOOP DETECTOR DETAILS

KAMEHAMEHA HIGHWAY RESURFACING
Dairy Road to Laiewai Bridge
Federal Aid Project No. NH-083-1(072)

Scale: As Shown Date: Feb., 2015

SHEET No. T32 OF 32 SHEETS