FED. ROAD DIST. NO.	STATE	FED. AID PROJ. NO.	FISCAL YEAR	SHEET NO.	TOTAL SHEETS
HAWAII	HAW.	BR-083-1(42)	2009	C.O.40	121

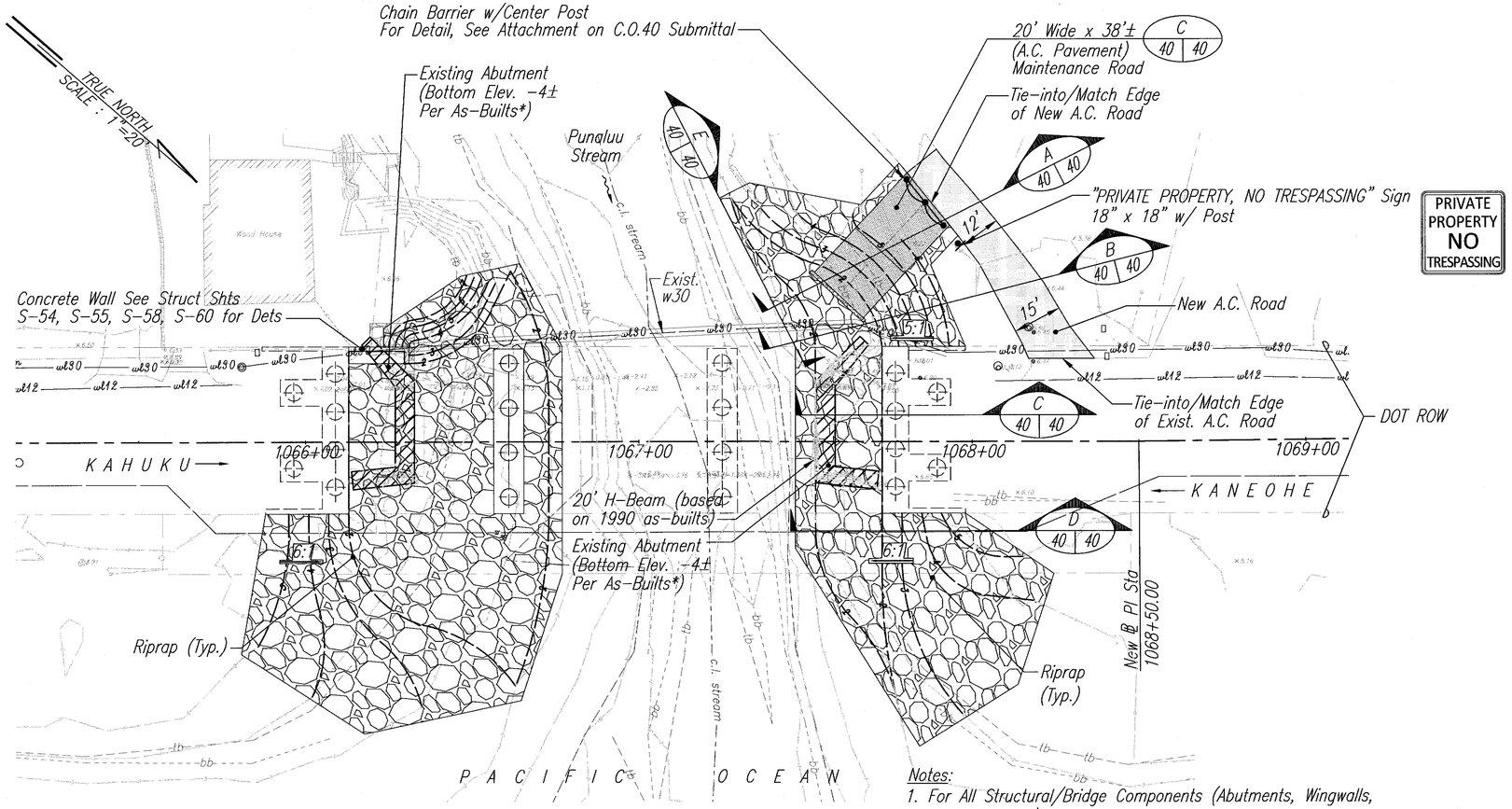

STREAMWORK

SCALE: 1"=20'

Notes:

1. For All Structural/Bridge Components (Abutments, Wingwalls, Piers, etc.) See Struct Shts for Details.
2. Demolish Exist Bridge Supports to Mudline (See Struct Shts)
3. GRP is for Erosion Protection Purpose Only.
4. Abutment Scour is Protected by Drilled Shaft.

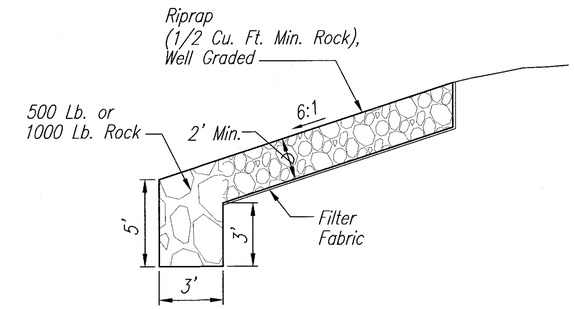

D 40 40 **SECTION "D-D"**

Not to Scale

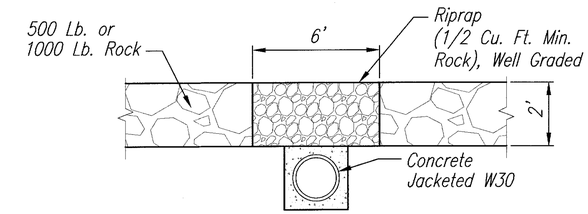

E 40 40 **SECTION "E-E"**

Not to Scale

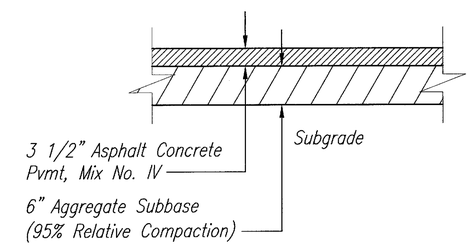

A.C. ROAD PAVEMENT STRUCTURE

Not to Scale

*Note:
As-Builts Referencing Kamehameha Highway Project I, 1925

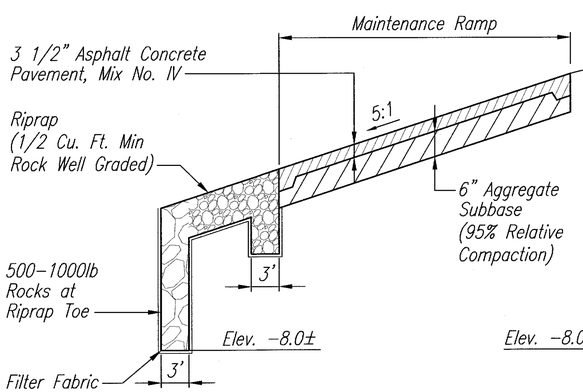

A 40 40 **SECTION AT MAINTENANCE ROAD**

Not to Scale

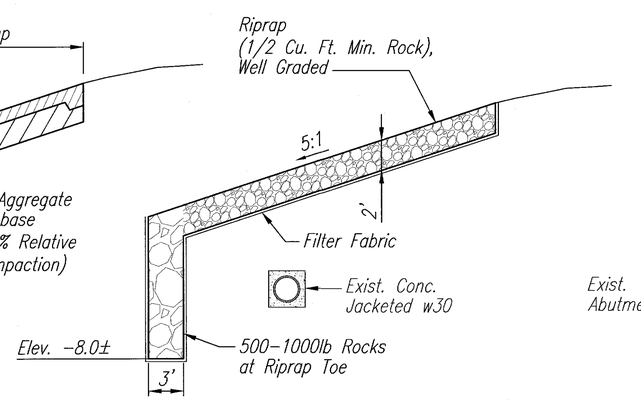

B 40 40 **SECTION "B-B"**

Not to Scale

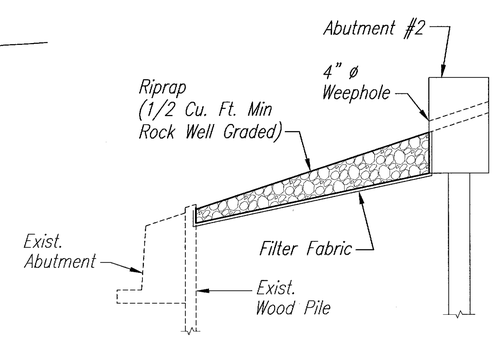

C 40 40 **SECTION "C-C"**

Not to Scale

3/9/12	3	Added Chain Barrier & "No Trespassing" Sign
11/3/10	2	Riprap in Lieu of GRP; Revised Maint. Ramp from Conc. to A.C.; Added New A.C. Road.
9/23/10	1	Revised GRP Limits

MINGXUN DING
LICENSED PROFESSIONAL ENGINEER
NO. 9246-C
HAWAII, U.S.A.

THIS WORK WAS PREPARED BY ME OR UNDER MY SUPERVISION.

SIGNATURE

4/30/16
EXPIRATION DATE OF LICENSE

STATE OF HAWAII
DEPARTMENT OF TRANSPORTATION
HIGHWAYS DIVISION

STREAM BANK STABILIZATION

KAMEHAMEHA HIGHWAY – REPLACEMENT OF SOUTH PUNALUU STREAM BRIDGE
Federal Aid Project No. BR-083-1(42)

Scale: As Shown Date: May 2009

SHEET No. C40 OF 40 SHEETS

C.O.40

ORIGINAL PLAN
SURVEY PLOTTED BY
DRAWN BY
TRACED BY
DESIGNED BY
QUANTITIES BY
CHECKED BY
DATE
NOTE BOOK
No.