FED. ROAD DIST. NO.	STATE	PROJ. NO.	FISCAL YEAR	SHEET NO.	TOTAL SHEETS
HAWAII	HAW.	NH-083-1(082)	2022	ADD 77	99

Water Line "A" Sta. 0+15.85
=Kah ℄ Sta. 238+62.99, o/s 42.12' Rt.
Begin R.C. Jacket

Water Line "A" Sta. 0+00.0
=Kah ℄ Sta. 238+51.45 o/s 34.68' Rt.
Begin Water Line "A"
Connect to exist. w8
Contractor to verify invert and location
1-8" Ductile Iron Pipe
MATERIALS FOR CONNECTION:
Tapping Tee Sleeve, 20" long
Tapping Valve and Box
67 LF, 8" Ductile Iron Pipe, Class 53
TEMPORARY FOR TESTING:
1-8" Cap Tapped for 2.5" IPT
1-2.5" Cleanout
1-Conc. block (Temp. for testing)

Water Line "A" Sta. 0+07.29
=Kah ℄ Sta. 238+55.03, o/s 41.00' Rt.
1-8" 1/8 Bend (H), 1-Conc. Block

Water Line "A" Sta. 0+14.35
=Kah ℄ Sta. 238+61.71, o/s 42.87' Rt.
1-8" 1/8 Bend (H), 1-Conc. Block

Water Line "A" Sta. 0+17.35
=Kah ℄ Sta. 238+64.27, o/s 41.38' Rt.
1-8" 1/8 Bend (T.V.)

Water Line "A" Sta. 0+22.04
=Kah ℄ Sta. 238+68.27, o/s 39.06'
Rt.

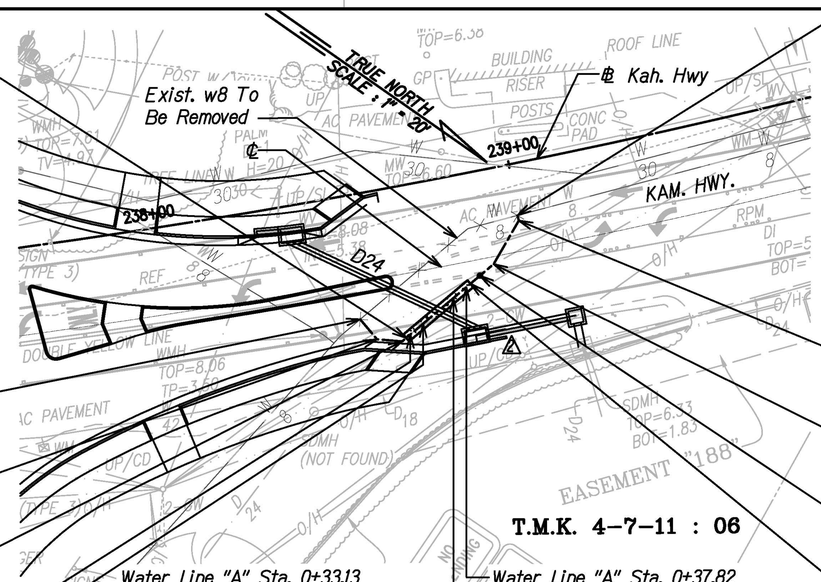

Water Line "A" Sta. 0+33.13
=Kah ℄ Sta. 238+77.77, o/s 33.61'
Rt.
1-8" 1/8 Bend (B.V.)

Water Line "A" Sta. 0+37.82
=Kah ℄ Sta. 238+81.80, o/s 31.32' Rt.
1-8" 1/8 Bend (T.V.)

Water Line "A" Sta. 0+63.37
=Kah ℄ Sta. 238+99.55, o/s 14.44' Rt.
End Water Line "A"
Connect to exist. w8
Contractor to verify invert and location
1-8" Ductile Iron Fitting
MATERIALS FOR CONNECTION:
Tapping Tee Sleeves, 20" long
Tapping Valve and Box
67 LF, 8" Ductile Iron Pipe, Class 53
TEMPORARY FOR TESTING:
1-8" Cap Tapped for 2.5" IPT
1-2.5" Cleanout
1-Conc. block (Temp. for testing)

Water Line "A" Sta. 0+61.88
=Kah ℄ Sta. 238+99.64, o/s 15.92'
Rt.

Water Line "A" Sta. 0+47.82
=Kah ℄ Sta. 238+90.43, o/s 26.46' Rt.
1-8" 1/18 Bend (H), 1-Conc. Block

Water Line "A" Sta. 0+42.82
=Kah ℄ Sta. 238+86.11, o/s 28.89' Rt.
1-12" DBL Hub Tee w/Boss tapped for ¾"
ARV
1-3/4" Air Relief Valve
(WP=0-150 psi)

Water Line "A" Sta. 0+39.32
=Kah ℄ Sta. 238+83.10, o/s 30.59' Rt.
End R.C. Jacket

UTILITY RELOCATION PLAN - WATERLINE "A"

Scale 1"=20'

NOTES:

1. Remove Existing w8 Between Sta. 238+51.45± and Sta. 238+99.55±.
2. For Reinforced Concrete Jacket Detail, See Board of Water Supply Standard Plan B1, Dated 2002.

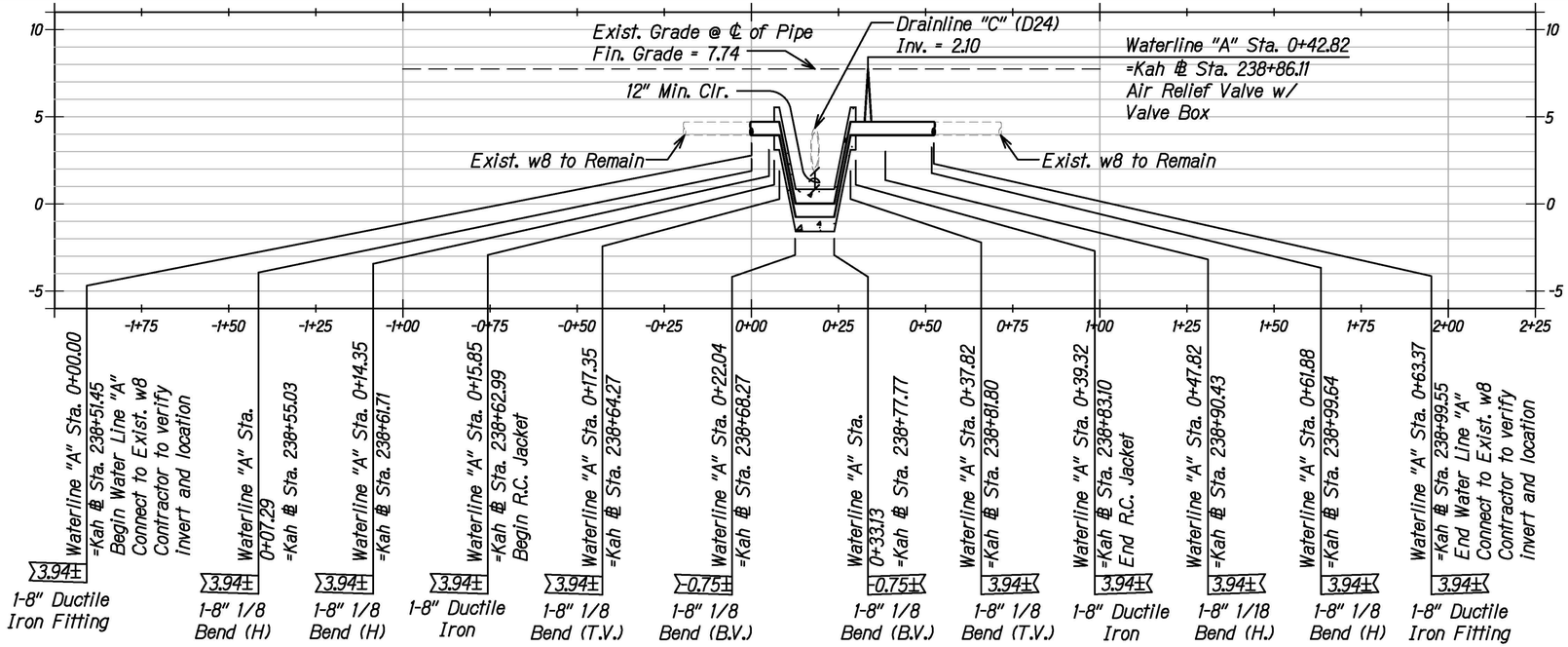

PROFILE - WATERLINE "A"

Scale: Horiz. 1"=20'
Vert. 1"=4'

APPROVED:

MANAGER & CHIEF ENIGINEER, BWS
(For Work Affecting BWS Facilities in City/State Right-of-Way and BWS Easement only

DATE

Date	Revision
10/11/2022	Revised Background Information
08/31/2022	Added BWS Signature

STATE OF HAWAII
DEPARTMENT OF TRANSPORTATION
HIGHWAYS DIVISION

JOSEPH R. SALVADOR
LICENSED PROFESSIONAL ENGINEER
No. 14094-C
HAWAII, U.S.A.

THIS WORK WAS PREPARED BY ME OR UNDER MY SUPERVISION.

SIGNATURE — EXPIRATION DATE OF THE LICENSE 04/2024

WATERLINE RELOCATION PLAN & PROFILE - 1

KAMEHAMEHA HIGHWAY
INTERSECTION IMPROVEMENTS
AT KAHEKILI HIGHWAY
Federal-Aid Project No. NH-083-1(082)

Scale: As Shown — Date: Sept. 2022

SHEET No. U-1 OF 8 SHEETS

ORIGINAL PLAN — STORMY PLOTTED BY — DRAWN BY — TRACED BY — DESIGNED BY — QUANTITIES BY — CHECKED BY — DATE — NOTE BOOK — No.

ADD 77

FED. ROAD DIST. NO.	STATE	PROJ. NO.	FISCAL YEAR	SHEET NO.	TOTAL SHEETS
HAWAII	HAW.	NH-083-1(082)	2022	ADD 78	99

Water Line "B" Sta. 0+11.55
=Kah ℄ Sta. 237+52.90, o/s 125.69' Rt.
1-8" 1/8 Bend (T.V.)

Water Line "B" Sta. 0+08.55
=Kah ℄ Sta. 237+50.75, o/s 127.65' Rt.
1-8" 1/8 Bend (H), 1-Conc. Block

Water Line "B" Sta. 0+00.0
=Kah ℄ Sta. 237+43.17 o/s 126.02' Rt.
Begin Water Line "B"
Connect to exist. w8
Contractor to verify invert and location
1-8" Ductile Iron Pipe
MATERIALS FOR CONNECTION:
Tapping Tee Sleeve, 20" long
Tapping Valve and Box
55 LF, 8" Ductile Iron Pipe, Class 53
TEMPORARY FOR TESTING:
1-8" Cap Tapped for 2.5" IPT
1-2.5" Cleanout
1-Conc. Block (Temp. for testing)

Water Line "B" Sta. 0+01.49
=Kah ℄ Sta. 237+44.09, o/s 127.14' Rt.
1-8" 1/8 Bend (H), 1-Conc. Block

Water Line "B" Sta. 0+10.05
=Kah ℄ Sta. 237+51.82, o/s 126.67' Rt.
Begin Conc. Jacket

Water Line "B" Sta. 0+15.63
=Kah ℄ Sta. 237+55.82, o/s 123.02' Rt.
1-8" 1/8 Bend (B.V.)

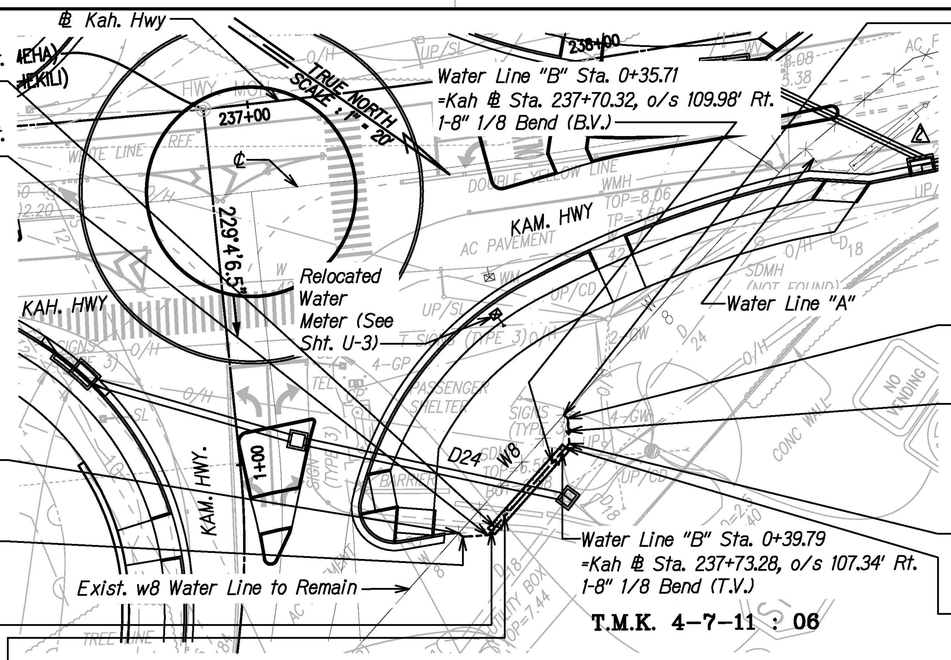

Water Line "B" Sta. 0+35.71
=Kah ℄ Sta. 237+70.32, o/s 109.98' Rt.
1-8" 1/8 Bend (B.V.)

Water Line "B" Sta. 0+39.79
=Kah ℄ Sta. 237+73.28, o/s 107.34' Rt.
1-8" 1/8 Bend (T.V.)

Water Line "B" Sta. 0+51.31
=Kah ℄ Sta. 237+75.14 o/s 97.25' Rt.
End Water Line "B"
Connect to exist. w8
Contractor to verify invert and location
1-8" Ductile Iron Pipe
MATERIALS FOR CONNECTION:
Tapping Tee Sleeve, 20" Long
Tapping Valve and Box
55 LF, 8" Ductile Iron Pipe, Class 53
TEMPORARY FOR TESTING:
1-8" Cap Tapped for 2.5" IPT
1-2.5" Cleanout
1-Conc. Block (Temp. for testing)

Water Line "A"

Water Line "B" Sta. 0+49.86
=Kah ℄ Sta. 237+76.04, o/s 98.36' Rt.
1-8" 1/8 Bend (H), 1-Conc. Block

Water Line "B" Sta. 0+46.32
=Kah ℄ Sta. 237+75.75, o/s 101.88' Rt.
1-12" DBL Hub Tee w/Boss tapped for ¾" ARV
1-3/4" Air Relief Valve, (WP=0-150 psi)
1-Valve Box

Water Line "B" Sta. 0+42.79
=Kah ℄ Sta. 237+75.47, o/s 105.41' Rt.
1-8" 1/8 Bend (H), 1-Conc. Block

Water Line "B" Sta. 0+41.29
=Kah ℄ Sta. 237+74.38, o/s 106.37' Rt.
End Conc. Jacket

UTILITY RELOCATION PLAN - WATERLINE "B"

Scale 1"=20'

NOTES:

1. Remove Existing w8 Between Sta. 237+43.17± and Sta. 237+75.14±.
2. For Reinforced Concrete Jacket Detail, See Board of Water Supply Standard Plan B1, Dated 2002.

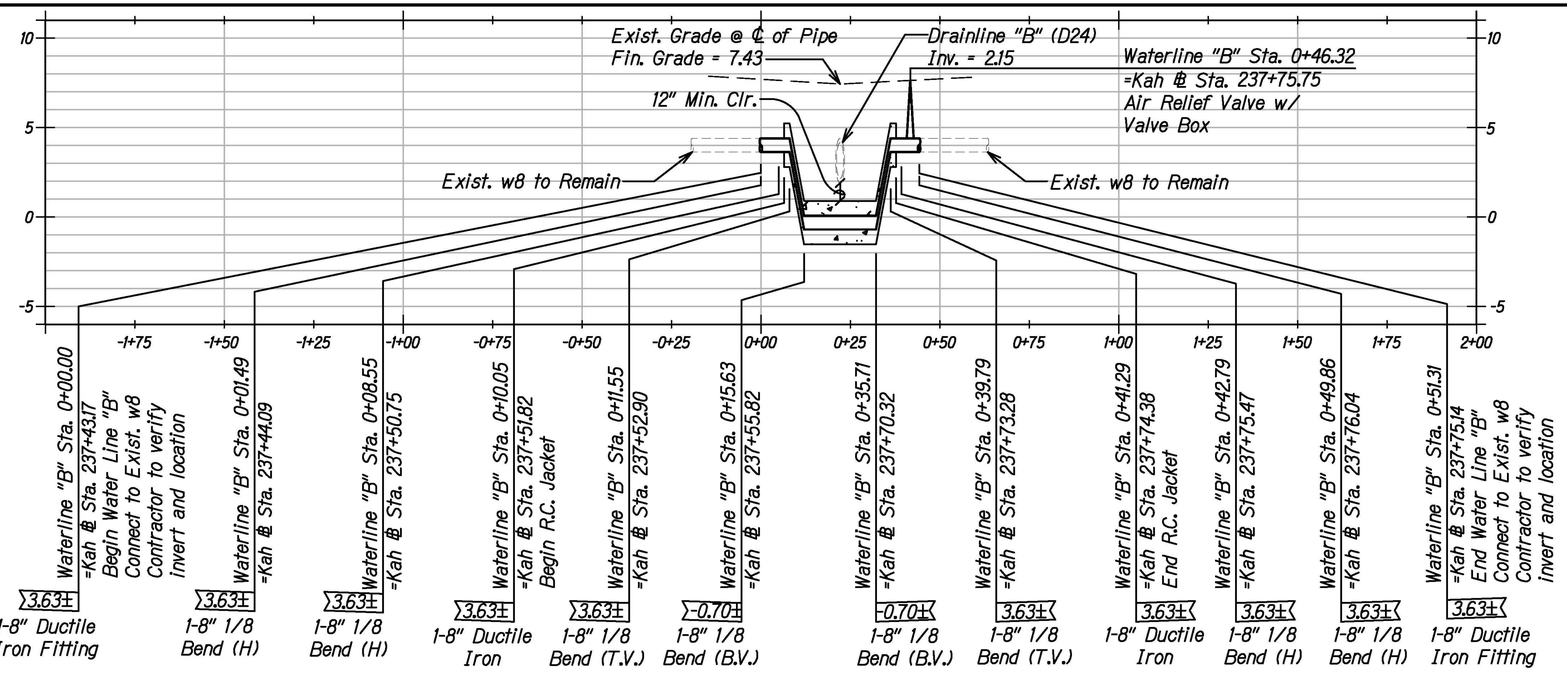

PROFILE - WATERLINE "B"

Scale: Horiz. 1"=20'
Vert. 1"=4'

⚠ APPROVED:

MANAGER & CHIEF ENIGINEER, BWS — DATE
(For Work Affecting BWS Facilities in City/State Right-of-Way and BWS Easement only

Date	Revision
10/11/2022	⚠ Revised Background Information
08/31/2022	⚠ Added BWS Signature

ORIGINAL PLAN | STUDY PLOTTED BY | DRAWN BY | NOTE BOOK | TRACED BY | DESIGNED BY | QUANTITIES BY | CHECKED BY | DATE | No.

JOSEPH R. SALVADOR — LICENSED PROFESSIONAL ENGINEER No. 14094-C — HAWAII, U.S.A.

THIS WORK WAS PREPARED BY ME OR UNDER MY SUPERVISION.

SIGNATURE — EXPIRATION DATE OF THE LICENSE 04/2024

STATE OF HAWAII
DEPARTMENT OF TRANSPORTATION
HIGHWAYS DIVISION

WATERLINE RELOCATION PLAN & PROFILE - 2

KAMEHAMEHA HIGHWAY
INTERSECTION IMPROVEMENTS
AT KAHEKILI HIGHWAY
Federal-Aid Project No. NH-083-1(082)

Scale: As Shown — Date: Sept. 2022

SHEET No. U-2 OF 8 SHEETS

ADD 78

FED. ROAD DIST. NO.	STATE	PROJ. NO.	FISCAL YEAR	SHEET NO.	TOTAL SHEETS
HAWAII	HAW.	NH-083-1(082)	2022	ADD 79	99

Exist. ¾" Meter (M/N: 90032153, and P/ID: 3920960648) to be Relocated.

Install New Type X Box in New Sidewalk. Remove Exist. 1½" Corp Stop. Install New 1½" Ball Corp. Relocate Exist. ¾" Meter (M/N: 90032153, and P/ID: 3920960648)

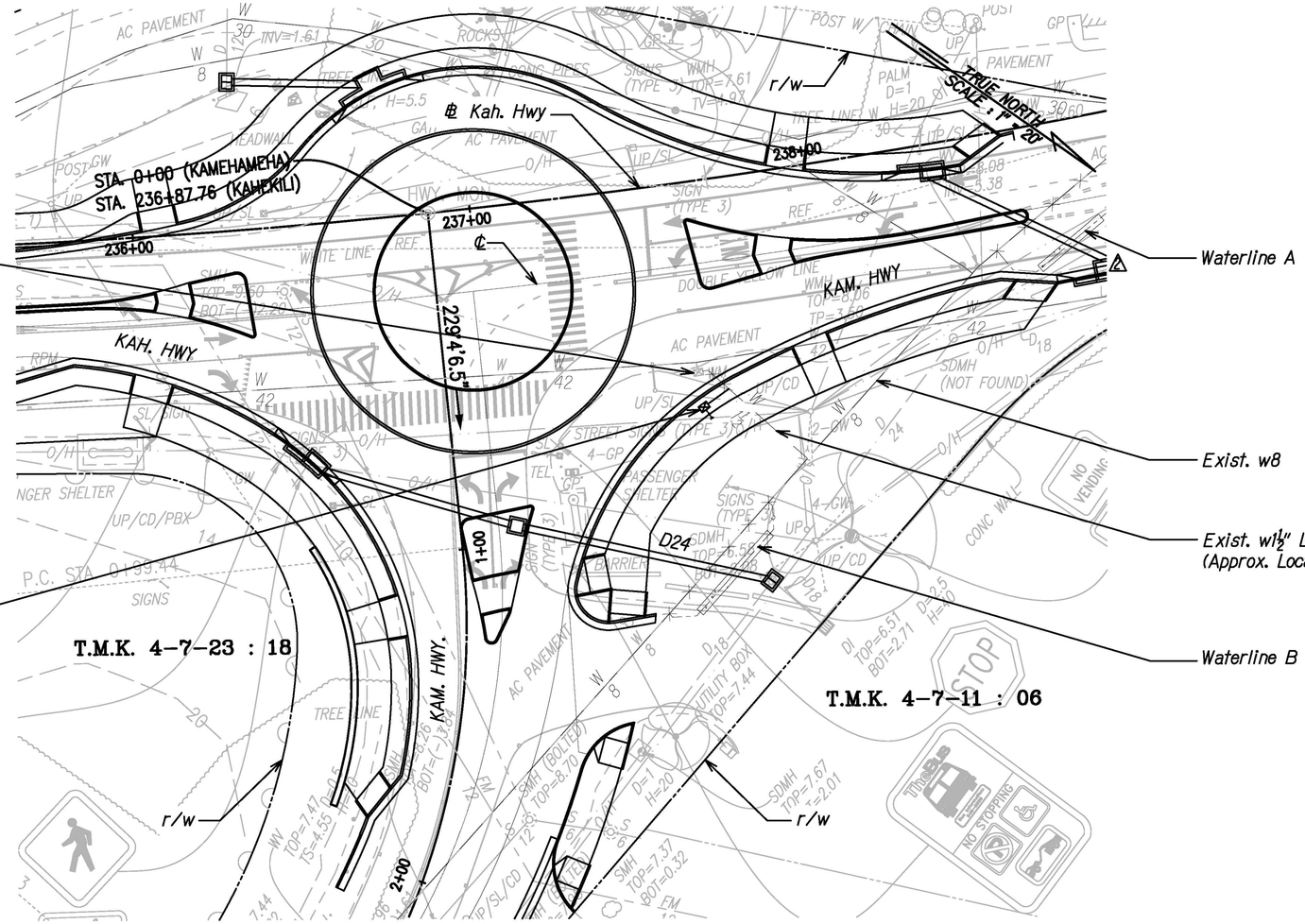

Note:

Contractor to relocate the existing ¾" water meter off-tee of the existing 1½" lateral with Type X meter box and reconnect to the existing property pipe. Contractor to cut and plug old lateral at tee. Contractor to remove and dispose of existing meter box. All relocation work to be coordinated with Board of Water Supply Inspector.

WATER METER RELOCATION PLAN

Scale 1"=20'

10/11/2022	Revised Background Information
08/31/2022	Added BWS Signature
Date	Revision

ORIGINAL PLAN	SURVEY PLOTTED BY
	DRAWN BY
NOTE BOOK	TRACED BY
	DESIGNED BY
	QUANTITIES BY
No.	CHECKED BY
	DATE

APPROVED:

MANAGER & CHIEF ENIGINEER, BWS — DATE
(For Work Affecting BWS Facilities in City/State Right-of-Way and BWS Easement only

JOSEPH R. SALVADOR
LICENSED PROFESSIONAL ENGINEER
No. 14094-C
HAWAII, U.S.A.

THIS WORK WAS PREPARED BY ME OR UNDER MY SUPERVISION.

SIGNATURE — EXPIRATION DATE OF THE LICENSE 04/2024

STATE OF HAWAII
DEPARTMENT OF TRANSPORTATION
HIGHWAYS DIVISION

WATER METER RELOCATION PLAN

KAMEHAMEHA HIGHWAY INTERSECTION IMPROVEMENTS AT KAHEKILI HIGHWAY
Federal-Aid Project No. NH-083-1(082)

Scale: As Shown — Date: Sept. 2022

SHEET No. U-3 OF 8 SHEETS

ADD 79

FED. ROAD DIST. NO.	STATE	PROJ. NO.	FISCAL YEAR	SHEET NO.	TOTAL SHEETS
HAWAII	HAW.	NH-083-1(082)	2022	ADD 80	99

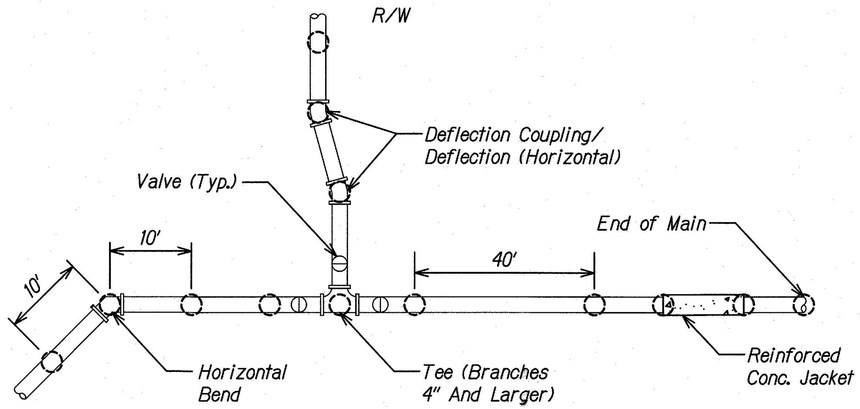

PLAN VIEW
Not to Scale

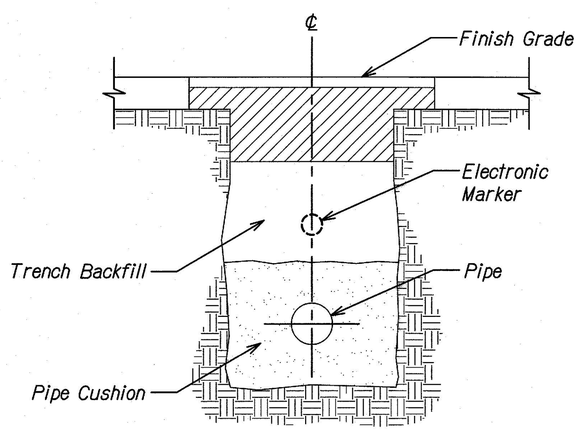

SECTION VIEW
Not to Scale

LEGEND

◯ Electronic Marker

NOTES:

1. Install electronic marker over centerline of pipe at a minimum depth of 2 feet and a maximum depth of 3 feet from finish grade.
2. Install Trench Backfill and Pipe Cushion material in accordance to the plans and specifications.
3. Install electronic marker at a minimum clearance of 6-inches, where possible. Install markers on or above concrete jacket.

TYPICAL ELECTRONIC MARKER INSTALLATION

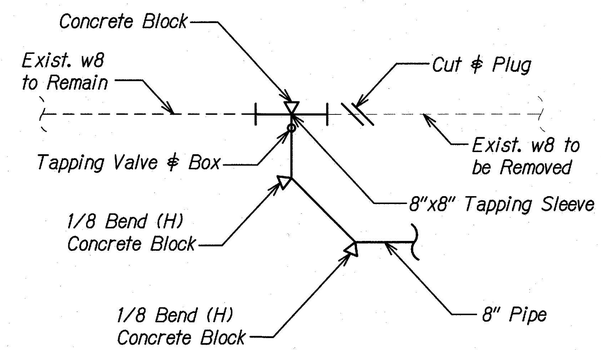

SCHEMATIC CONNECTION
WATERLINE A STA. 0+00.00
Not to Scale

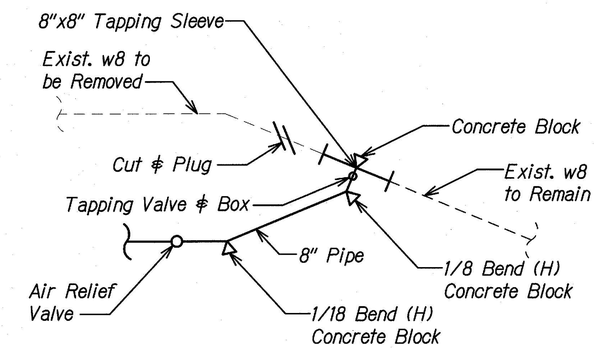

SCHEMATIC CONNECTION
WATERLINE A STA. 0+63.37
Not to Scale

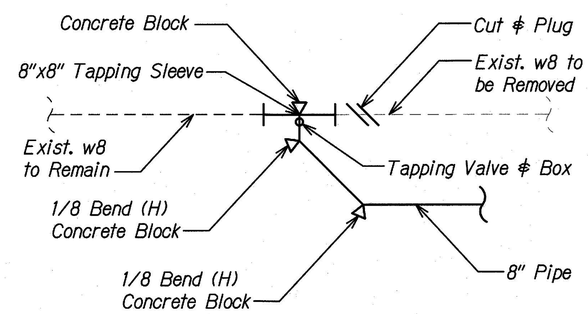

SCHEMATIC CONNECTION
WATERLINE B STA. 0+00.00
Not to Scale

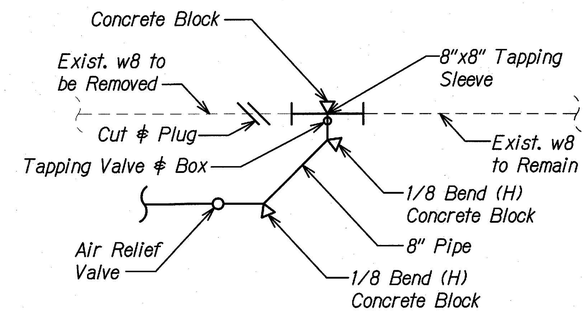

SCHEMATIC CONNECTION
WATERLINE B STA. 0+51.31
Not to Scale

SCHEMATIC CONNECTION DETAILS

Date	Revision
08/31/2022	⚠ Added BWS Signature

⚠

APPROVED:

SEP 2 1 2022

FOR MANAGER & CHIEF ENIGINEER, BWS DATE
(For Work Affecting BWS Facilities in
City/State Right-of-Way and BWS Easement only

JOSEPH R. SALVADOR
LICENSED PROFESSIONAL ENGINEER
No. 14094-C
HAWAII, U.S.A.

THIS WORK WAS PREPARED BY ME OR UNDER MY SUPERVISION.

SIGNATURE — EXPIRATION DATE OF THE LICENSE 04/2024

STATE OF HAWAII
DEPARTMENT OF TRANSPORTATION
HIGHWAYS DIVISION

MISCELLANEOUS WATERLINE RELOCATION DETAILS

KAMEHAMEHA HIGHWAY
INTERSECTION IMPROVEMENTS
AT KAHEKILI HIGHWAY
Federal-Aid Project No. NH-083-1(082)

Scale: Date: Sept. 2022

SHEET No. U-4 OF 8 SHEETS

ADD 80

ORIGINAL PLAN
SURVEY PLOTTED BY
DRAWN BY
TRACED BY
DESIGNED BY
QUANTITIES BY
CHECKED BY
DATE
NOTE BOOK
No.