FED. ROAD DIST. NO.	STATE	PROJ. NO.	FISCAL YEAR	SHEET NO.	TOTAL SHEETS
HAWAII	HAW.	NH-083-1(082)	2022	ADD 24	99

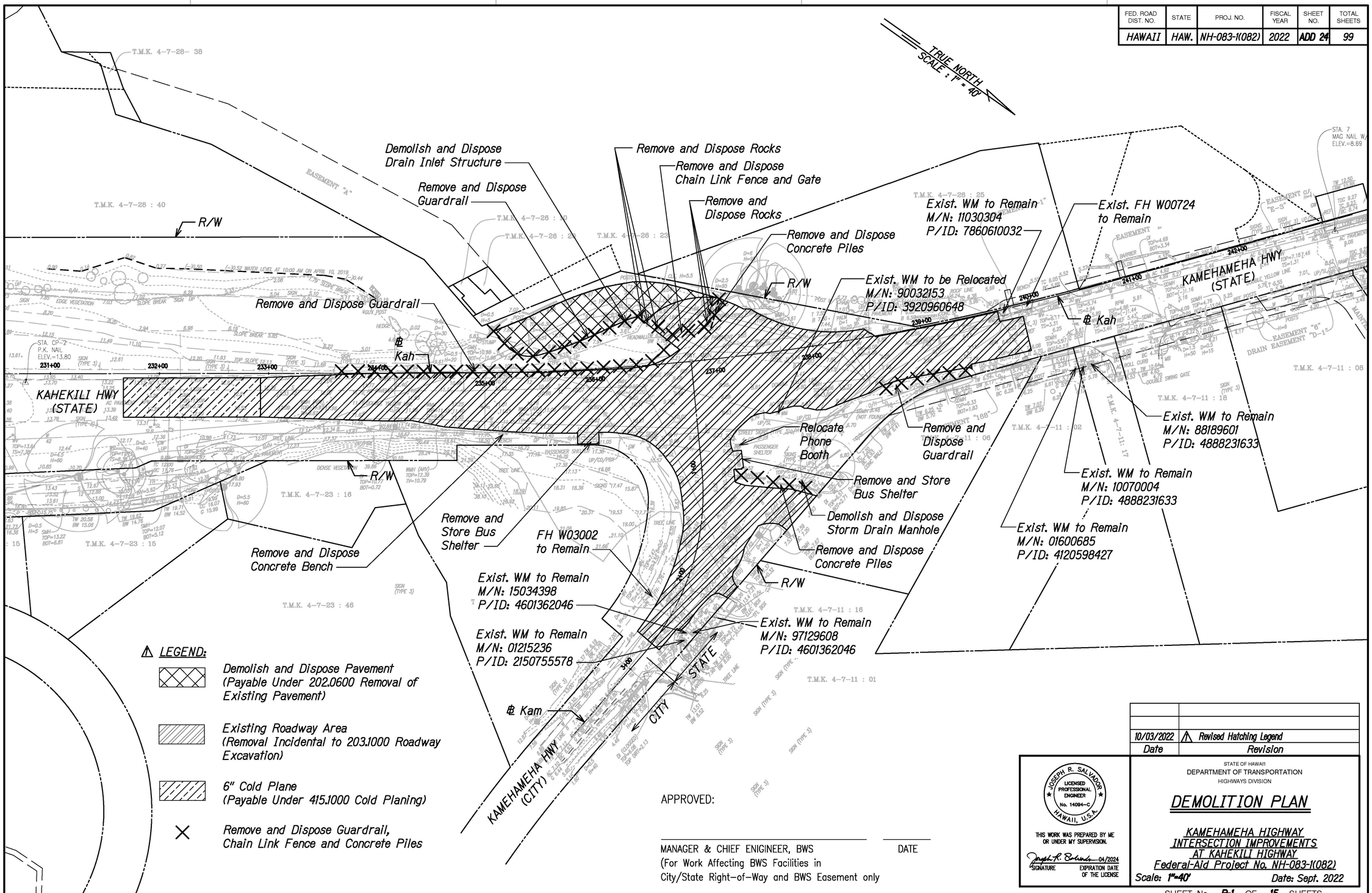

APPROVED:

MANAGER & CHIEF ENIGINEER, BWS
(For Work Affecting BWS Facilities in City/State Right-of-Way and BWS Easement only

DATE

Date	Revision
10/03/2022	Revised Hatching Legend

JOSEPH R. SALVADOR
LICENSED PROFESSIONAL ENGINEER
No. 14094-C
HAWAII, U.S.A.

THIS WORK WAS PREPARED BY ME OR UNDER MY SUPERVISION.

SIGNATURE — EXPIRATION DATE OF THE LICENSE 04/2024

STATE OF HAWAII
DEPARTMENT OF TRANSPORTATION
HIGHWAYS DIVISION

DEMOLITION PLAN

KAMEHAMEHA HIGHWAY
INTERSECTION IMPROVEMENTS
AT KAHEKILI HIGHWAY
Federal-Aid Project No. NH-083-1(082)

Scale: 1"=40' Date: Sept. 2022

SHEET No. R-1 OF 15 SHEETS

ORIGINAL PLAN
NOTE BOOK No.
SURVEY PLOTTED BY
DRAWN BY
TRACED BY
DESIGNED BY
QUANTITIES BY
CHECKED BY
DATE

ADD 24

FED. ROAD DIST. NO.	STATE	PROJ. NO.	FISCAL YEAR	SHEET NO.	TOTAL SHEETS
HAWAII	HAW.	NH-083-1(082)	2022	ADD. 25	99

ROADWAY CONSTRUCTION NOTES:

1. The Contractor shall notify the Engineer in writing, two (2) weeks prior to starting paving operations.
2. The Contractor shall remove and dispose of all existing raised pavement markers and traffic tapes prior to the overlaying of Asphalt Concrete. This work shall be considered incidental to the AC Pavement and will not be paid for separately.
3. All holes, depressions and wheel ruts shall be filled and compacted with HMA Pavement, Mix No. IV prior to resurfacing. This work shall be paid under Item No. 401.2000 - Leveling Course.
4. Smooth riding connections shall be constructed at all limits of pavement reconstruction, including the beginning and end of project, connecting approaches, and driveways as shown on the plans and/or as ordered by the Engineer. See Detail on Sht. R-4.
5. All saw cutting asphalt concrete pavement including the handling and disposal of the slurry (cooling water and asphalt pavement sawdust) from the saw cutting shall be considered incidental to Item No. 401.1000 HMA Pavement, Mix No. IV, and will not be paid for separately. Immediately vacuum cutting debris and water from surface as the sawing progresses. Slurry from saw cutting shall be handled and disposed of in accordance with the Water Pollution Control Note B - Waste Disposal on Sht. N-7.
6. The Contractor shall limit the extent of trench and excavation work for pavement reconstruction to an area that can be satisfactorily backfilled in one work day, and cold plane drop off is limited to 3". See Detail on Sht. R-5.
7. Prior to starting any excavation activities, the Contractor shall contact the Hawaii One Call Center at 1-866-423-7287.
8. In order to provide a smooth riding surface, the final lift of HMA Overlay shall be placed uniformly after the completion of the pavement reconstruction.

PAVEMENT LEGEND:

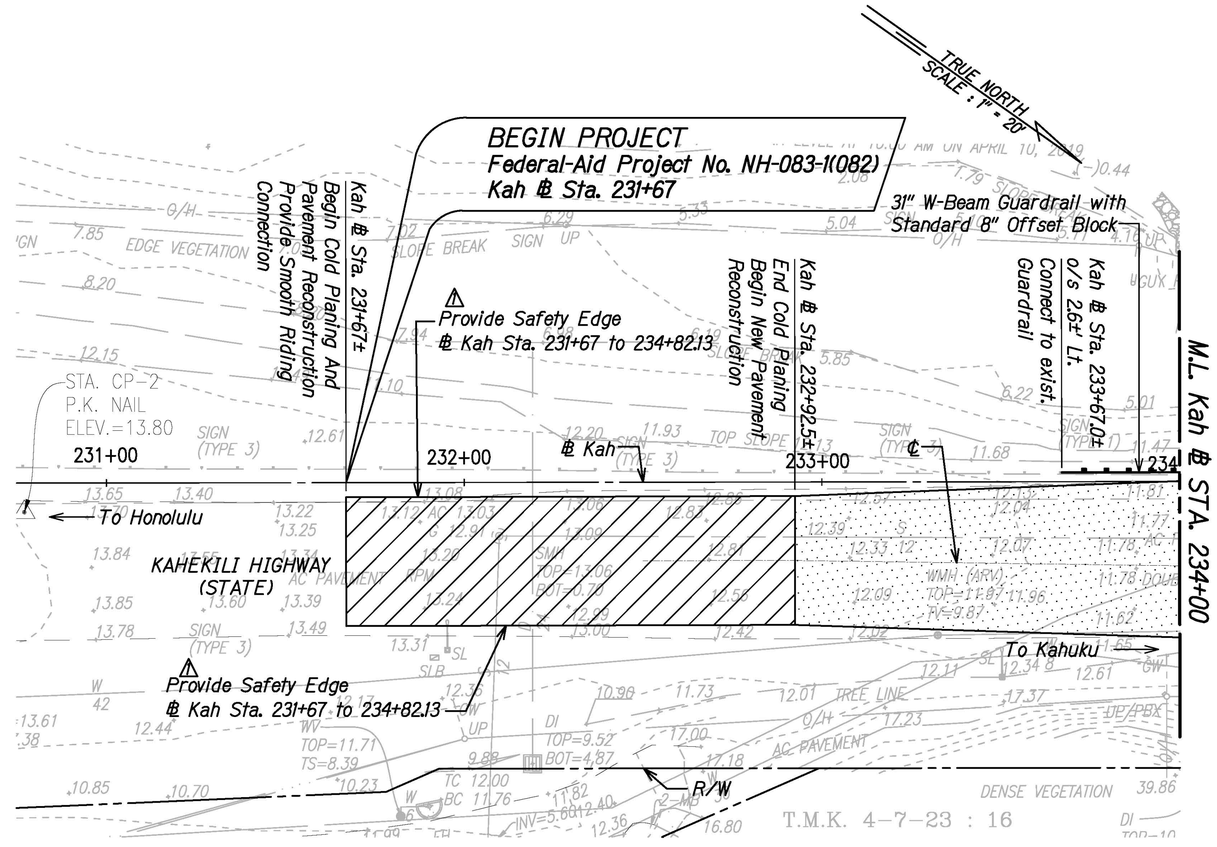

Limits of Cold Planing and Pavement Reconstruction:
- Cold Plane 6"
- 2" PMA Pavement Mix No. IV
- 4" PMA Base

Limits of New Pavement Reconstruction
- 3" PMA Pavement Mix No. IV, (PG 64E-22)
- 4" HMA Base (92 Max. Theoretical Specific Gravity)
- 21" Aggregate Base Course (95% Relative Compaction)
- Geogrid (Tensar TriAx-7 or equal)
- Filter Fabric (Mirafi 180N or equal)

PCCP Bus Bay Pad:
- 11" PCCP
- 21" Aggregate Base Course (95% Relative Compaction)
- Geogrid (Tensar TriAx-7 or equal)
- Filter Fabric (Mirafi 180N or equal)
- See PCC Bus Pad Details on Std. Plan D-15

PCCP Truck Apron:
- 11" PCCP
- 6" Non- Expansive Select Granular Fill

Date	Revision
10/03/22	⚠ Added Callouts

ORIGINAL PLAN | SURVEY PLOTTED BY | DRAWN BY | TRACED BY | DESIGNED BY | QUANTITIES BY | CHECKED BY | DATE | NOTE BOOK No.

JOSEPH R. SALVADOR LICENSED PROFESSIONAL ENGINEER No. 14094-C HAWAII, U.S.A.

THIS WORK WAS PREPARED BY ME OR UNDER MY SUPERVISION.

SIGNATURE — EXPIRATION DATE OF THE LICENSE 04/2024

STATE OF HAWAII
DEPARTMENT OF TRANSPORTATION
HIGHWAYS DIVISION

ROADWAY PLAN - 1

KAMEHAMEHA HIGHWAY
INTERSECTION IMPROVEMENTS
AT KAHEKILI HIGHWAY
Federal-Aid Project No. NH-083-1(082)

Scale: 1"=20' Date: Sept. 2022

SHEET No. R-2 OF 15 SHEETS

ADD. 25

FED. ROAD DIST. NO.	STATE	PROJ. NO.	FISCAL YEAR	SHEET NO.	TOTAL SHEETS
HAWAII	HAW.	NH-083-1(082)	2022	ADD. 26	99

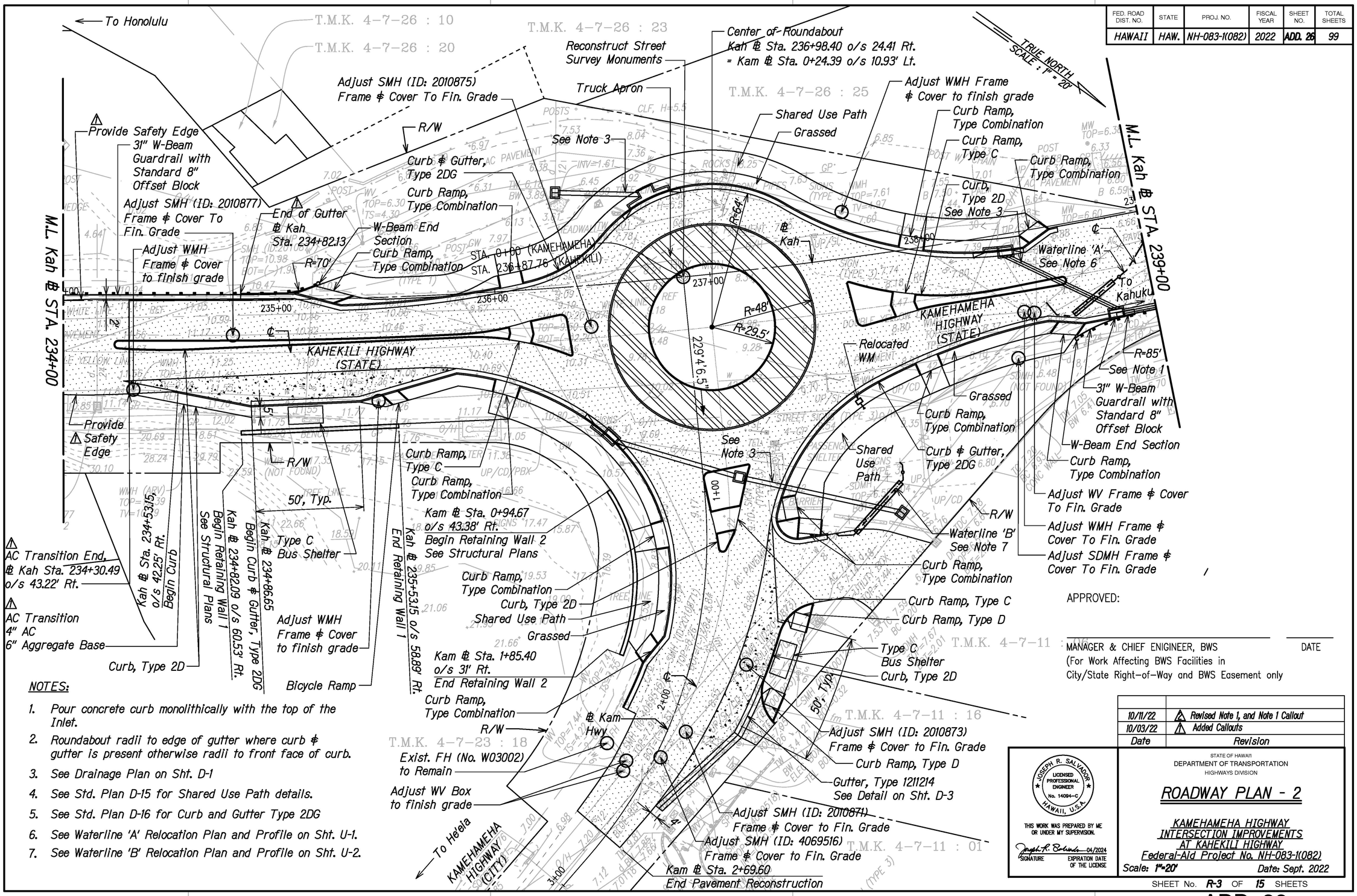

NOTES:

1. Pour concrete curb monolithically with the top of the Inlet.
2. Roundabout radii to edge of gutter where curb & gutter is present otherwise radii to front face of curb.
3. See Drainage Plan on Sht. D-1
4. See Std. Plan D-15 for Shared Use Path details.
5. See Std. Plan D-16 for Curb and Gutter Type 2DG
6. See Waterline 'A' Relocation Plan and Profile on Sht. U-1.
7. See Waterline 'B' Relocation Plan and Profile on Sht. U-2.

FED. ROAD DIST. NO.	STATE	PROJ. NO.	FISCAL YEAR	SHEET NO.	TOTAL SHEETS
HAWAII	HAW.	NH-083-1(082)	2022	27	99

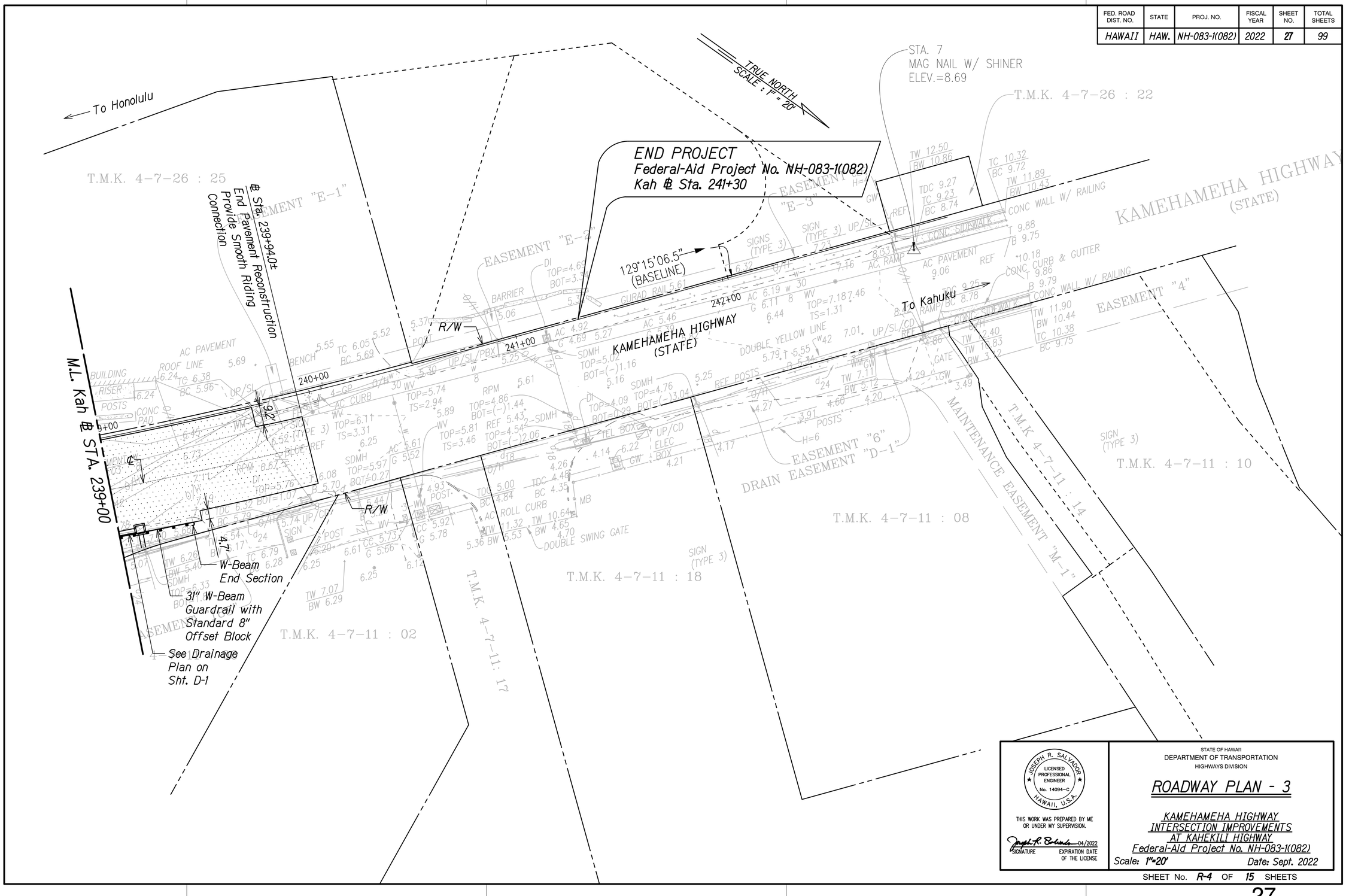

ORIGINAL PLAN	SURVEY PLOTTED BY	DATE
	DRAWN BY	
NOTE BOOK	TRACED BY	
	DESIGNED BY	
	QUANTITIES BY	
No.	CHECKED BY	

STATE OF HAWAII
DEPARTMENT OF TRANSPORTATION
HIGHWAYS DIVISION

JOSEPH R. SALVADOR
LICENSED PROFESSIONAL ENGINEER
No. 14094-C
HAWAII, U.S.A.

THIS WORK WAS PREPARED BY ME OR UNDER MY SUPERVISION.

SIGNATURE — EXPIRATION DATE OF THE LICENSE 04/2022

ROADWAY PLAN - 3

KAMEHAMEHA HIGHWAY
INTERSECTION IMPROVEMENTS
AT KAHEKILI HIGHWAY
Federal-Aid Project No. NH-083-1(082)

Scale: 1"=20' Date: Sept. 2022

SHEET No. R-4 OF 15 SHEETS

FED. ROAD DIST. NO.	STATE	PROJ. NO.	FISCAL YEAR	SHEET NO.	TOTAL SHEETS
HAWAII	HAW.	NH-083-1(082)	2022	ADD. 28	99

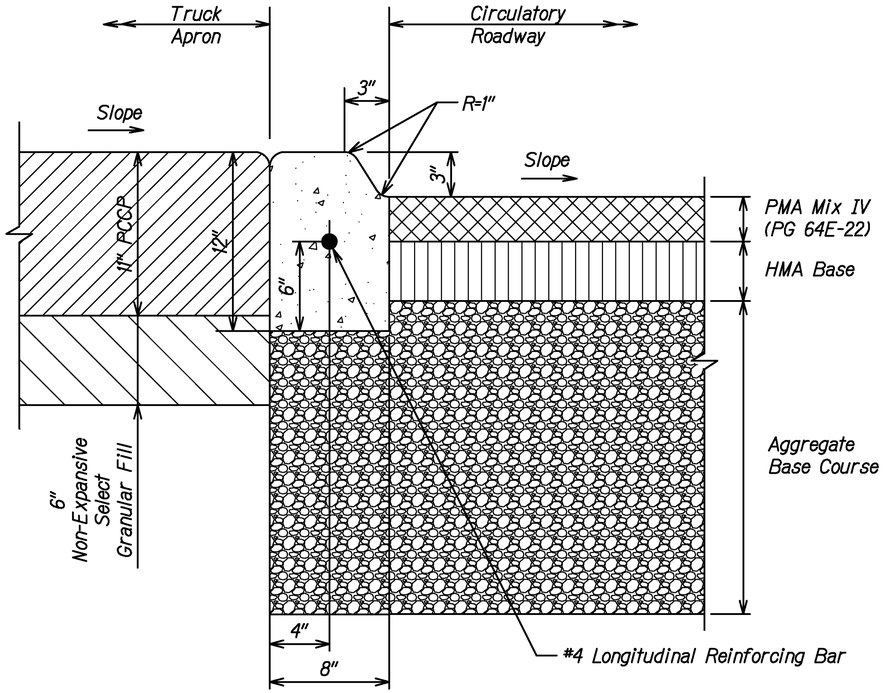

CURB, TYPE 2A MODIFIED

Not To Scale

NOTES:

The Contractor shall construct temporary pavement taper to prevent sharp pavement drop-offs at all cold planed sections as directed by the Engineer. Prior to final HMA Mix No. IV placement, temporary pavement taper shall be removed. These works shall be considered incidental to Item No. 401.1000 HMA Pavement, Mix No. IV.

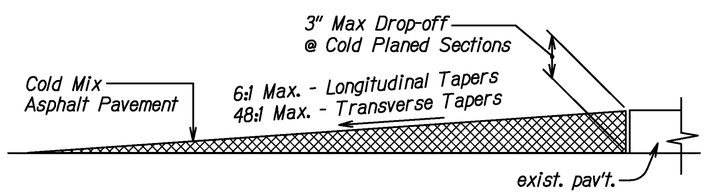

⚠ TEMPORARY TRANSITION AT COLD PLANED AREAS

Not To Scale

10/03/2022	⚠ Revised Detail
Date	Revision

ORIGINAL PLAN | SURVEY PLOTTED BY | DRAWN BY | TRACED BY | DESIGNED BY | QUANTITIES BY | CHECKED BY | DATE | NOTE BOOK No.

JOSEPH R. SALVADOR LICENSED PROFESSIONAL ENGINEER No. 14094-C HAWAII, U.S.A.

THIS WORK WAS PREPARED BY ME OR UNDER MY SUPERVISION.

SIGNATURE — EXPIRATION DATE OF THE LICENSE 04/2024

STATE OF HAWAII
DEPARTMENT OF TRANSPORTATION
HIGHWAYS DIVISION

ROADWAY DETAILS

KAMEHAMEHA HIGHWAY
INTERSECTION IMPROVEMENTS
AT KAHEKILI HIGHWAY
Federal-Aid Project No. NH-083-1(082)

Scale: Date: Sept. 2022

SHEET No. R-5 OF 15 SHEETS

FED. ROAD DIST. NO.	STATE	PROJ. NO.	FISCAL YEAR	SHEET NO.	TOTAL SHEETS
HAWAII	HAW.	NH-083-1(082)	2022	28	99

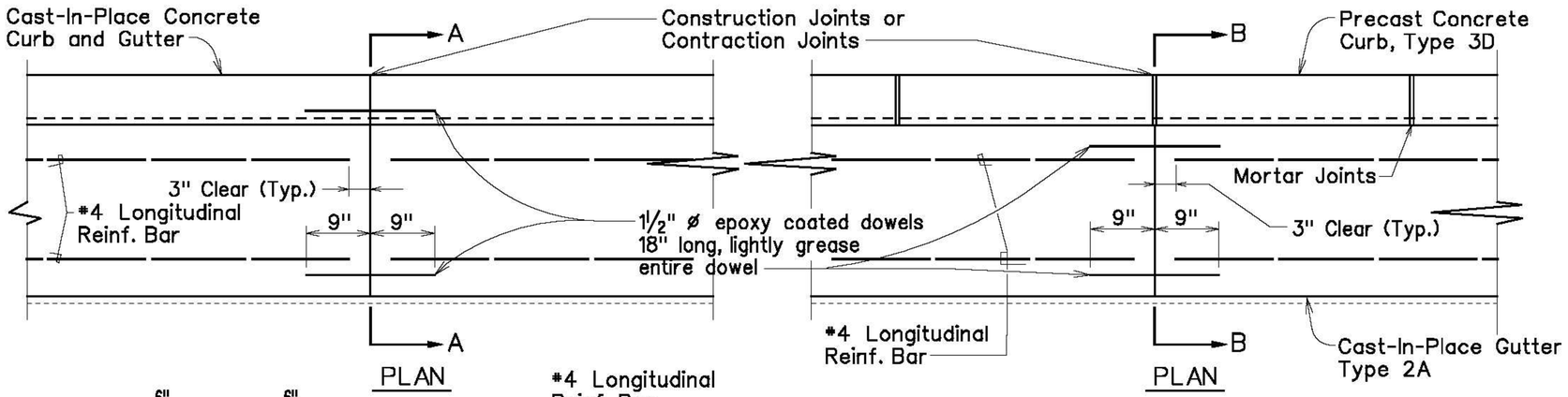

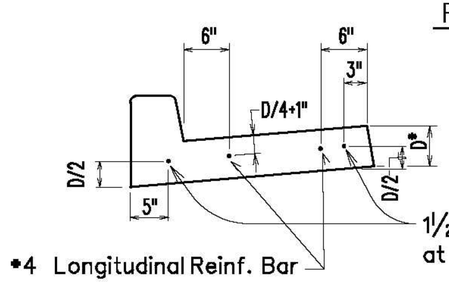

SECTION A-A

CAST-IN-PLACE CURB & GUTTER

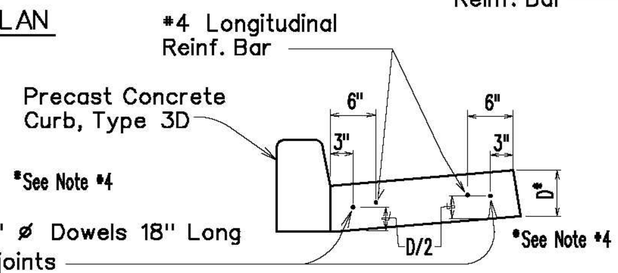

SECTION B-B

CAST-IN-PLACE GUTTER

CONSTRUCTION AND CONTRACTION JOINT DETAIL

Note:

1. Cast-In-Place P.C.C. Gutters shall be longitudinal broom finished.
2. Curb, Type 2A, Curb & Gutter, Type 2AG, are to be used only for constructing short segments of existing curbs and/or gutters of the same type.
3. The top of all types of concrete curbs, including driveway curbs shall be longitudinally broom finished.
4. For A.C. pavement areas, D equals to thickness of A.C.+A.C.Base but not less than 10". For P.C.C. pavement areas, D equals to thickness of P.C.C. pavement. (For P.C.C. pavement, see also D-22)
5. Concrete shall be Class A..
6. For curb returns use 1'-6" pre-cast concrete curbs.
7. Drawings are not to scale.
8. △1 Expansion joints shall be installed prior to concrete placement and at a maximum spacing of 50.0'.

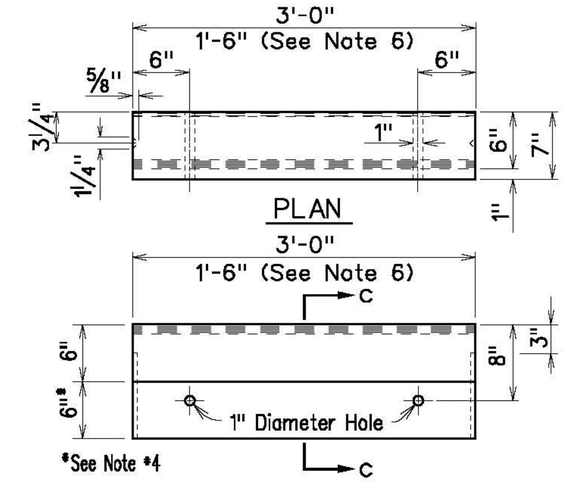

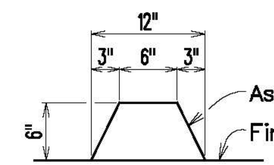

CURB, TYPE 6

BITUMINOUS CURB

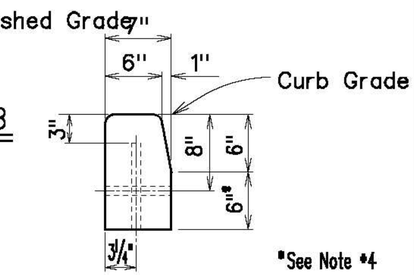

SECTION C-C

CURB, TYPE 3D

PRE-CAST CONC. CURB

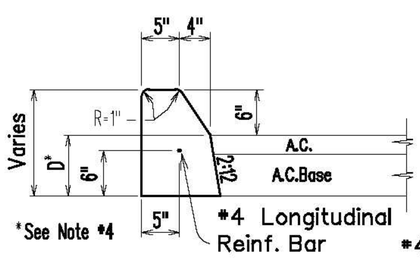

CURB, TYPE 2A

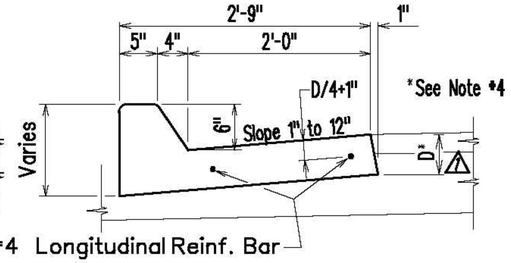

CURB & GUTTER, TYPE 2AG

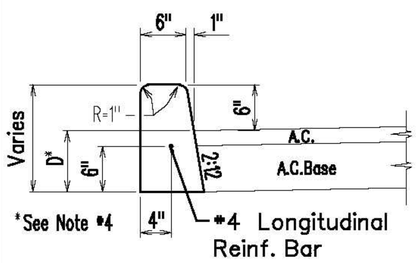

CURB, TYPE 2D

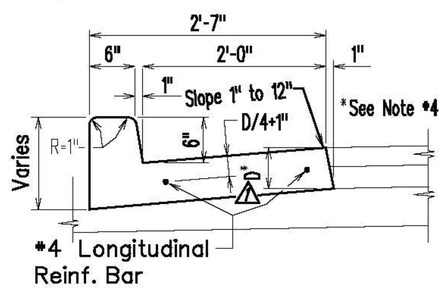

CURB & GUTTER, TYPE 2DG

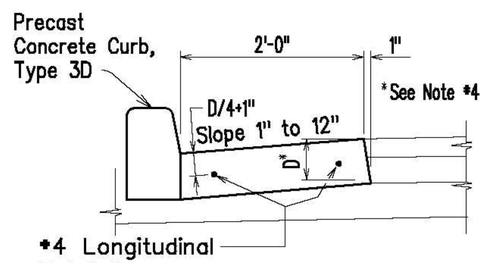

GUTTER, TYPE 2A

CAST-IN-PLACE CONCRETE CURBS AND/OR GUTTERS

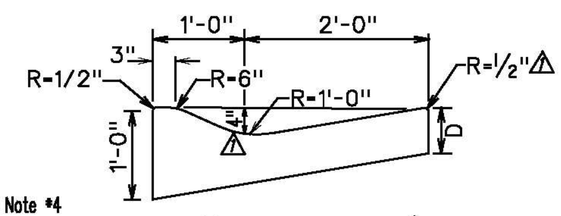

TYPE E CURB △1

△1 01/27/17	Add Note 8. Replace 6" Gutter Height with D. Added Type E Curb.	
DATE	REVISION	APP'D.

10/14/22	Added Sheet
Date	Revision

STATE OF HAWAII
DEPARTMENT OF TRANSPORTATION
HIGHWAYS DIVISION

STANDARD PLAN D-05
TYPICAL DETAILS
CURBS AND/OR GUTTERS

KAMEHAMEHA HIGHWAY INTERSECTION IMPROVEMENTS AT KAHEKILI HIGHWAY
Federal-Aid Project No. NH-083-1(082)

Scale: Not To Scale — Date: Oct. 2022

SHEET No. XX OF XX SHEETS

ORIGINAL PLAN	SURVEY PLOTTED BY	DATE
	DRAWN BY	
	TRACED BY	
	DESIGNED BY	
NOTE BOOK	QUANTITIES BY	
No.	CHECKED BY	

ADD 28S-1

FED. ROAD DIST. NO.	STATE	PROJ. NO.	FISCAL YEAR	SHEET NO.	TOTAL SHEETS
HAWAII	HAW.	NH-083-1(082)	2022	28	99

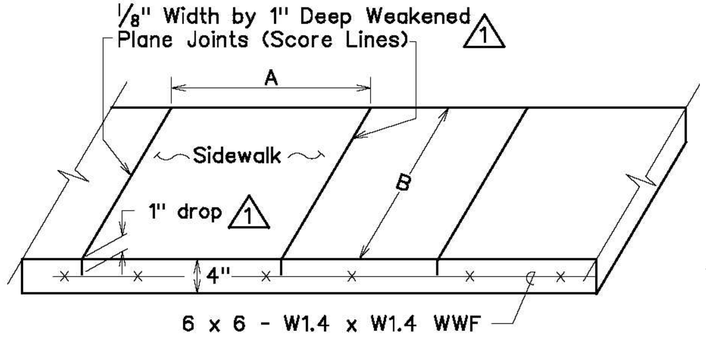

Notes:
1. Joint Dimensions: (B/A or A/B) < 1.25 and (A or B) not to exceed 7'-0"
2. Longitudinal Joints shall be similar to Transverse Joints.
3. Special Design to used where A or B> 7'-0"

SIDEWALK CONTRACTION JOINT DETAIL

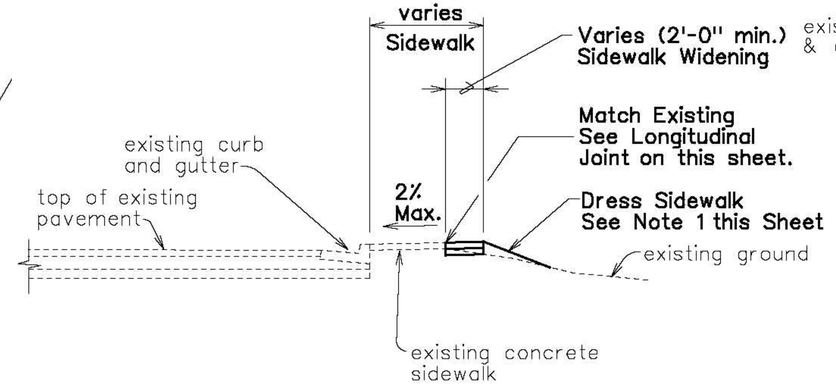

SIDEWALK WIDENING SECTION

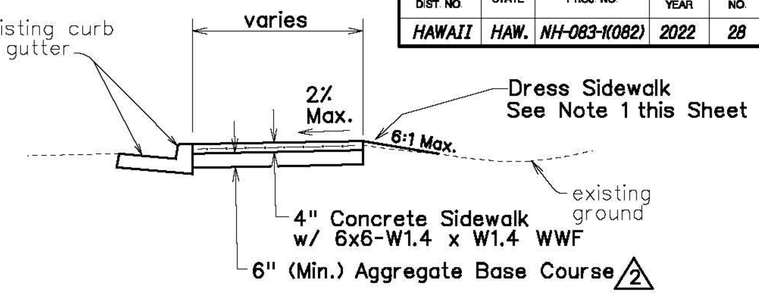

SIDEWALK DETAIL

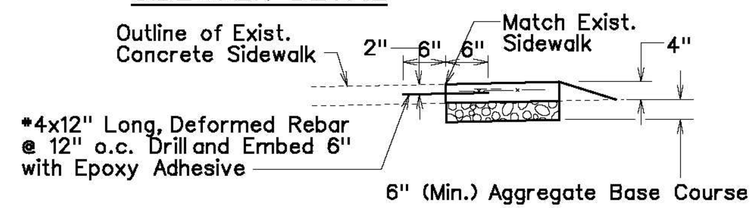

Note:
1. Do not install rebars within 6" of any planned transverse contraction or transverse construction joint.

LONGITUDINAL JOINT AT EXISTING SIDEWALK

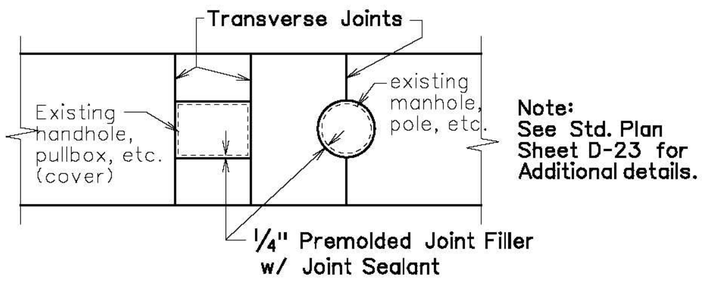

Note:
See Std. Plan Sheet D-23 for Additional details.

SIDEWALK ISOLATION JOINT DETAIL

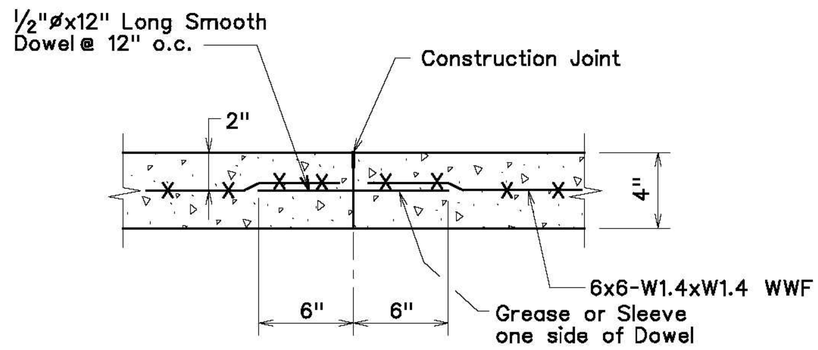

TRANSVERSE CONSTRUCTION JOINT DETAIL

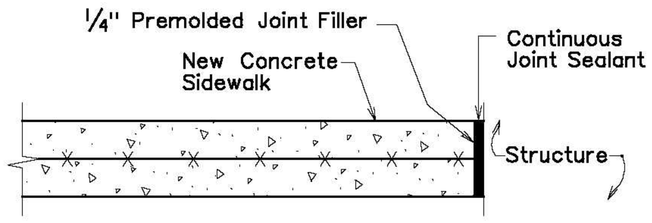

TRANSVERSE JOINT AT STRUCTURE DETAIL

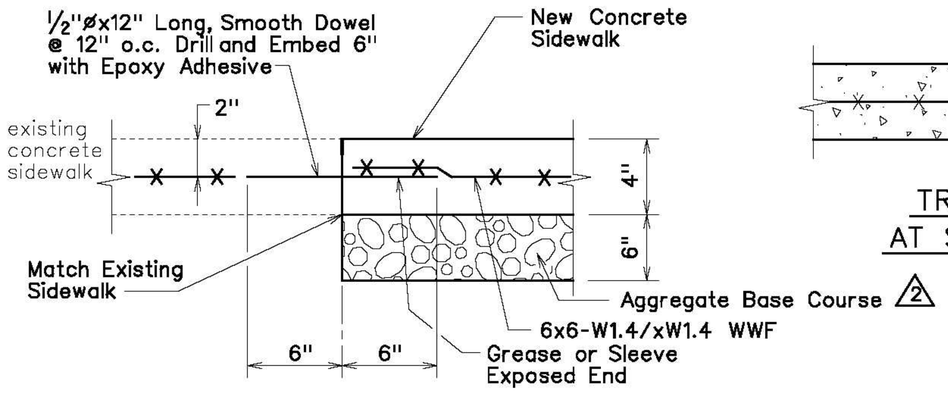

TRANSVERSE JOINT AT EXISTING SIDEWALK

NOTES:
1. Dressing of sidewalk shall consist of clearing, grubbing, grading, reshaping and compacting the area adjacent to the improvement with suitable material as shown on the plans and/or as directed by the Engineer. If existing ground is asphalt or concrete surface, dress sidewalk with A.C. pavement, Mix No. V. This work shall be considered incidental to the new sidewalk.
2. Transverse and longitudinal weakened plane joints for sidewalk shall be considered incidental to the new sidewalk.
3. Installation of dowels and tie bars, including drilling and epoxy grout, shall be incidental to Sidewalk.
4. Concrete shall be Class "A".
5. Only flat sheets of welded wire fabric reinforcement shall be used. No rolled welded wire fabric reinforcement will be allowed. (2)

1	11/01/21	Revised and edited Sidewalk Contraction joint detail callout and notes.
2	01/27/17	Replaced Bedcourse with Aggregate Base Course. Added Notes.
DATE	REVISION	APP'D.

10/14/22	Added Sheet
Date	Revision

STATE OF HAWAII
DEPARTMENT OF TRANSPORTATION
HIGHWAYS DIVISION

STANDARD PLAN D-15
CONCRETE SIDEWALK

KAMEHAMEHA HIGHWAY INTERSECTION IMPROVEMENTS AT KAHEKILI HIGHWAY
Federal-Aid Project No. NH-083-1(082)

Scale: Not To Scale — Date: Oct. 2022

SHEET No. XX OF XX SHEETS

ORIGINAL PLAN — NOTE BOOK No. — SURVEY PLOTTED BY — DRAWN BY — TRACED BY — DESIGNED BY — QUANTITIES BY — CHECKED BY — DATE

ADD 28S-2

FED. ROAD DIST. NO.	STATE	PROJ. NO.	FISCAL YEAR	SHEET NO.	TOTAL SHEETS
HAWAII	HAW.	NH-083-1(082)	2022	28	99

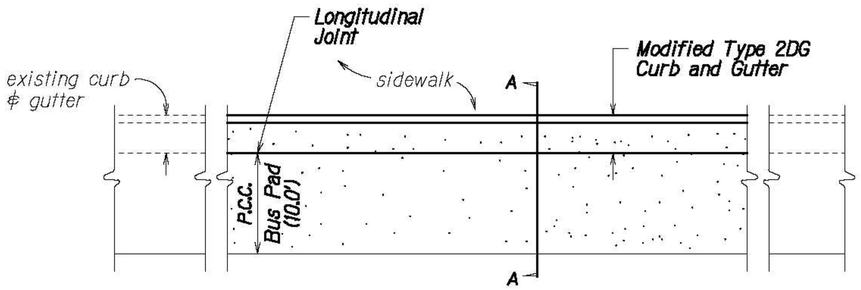

TYPICAL JOINT LOCATION AND LAYOUT PLAN FOR P.C.C. BUS PAD PAVEMENT

Not to Scale

Notes:

1. Provide continuously reinforced Bus Pad without transverse construction joints. Transverse construction joints with load transfer devices or dowels are required for P.C.C. Bus Pad Pavement greater than 70 feet in length. Provide 3" clearance between the rebar and the edge of pavement.
2. Provide a constant grade match roadway cross slope (2% min.) on the New P.C.C. Bus Pad Pavement and match existing A.C. Pavement to the New Bus Pad within the transition area.
3. Epoxy coated reinforcement shall conform to AASHTO M 284, (ASTM A775).
4. Concrete shall attain a minimum 14-day flexural strength, fr=650 psi.
5. Roadway excavation pavement required for the installation of P.C.C. Bus Pad Pavement and disposal of excavated materials shall be considered incidental to P.C.C. Bus Pad and will not be paid for separately.
6. P.C.C. Bus Pad can be poured monolithically together with the Curb and Gutter and the rebar pattern can continue from the bus pad into the Curb and Gutter (Same rebar arrangement) provided the plan details and slopes are met.
7. Removal and Demolishing of existing Type 2DG Curb and Gutter shall be considered incidental to New Modified Type 2DG Curb and Gutter.
8. Forms shall be used for the concrete bus pad, and the A.C. should not be used as a form. Following the setting of the concrete, the forms should be removed and filled with properly compacted HMA Pavement Mix No. IV.

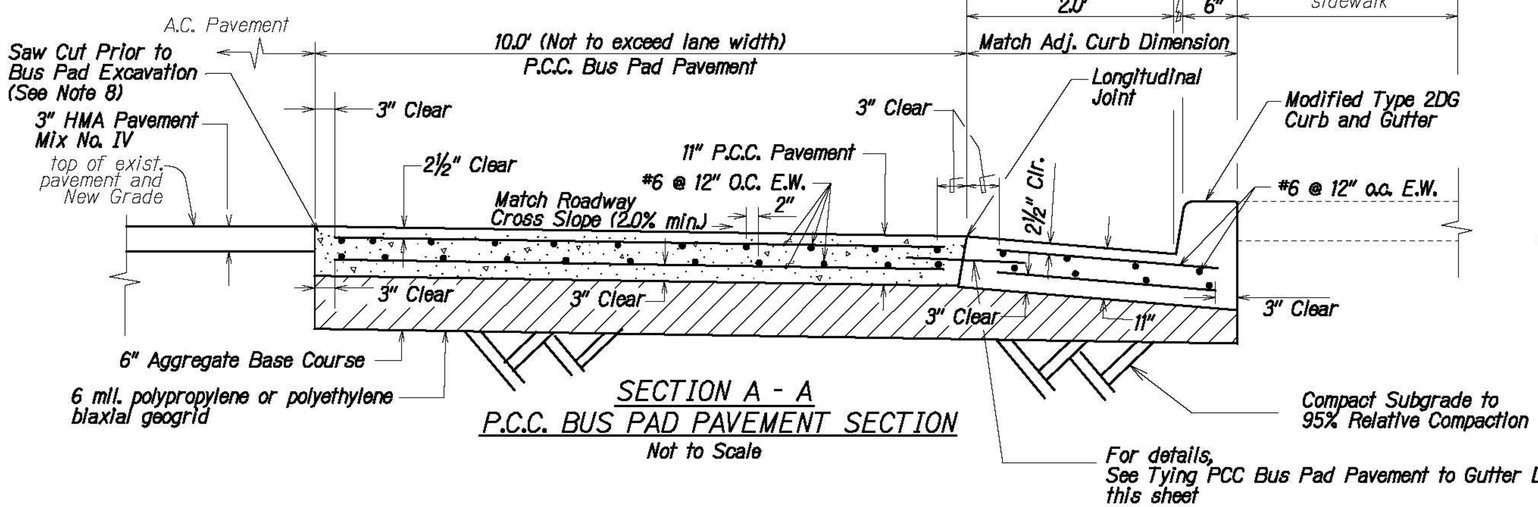

SECTION A - A
P.C.C. BUS PAD PAVEMENT SECTION

Not to Scale

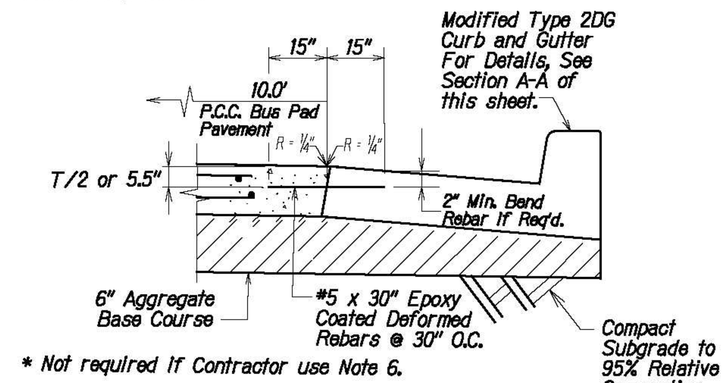

* Not required if Contractor use Note 6.

TYING P.C.C. BUS PAD PAVEMENT TO GUTTER DETAIL

Not to Scale

1	01/27/17	Superceed Standard Plan D-16 dated 05/31/07
DATE	REVISION	APP'D.

10/14/22	Added Sheet
Date	Revision

STATE OF HAWAII
DEPARTMENT OF TRANSPORTATION
HIGHWAYS DIVISION

STANDARD PLAN D-16
P.C.C. BUS PAD

KAMEHAMEHA HIGHWAY INTERSECTION IMPROVEMENTS AT KAHEKILI HIGHWAY
Federal-Aid Project No. NH-083-1(082)

Scale: Not To Scale — Date: Oct. 2022

SHEET No. XX OF XX SHEETS

ADD 28S-3

ORIGINAL PLAN		
NOTE BOOK	No.	

		DATE
SURVEY PLOTTED BY		
DRAWN BY		
TRACED BY		
DESIGNED BY		
QUANTITIES BY		
CHECKED BY		

FED. ROAD DIST. NO.	STATE	PROJ. NO.	FISCAL YEAR	SHEET NO.	TOTAL SHEETS
HAWAII	HAW.	NH-083-1(082)	2022	28	99

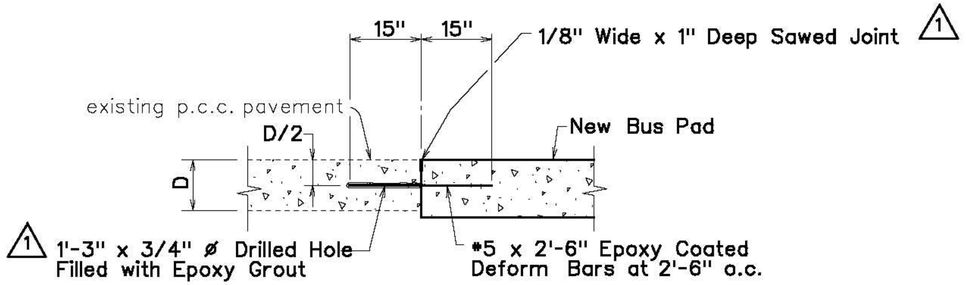

NOTE:

1. Epoxy Coated Deformed Bars shall Conform to AASHTO M284 (ASTM A 775).
2. Transverse Construction Joints shall be located at a Minimum Distance of 10 Feet from the Nearest Transverse Contraction Joint.

LONGITUDINAL CONSTRUCTION JOINT
AT EXISTING P.C.C. PAVEMENT

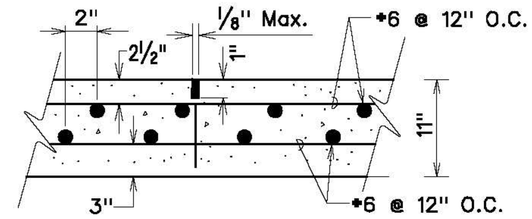

TRANSVERSE WEAKENED PLANE JOINT
FOR P.C.C. BUS PAD
(SAWED CONTRACTION)

1	01/27/17	Revised Width Thickness for Sawed Joint. Revised drilled hole diameter.
	DATE	REVISION	APP'D.

10/14/22	Added Sheet
Date	Revision

STATE OF HAWAII
DEPARTMENT OF TRANSPORTATION
HIGHWAYS DIVISION

STANDARD PLAN D-17
P.C.C. BUS PAD

KAMEHAMEHA HIGHWAY INTERSECTION
IMPROVEMENTS AT KAHEKILI HIGHWAY
Federal-Aid Project No. NH-083-1(082)

Scale: Not To Scale Date: Oct. 2022

SHEET No. XX OF XX SHEETS

ADD 28S-4

ORIGINAL PLAN
NOTE BOOK No.
SURVEY PLOTTED BY
DRAWN BY
TRACED BY
DESIGNED BY
QUANTITIES BY
CHECKED BY
DATE

FED. ROAD DIST. NO.	STATE	PROJ. NO.	FISCAL YEAR	SHEET NO.	TOTAL SHEETS
HAWAII	HAW.	NH-083-1(082)	2022	28	99

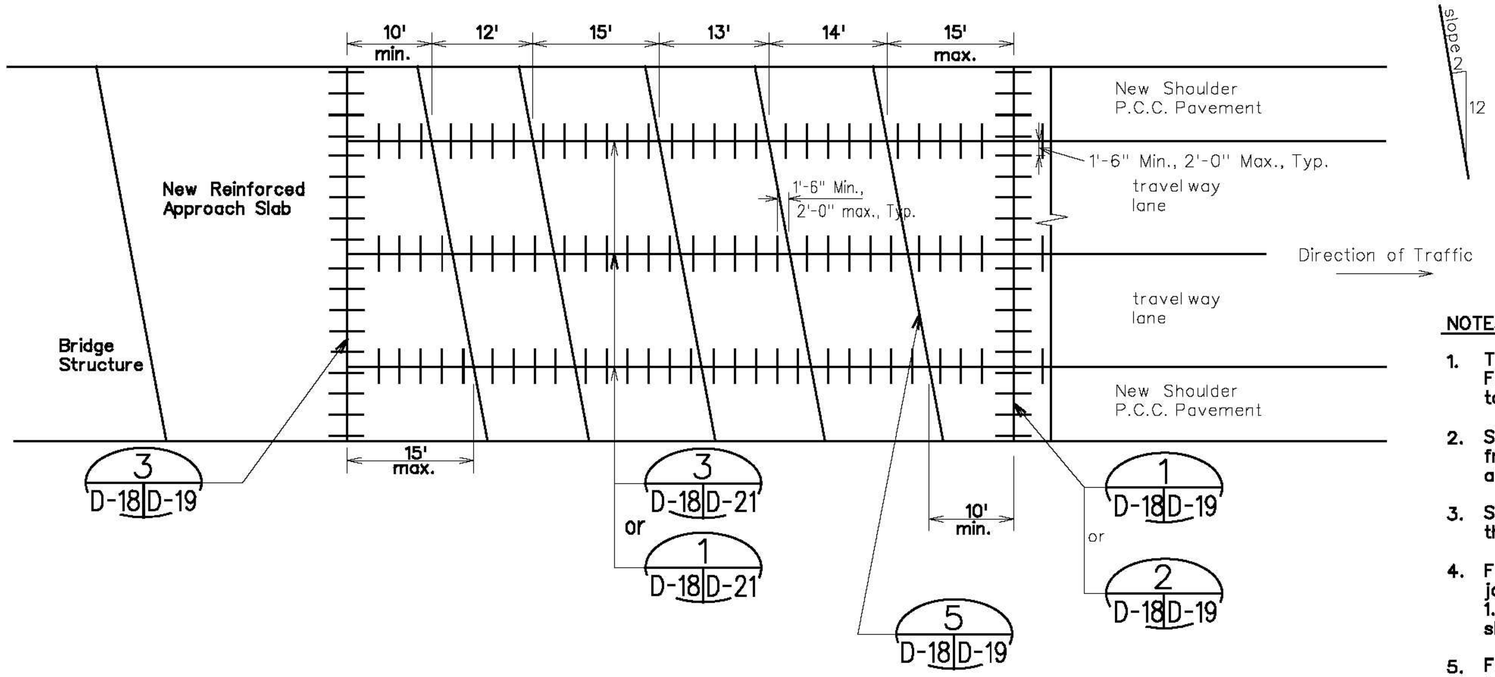

TYPICAL JOINT LAYOUT PLAN WITH SKEWED JOINTS

Not ot Scale

NOTES:

1. The dimensions shown are for a 12 foot wide travel way lane width. For other lane widths adjust the transverse joint spacing to obtain a length to width ratio of not greater than 1.25 for the travel way lane slabs.
2. Skew the typical transverse joint with a 2 foot offset counter clockwise from a perpendicular to the edge of pavement for every 12 feet along that perpendicular.
3. Space transverse joint at successive intervals at 12', 15', 13', and 14' in the direction of travel. Repeat for the remaining joints.
4. For travel way lanes, reinforce odd shaped slabs and slabs with mismatched joints. Odd shaped slabs are slabs with length to width ratios greater than 1.25, and other nonsquare shaped slabs. See sheet D-20. Triangular shaped slabs are considered odd-shaped slabs.
5. For the shoulder, reinforcing is not required for slabs that exceed the length to width ratio of 1.25. Triangular shaped slabs shall have reinforcing.
6. Locate transverse construction joints at a minimum distance of ten (10) feet and a maximum of fifteen (15) feet from the nearest planned contraction joint.
7. Provide shop drawings for joint layout where obstructions such as manholes are encountered, and at intersections with other streets.
8. Portland cement concrete pavement shall attain a minimum 14-day flexural strength, fr = 650 psi.
9. (1) For four or more paving lanes (including shoulders) use smooth dowel bars instead of deformed bars at the longitudinal joints shown on the Project Plans.

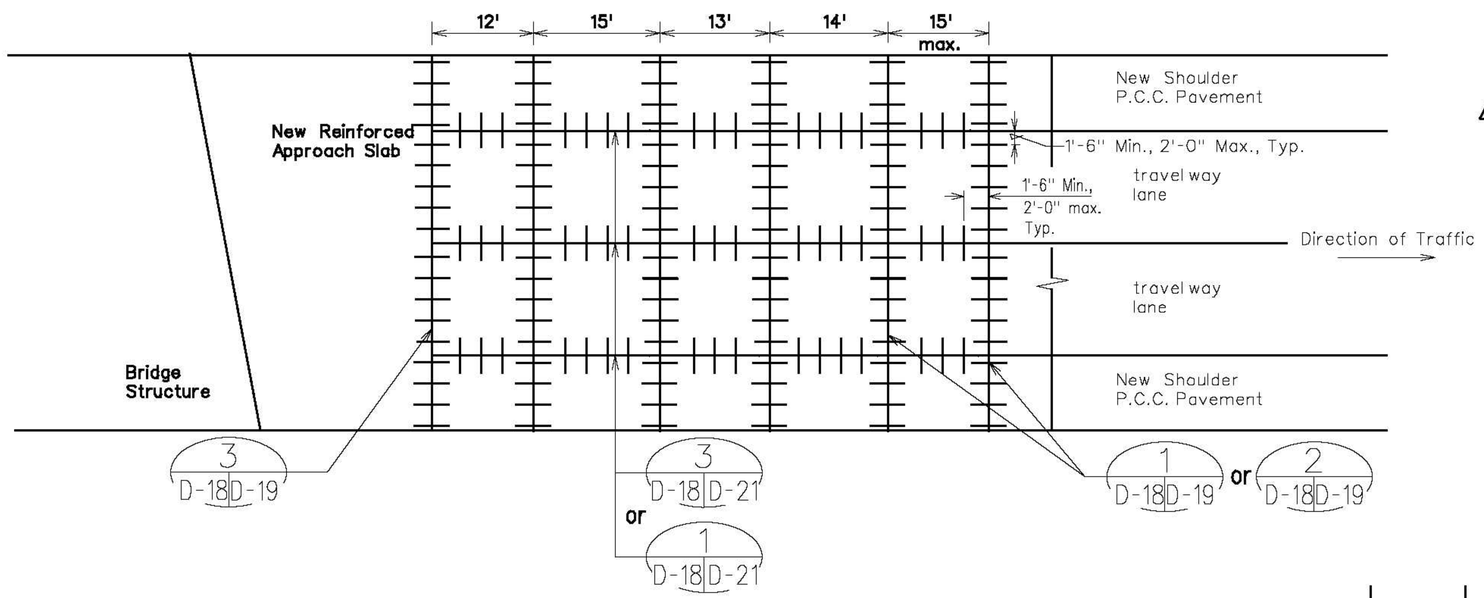

TYPICAL JOINT LAYOUT PLAN WITH PERPENDICULAR JOINTS

Not to Scale

1	01/27/17	Added note #9
	DATE	REVISION	APP'D.

10/14/22	Added Sheet
Date	Revision

STATE OF HAWAII
DEPARTMENT OF TRANSPORTATION
HIGHWAYS DIVISION

STANDARD PLAN D-18
P.C.C. PAVEMENT LAYOUT

KAMEHAMEHA HIGHWAY INTERSECTION IMPROVEMENTS AT KAHEKILI HIGHWAY
Federal-Aid Project No. NH-083-1(082)

Scale: Not To Scale — Date: Oct. 2022

SHEET No. XX OF XX SHEETS

ORIGINAL PLAN — SURVEY PLOTTED BY — DRAWN BY — TRACED BY — DESIGNED BY — QUANTITIES BY — CHECKED BY — DATE — NOTE BOOK No.

ADD 28S-5

FED. ROAD DIST. NO.	STATE	PROJ. NO.	FISCAL YEAR	SHEET NO.	TOTAL SHEETS
HAWAII	HAW.	NH-083-1(082)	2022	28	99

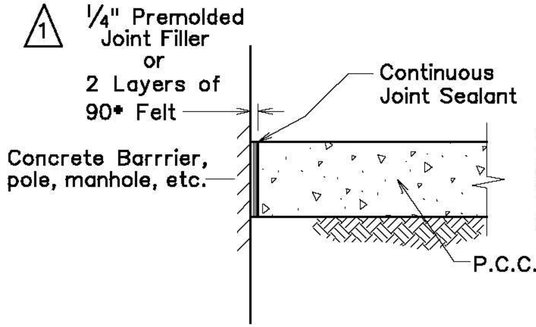

EXPANSION JOINT DETAIL

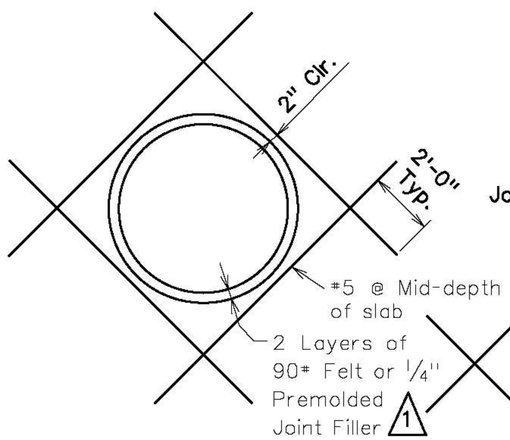

CIRCULAR OPENING DETAIL

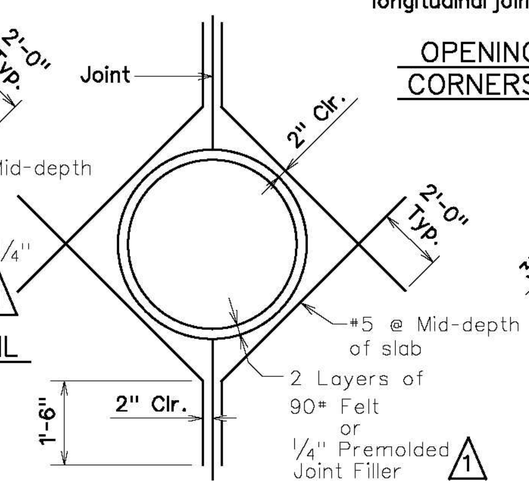

CIRCULAR OPENING AT JOINT DETAIL

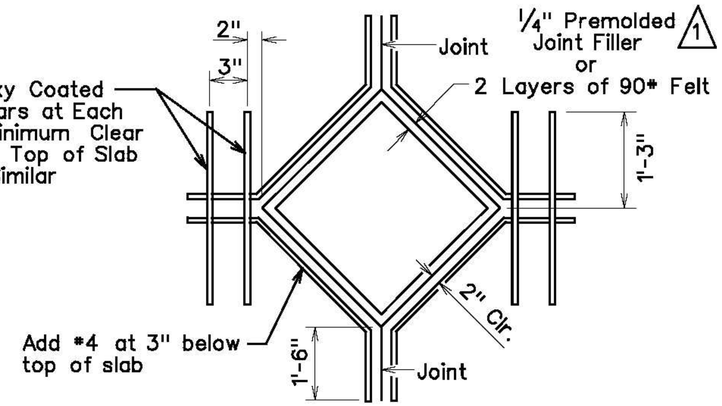

Avoid locating access openings along or near the longitudinal joints that separate two travelway lanes.

OPENINGS WITH CORNERS - CORNERS AT A JOINT DETAIL

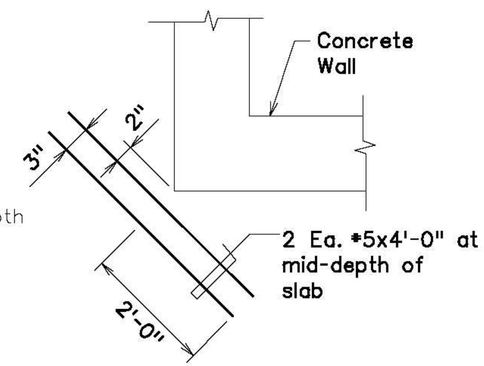

ADDED SLAB REINFORCEMENT AT WALLS

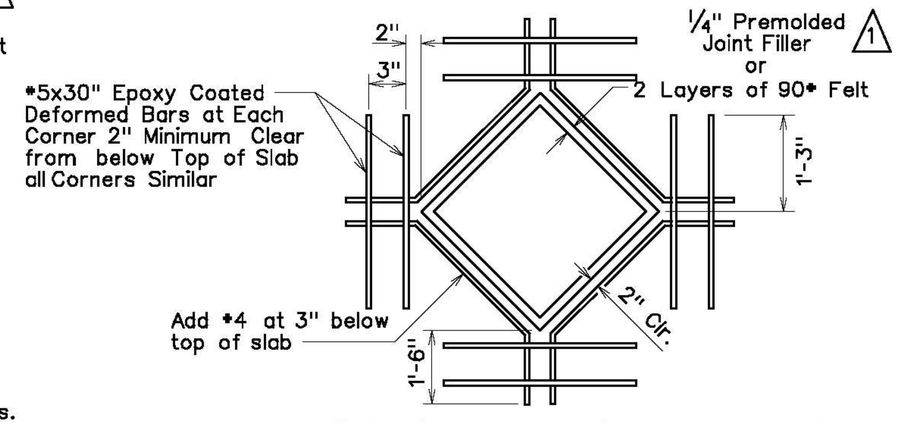

Avoid locating access openings along or near the longitudinal joints that separate two travelway lanes.

OPENINGS WITH CORNERS

NOTES:

1. Install isolation joints to allow the slab to move independently of objects that will not move evenly with the slab to minimize stress in the slab.
2. Minimize the amount of openings within the slab to minimize the areas from which cracking can occur. Listed below are considerations that can minimize cracking from openings in the slab.
   a. Install reinforcing bars at the corners as shown below.
   b. Use circular openings.
   c. Install the openings along a joint.
3. Locate openings in the slab that require access in a manner that minimizes the number of travelway lanes that need to be shut down when accessing the openings.
4. Locate openings along joints and configure to minimize the amount of corners within the slab.
5. Avoid locating access openings along or near the longitudinal joints that separate two travelway lanes.
6. See B-01 for additional notes.

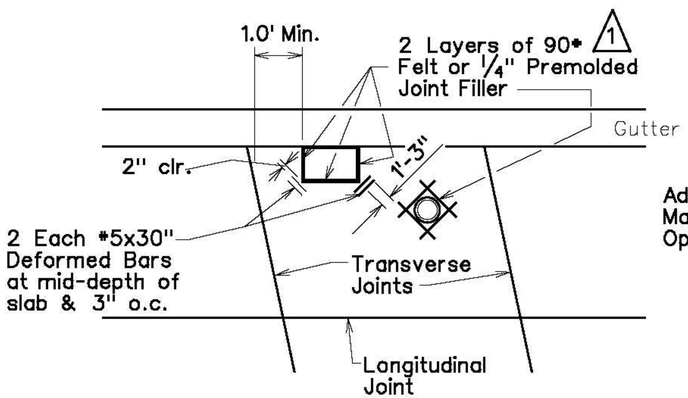

OPENINGS AWAY FROM JOINTS DETAIL

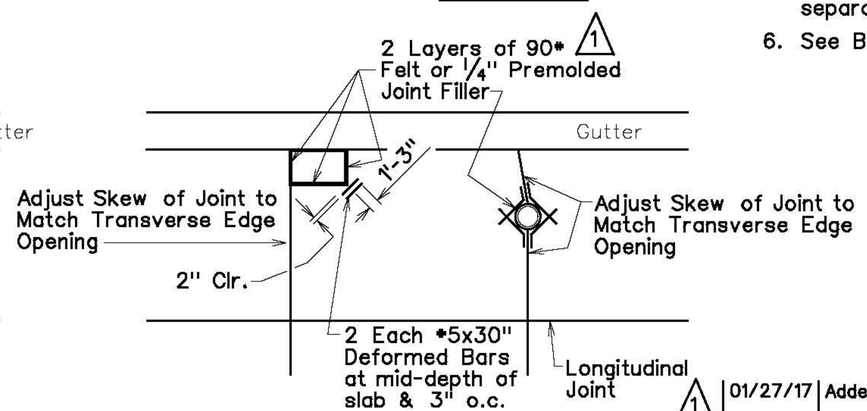

OPENINGS NEAR JOINTS DETAIL

01/27/17	Added callout	1
DATE	REVISION	APP'D.

10/14/22	Added Sheet
Date	Revision

STATE OF HAWAII
DEPARTMENT OF TRANSPORTATION
HIGHWAYS DIVISION

STANDARD PLAN D-23
JOINTS

KAMEHAMEHA HIGHWAY INTERSECTION IMPROVEMENTS AT KAHEKILI HIGHWAY
Federal-Aid Project No. NH-083-1(082)

Scale: Not To Scale — Date: Oct. 2022

SHEET No. XX OF XX SHEETS

ADD 28S-6

SURVEY PLOTTED BY	DATE
DRAWN BY	
TRACED BY	
DESIGNED BY	
QUANTITIES BY	
CHECKED BY	
ORIGINAL PLAN	NOTE BOOK No.

FED. ROAD DIST. NO.	STATE	PROJ. NO.	FISCAL YEAR	SHEET NO.	TOTAL SHEETS
HAWAII	HAW.	NH-083-1(082)	2022	29	99

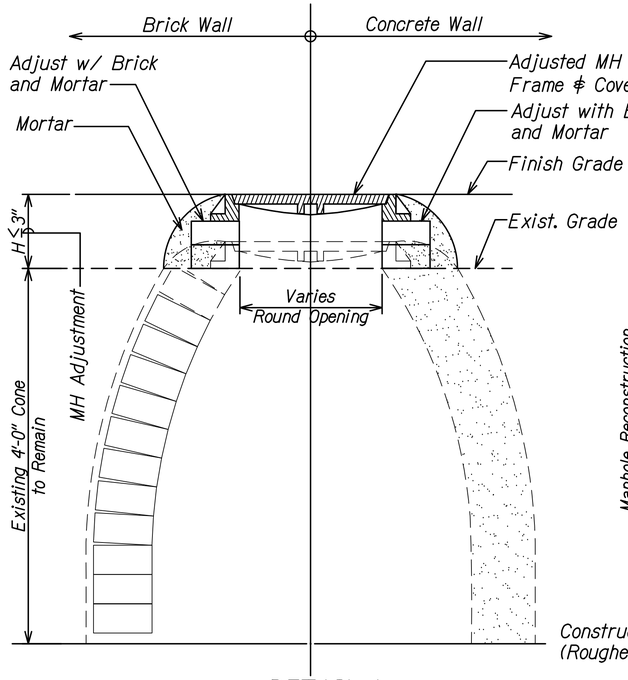

DETAIL A

ADJUSTMENT OF EXISTING MANHOLE COVER - CONICAL (H < 3")

Not to Scale

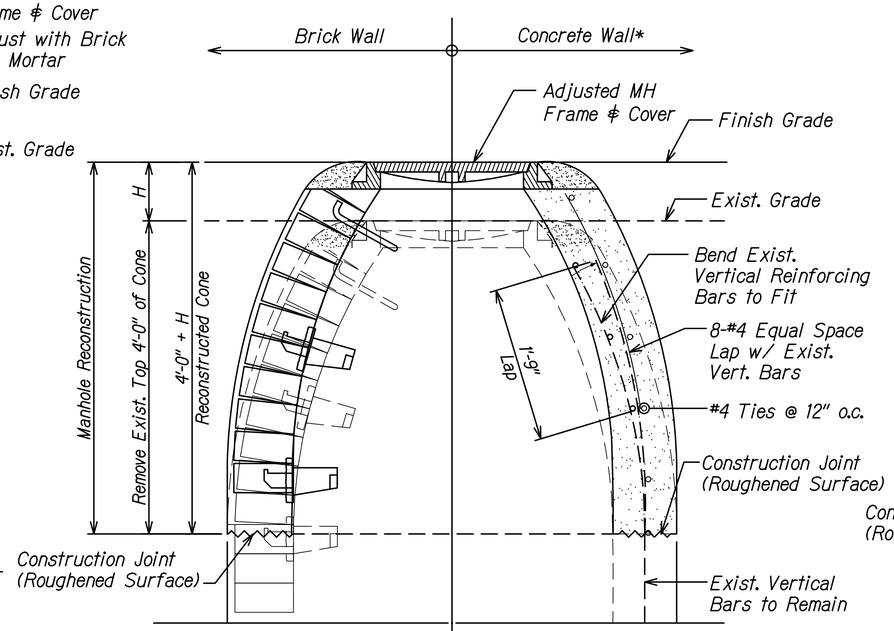

DETAIL B

Expose and Retain the Reinforcing Bars

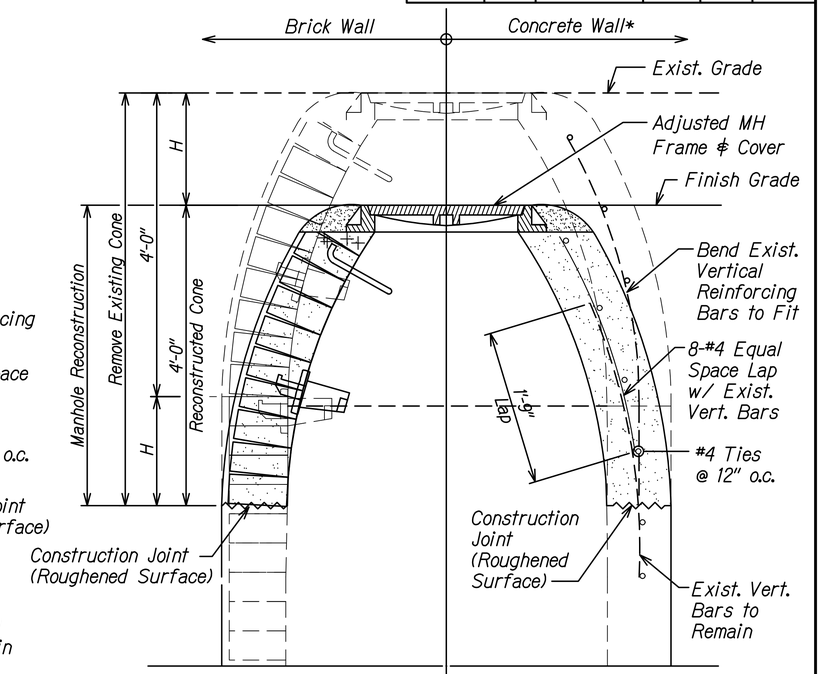

DETAIL C

Expose and Retain the Reinforcing Bars

RECONSTRUCTION OF EXISTING MANHOLE COVER - CONICAL (H > 3")

Not to Scale

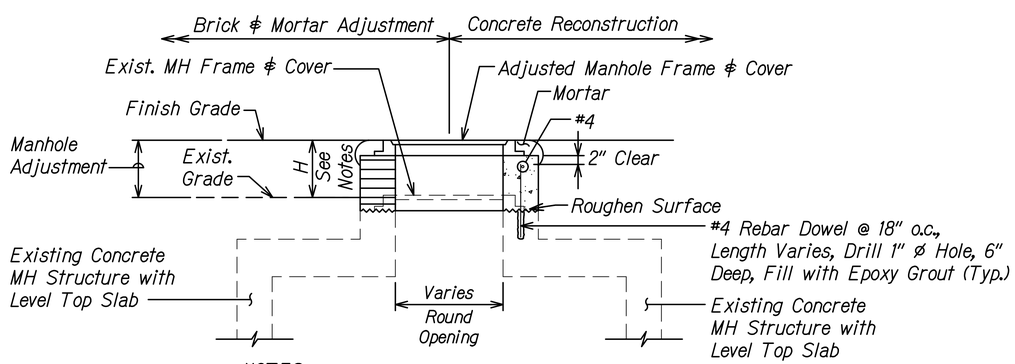

NOTES:

1. For 0" < H < 18", adjust with brick and mortar.
2. For 18" < H < 36", adjust with concrete.
3. Mortar and H > 18", remove existing bricks if exisitng MH is already adjusted with brick and adjust with concrete.

ADJUSTMENT/RECONSTRUCTION OF EXIST MANHOLE COVER - LEVEL TOP SLAB

Not to Scale

ORIGINAL PLAN	SURVEY PLOTTED BY	DATE
	DRAWN BY	
NOTE BOOK	TRACED BY	
	DESIGNED BY	
	QUANTITIES BY	
No.	CHECKED BY	

JOSEPH R. SALVADOR LICENSED PROFESSIONAL ENGINEER No. 14094-C HAWAII, U.S.A.

THIS WORK WAS PREPARED BY ME OR UNDER MY SUPERVISION.

SIGNATURE — EXPIRATION DATE OF THE LICENSE 04/2022

STATE OF HAWAII
DEPARTMENT OF TRANSPORTATION
HIGHWAYS DIVISION

MANHOLE ADJUSTMENT DETAILS

KAMEHAMEHA HIGHWAY
INTERSECTION IMPROVEMENTS
AT KAHEKILI HIGHWAY
Federal-Aid Project No. NH-083-1(082)

Scale: Date: Sept. 2022

SHEET No. R-6 OF 15 SHEETS

FED. ROAD DIST. NO.	STATE	PROJ. NO.	FISCAL YEAR	SHEET NO.	TOTAL SHEETS
HAWAII	HAW.	NH-083-1(082)	2022	30	99

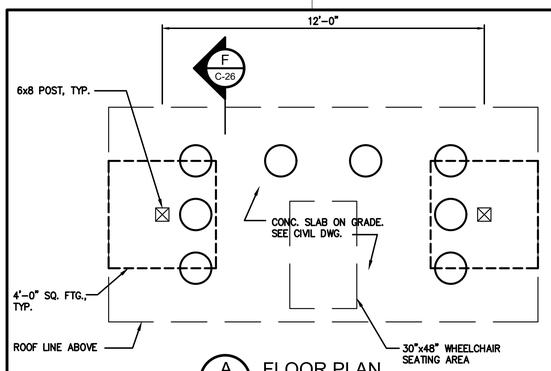

A C-26 FLOOR PLAN
SCALE: 3/8" = 1' - 0"

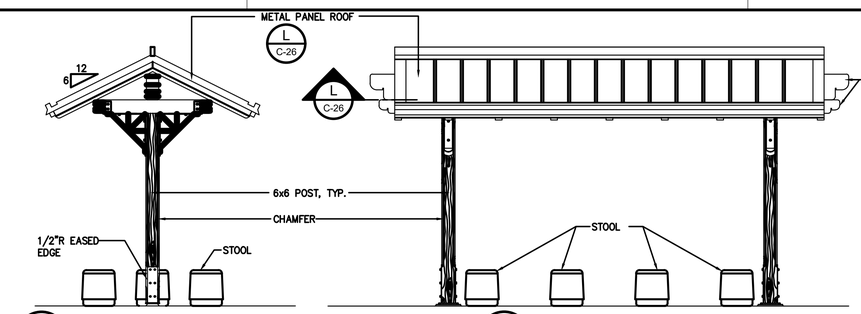

E C-26 LEFT/RIGHT ELEVATION
SCALE: 3/8" = 1' - 0"

F C-26 FRONT/REAR ELEVATION
SCALE: 3/8" = 1' - 0"

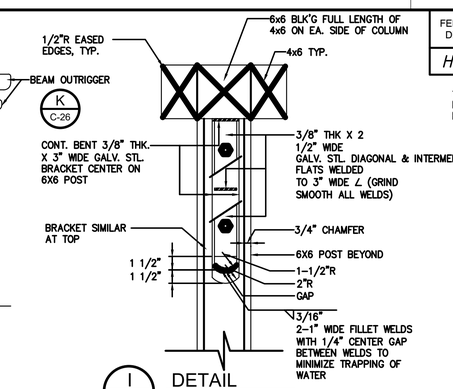

I C-26 DETAIL
SCALE: 1-1/2" = 1' - 0"

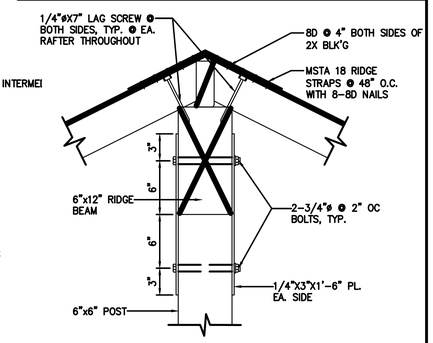

J C-26 RIDGE ANCHORING
SCALE: 1-1/2" = 1' - 0"

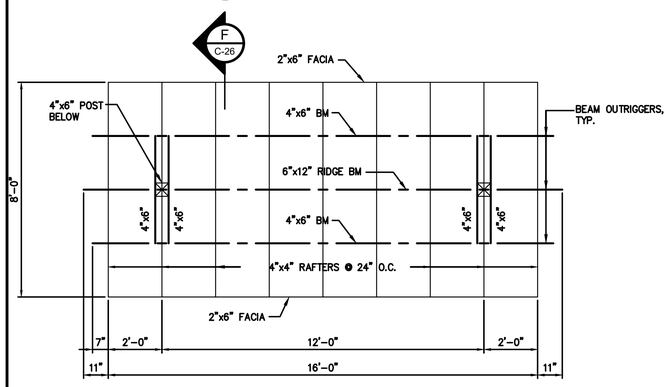

B C-26 ROOF FRAMING PLAN
SCALE: 3/8" = 1' - 0"

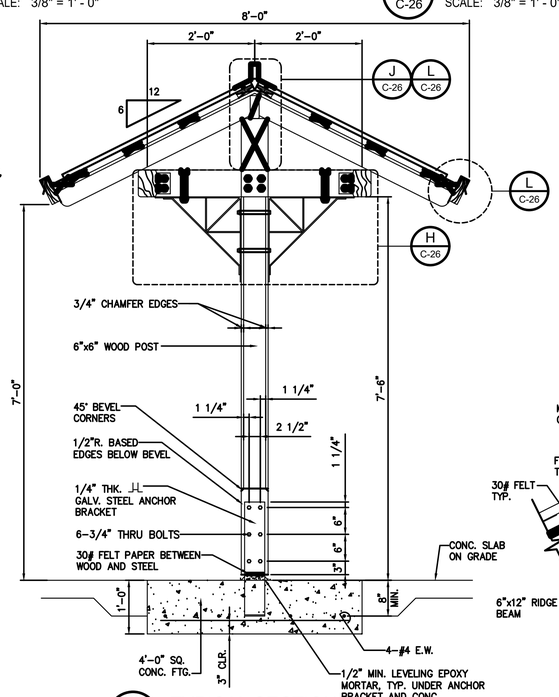

G C-26 TYPICAL SECTION
SCALE: 3/4" = 1' - 0"

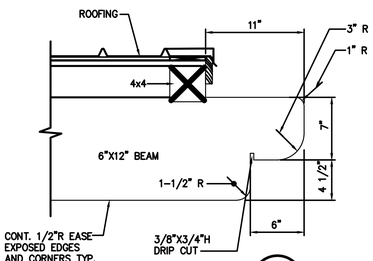

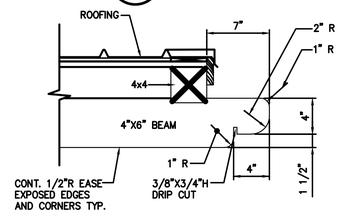

K C-26 BEAM OUTRIGGER DETAILS
SCALE: 1-1/2" = 1' - 0"

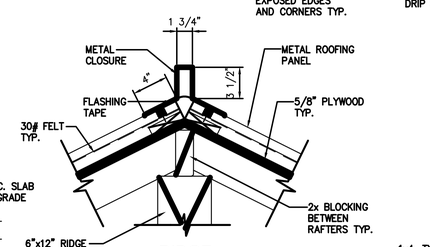

RIDGE

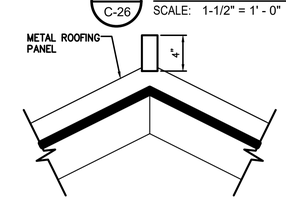

ELEVATION

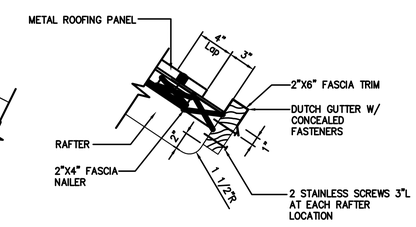

GUTTER FASCIA

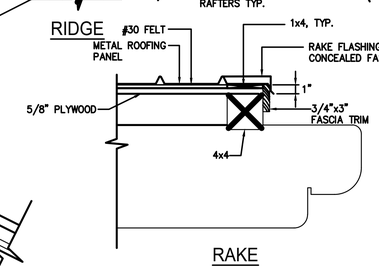

RAKE

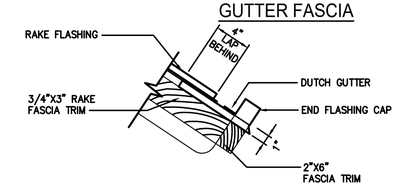

RAKE ELEVATION

L C-26 METAL PANEL ROOF DETAILS
SCALE: 1-1/2" = 1' - 0"

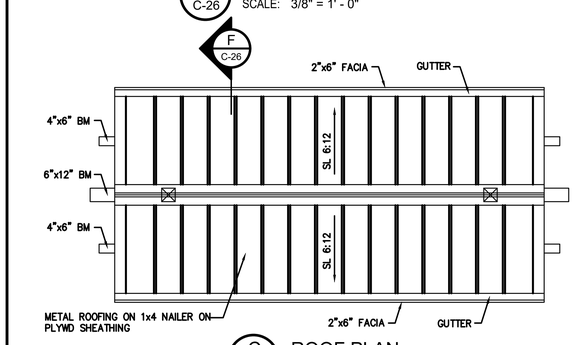

C C-26 ROOF PLAN
SCALE: 3/8" = 1' - 0"

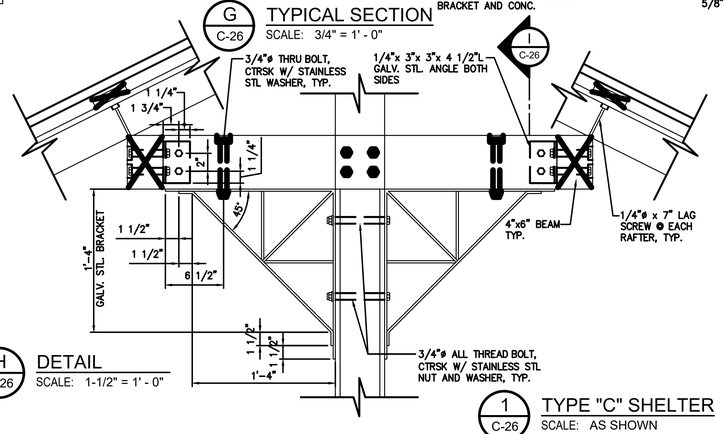

H C-26 DETAIL
SCALE: 1-1/2" = 1' - 0"

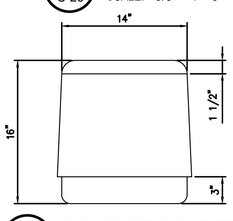

D C-26 CONC. STOOL DETAIL
SCALE: 1:10

1 C-26 TYPE "C" SHELTER
SCALE: AS SHOWN

1' 0 1' 2'
SCALE: 3/4"=1'-0"

1' 0 2' 4' 6'
SCALE: 3/8"=1'-0"

6" 0 6" 12" 18"
SCALE: 1-1/2"=1'-0"

ORIGINAL PLAN	SURVEY PLOTTED BY	DATE
	DRAWN BY	
NOTE BOOK	TRACED BY	
	DESIGNED BY	
	QUANTITIES BY	
No.	CHECKED BY	

JOSEPH R. SALVADOR
LICENSED PROFESSIONAL ENGINEER
No. 14094-C
HAWAII, U.S.A.

THIS WORK WAS PREPARED BY ME OR UNDER MY SUPERVISION.

SIGNATURE — EXPIRATION DATE OF THE LICENSE 04/2022

STATE OF HAWAII
DEPARTMENT OF TRANSPORTATION
HIGHWAYS DIVISION

TYPE "C" BUS SHELTER DETAILS

KAMEHAMEHA HIGHWAY
INTERSECTION IMPROVEMENTS
AT KAHEKILI HIGHWAY
Federal-Aid Project No. NH-083-1(082)

Scale: Date: Sept. 2022

SHEET No. R-7 OF 15 SHEETS

FED. ROAD DIST. NO.	STATE	PROJ. NO.	FISCAL YEAR	SHEET NO.	TOTAL SHEETS
HAWAII	HAW.	NH-083-1(082)	2022	31	99

GENERAL NOTES

1. All hardware, posts and fasteners shall be hot-dip zinc coated galvanized after fabrication. No punching, drilling or cutting will be permitted after galvanizing.
2. Where conditions require, special post lengths in increments of 6 inches may be specified by the Engineer.
3. All fasteners, posts, and rail elements (i.e. FBB03, PWE01, RWM04b, etc.) shall conform to the latest edition and amendments of "A Guide to Standardized Highway Barrier Rail Hardware", a report prepared and approved by the AASHTO-AGC-ARTBA Joint Cooperative Committee, Subcommittee On New Highway Materials, Task Force 13 Report. Dimensions of fastners, posts and rail elements have been converted from metric units into their present form.
4. The Blockout or Offset Block shall be approved by the State.
5. All new guardrail systems (system consists of total length of guardrail including both end treatments) shall include the Additional Paved Area.
6. After the guardrail posts are installed in the paved area, the Contractor shall fill/seal around each guardrail post and all cracks in the paved area caused during the guardrail post installation. If required by the inspector/engineer, the Contractor shall tamper the paved area around the guardrail post prior to filling/sealing. All costs associated with this work shall not be paid for separately, but shall be considered incidental to the various guardrail items.
7. When standards for the fill slope area cannot be met, a site specific, engineer approved design may be used.
8. Minimum working width (clear distance) between back of MGS post to any fixed object is 4'-1" (49").
9. New Hot Mix Asphalt (HMA) pavement at guardrails shall extend 6 feet longitudinally beyond terminal ends.
10. Reflector Markers (RM-5) mounted on guardrails shall be spaced every 25 feet. RM-5's shall not be installed on Terminal Sections. Furnishing and installing of each RM-5 shall be considered incidental to the guardrail system.

GUARDRAIL TYPE	DIMENSION	
	H	A
MGS w/ Standard 8" Offset Block	2'-1"	1'-6"
MGS w/ No Blockout	2'-7/8"	9 1/4"

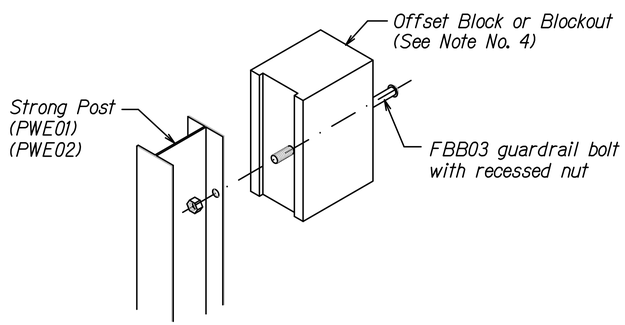

Exploded View
(Rail and washer not shown)

STEEL POST AND BLOCK DETAIL

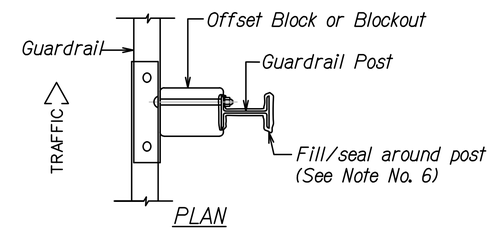

PLAN

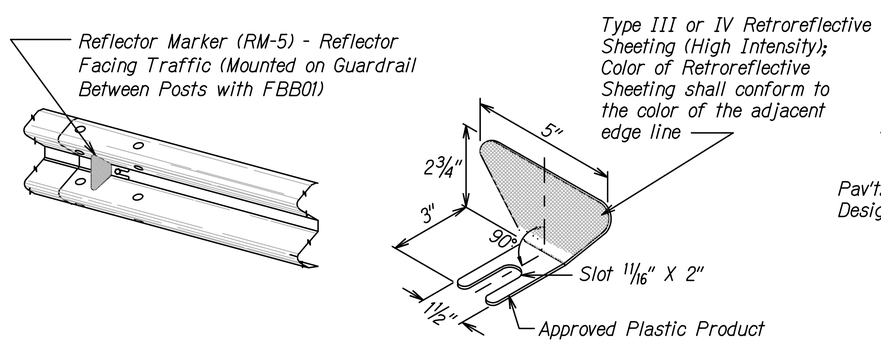

REFLECTOR MARKER (RM-5) DETAIL AND TYPICAL INSTALLATION

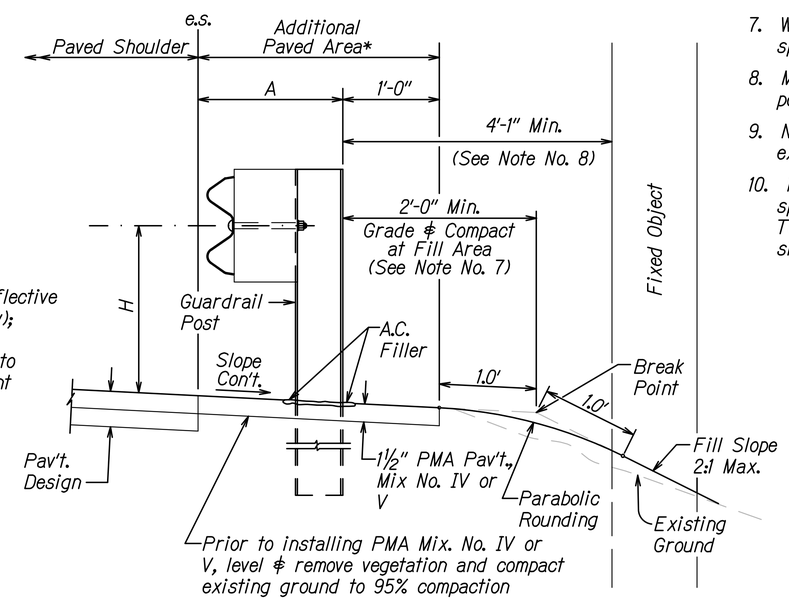

ELEVATION

TYPICAL GUARDRAIL INSTALLATION

ORIGINAL PLAN	SURVEY PLOTTED BY	DATE
	DRAWN BY	
NOTE BOOK	TRACED BY	
	DESIGNED BY	
	QUANTITIES BY	
No.	CHECKED BY	

JOSEPH R. SALVADOR
LICENSED PROFESSIONAL ENGINEER
No. 14094-C
HAWAII, U.S.A.

THIS WORK WAS PREPARED BY ME OR UNDER MY SUPERVISION.

SIGNATURE — EXPIRATION DATE OF THE LICENSE 04/2022

STATE OF HAWAII
DEPARTMENT OF TRANSPORTATION
HIGHWAYS DIVISION

GUARDRAIL DETAILS & NOTES

KAMEHAMEHA HIGHWAY
INTERSECTION IMPROVEMENTS
AT KAHEKILI HIGHWAY
Federal-Aid Project No. NH-083-1(082)

Scale: None — Date: Sept. 2022

SHEET No. R-8 OF 15 SHEETS

FED. ROAD DIST. NO.	STATE	PROJ. NO.	FISCAL YEAR	SHEET NO.	TOTAL SHEETS
HAWAII	HAW.	NH-083-1(082)	2022	32	99

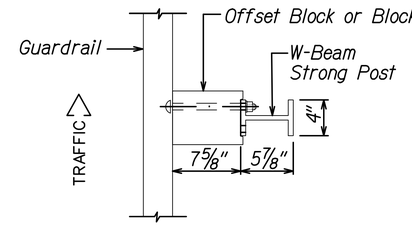

PLAN

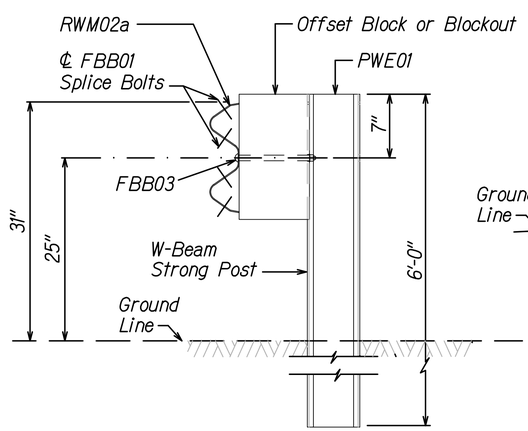

SECTION A-A

NOTE:
All Holes are 3/4" Dia.

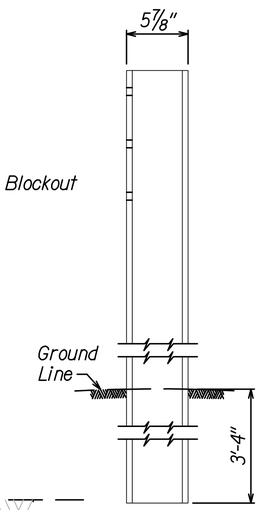

SIDE

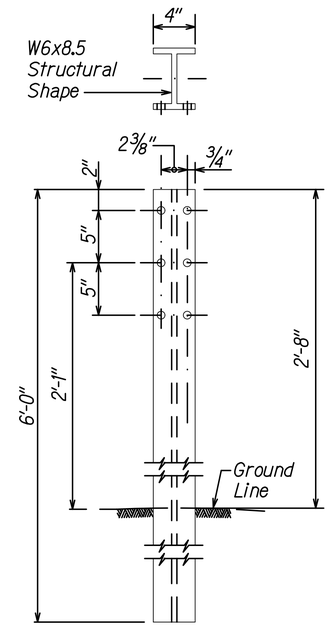

FRONT

W-BEAM STRONG POST
(PWE01)

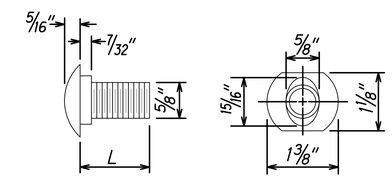

DESIGNATOR	L
FBB01	1 3/8"
FBB02	2"
FBB03	10"

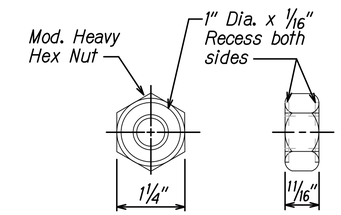

GUARDRAIL BOLTS AND RECESSED NUT

DESIGNATOR	BASE METAL THICKNESS
RWM04a	12 Gauge

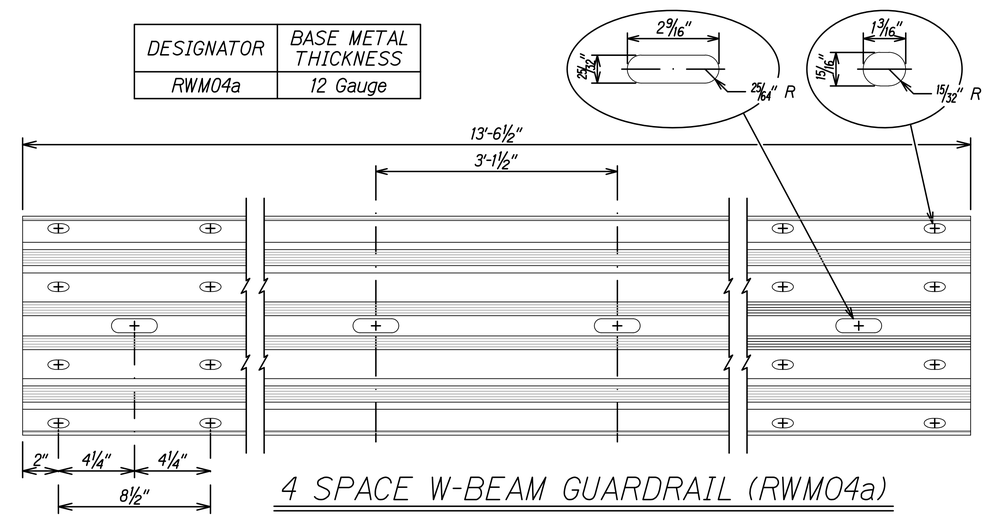

4 SPACE W-BEAM GUARDRAIL (RWM04a)

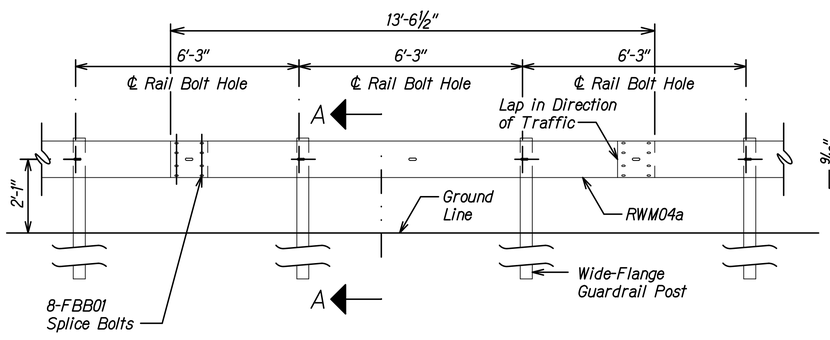

ELEVATION

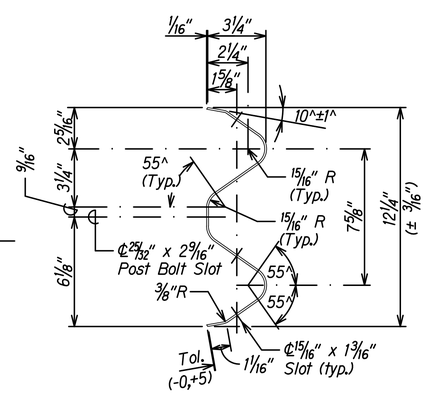

MIDWEST GUARDRAIL SYSTEM WITH
STANDARD 8" OFFSET BLOCK (SGR47)

ORIGINAL PLAN	SURVEY PLOTTED BY	DATE
	DRAWN BY	
NOTE BOOK	TRACED BY	
	DESIGNED BY	
	QUANTITIES BY	
No.	CHECKED BY	

JOSEPH R. SALVADOR
LICENSED PROFESSIONAL ENGINEER
No. 14094-C
HAWAII, U.S.A.

THIS WORK WAS PREPARED BY ME OR UNDER MY SUPERVISION.

SIGNATURE — EXPIRATION DATE OF THE LICENSE 04/2022

STATE OF HAWAII
DEPARTMENT OF TRANSPORTATION
HIGHWAYS DIVISION

31" W-BEAM GUARDRAIL WITH
STANDARD 8" OFFSET BLOCK

KAMEHAMEHA HIGHWAY
INTERSECTION IMPROVEMENTS
AT KAHEKILI HIGHWAY
Federal-Aid Project No. NH-083-1(082)

Scale: None — Date: Sept. 2022

SHEET No. R-9 OF 15 SHEETS

FED. ROAD DIST. NO.	STATE	PROJ. NO.	FISCAL YEAR	SHEET NO.	TOTAL SHEETS
HAWAII	HAW.	NH-083-1(082)	2022	33	99

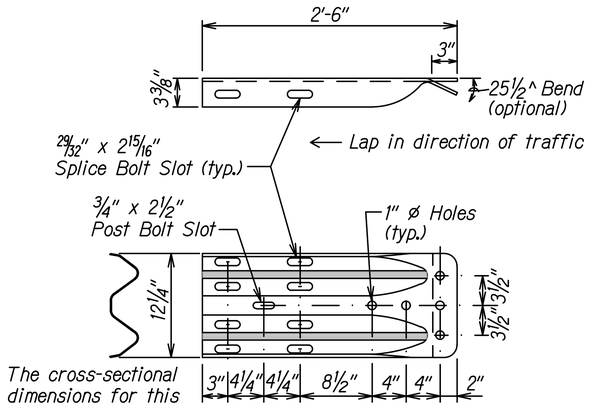

The cross-sectional dimensions for this part are to fit over part RWM02a on the approach end and under part RWM02a on the trailing end.

DESIGNATOR	BASE METAL THICKNESS
RWE02b	10 Gauge

W-BEAM TERMINAL CONNECTOR (RWE02b)

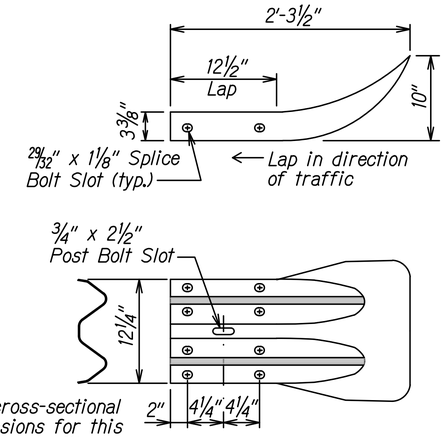

The cross-sectional dimensions for this part are to fit over part RWM02a on the approach end and under part RWM02a on the trailing end.

DESIGNATOR	BASE METAL THICKNESS
RWE01a	12 Gauge

W-BEAM END SECTION (FLARED RWE01a)

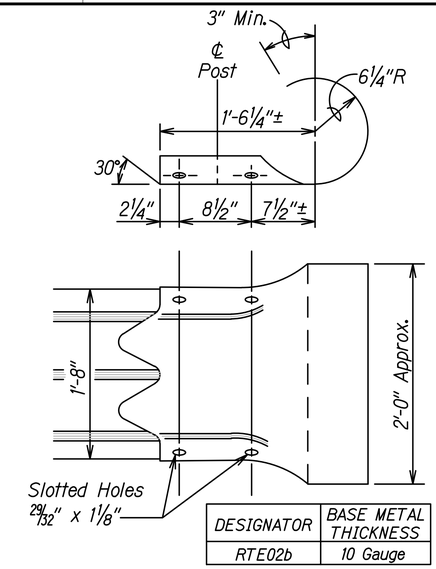

DESIGNATOR	BASE METAL THICKNESS
RTE02b	10 Gauge

THRIE-BEAM SECTION (ROUNDED) (RTE02b)

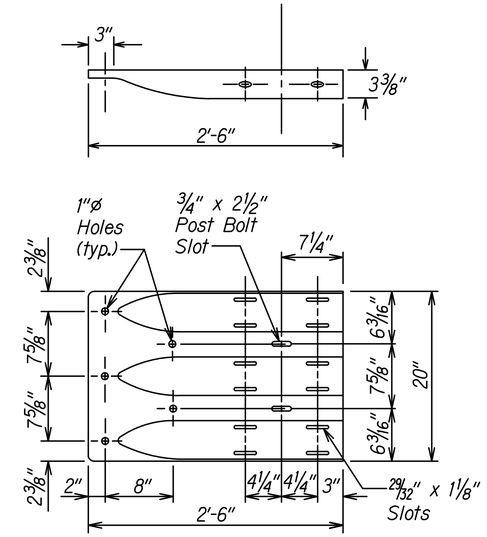

DESIGNATOR	BASE METAL THICKNESS
RTE01b	10 Gauge

THRIE-BEAM TERMINAL CONNECTOR (RTE01b)

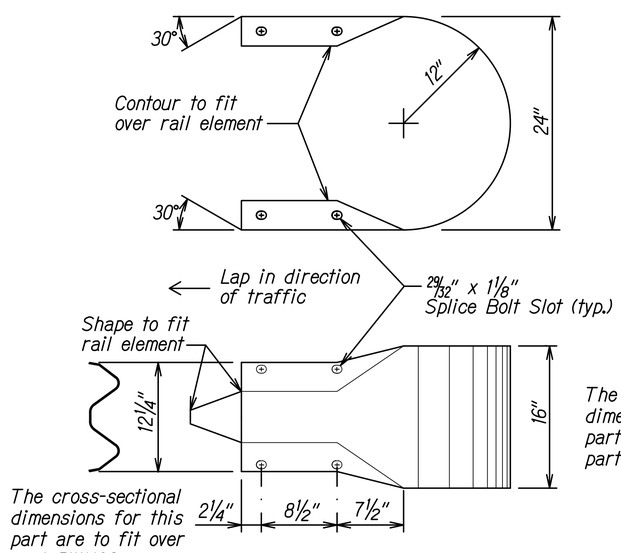

The cross-sectional dimensions for this part are to fit over part RWM02a

DESIGNATOR	BASE METAL THICKNESS
RWE06a	12 Gauge

W-BEAM END SECTION (BUFFER RWE06a)

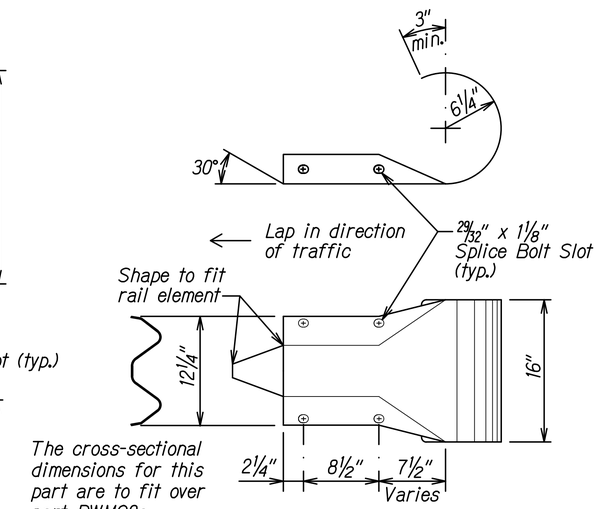

The cross-sectional dimensions for this part are to fit over part RWM02a

DESIGNATOR	BASE METAL THICKNESS
RWE03a	12 Gauge

W-BEAM END SECTION (ROUNDED RWE03a)

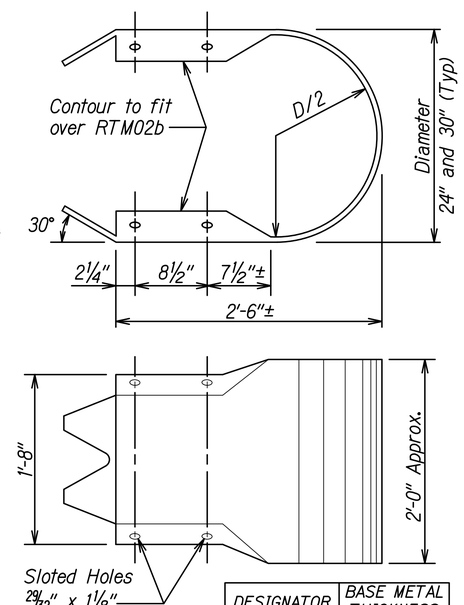

DESIGNATOR	BASE METAL THICKNESS
RTE03b & RTE04b	10 Gauge

THRIE-BEAM END SECTION (BUFFER RTE03b or RTE04b)

ORIGINAL PLAN	SURVEY PLOTTED BY	DATE
	DRAWN BY	
NOTE BOOK	TRACED BY	
	DESIGNED BY	
	QUANTITIES BY	
No.	CHECKED BY	

THIS WORK WAS PREPARED BY ME OR UNDER MY SUPERVISION.

JOSEPH R. SALVADOR — LICENSED PROFESSIONAL ENGINEER No. 14094-C — HAWAII, U.S.A.

SIGNATURE — EXPIRATION DATE OF THE LICENSE 04/2022

STATE OF HAWAII
DEPARTMENT OF TRANSPORTATION
HIGHWAYS DIVISION

GUARDRAIL TERMINAL CONNECTORS & END SECTIONS

KAMEHAMEHA HIGHWAY
INTERSECTION IMPROVEMENTS
AT KAHEKILI HIGHWAY
Federal-Aid Project No. NH-083-1(082)

Scale: None — Date: Sept. 2022

SHEET No. R-10 OF 15 SHEETS

FED. ROAD DIST. NO.	STATE	PROJ. NO.	FISCAL YEAR	SHEET NO.	TOTAL SHEETS
HAWAII	HAW.	NH-083-1(082)	2022	34	99

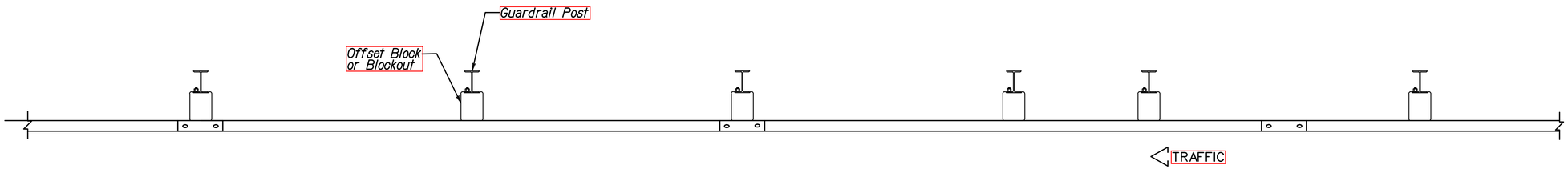

PLAN

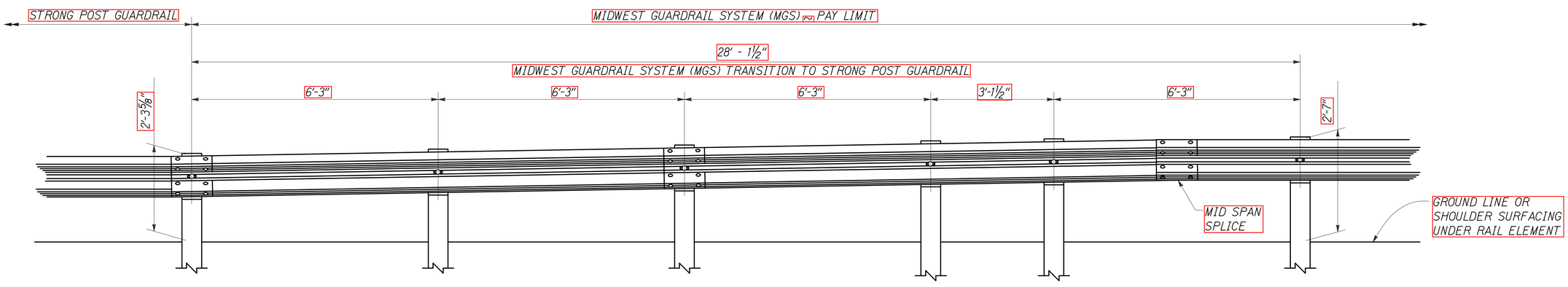

ELEVATION

ORIGINAL PLAN	SURVEY PLOTTED BY	DATE
	DRAWN BY	
NOTE BOOK	TRACED BY	
	DESIGNED BY	
	QUANTITIES BY	
No.	CHECKED BY	

JOSEPH R. SALVADOR
LICENSED PROFESSIONAL ENGINEER
No. 14094-C
HAWAII, U.S.A.

THIS WORK WAS PREPARED BY ME OR UNDER MY SUPERVISION.

SIGNATURE — EXPIRATION DATE OF THE LICENSE 04/2022

STATE OF HAWAII
DEPARTMENT OF TRANSPORTATION
HIGHWAYS DIVISION

MGS TRANSITION TO STRONG POST GUARDRAIL

KAMEHAMEHA HIGHWAY
INTERSECTION IMPROVEMENTS
AT KAHEKILI HIGHWAY
Federal-Aid Project No. NH-083-1(082)

Scale: None — Date: Sept. 2022

SHEET No. R-11 OF 15 SHEETS