FED. ROAD DIST. NO.	STATE	PROJ. NO.	FISCAL YEAR	SHEET NO.	TOTAL SHEETS
HAWAII	HAW.	NH-083-1(082)	2022	ADD 51	99

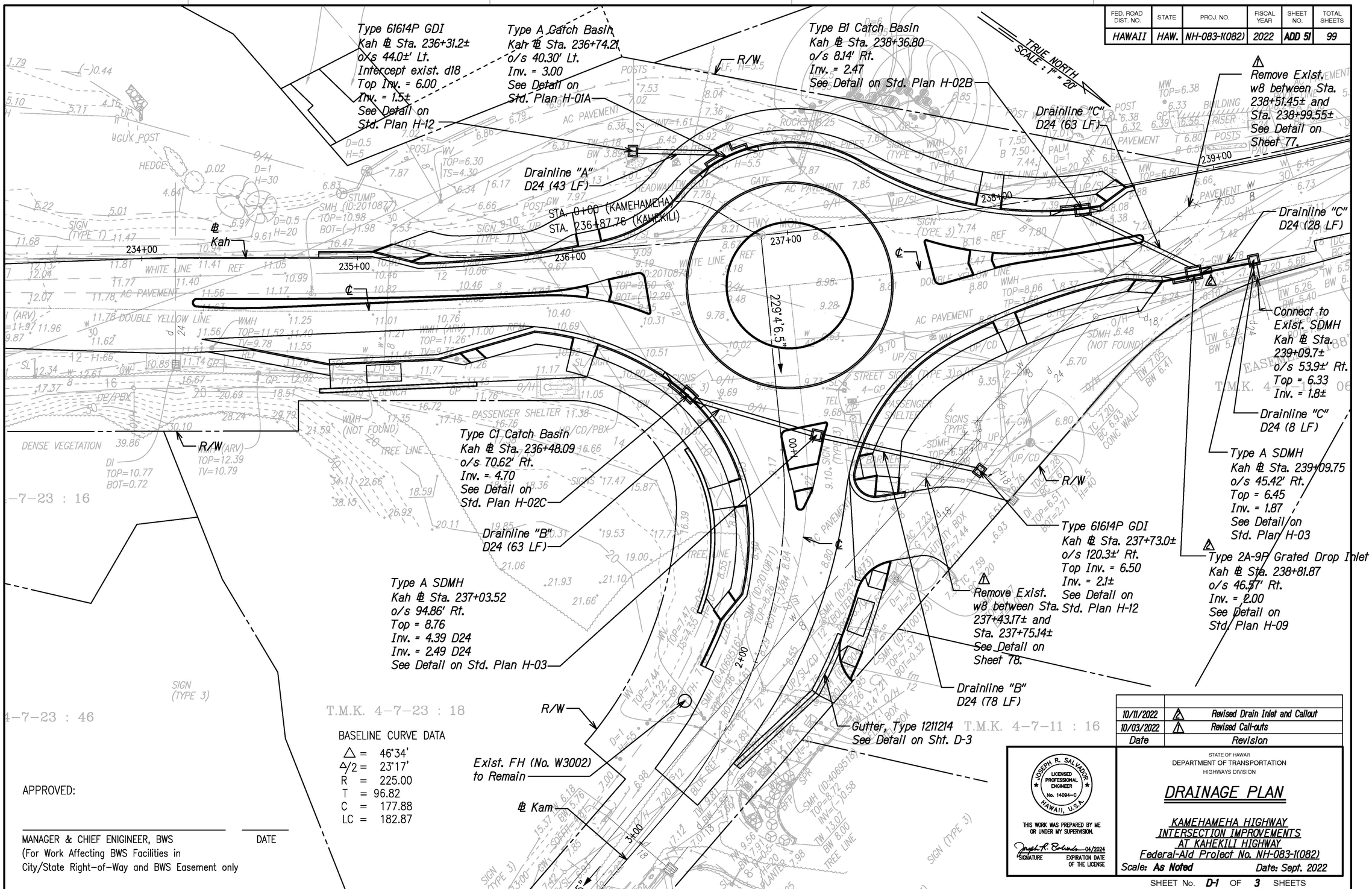

Date	Revision
10/11/2022	2 Revised Drain Inlet and Callout
10/03/2022	1 Revised Call-outs

JOSEPH R. SALVADOR
LICENSED PROFESSIONAL ENGINEER
No. 14094-C
HAWAII, U.S.A.

THIS WORK WAS PREPARED BY ME OR UNDER MY SUPERVISION.

SIGNATURE — EXPIRATION DATE OF THE LICENSE 04/2024

STATE OF HAWAII
DEPARTMENT OF TRANSPORTATION
HIGHWAYS DIVISION

DRAINAGE PLAN

KAMEHAMEHA HIGHWAY
INTERSECTION IMPROVEMENTS
AT KAHEKILI HIGHWAY
Federal-Aid Project No. NH-083-1(082)

Scale: As Noted — Date: Sept. 2022

SHEET No. D-1 OF 3 SHEETS

ADD 51

FED. ROAD DIST. NO.	STATE	PROJ. NO.	FISCAL YEAR	SHEET NO.	TOTAL SHEETS
HAWAII	HAW.	NH-083-1(082)	2022	ADD. 52	99

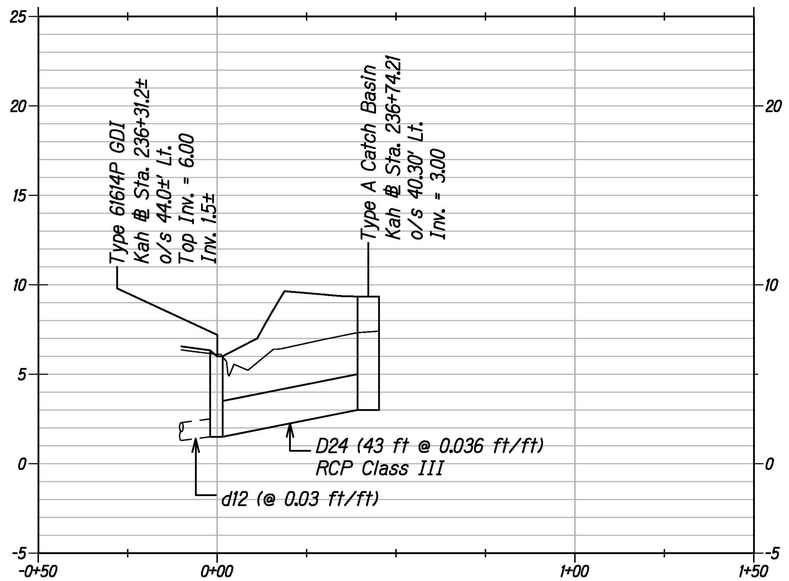

PROFILE - DRAINLINE "A"

Scale: Horiz. 1"=20'
Vert. 1"=4'

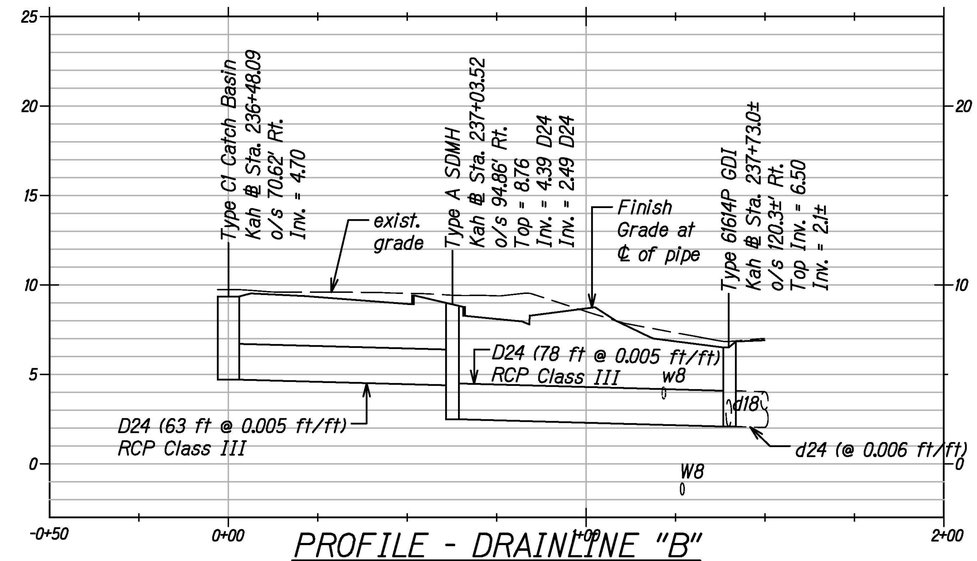

PROFILE - DRAINLINE "B"

Scale: Horiz. 1"=20'
Vert. 1"=4'

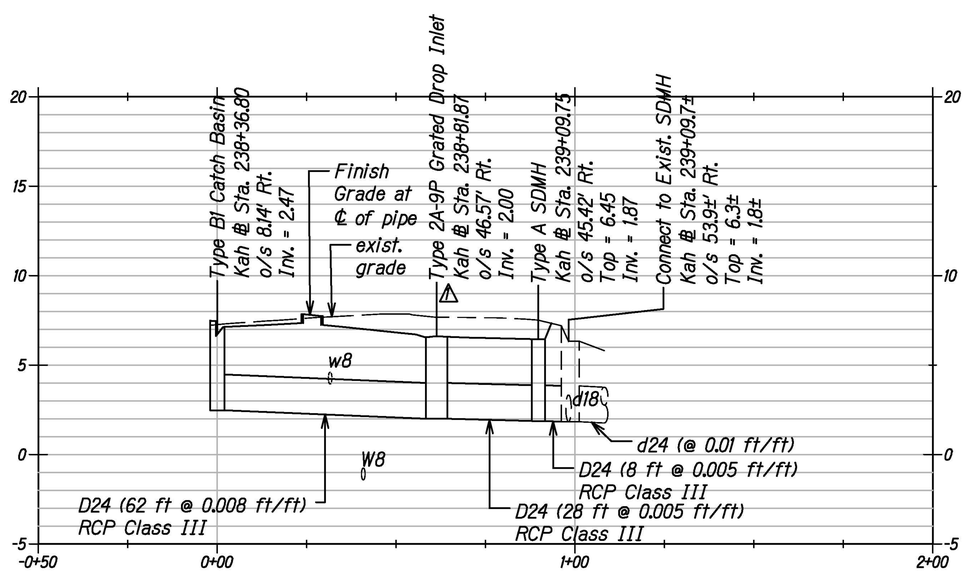

PROFILE - DRAINLINE "C"

Scale: Horiz. 1"=20'
Vert. 1"=4'

Date	Revision
10/11/2022	⚠ Revised Drain Inlet and Callout

JOSEPH R. SALVADOR
LICENSED PROFESSIONAL ENGINEER
No. 14094-C
HAWAII, U.S.A.

THIS WORK WAS PREPARED BY ME OR UNDER MY SUPERVISION.

SIGNATURE — EXPIRATION DATE OF THE LICENSE 04/2024

STATE OF HAWAII
DEPARTMENT OF TRANSPORTATION
HIGHWAYS DIVISION

DRAINAGE PROFILES

KAMEHAMEHA HIGHWAY
INTERSECTION IMPROVEMENTS
AT KAHEKILI HIGHWAY
Federal-Aid Project No. NH-083-1(082)

Scale:
Date: Sept. 2022

SHEET No. D-2 OF 3 SHEETS

ORIGINAL PLAN
NOTE BOOK No.
SURVEY PLOTTED BY
DRAWN BY
TRACED BY
DESIGNED BY
QUANTITIES BY
CHECKED BY
DATE

FED. ROAD DIST. NO.	STATE	PROJ. NO.	FISCAL YEAR	SHEET NO.	TOTAL SHEETS
HAWAII	HAW.	NH-083-1(082)	2022	53	99

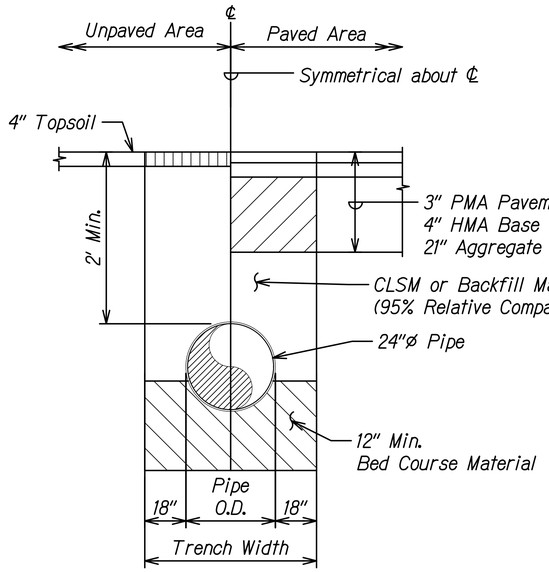

TYPICAL TRENCH RESTORATION DETAIL

Not to Scale

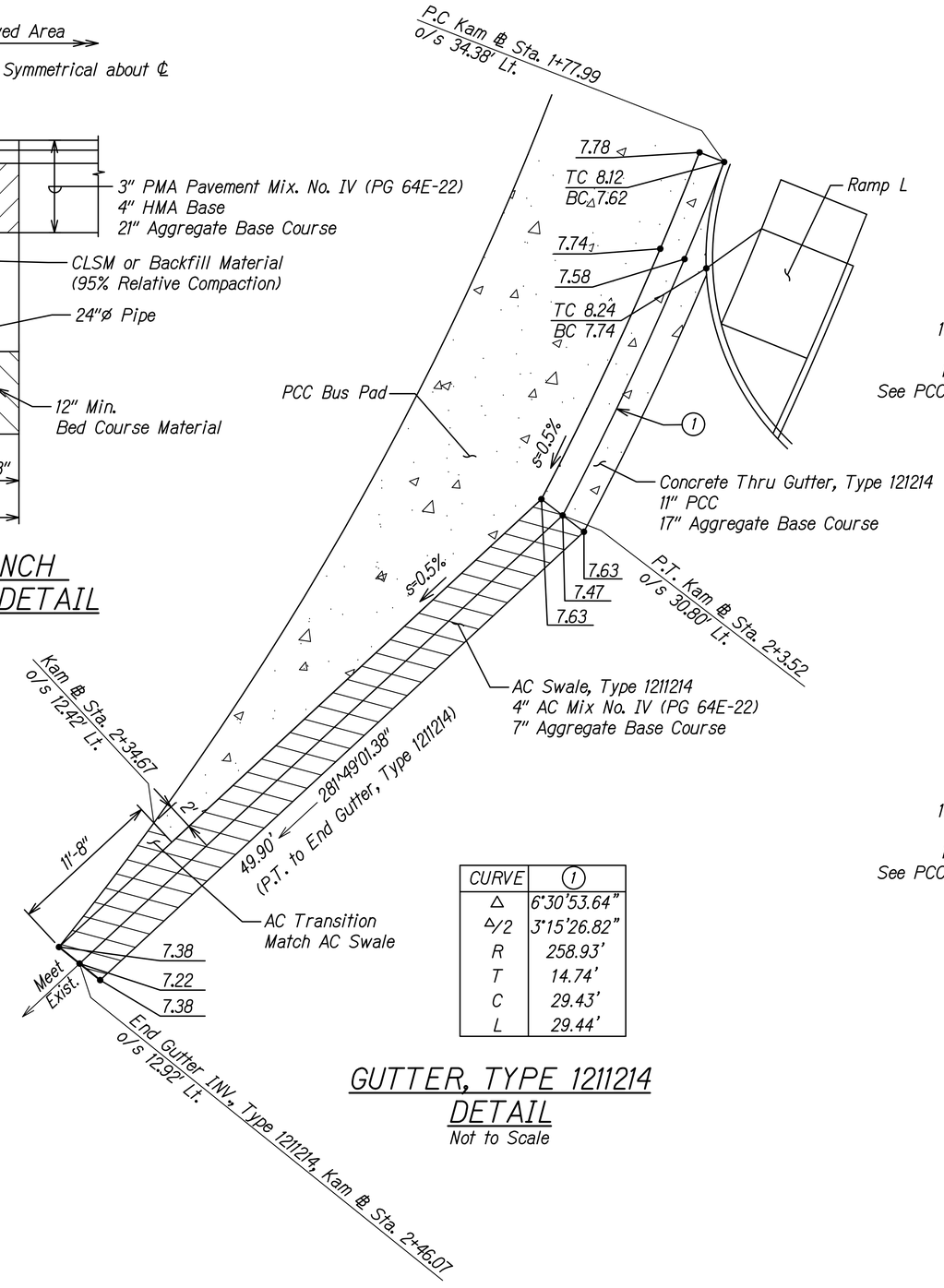

CURVE	1
Δ	6°30'53.64"
Δ/2	3°15'26.82"
R	258.93'
T	14.74'
C	29.43'
L	29.44'

GUTTER, TYPE 1211214 DETAIL

Not to Scale

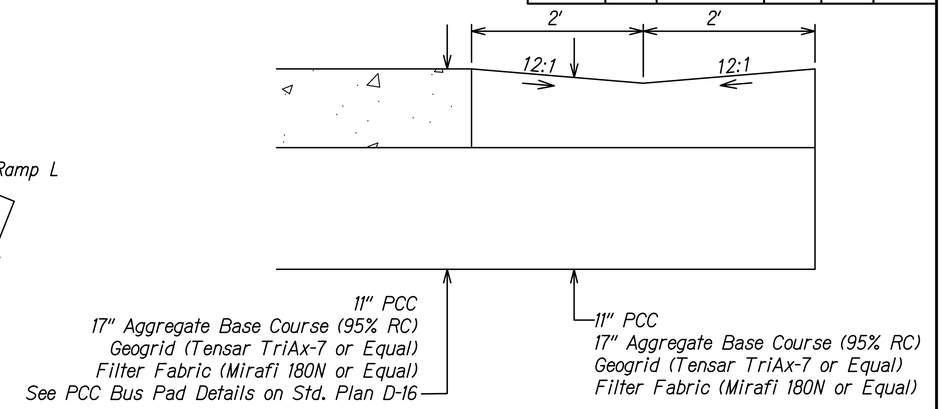

THRU GUTTER DETAIL

Not to Scale

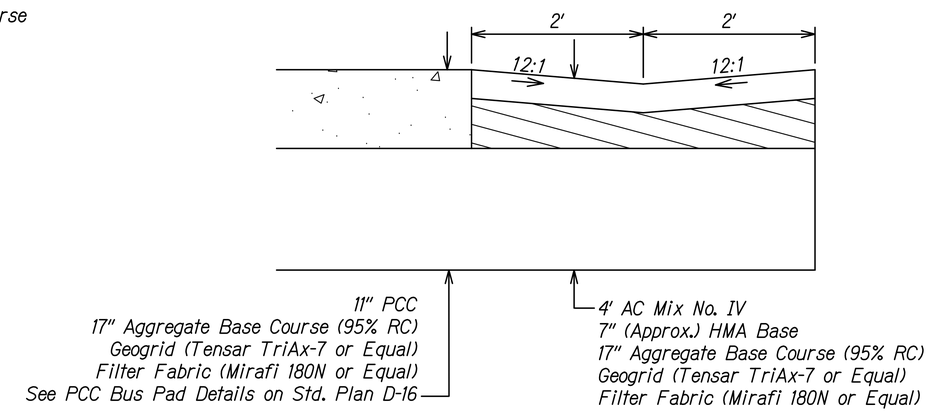

AC SWALE DETAIL

Not to Scale

ORIGINAL PLAN	SURVEY PLOTTED BY	DATE
	DRAWN BY	
NOTE BOOK	TRACED BY	
	DESIGNED BY	
	QUANTITIES BY	
No.	CHECKED BY	

JOSEPH R. SALVADOR
LICENSED PROFESSIONAL ENGINEER
No. 14094-C
HAWAII, U.S.A.

THIS WORK WAS PREPARED BY ME OR UNDER MY SUPERVISION.

SIGNATURE — EXPIRATION DATE OF THE LICENSE 04/2022

STATE OF HAWAII
DEPARTMENT OF TRANSPORTATION
HIGHWAYS DIVISION

MISCELLANEOUS DRAINAGE DETAILS

KAMEHAMEHA HIGHWAY
INTERSECTION IMPROVEMENTS
AT KAHEKILI HIGHWAY
Federal-Aid Project No. NH-083-1(082)

Scale: **Not to Scale** Date: Sept. 2022

SHEET No. D-3 OF 3 SHEETS