FED. ROAD DIST. NO.	STATE	FED. AID PROJ. NO.	FISCAL YEAR	SHEET NO.	TOTAL SHEETS
HAWAII	HAW.	F-083-1(10)	1978	49	160

WATER NOTES:

1. UNLESS OTHERWISE SPECIFIED, ALL MATERIALS AND CONSTRUCTION OF WATER SYSTEM FACILITIES AND APPURTENANCES SHALL BE IN ACCORDANCE WITH THE HONOLULU BOARD OF WATER SUPPLY'S WATER SYSTEM STANDARDS, DATED MARCH 1977, AND ALL SUBSEQUENT AMMENDMENTS AND ADDITIONS.

2. ALL PLANS APPROVED BY THE BOARD OF WATER SUPPLY ARE BASED SOLELY ON THE ADEQUACY OF THE WATER SUPPLY. ALL OTHER FEATURES OF THE WATER SYSTEM SUCH AS LINES, GRADES FITTINGS, ETC., SHALL BE THE RESPONSIBILITY OF THE ENGINEER WHO PREPARED THE PLANS. DRAINAGE AND OTHER FEATURES OF THE IMPROVEMENT SHALL NOT BE THE RESPONSIBILITY OF THE BOARD OF WATER SUPPLY.

3. PRIOR TO EXCAVATING FOR NEW UTILITY LINES, THE CONTRACTOR SHALL VERIFY IN THE FIELD THE LOCATION OF EXISTING WATER MAINS AND APPURTENANCES. WHERE THE INSTALLATION OF NEW UTILITY LINES ARE TO CROSS OVER OR UNDER EXISTING WATER MAINS THE CONTRACTOR SHALL EXPOSE THE EXISTING WATER MAINS PRIOR TO TRENCHING. EXCAVATION AROUND WATER MAINS SHALL BE DONE BY HAND.

4. THE CONTRACTOR SHALL NOTIFY THE BOARD OF WATER SUPPLY IN WRITING ONE WEEK PRIOR TO COMMENCING WORK BY THE MAINS.

5. WATER MAINS SHALL BE MAINTAINED IN SERVICE DURING THE CONSTRUCTION PERIOD UNTIL SUCH TIME THE ADJUSTMENTS ARE MADE.

6. THE EXISTENCE AND LOCATION OF UNDERGROUND UTILITIES AND STRUCTURES AS SHOWN ON THE PLANS ARE FROM THE LATEST AVAILABLE DATA BUT IS NOT GUARANTEED AS TO THE ACCURACY OR THE ENCOUNTERING OF OTHER OBSTACLES DURING THE COURSE OF THE WORK. THE CONTRACTOR SHALL BE RESPONSIBLE AND SHALL PAY FOR ALL DAMAGES TO EXISTING UTILITIES.

7. UNLESS OTHERWISE SPECIFIED, CONNECTIONS TO EXISTING WATER MAINS AND CHLORINATION OF NEW MAINS SHALL BE DONE BY THE CONTRACTOR, WITH THE B.W.S.INSPECTOR COORDINATING THE WORK. FOR DETAILS, CONTACT B.W.S. ENGINEERING DIVISION, CONSTRUCTION SECTION.

8. ALL METER BOXES INCLUDING FRAMES AND COVERS SHALL BE FURNISHED, INSTALLED AND PAID FOR BY THE CONTRACTOR.

9. TEST PRESSURE SHALL BE 250 PSI.

10. IN THE EVENT THAT MAINS OTHER THAN DUCTILE IRON ARE TO BE USED, THE PLANS SHALL BE RESUBMITTED FOR APPROVAL.

11. ALL CAST IRON (DUCTILE OR GRAY) PIPES, FITTINGS AND VALVES SHALL BE ENCLOSED IN PLASTIC MATERIAL IN ACCORDANCE WITH ANSI SPECIFICATIONS A21.5-1972 OR AWWA SPECIFICATIONS C105-72 "POLYETHYLENE ENCASEMENT FOR GRAY AND DUCTILE CAST IRON PIPING FOR WATER AND OTHER LIQUIDS."

12. VALVE ID TAGS SHALL BE AFFIXED ON THE UNDERSIDE OF ALL NEW MANHOLE AND VALVE BOX COVERS. SEE DETAIL.

13. REAPPROVAL SHALL BE REQUIRED IF THIS PROJECT IS NOT UNDER CONSTRUCTION WITHIN A PERIOD OF ONE YEAR (SEE RULES AND REGULATIONS OF THE BOARD OF WATER SUPPLY).

14. FIRE HYDRANTS SHALL BE EAST BAY MODEL 5 AS SPECIFIED IN THE WATER SYSTEM STANDARDS, JAMES-JONES MODEL J-3740, OR APPROVED EQUAL. BREAKAWAY BOLTS SHALL BE DRILLED 11/32" X 1-3/8".

15. MAINTENANCE OF WATER LINES BEYOND THE WATER METER SHALL BE THE RESPONSIBILITY OF THE OWNERS.

16. WATER PIPELINE EASEMENTS SHALL BE GRANTED TO THE BOARD OF WATER SUPPLY FOR ALL LINES TO BE CONVEYED TO THE BWS. WHICH ARE LOCATED WITHIN PRIVATE PROPERTY AND ROADWAYS THAT WILL NOT BE DEDICATED TO THE CITY.

ELECTRIC & TELEPHONE NOTES:

1. THE CONTRACTOR SHALL NOTIFY EACH UTILITY IN WRITING TEN WORKING DAYS PRIOR TO COMMENCING WORK ON THEIR RESPECTIVE UTILITY SYSTEM.

2. EXISTING ELECTRIC AND TELEPHONE SYSTEMS SHOWN ON THESE PLANS ARE LOCATED FROM THE BEST SOURCES AVAILABLE. THE CONTRACTOR SHALL CHECK AND VERIFY IN THE FIELD THE EXACT LOCATION AND DEPTH OF SAME.

3. CONTRACTOR TO STAKE OUT PROPOSED DUCTLINES, MANHOLES, HANDHOLES, POLE AND ANCHOR LOCATIONS. HECO TO CHECK LOCATIONS BEFORE CONTRACTOR UNDERTAKES EXCAVATION. CONTRACTOR TO REQUEST TONING OUT OF EXISTING HECO'S UNDERGROUND FACILITIES PRIOR TO STAKING OUT PROPOSED MANHOLES AND HANDHOLES. THE CONTRACTOR IS TO CALL HECO'S UNDERGROUND DIVISION AT 548-7395, 72 HOURS IN ADVANCE.

4. THE CONTRACTOR SHALL NOTIFY THE AFFECTED PROPERTY OWNERS AT LEAST ONE WEEK IN ADVANCE AS TO THE TIME AND DURATION THE TRENCHING AND INSTALLING OF UNDERGROUND ELECTRIC AND TELEPHONE SERVICE WILL BE PERFORMED IN THEIR PROPERTY.

5. UNLESS OTHERWISE SHOWN ON THE PLANS, THE MINIMUM DEPTH OF DUCT LINE FROM FINISHED GRADE:
   - A. TOP OF CONCRETE JACKET IN PAVEMENT AREAS WITHIN HWY RIGHT-OF-WAY WHERE DUCTS ARE CONCRETE ENCASED=3.0 FT
   - B. TOP OF CONCRETE JACKET IN SIDEWALK AREAS WITHIN HWY RIGHT-OF-WAY WHERE DUCTS ARE CONCRETE ENCASED=1.5 FT
   - C. TOP OF DUCTS, COMMERCIAL AREA,(DIRECT BURIAL) UP TO 3 DUCTS.
     IN PROPERTY = 2.0 FT
     IN SIDEWALK = 2.0 FT
     NOTE: 4 OR MORE DUCTS WILL BE CONCRETE ENCASED WITH A MIN. OF 1.5 FT CONCRETE COVER.
   - D. TOP OF CONCRETE JACKET, COMMERCIAL AREA, WHERE DUCTS ARE CONCRETE ENCASED
     IN PROPERTY = 2.0 FT
     IN SIDEWALK = 1.5 FT
   - E. TOP OF DUCTS, RESIDENTIAL AREA (DIRECT BURIAL)
     IN PROPERTY = 1.5 FT
     IN SIDEWALK = 2.0 FT
   - F. TOP OF CONCRETE JACKET, RESIDENTIAL AREA, WHERE DUCTS ARE CONCRETE ENCASED
     IN PROPERTY = 1.5 FT
     IN SIDEWALK = 1.5 FT

6. DUCTS ENCASED IN CONCRETE JACKET:
   - A. NORMAL DISTANCE FROM FACE OF JACKET TO ALL DUCTS TO BE 3 INCHES MINIMUM.
   - B. CLEAR DISTANCE OF 1.5 INCHES MINIMUM BETWEEN DUCTS OF SAME UTILITY.
   - C. CLEAR DISTANCE OF 3.0 INCHES MINIMUM BETWEEN HECO AND HTCO DUCT LINES.

7. ALL DUCTS AND CONDUITS CALLED FOR INSTALLATION IN CONCRETE JACKETS SHALL BE INSPECTED AND APPROVED BY THE RESPECTIVE REPRESENTATIVE OF HECO OR HTCO BEFORE CONCRETE PLACING. 24 HOUR MINIMUM NOTICE SHALL BE GIVEN BEFORE PLACING CONCRETE.

8. FINAL DEPTH OF ALL PULL BOXES, SERVICE BOXES, HANDHOLES AND MANHOLES SHALL BE DETERMINED IN THE FIELD BY THE ENGINEER.

9. ANCHOR HOLES SHALL BE BACKFILLED BY HECO OR ITS CONTRACTOR.

10. THE EXISTING CABLES, WHICH ARE IN DUCT LINES AND IN EXISTING HANDHOLES ARE ENERGIZED. THESE ENERGIZED INSULATED CABLES ARE TO REMAIN IN PLACE DURING CONSTRUCTION. ONLY HECO PERSONNEL ARE TO HANDLE THESE CABLES AND TO ERECT TEMPORARY GUARDS TO PROTECT THESE CABLES FROM DAMAGE. THE CONTRACTOR MUST EXERCISE DUE CARE AND TAKE PRECAUTIONS TO AVOID DISTURBANCE OF ENERGIZED CABLES,TEMPORARY GUARDS, ETC. AND SHALL WORK CAUTIOUSLY TO AVOID ACCIDENTS.

11. HTCO CONDUIT BENDS, THAT CONNECT DIRECTLY FROM PULLBOX OR HANDHOLE TO POLE SHALL BE DIRECT BURIAL, THE PAYMENT OF WHICH SHALL BE INCIDENTAL TO THE INSTALLATION OF THE PULLBOX, HANDHOLE, OR TO POLE EXCAVATION.

12. WHERE THE PLANS SHOW A TAP OR AN INTERCEPTION INTO AN EXISTING DUCTLINE, THE CONTRACTOR SHALL FIRST EXPOSE THE DUCTLINE. THE UTILITY COMPANY WILL BREAK INTO THE ENCASEMENT. THE CONTRACTOR SHALL THEN FINISH THE WORK UNDER HECO'S SUPERVISION. ALL WORK AND MATERIALS SHALL BE INCIDENTAL TO THE DUCTLINE, SERVICE BOX OR HANDHOLE FOR WHICH THE WORK IS BEING DONE.

13. WHERE POSSIBLE, SLOPE DUCTLINE TO DRAIN TOWARDS PULLBOX SERVICE BOX, HANDHOLE OR MANHOLE.

14. THE CONTRACTOR SHALL FURNISH AND INSTALL ALL MATERIALS TO COMPLETE CONSTRUCTION OF THE UNDERGROUND DUCTLINE SYSTEM INCLUDING RISER CONDUITS. ALL ELECTRIC DUCTS SHALL BE ENCASED IN CONCRETE, UNLESS OTHERWISE NOTED.

15. THE CONTRACTOR IS TO MANDREL TEST ALL DUCTLINES IN THE PRESENCE OF HECO'S INSPECTOR PRIOR TO ACCEPTANCE.

16. ELECTRIC DUCT BANKS SHALL ENTER AND LEAVE MANHOLES AND HANDHOLES AT ZERO PERCENT SLOPE FOR A MINIMUM DISTANCE OF TEN FEET.

17. HECO SHALL FURNISH AND THE STATE'S CONTRCTOR SHALL INSTALL A 1/8 INCH POLYOLEFIN PULL LINE(VETLINE CAT NO. 232) IN ALL DUCTS WHICH EXCEED 140 FEET IN LENGTH BETWEEN PULL POINTS.

18. THE STATE'S CONTRACTOR SHALL REMOVE, CLEAN AND DELIVER TO THE HECO'S WARD AVENUE WAREHOUSE THOSE EXISTING 2X4 HECO PRECAST HANDHOLES,FRAMES AND COVERS WHICH ARE DESIGNATED ON THE PLANS TO BE REMOVED. THE STATE'S CONTRACTOR SHALL CALL THE HECO WAREHOUSE AT LEAST 24 HOURS BEFORE DELIVERY (PHONE 548-3554). THIS WORK SHALL BE INCIDENTAL TO THE ELECTRICAL WORK.

C.C.O. 14
Note No.18 Deleted

ORIGINAL PLAN		DATE
NOTE BOOK	SURVEY PLOTTED BY	
	DRAWN BY	
	TRACED BY	
	DESIGNED BY	
No.	QUANTITIES BY	
	CHECKED BY	

APPROVED
Kenneth A. Minakami 10/3/78
CHIEF, PLANNING AND ENGINEERING, B.W.S. DATE
CITY AND COUNTY OF HONOLULU

as m.g. W.K.C. Yoo 9/14/78
HAWAIIAN ELECTRIC COMPANY DATE

H. Yamada 9/8/78
HAWAIIAN TELEPHONE COMPANY DATE

DOUGLAS S. KAMIYA REGISTERED PROFESSIONAL ENGINEER No. 3706 HAWAII, U.S.A.

THIS WORK WAS PREPARED BY ME OR UNDER MY SUPERVISION.
Douglas S. Kamiya

STATE OF HAWAII
DEPARTMENT OF TRANSPORTATION
LAND TRANSPORTATION FACILITIES DIVISION

UTILITY NOTES

KAMEHAMEHA HIGHWAY
IMPROVEMENT
(LIKELIKE HIGHWAY TO KOOLAU VIEW DRIVE)
PROJECT NO. F-083-1(10)

SCALE DATE 6/78 10/79

SHEET No. 1 OF 38 SHEETS

FED. ROAD DIST. NO.	STATE	FED. AID PROJ. NO.	FISCAL YEAR	SHEET NO.	TOTAL SHEETS
HAWAII	HAW.	F-083-1(10)	1978	50	160

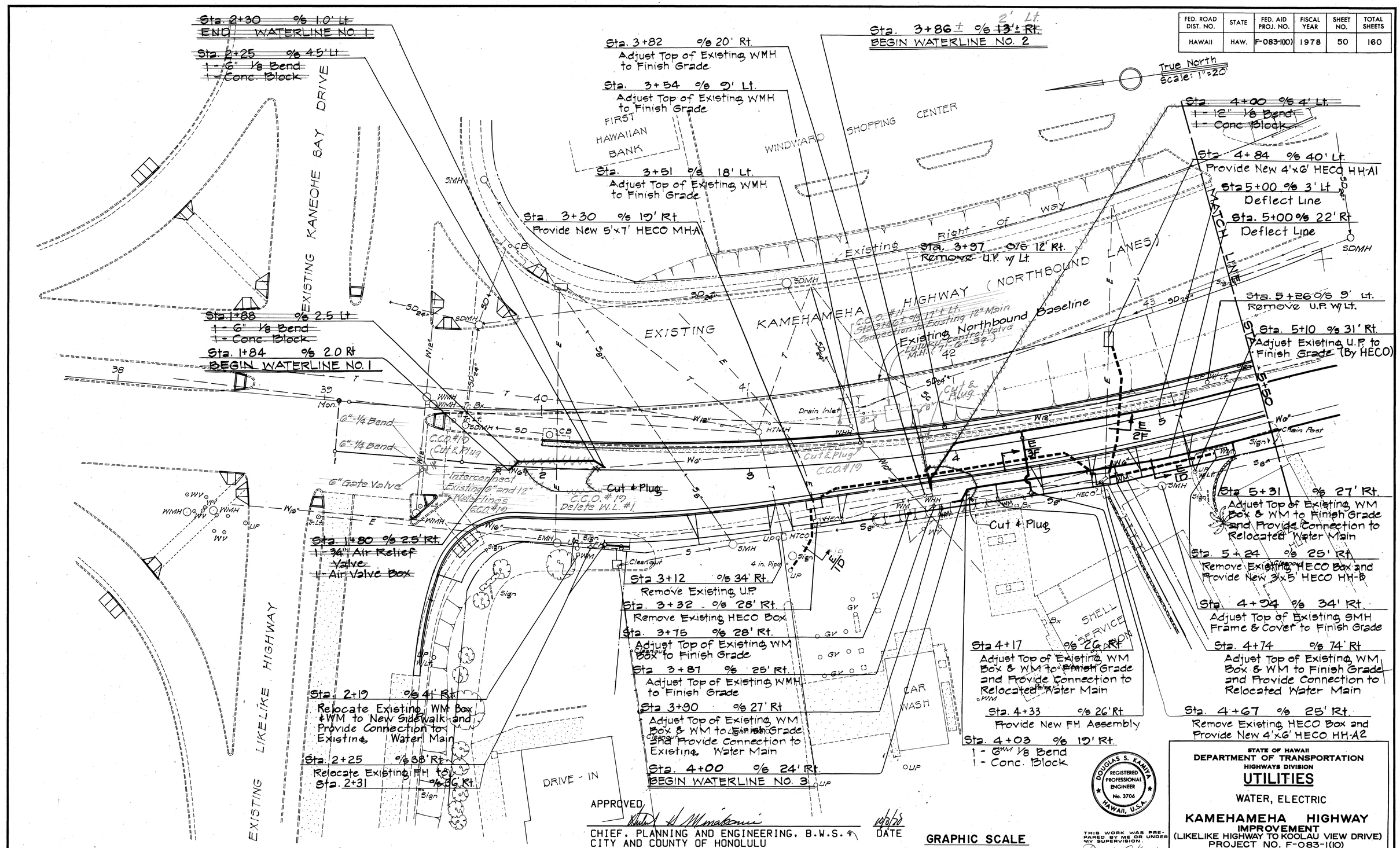

ORIGINAL PLAN	SURVEY PLOTTED BY	DATE
	DRAWN BY	
	TRACED BY	
NOTE BOOK	DESIGNED BY	
	QUANTITIES BY	
No.	CHECKED BY	

APPROVED

CHIEF, PLANNING AND ENGINEERING, B.W.S. — DATE 10/6/78

CITY AND COUNTY OF HONOLULU

HAWAIIAN ELECTRIC COMPANY — DATE 9/14/78

GRAPHIC SCALE

20 10 0 20 40

1 Inch = 20 Feet

DOUGLAS S. KAMIYA REGISTERED PROFESSIONAL ENGINEER No. 3706 HAWAII, U.S.A.

THIS WORK WAS PREPARED BY ME OR UNDER MY SUPERVISION.

STATE OF HAWAII
DEPARTMENT OF TRANSPORTATION
HIGHWAYS DIVISION

UTILITIES

WATER, ELECTRIC

KAMEHAMEHA HIGHWAY IMPROVEMENT

(LIKELIKE HIGHWAY TO KOOLAU VIEW DRIVE)
PROJECT NO. F-083-1(10)

SCALE: AS SHOWN — DATE AUG 1978

SHEET No. 2 OF 38 SHEETS

FED. ROAD DIST. NO.	STATE	FED. AID PROJ. NO.	FISCAL YEAR	SHEET NO.	TOTAL SHEETS
HAWAII	HAW.	F-083-1(10)	1978	51	160

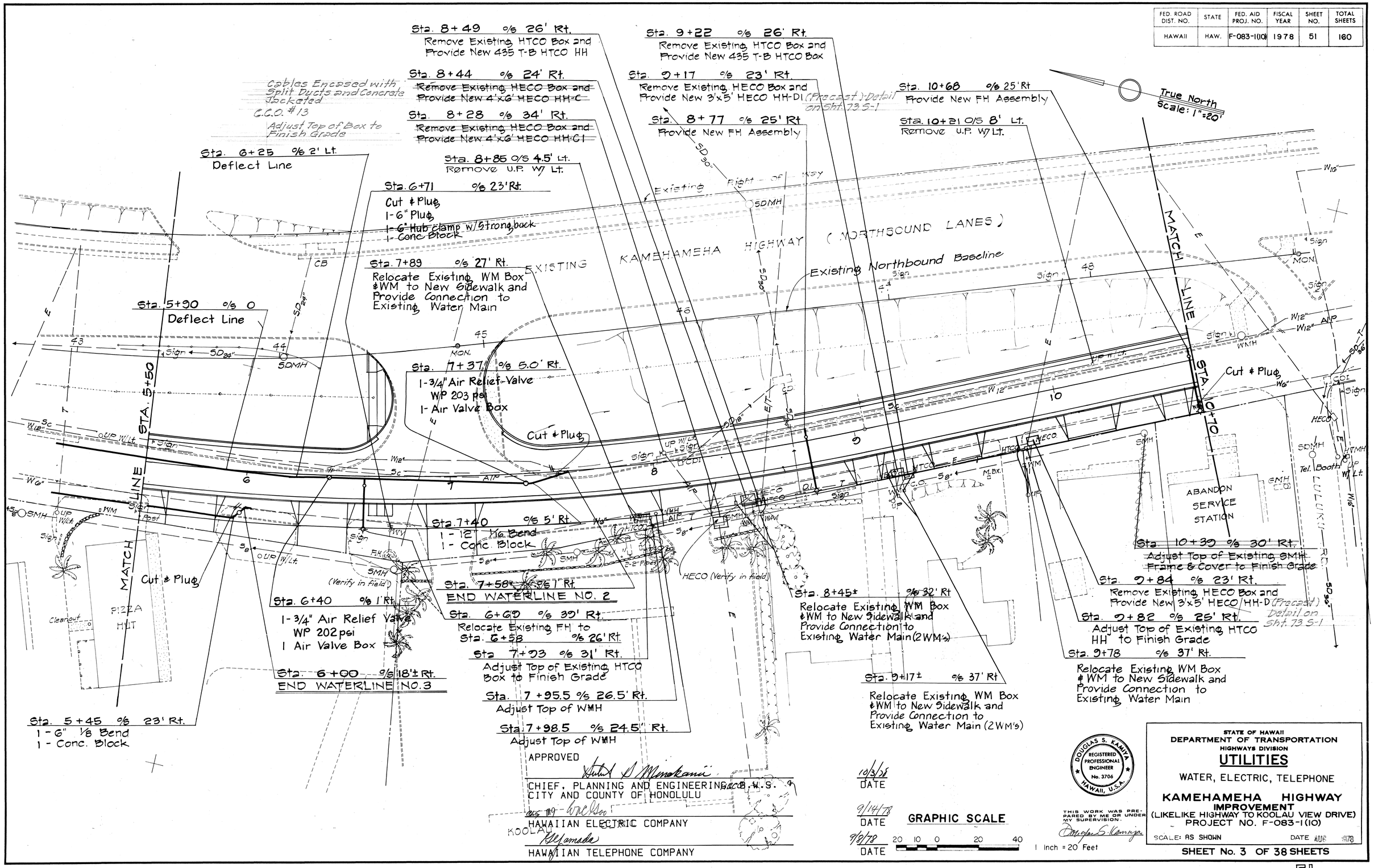

APPROVED

CHIEF, PLANNING AND ENGINEERING, C.C.H.S.
CITY AND COUNTY OF HONOLULU — 10/3/78 DATE

HAWAIIAN ELECTRIC COMPANY — 9/14/78 DATE

HAWAIIAN TELEPHONE COMPANY — 9/8/78 DATE

DOUGLAS S. KAMIYA REGISTERED PROFESSIONAL ENGINEER No. 3706 HAWAII, U.S.A.

THIS WORK WAS PREPARED BY ME OR UNDER MY SUPERVISION.

STATE OF HAWAII
DEPARTMENT OF TRANSPORTATION
HIGHWAYS DIVISION

UTILITIES

WATER, ELECTRIC, TELEPHONE

KAMEHAMEHA HIGHWAY IMPROVEMENT
(LIKELIKE HIGHWAY TO KOOLAU VIEW DRIVE)
PROJECT NO. F-083-1(10)

SCALE: AS SHOWN — DATE AUG 1978

SHEET No. 3 OF 38 SHEETS

ORIGINAL PLAN — SURVEY PLOTTED BY / DRAWN BY / TRACED BY / DESIGNED BY / QUANTITIES BY / CHECKED BY — DATE — NOTE BOOK No.

FED. ROAD DIST. NO.	STATE	FED. AID PROJ. NO.	FISCAL YEAR	SHEET NO.	TOTAL SHEETS
HAWAII	HAW.	F-083-1(10)	1978	52	160

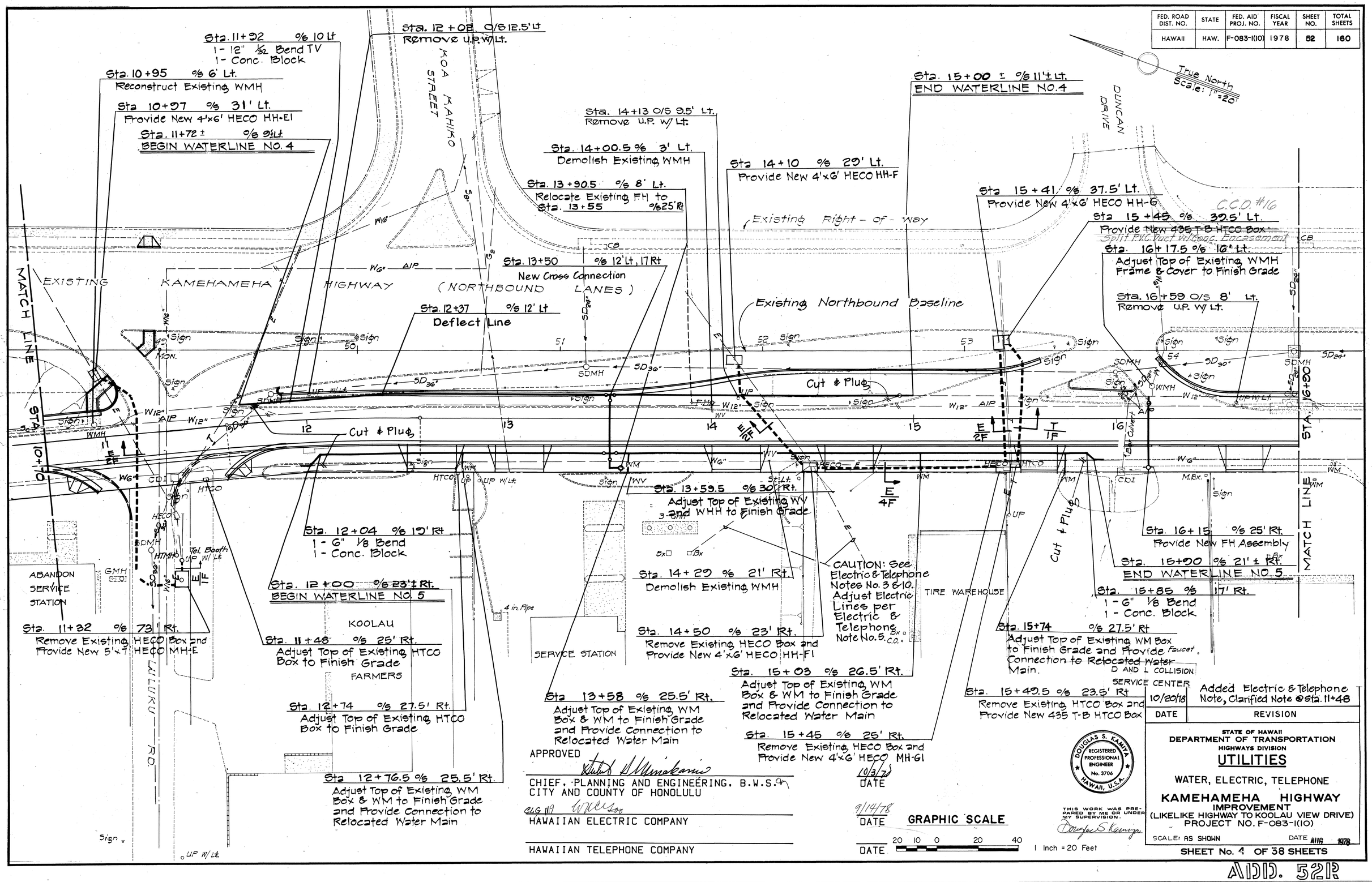

AIDD. 52R

FED. ROAD DIST. NO.	STATE	FED. AID PROJ. NO.	FISCAL YEAR	SHEET NO.	TOTAL SHEETS
HAWAII	HAW.	F-083-1(10)	1978	53	160

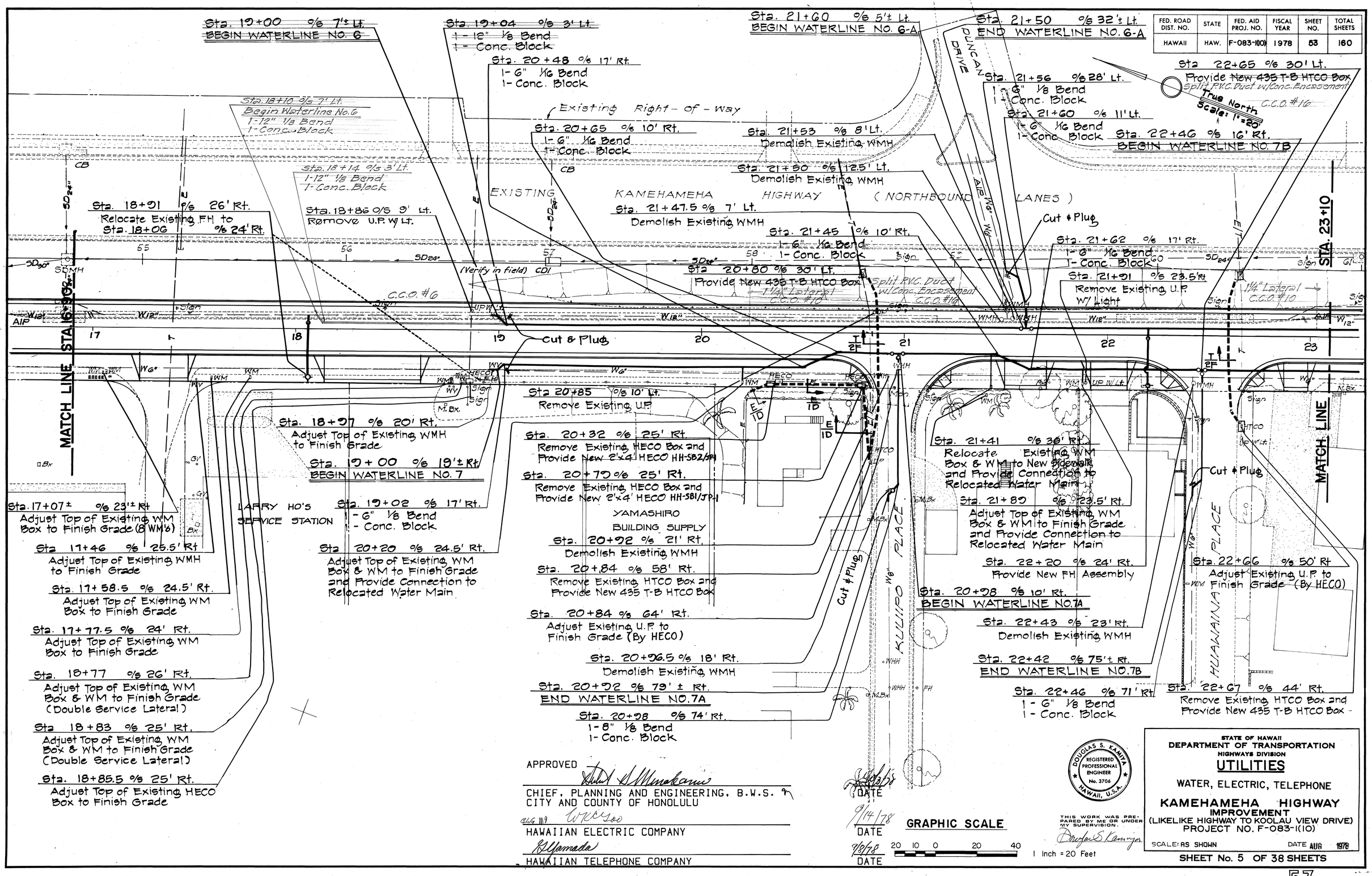

APPROVED

CHIEF, PLANNING AND ENGINEERING, B.W.S.
CITY AND COUNTY OF HONOLULU — DATE 9/14/78

HAWAIIAN ELECTRIC COMPANY — DATE 9/14/78

HAWAIIAN TELEPHONE COMPANY — DATE 9/8/78

GRAPHIC SCALE

20 10 0 20 40

1 Inch = 20 Feet

DOUGLAS S. KAMIYA
REGISTERED PROFESSIONAL ENGINEER
No. 3706
HAWAII, U.S.A.

THIS WORK WAS PREPARED BY ME OR UNDER MY SUPERVISION.

STATE OF HAWAII
DEPARTMENT OF TRANSPORTATION
HIGHWAYS DIVISION

UTILITIES

WATER, ELECTRIC, TELEPHONE

KAMEHAMEHA HIGHWAY IMPROVEMENT
(LIKELIKE HIGHWAY TO KOOLAU VIEW DRIVE)
PROJECT NO. F-083-1(10)

SCALE: AS SHOWN — DATE AUG 1978

SHEET No. 5 OF 38 SHEETS

ORIGINAL PLAN — SURVEY PLOTTED BY / DRAWN BY / TRACED BY / DESIGNED BY / QUANTITIES BY / CHECKED BY — DATE — NOTE BOOK No.

FED. ROAD DIST. NO.	STATE	FED. AID PROJ. NO.	FISCAL YEAR	SHEET NO.	TOTAL SHEETS
HAWAII	HAW.	F-083-1(10)	1978	54	160

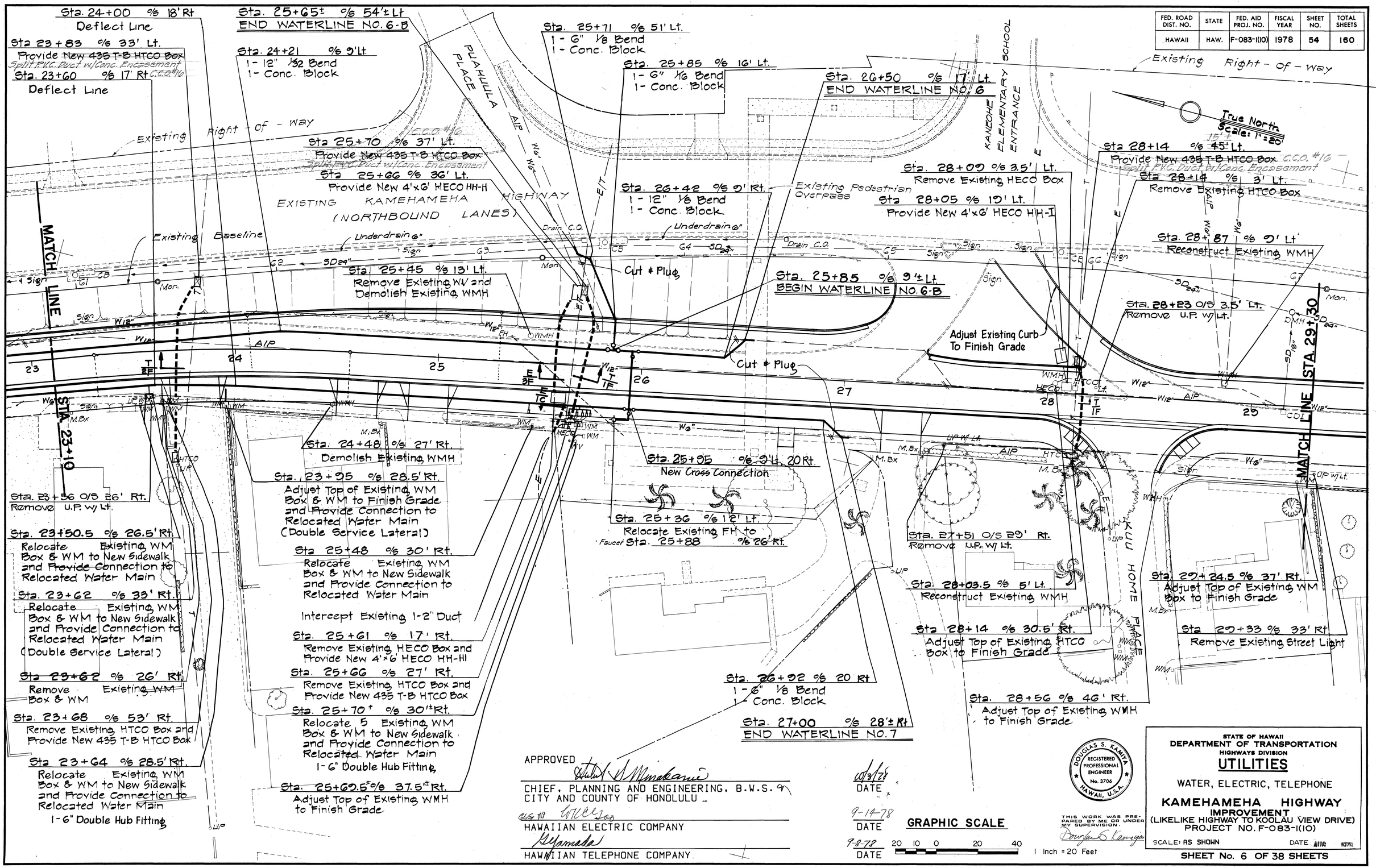

APPROVED

CHIEF, PLANNING AND ENGINEERING, B.W.S. & CITY AND COUNTY OF HONOLULU — DATE 10/3/78

HAWAIIAN ELECTRIC COMPANY — DATE 9-14-78

HAWAIIAN TELEPHONE COMPANY — DATE 9-8-78

GRAPHIC SCALE

20 10 0 20 40

1 Inch = 20 Feet

DOUGLAS S. KAMIYA REGISTERED PROFESSIONAL ENGINEER No. 3706 HAWAII, U.S.A.

THIS WORK WAS PREPARED BY ME OR UNDER MY SUPERVISION.

STATE OF HAWAII
DEPARTMENT OF TRANSPORTATION
HIGHWAYS DIVISION

UTILITIES

WATER, ELECTRIC, TELEPHONE

KAMEHAMEHA HIGHWAY IMPROVEMENT
(LIKELIKE HIGHWAY TO KOOLAU VIEW DRIVE)
PROJECT NO. F-083-1(10)

SCALE: AS SHOWN DATE

SHEET No. 6 OF 38 SHEETS

ORIGINAL PLAN | SURVEY PLOTTED BY | DRAWN BY | TRACED BY | DESIGNED BY | QUANTITIES BY | CHECKED BY | DATE | NOTE BOOK No.

FED. ROAD DIST. NO.	STATE	FED. AID PROJ. NO.	FISCAL YEAR	SHEET NO.	TOTAL SHEETS
HAWAII	HAW.	F-083-1(10)	1978	55	160

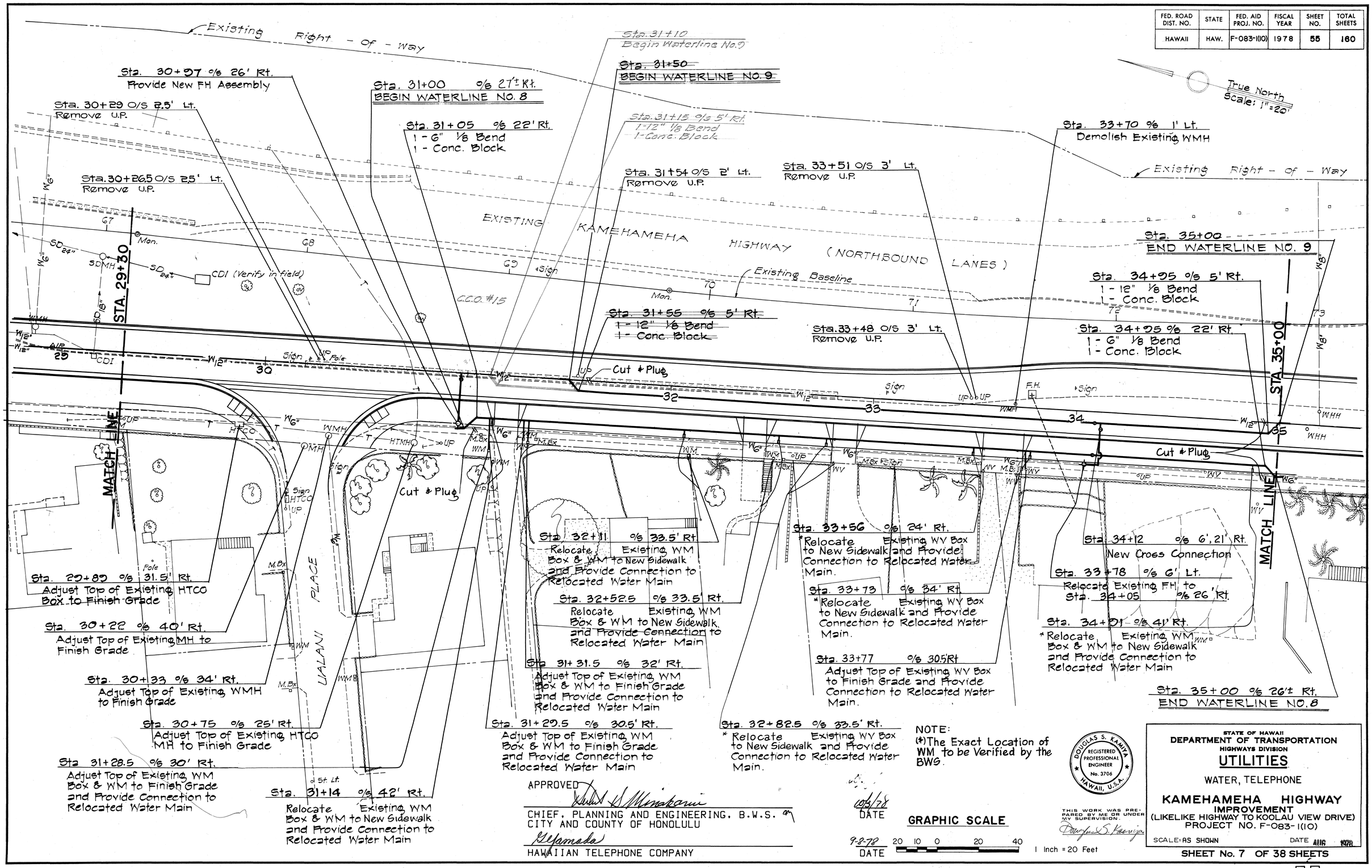

NOTE:
(*) The Exact Location of WM to be Verified by the BWS.

APPROVED

CHIEF, PLANNING AND ENGINEERING, B.W.S.
CITY AND COUNTY OF HONOLULU

10/5/78
DATE

HAWAIIAN TELEPHONE COMPANY

9-8-78
DATE

GRAPHIC SCALE
20 10 0 20 40
1 Inch = 20 Feet

DOUGLAS S. KAMIYA
REGISTERED PROFESSIONAL ENGINEER
No. 3706
HAWAII, U.S.A.

THIS WORK WAS PREPARED BY ME OR UNDER MY SUPERVISION.

STATE OF HAWAII
DEPARTMENT OF TRANSPORTATION
HIGHWAYS DIVISION

UTILITIES

WATER, TELEPHONE

KAMEHAMEHA HIGHWAY IMPROVEMENT
(LIKELIKE HIGHWAY TO KOOLAU VIEW DRIVE)
PROJECT NO. F-083-1(10)

SCALE: AS SHOWN DATE AUG 1978

SHEET No. 7 OF 38 SHEETS

ORIGINAL PLAN	SURVEY PLOTTED BY	DATE
	DRAWN BY	
	TRACED BY	
NOTE BOOK	DESIGNED BY	
	QUANTITIES BY	
No.	CHECKED BY	

FED. ROAD DIST. NO.	STATE	FED. AID PROJ. NO.	FISCAL YEAR	SHEET NO.	TOTAL SHEETS
HAWAII	HAW.	F-083-1(10)	1978	56	160

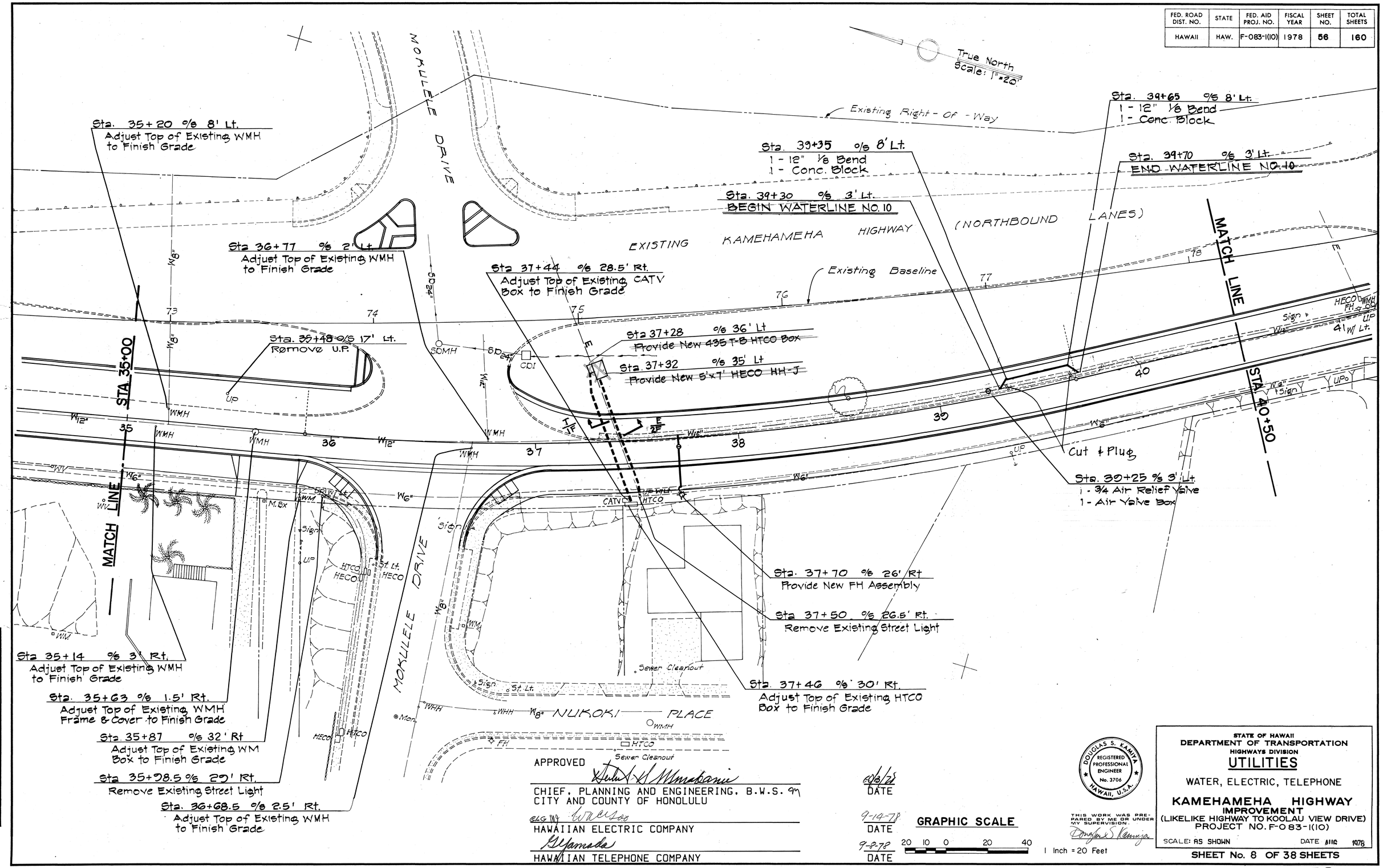

ORIGINAL PLAN		DATE
	SURVEY PLOTTED BY	
	DRAWN BY	
	TRACED BY	
	DESIGNED BY	
NOTE BOOK	QUANTITIES BY	
No.	CHECKED BY	

APPROVED

CHIEF, PLANNING AND ENGINEERING, B.W.S. 9m
CITY AND COUNTY OF HONOLULU — DATE 6/8/78

HAWAIIAN ELECTRIC COMPANY — DATE 9-14-78

HAWAIIAN TELEPHONE COMPANY — DATE 9-8-78

GRAPHIC SCALE

20 10 0 20 40

1 Inch = 20 Feet

DOUGLAS S. KAMIYA
REGISTERED PROFESSIONAL ENGINEER
No. 3706
HAWAII, U.S.A.

THIS WORK WAS PREPARED BY ME OR UNDER MY SUPERVISION.

STATE OF HAWAII
DEPARTMENT OF TRANSPORTATION
HIGHWAYS DIVISION

UTILITIES

WATER, ELECTRIC, TELEPHONE

KAMEHAMEHA HIGHWAY IMPROVEMENT

(LIKELIKE HIGHWAY TO KOOLAU VIEW DRIVE)
PROJECT NO. F-083-1(10)

SCALE: AS SHOWN — DATE AUG 1978

SHEET No. 8 OF 38 SHEETS

FED. ROAD DIST. NO.	STATE	FED. AID PROJ. NO.	FISCAL YEAR	SHEET NO.	TOTAL SHEETS
HAWAII	HAW.	F-083-1(10)	1978	57	160

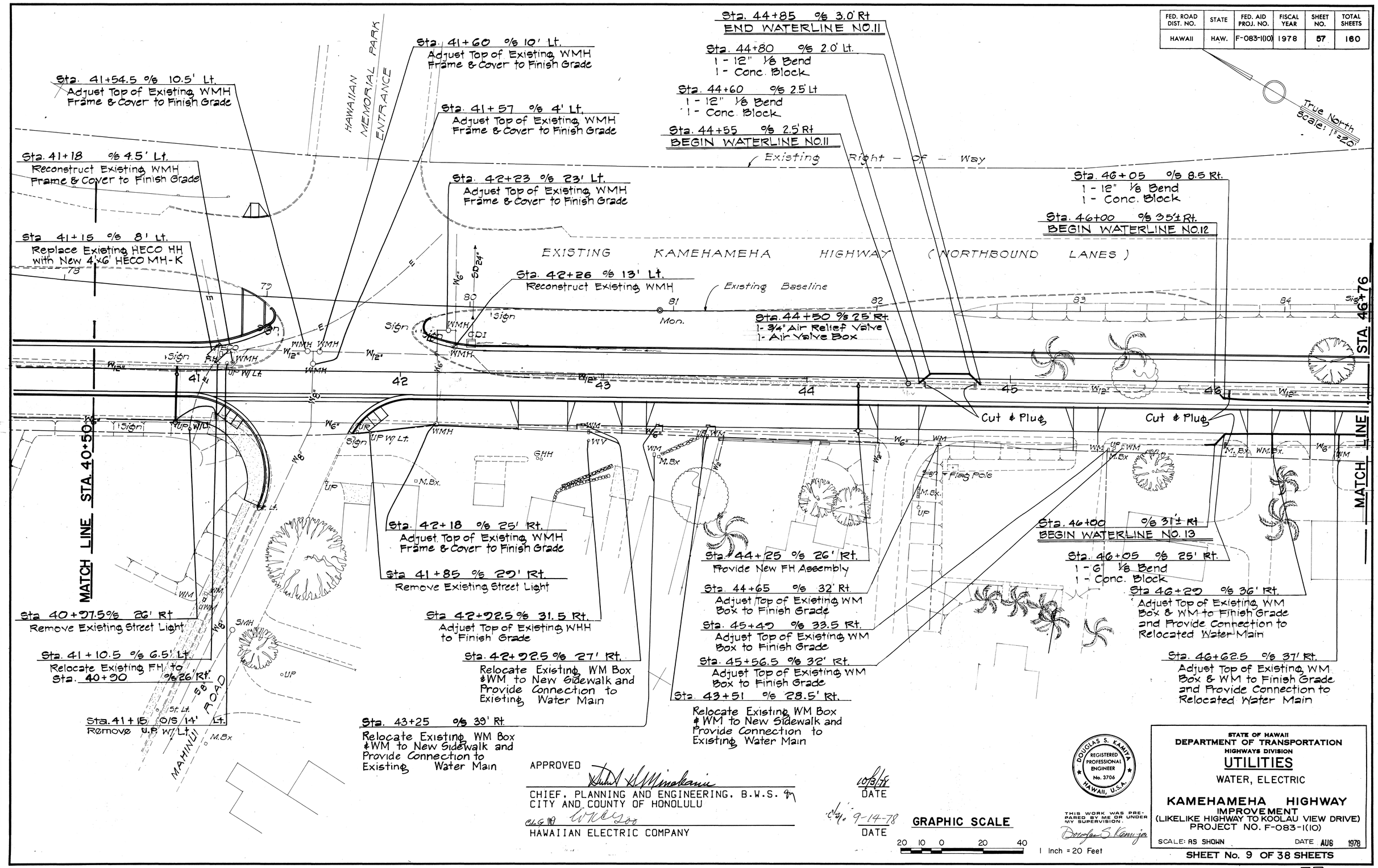

FED. ROAD DIST. NO.	STATE	FED. AID PROJ. NO.	FISCAL YEAR	SHEET NO.	TOTAL SHEETS
HAWAII	HAW.	F-083-1(10)	1978	58	160

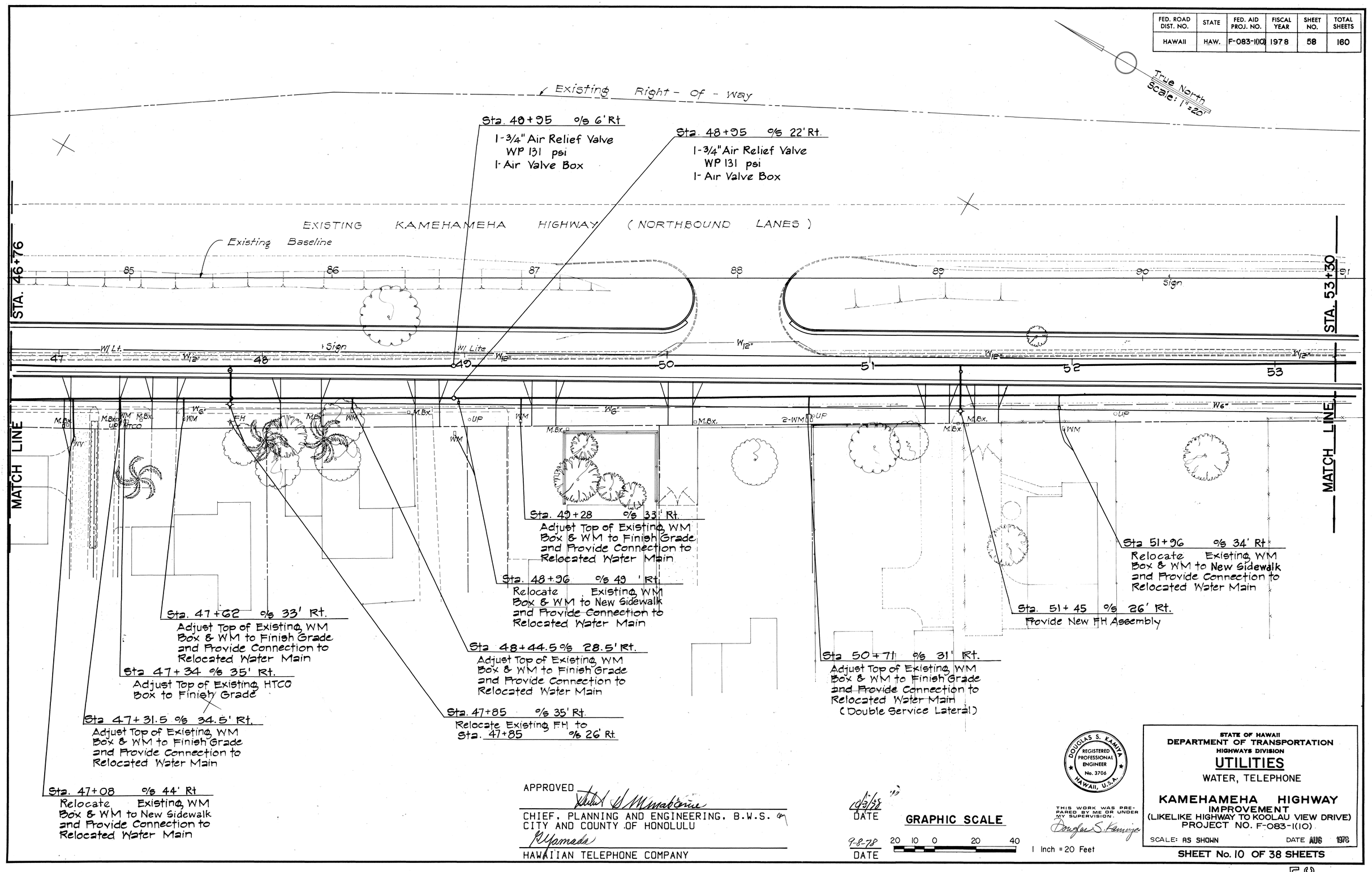

ORIGINAL PLAN	SURVEY PLOTTED BY	DATE
	DRAWN BY	
	TRACED BY	
NOTE BOOK	DESIGNED BY	
No.	QUANTITIES BY	
	CHECKED BY	

APPROVED

CHIEF, PLANNING AND ENGINEERING, B.W.S.
CITY AND COUNTY OF HONOLULU

DATE

HAWAIIAN TELEPHONE COMPANY

DATE

GRAPHIC SCALE

20 10 0 20 40

1 Inch = 20 Feet

DOUGLAS S. KAMIYA REGISTERED PROFESSIONAL ENGINEER No. 3706 HAWAII, U.S.A.

THIS WORK WAS PREPARED BY ME OR UNDER MY SUPERVISION.

STATE OF HAWAII
DEPARTMENT OF TRANSPORTATION
HIGHWAYS DIVISION

UTILITIES

WATER, TELEPHONE

KAMEHAMEHA HIGHWAY IMPROVEMENT
(LIKELIKE HIGHWAY TO KOOLAU VIEW DRIVE)
PROJECT NO. F-083-1(10)

SCALE: AS SHOWN DATE AUG 1978

SHEET No. 10 OF 38 SHEETS

FED. ROAD DIST. NO.	STATE	FED. AID PROJ. NO.	FISCAL YEAR	SHEET NO.	TOTAL SHEETS
HAWAII	HAW.	F-083-1(10)	1978	59	160

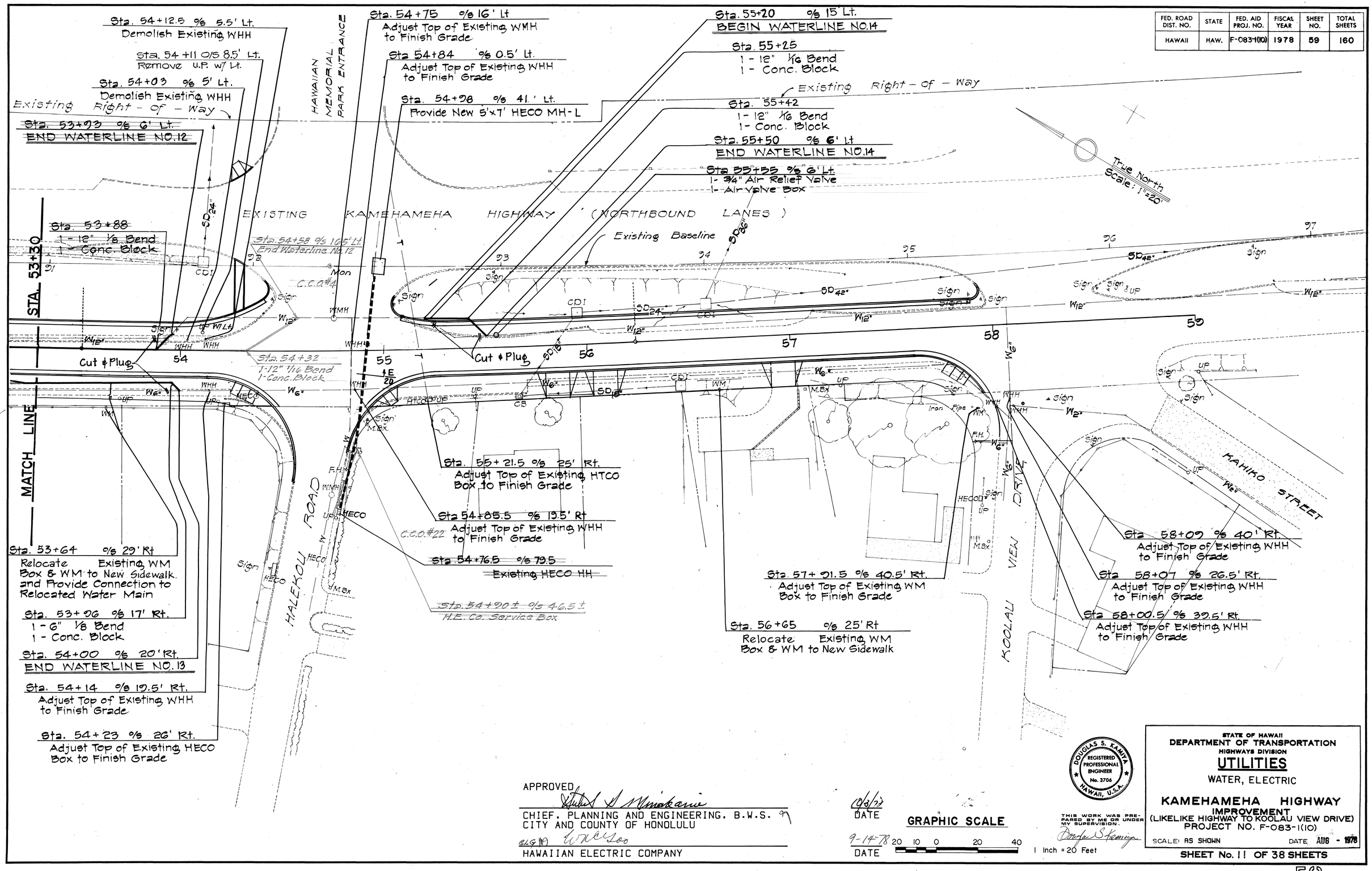

ORIGINAL PLAN	
SURVEY PLOTTED BY	
DRAWN BY	
TRACED BY	
DESIGNED BY	
QUANTITIES BY	
CHECKED BY	
DATE	
NOTE BOOK No.	

APPROVED

CHIEF, PLANNING AND ENGINEERING, B.W.S.
CITY AND COUNTY OF HONOLULU

10/3/77
DATE

HAWAIIAN ELECTRIC COMPANY

9-14-78
DATE

GRAPHIC SCALE

20 10 0 20 40

1 Inch = 20 Feet

DOUGLAS S. KAMIYA
REGISTERED PROFESSIONAL ENGINEER
No. 3706
HAWAII, U.S.A.

THIS WORK WAS PREPARED BY ME OR UNDER MY SUPERVISION.

STATE OF HAWAII
DEPARTMENT OF TRANSPORTATION
HIGHWAYS DIVISION

UTILITIES

WATER, ELECTRIC

KAMEHAMEHA HIGHWAY IMPROVEMENT
(LIKELIKE HIGHWAY TO KOOLAU VIEW DRIVE)
PROJECT NO. F-083-1(10)

SCALE: AS SHOWN DATE AUG - 1978

SHEET No. 11 OF 38 SHEETS

FED. ROAD DIST. NO.	STATE	FED. AID PROJ. NO.	FISCAL YEAR	SHEET NO.	TOTAL SHEETS
HAWAII	HAW.	F-083-1(10)	1978	60	160

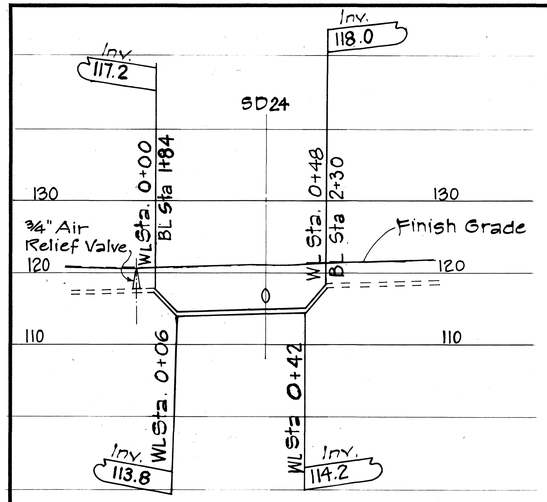

PROFILE - WATERLINE NO. 1

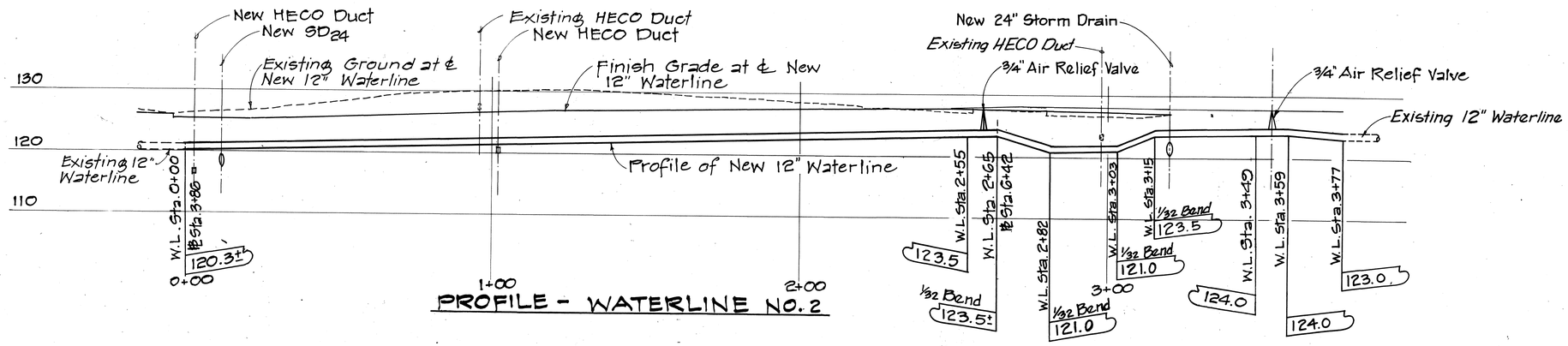

PROFILE - WATERLINE NO. 2

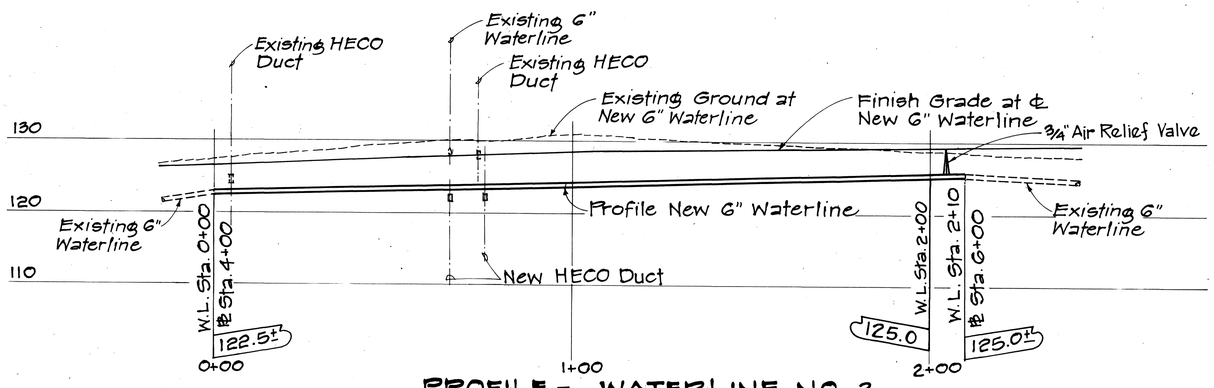

PROFILE - WATERLINE NO. 3

GRAPHIC SCALES

20 10 0 20 40 HORIZ. SCALE 1" = 20'

10 5 0 10 20 VERT. SCALE 1" = 10'

SCALE IN FEET

ORIGINAL PLAN | SURVEY PLOTTED BY | DRAWN BY | TRACED BY | DESIGNED BY | QUANTITIES BY | CHECKED BY | DATE | NOTE BOOK No.

APPROVED

Richard D. Minakami

CHIEF, PLANNING AND ENGINEERING, B.W.S.
CITY AND COUNTY OF HONOLULU

10/31/78
DATE

DOUGLAS S. KAMIYA REGISTERED PROFESSIONAL ENGINEER No. 3706 HAWAII, U.S.A.

THIS WORK WAS PREPARED BY ME OR UNDER MY SUPERVISION.

Douglas S. Kamiya

STATE OF HAWAII
DEPARTMENT OF TRANSPORTATION
LAND TRANSPORTATION FACILITIES DIVISION

UTILITY PROFILES
WATER
KAMEHAMEHA HIGHWAY
IMPROVEMENT
(LIKELIKE HIGHWAY TO KOOLAU VIEW DRIVE)
PROJECT NO. F-083-1(10)

SCALE: AS SHOWN DATE AUG 1978

SHEET No. 12 OF 38 SHEETS

FED. ROAD DIST. NO.	STATE	FED. AID PROJ. NO.	FISCAL YEAR	SHEET NO.	TOTAL SHEETS
HAWAII	HAW.	F-083-1(10)	1978	61	160

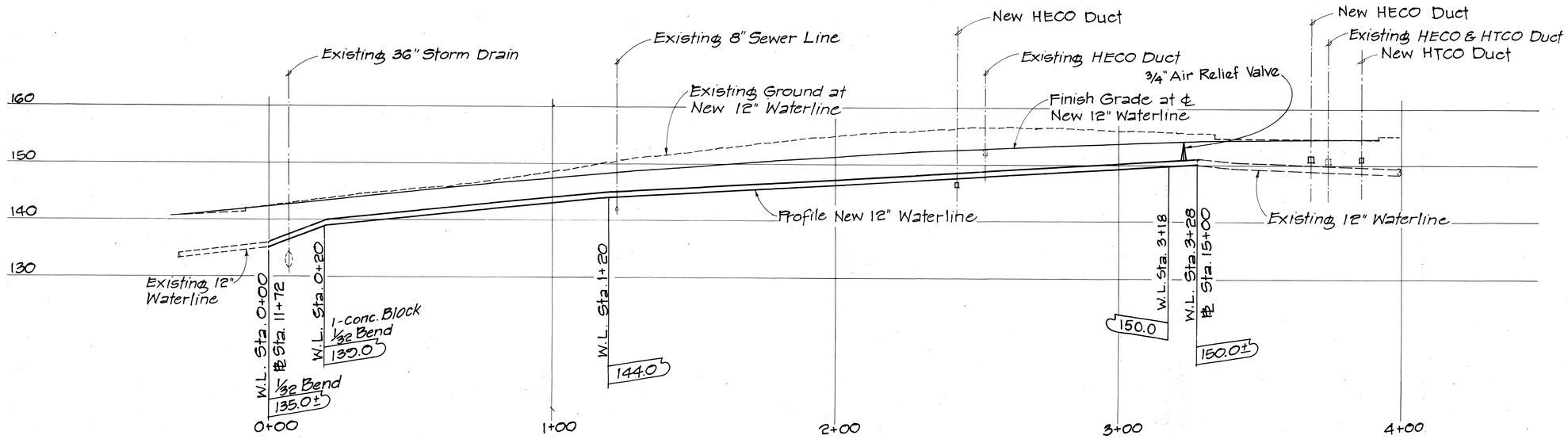

PROFILE - WATERLINE NO. 4

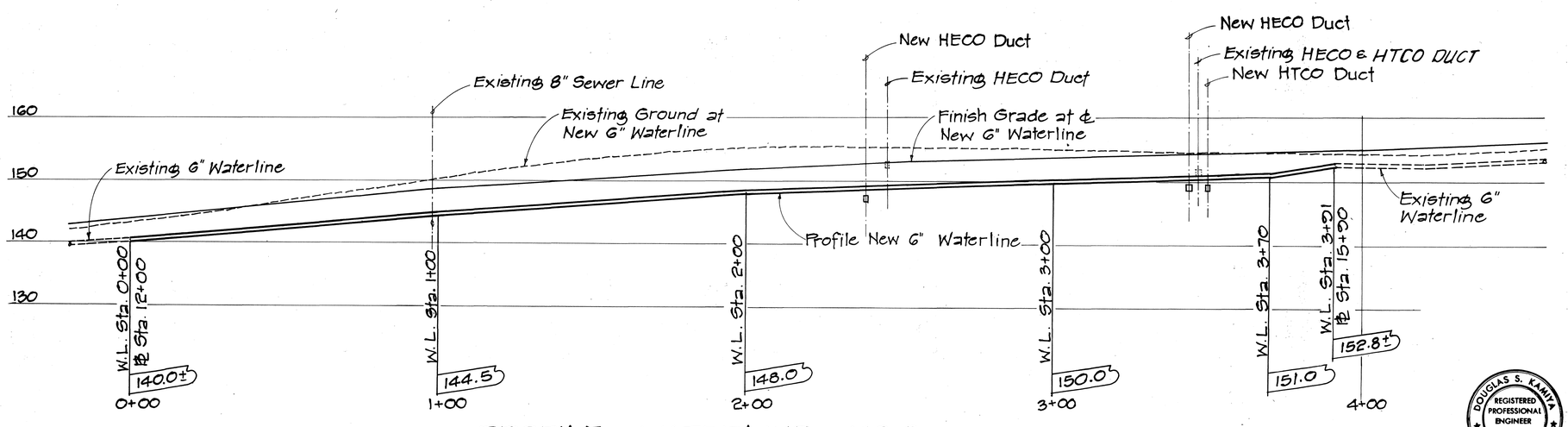

PROFILE - WATERLINE NO. 5

GRAPHIC SCALES

20 10 0 20 40 — HORIZ. SCALE 1" = 20'

10 5 0 10 20 — VERT. SCALE 1" = 10'

SCALE IN FEET

APPROVED

Richard H. Minakami

CHIEF, PLANNING AND ENGINEERING, B.W.S.
CITY AND COUNTY OF HONOLULU

10/3/78
DATE

DOUGLAS S. KAMIYA
REGISTERED PROFESSIONAL ENGINEER
No. 3706
HAWAII, U.S.A.

THIS WORK WAS PREPARED BY ME OR UNDER MY SUPERVISION.

Douglas S. Kamiya

STATE OF HAWAII
DEPARTMENT OF TRANSPORTATION
LAND TRANSPORTATION FACILITIES DIVISION

UTILITY PROFILES
WATER
KAMEHAMEHA HIGHWAY
IMPROVEMENT
(LIKELIKE HIGHWAY TO KOOLAU VIEW DRIVE)
PROJECT NO. F - 083 - 1 (10)

SCALE : AS SHOWN — DATE AUG 1978

SHEET No. 13 OF 38 SHEETS

ORIGINAL PLAN	SURVEY PLOTTED BY	DATE
	DRAWN BY	
	TRACED BY	
NOTE BOOK	DESIGNED BY	
	QUANTITIES BY	
No.	CHECKED BY	

FED. ROAD DIST. NO.	STATE	FED. AID PROJ. NO.	FISCAL YEAR	SHEET NO.	TOTAL SHEETS
HAWAII	HAW.	F-083-K(10)	1978	62	160

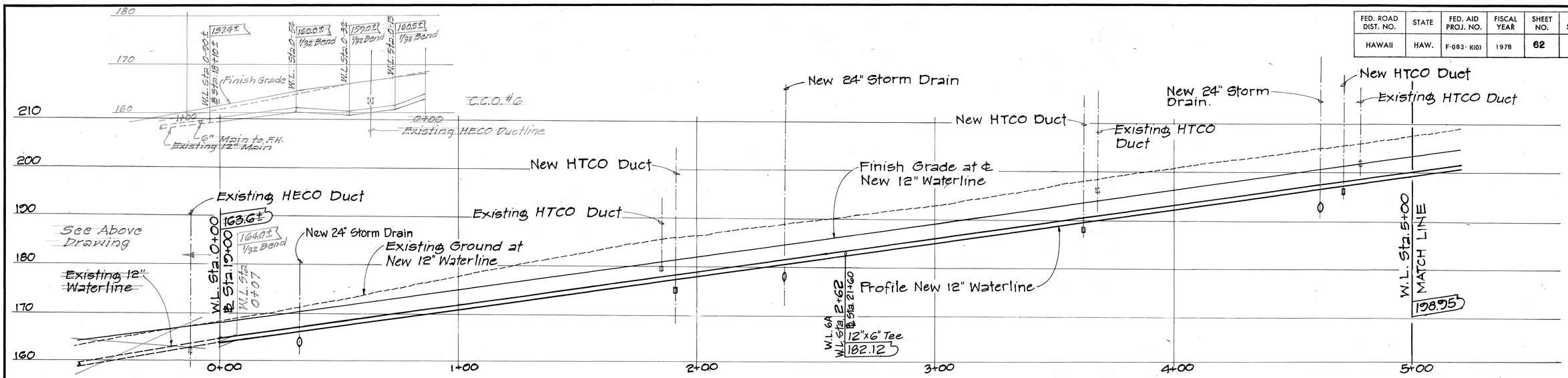

PROFILE - WATERLINE NO. 6

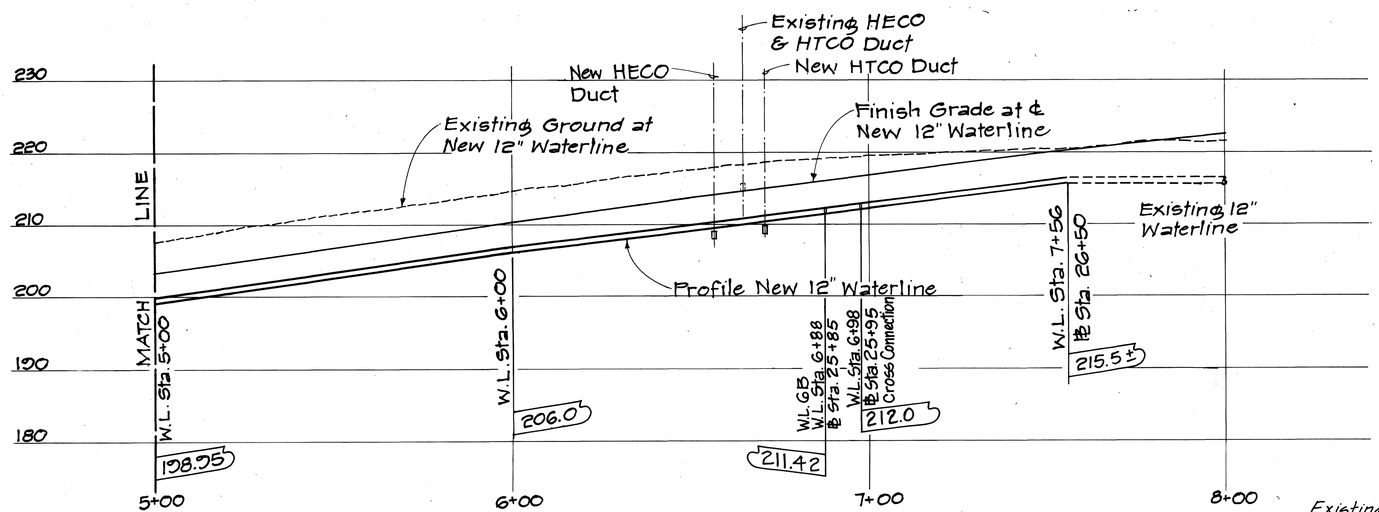

PROFILE - WATERLINE NO. 6

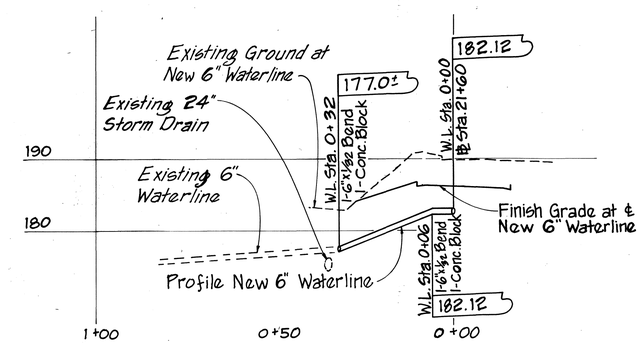

PROFILE - WATERLINE NO. 6A

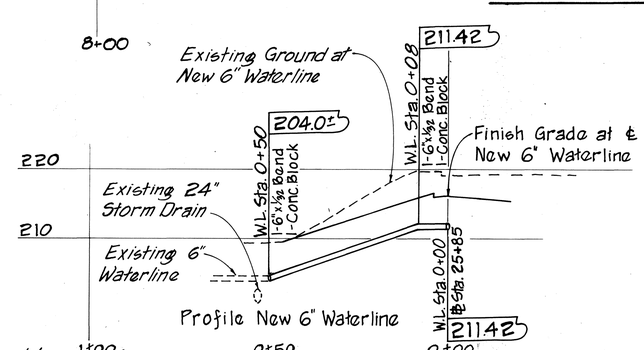

PROFILE - WATERLINE NO. 6B

GRAPHIC SCALES

20 10 0 20 40 HORIZ. SCALE 1" = 20'

10 5 0 10 20 VERT. SCALE 1" = 10'

SCALE IN FEET

DOUGLAS S. KAMIYA
REGISTERED PROFESSIONAL ENGINEER
No. 3706
HAWAII, U.S.A.

THIS WORK WAS PREPARED BY ME OR UNDER MY SUPERVISION.

Douglas S. Kamiya

STATE OF HAWAII
DEPARTMENT OF TRANSPORTATION
LAND TRANSPORTATION FACILITIES DIVISION

UTILITY PROFILES
WATER
KAMEHAMEHA HIGHWAY
IMPROVEMENT
(LIKELIKE HIGHWAY TO KOOLAU VIEW DRIVE)
PROJECT NO. F-083-1(10)

SCALE: AS SHOWN DATE AUG 1978

SHEET No. 14 OF 38 SHEETS

APPROVED

Kathryn S. Matsukawa

CHIEF, PLANNING AND ENGINEERING, B.W.S.
CITY AND COUNTY OF HONOLULU

10/3/78
DATE

ORIGINAL PLAN		DATE
	SURVEY PLOTTED BY	
	DRAWN BY	
	TRACED BY	
NOTE BOOK	DESIGNED BY	
	QUANTITIES BY	
No.	CHECKED BY	

FED. ROAD DIST. NO.	STATE	FED. AID PROJ. NO.	FISCAL YEAR	SHEET NO.	TOTAL SHEETS
HAWAII	HAW.	F-083-1(10)	1978	63	160

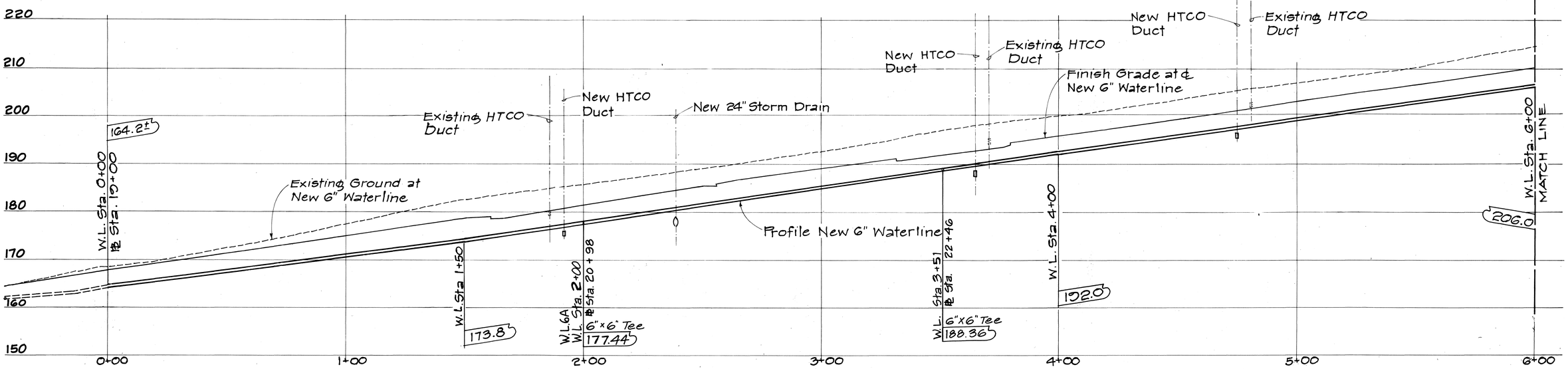

PROFILE – WATERLINE NO. 7

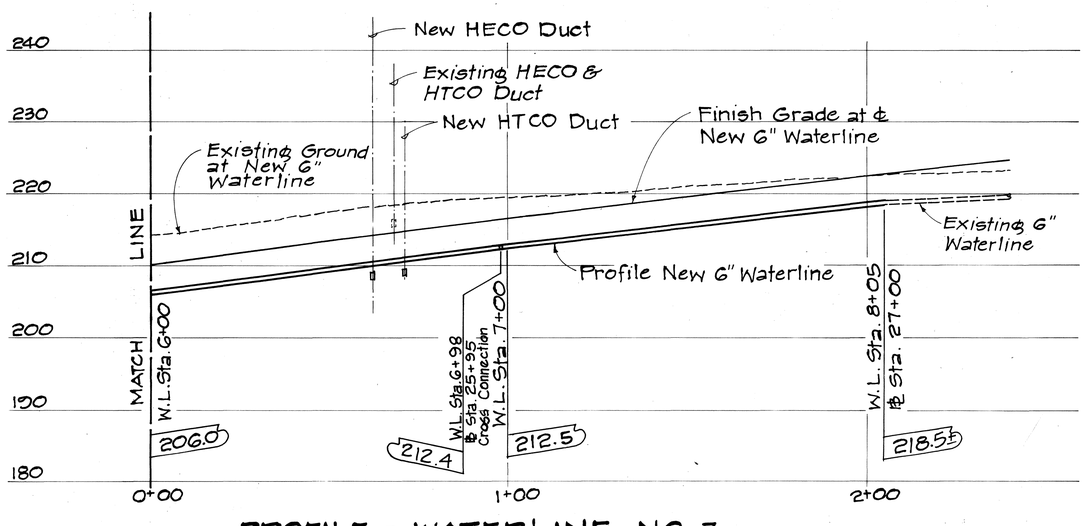

PROFILE – WATERLINE NO. 7

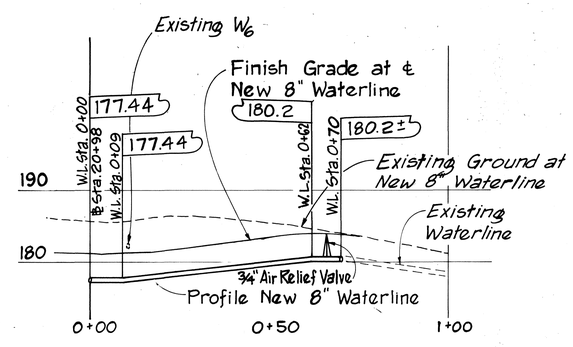

PROFILE – WATERLINE NO. 7A

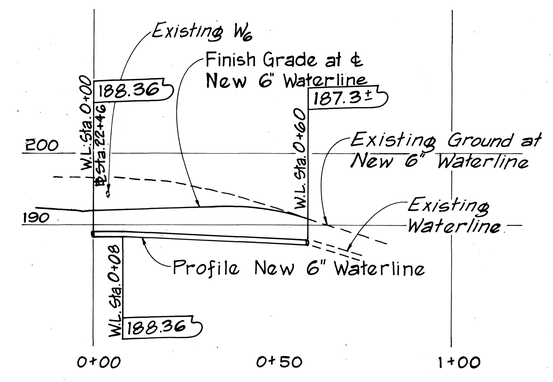

PROFILE – WATERLINE NO. 7B

GRAPHIC SCALES

20 10 0 20 40 — HORIZ. SCALE 1" = 20'

10 5 0 10 20 — VERT. SCALE 1" = 10'

SCALE IN FEET

APPROVED

CHIEF, PLANNING AND ENGINEERING, B.W.S.
CITY AND COUNTY OF HONOLULU

DATE

DOUGLAS S. KAMIYA
REGISTERED PROFESSIONAL ENGINEER
No. 3706
HAWAII, U.S.A.

THIS WORK WAS PREPARED BY ME OR UNDER MY SUPERVISION.

STATE OF HAWAII
DEPARTMENT OF TRANSPORTATION
LAND TRANSPORTATION FACILITIES DIVISION

UTILITY PROFILES
WATER
KAMEHAMEHA HIGHWAY IMPROVEMENT
(LIKELIKE HIGHWAY TO KOOLAU VIEW DRIVE)
PROJECT NO. F-083-1(10)

SCALE : AS SHOWN DATE AUG 1978

SHEET No. 15 OF 38 SHEETS

ORIGINAL PLAN	SURVEY PLOTTED BY	DATE
	DRAWN BY	
	TRACED BY	
NOTE BOOK	DESIGNED BY	
	QUANTITIES BY	
No.	CHECKED BY	

FED. ROAD DIST. NO.	STATE	FED. AID PROJ. NO.	FISCAL YEAR	SHEET NO.	TOTAL SHEETS
HAWAII	HAW.	F-083-1(10)	1978	64	160

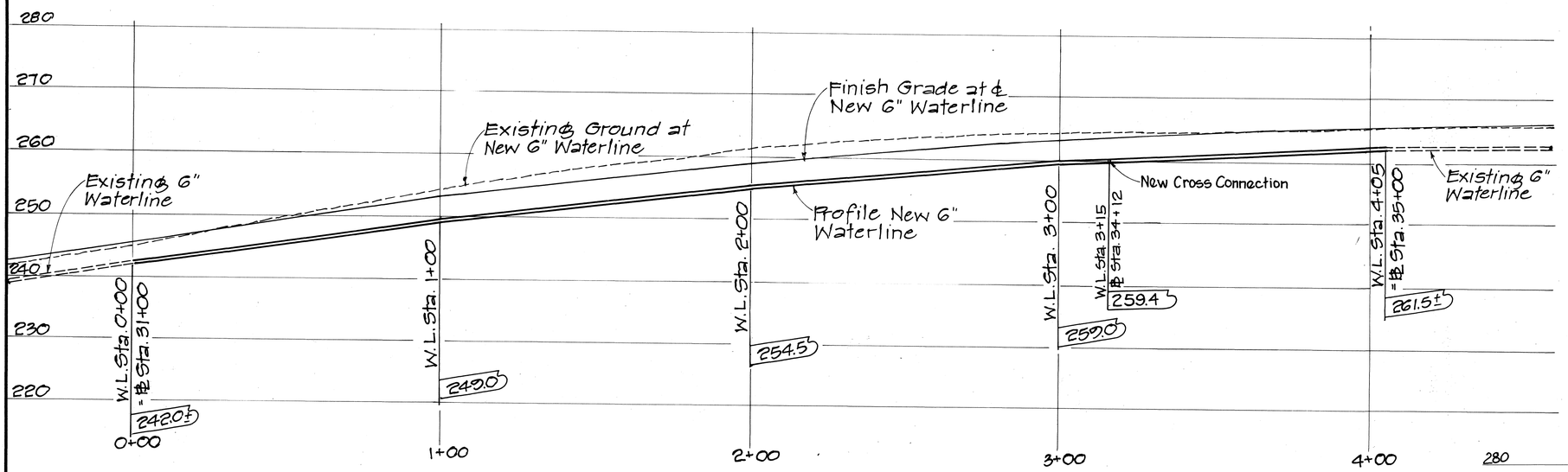

PROFILE - WATERLINE NO. 8

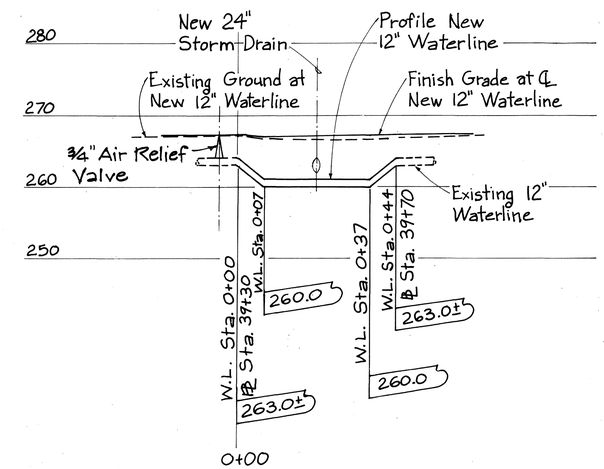

PROFILE - WATERLINE NO. 10

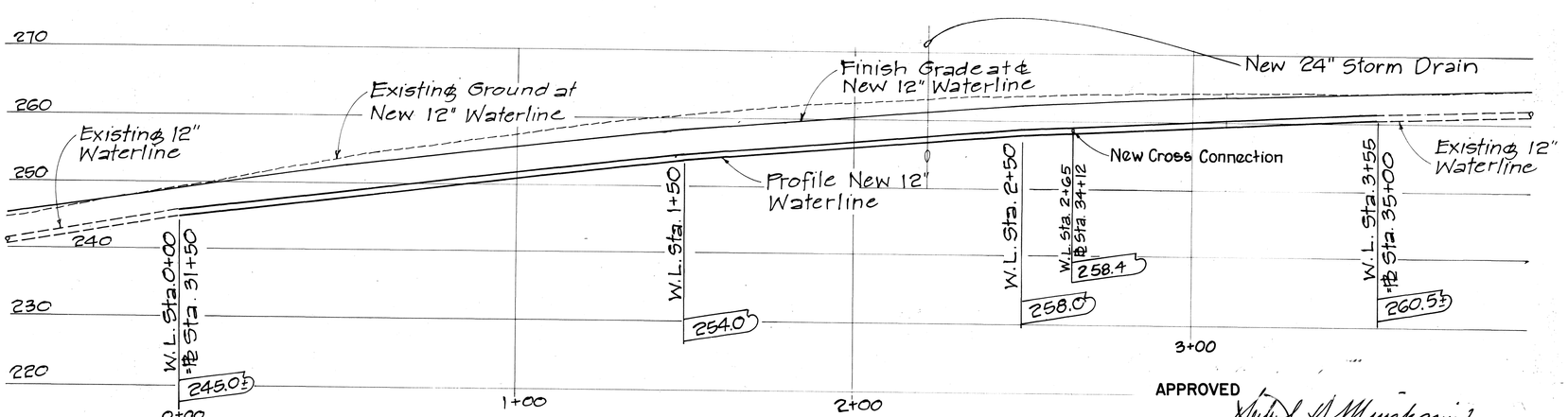

Connection Point moved to Sta. 31+10 C.C.O. #15

PROFILE - WATERLINE NO. 9

GRAPHIC SCALES

20 10 0 20 40 HORIZ. SCALE 1" = 20'

10 5 0 10 20 VERT. SCALE 1" = 10'

SCALE IN FEET

APPROVED

CHIEF, PLANNING AND ENGINEERING, B.W.S.
CITY AND COUNTY OF HONOLULU

10/3/78
DATE

DOUGLAS S. KAMITA REGISTERED PROFESSIONAL ENGINEER No. 3706 HAWAII, U.S.A.

THIS WORK WAS PREPARED BY ME OR UNDER MY SUPERVISION.

STATE OF HAWAII
DEPARTMENT OF TRANSPORTATION
LAND TRANSPORTATION FACILITIES DIVISION

UTILITY PROFILES
WATER
KAMEHAMEHA HIGHWAY IMPROVEMENT
(LIKELIKE HIGHWAY TO KOOLAU VIEW DRIVE)
PROJECT NO. F-083-1(10)

SCALE : AS SHOWN DATE AUG 1978

SHEET No. 16 OF 38 SHEETS

ORIGINAL PLAN | SURVEY PLOTTED BY | DRAWN BY | TRACED BY | DESIGNED BY | QUANTITIES BY | CHECKED BY | DATE | NOTE BOOK No.

64

FED. ROAD DIST. NO.	STATE	FED. AID PROJ. NO.	FISCAL YEAR	SHEET NO.	TOTAL SHEETS
HAWAII	HAW.	F-083-1(10)	1978	65	160

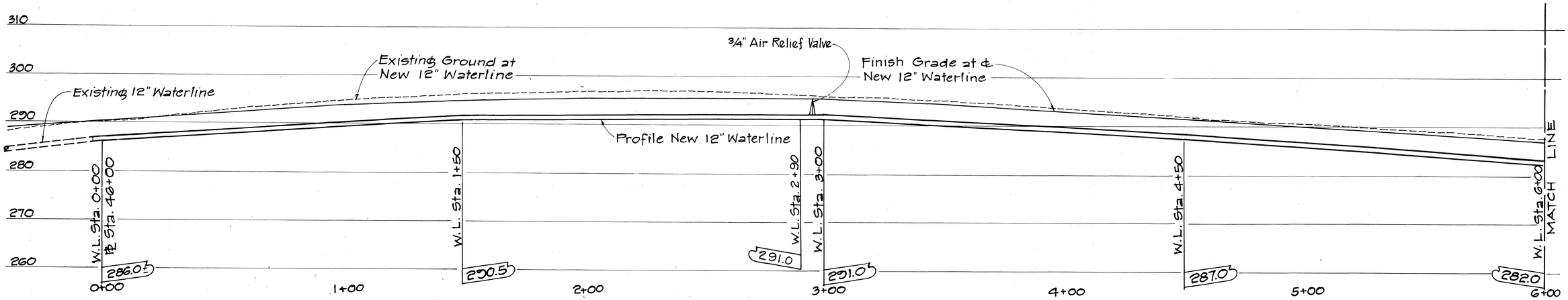

PROFILE - WATERLINE NO. 12

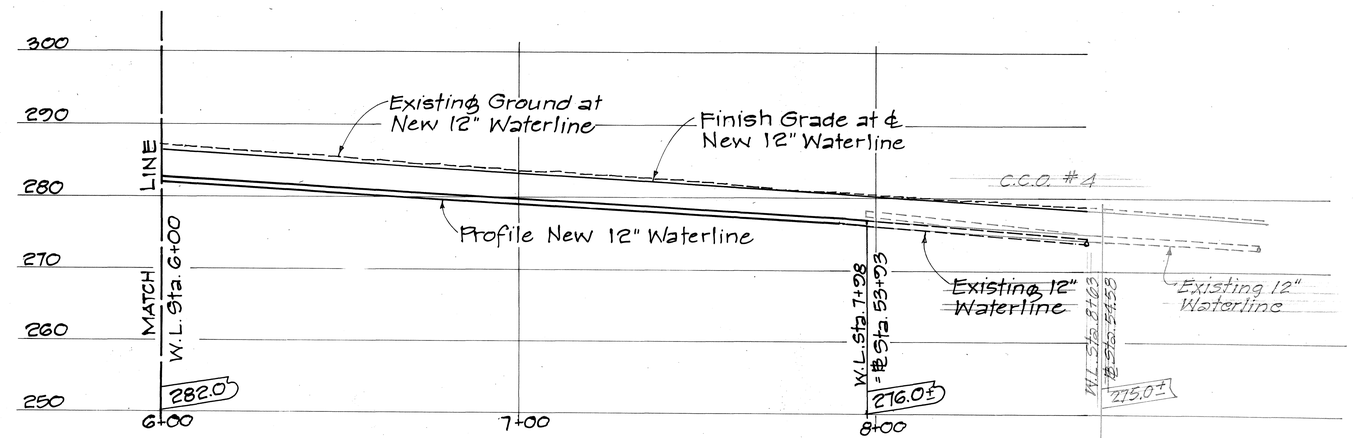

PROFILE - WATERLINE NO. 12

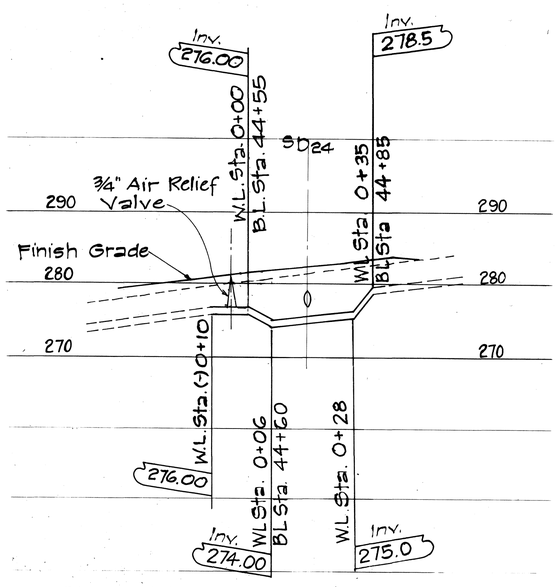

PROFILE - WATERLINE NO. 11

GRAPHIC SCALES

20 10 0 20 40 HORIZ. SCALE 1" = 20'

10 5 0 10 20 VERT. SCALE 1" = 10'

SCALE IN FEET

ORIGINAL PLAN	SURVEY PLOTTED BY	DATE
	TRACED BY	
	DESIGNED BY	
NOTE BOOK	QUANTITIES BY	
No.	CHECKED BY	

APPROVED

CHIEF, PLANNING AND ENGINEERING, B.W.S.
CITY AND COUNTY OF HONOLULU

DATE

DOUGLAS S. KAMIYA
REGISTERED PROFESSIONAL ENGINEER
No. 3706
HAWAII, U.S.A.

THIS WORK WAS PREPARED BY ME OR UNDER MY SUPERVISION.

STATE OF HAWAII
DEPARTMENT OF TRANSPORTATION
LAND TRANSPORTATION FACILITIES DIVISION

UTILITY PROFILES
WATER
KAMEHAMEHA HIGHWAY
IMPROVEMENT
(LIKELIKE HIGHWAY TO KOOLAU VIEW DRIVE)
PROJECT NO. F-083-1(10)

SCALE : AS SHOWN DATE AUG 1978

SHEET No. 17 OF 38 SHEETS

FED. ROAD DIST. NO.	STATE	FED. AID PROJ. NO.	FISCAL YEAR	SHEET NO.	TOTAL SHEETS
HAWAII	HAW.	F-083-1(10)	1978	66	160

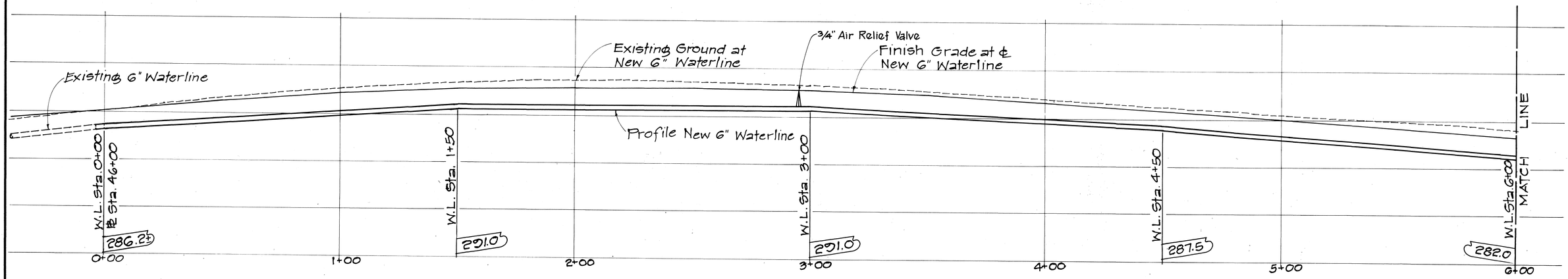

PROFILE - WATERLINE NO. 13

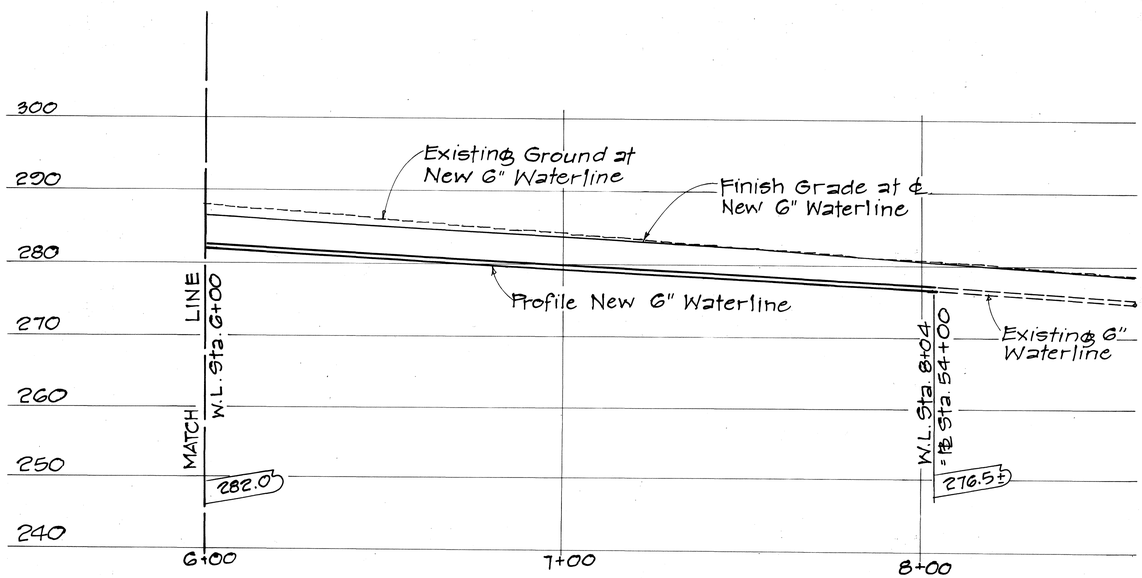

PROFILE - WATERLINE NO. 13

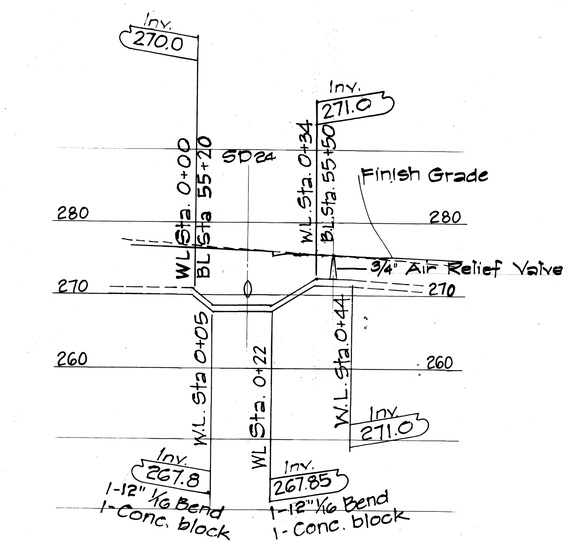

PROFILE - WATERLINE NO. 14

GRAPHIC SCALES

20 10 0 20 40 HORIZ. SCALE 1" = 20'

10 5 0 10 20 VERT. SCALE 1" = 10'

SCALE IN FEET

APPROVED

Stanley S. Minatoya

CHIEF, PLANNING AND ENGINEERING, B.W.S.
CITY AND COUNTY OF HONOLULU

10/3/78
DATE

DOUGLAS S. KANIYA
REGISTERED PROFESSIONAL ENGINEER
No. 3706
HAWAII, U.S.A.

THIS WORK WAS PREPARED BY ME OR UNDER MY SUPERVISION.

Douglas S. Kaniya

STATE OF HAWAII
DEPARTMENT OF TRANSPORTATION
LAND TRANSPORTATION FACILITIES DIVISION

UTILITY PROFILES
WATER
KAMEHAMEHA HIGHWAY
IMPROVEMENT
(LIKELIKE HIGHWAY TO KOOLAU VIEW DRIVE)
PROJECT NO. F - 083 - 1(10)

SCALE : AS SHOWN DATE AUG 1978

SHEET No. 16 OF 38 SHEETS

ORIGINAL PLAN
NOTE BOOK No.
SURVEY PLOTTED BY
DRAWN BY
TRACED BY
DESIGNED BY
QUANTITIES BY
CHECKED BY
DATE

FED. ROAD DIST. NO.	STATE	FED. AID PROJ. NO.	FISCAL YEAR	SHEET NO.	TOTAL SHEETS
HAWAII	HAW.	F-083-1(10)	1978	67	160

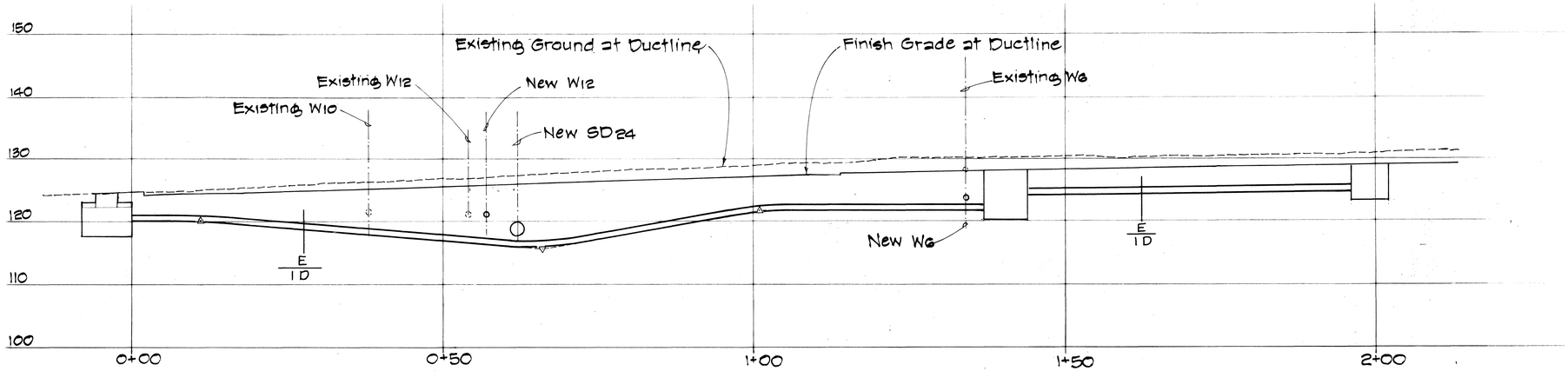

HECO DUCTLINE AT STA. 3+30 TO STA. 5+24

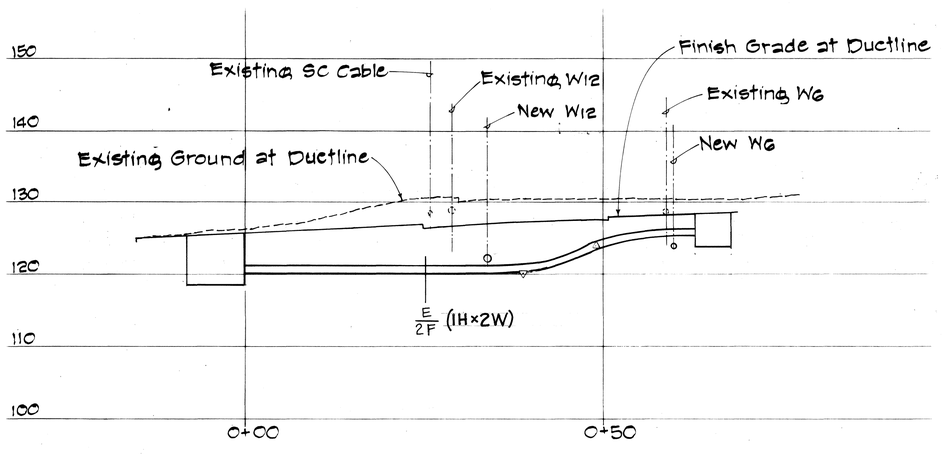

HECO DUCTLINE AT STA. 4+84 TO STA. 4+67

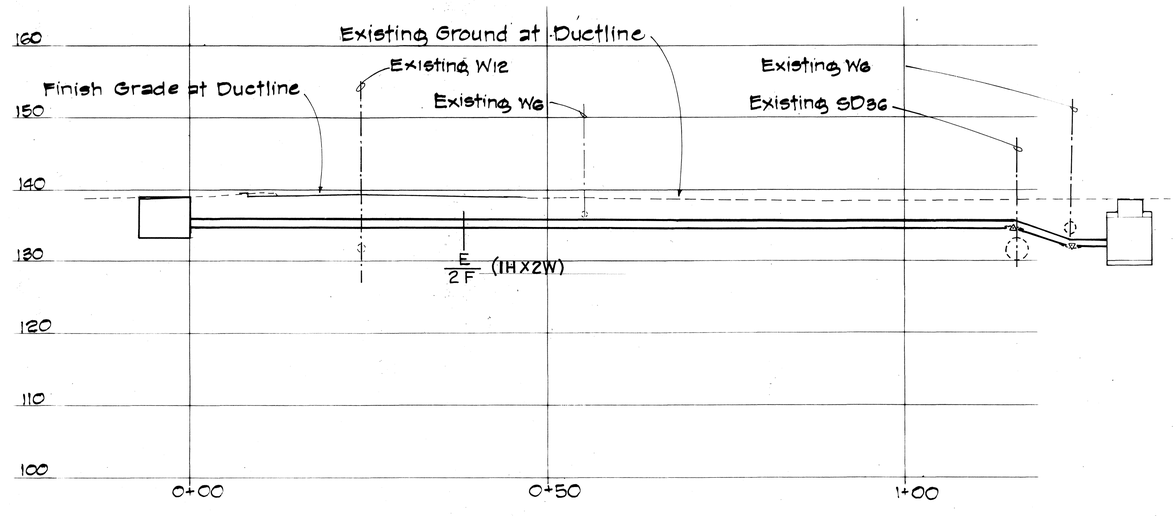

HECO DUCTLINE AT LULUKU ROAD

LEGEND FOR CONDUIT

CONDUIT SIZE	SYMBOL
3"	D
4"	F
5"	H

GRAPHIC SCALES

10' 5' 0 10' 20' HORIZONTAL 1" = 10'

10' 5' 0 10' 20' VERTICAL 1" = 10'

APPROVED
RLG MY
HAWAIIAN ELECTRIC COMPANY

9/14/78
DATE

DOUGLAS S. KAMIYA
REGISTERED PROFESSIONAL ENGINEER
No. 3706
HAWAII, U.S.A.

THIS WORK WAS PREPARED BY ME OR UNDER MY SUPERVISION.
Douglas S. Kamiya

STATE OF HAWAII
DEPARTMENT OF TRANSPORTATION
LAND TRANSPORTATION FACILITIES DIVISION

ELECTRICAL & TELEPHONE PROFILES

KAMEHAMEHA HIGHWAY IMPROVEMENT
(LIKELIKE HIGHWAY TO KOOLAU VIEW DRIVE)
PROJECT NO. F-083-1(10)

SCALE: AS SHOWN DATE AUG 1978

SHEET No. 19 OF 38 SHEETS

ORIGINAL PLAN	SURVEY PLOTTED BY	DATE
	DRAWN BY	
	TRACED BY	
NOTE BOOK	DESIGNED BY	
	QUANTITIES BY	
No.	CHECKED BY	

FED. ROAD DIST. NO.	STATE	FED. AID PROJ. NO.	FISCAL YEAR	SHEET NO.	TOTAL SHEETS
HAWAII	HAW.	F-083-1(10)	1978	68	160

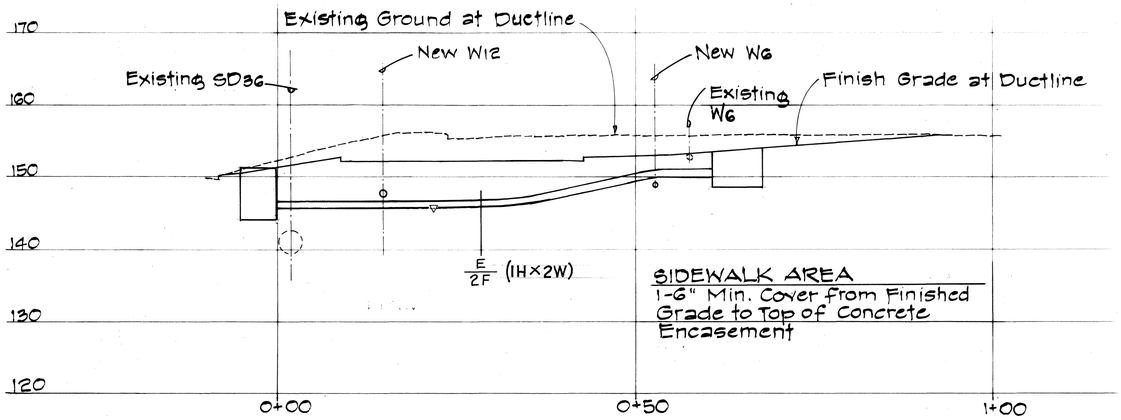

HECO DUCTLINE AT STA. 14+10 TO STA. 14+50

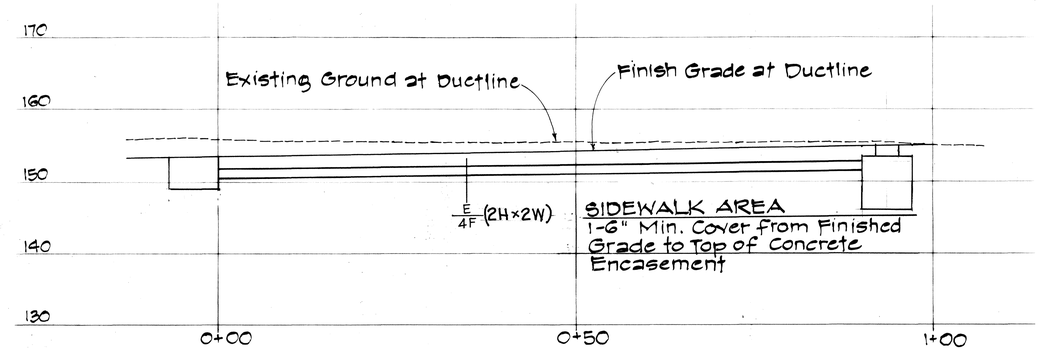

HECO DUCTLINE AT STA. 14+50 TO STA. 15+45

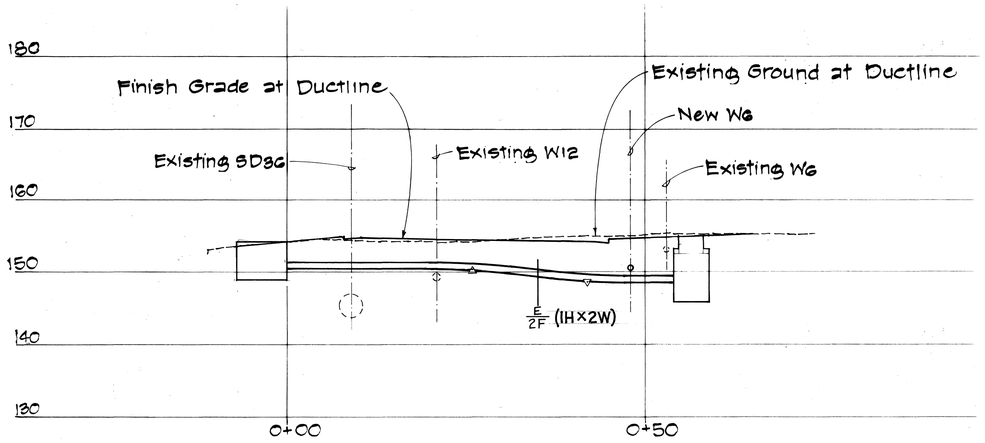

HECO DUCTLINE AT STA. 15+41 TO STA. 15+45

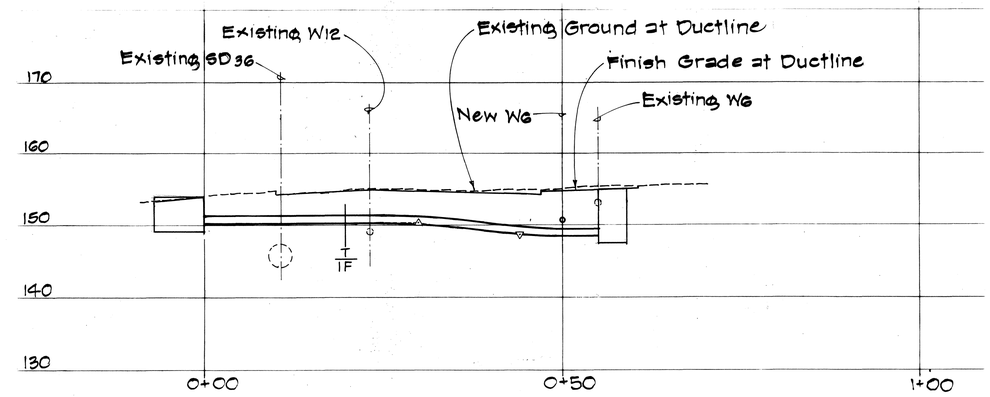

HTCO DUCTLINE AT STA. 15+45 TO STA. 15+49.5

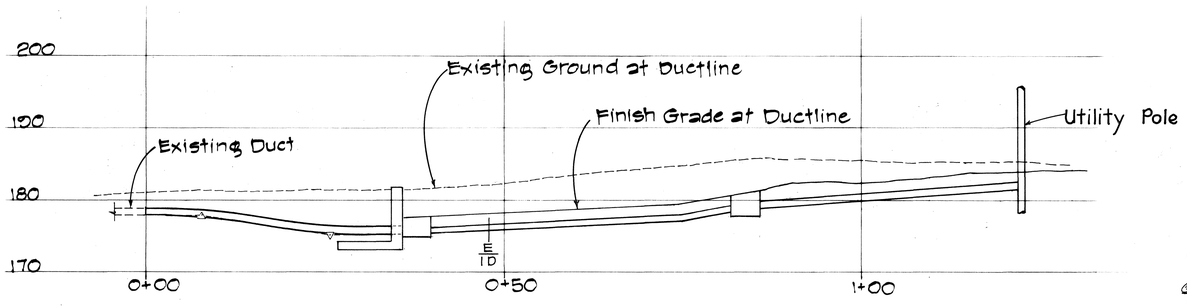

HECO DUCTLINE AT STA. 20+32 TO STA. 20+84

LEGEND FOR CONDUIT

CONDUIT SIZE	SYMBOL
3"	D
4"	F
5"	H

GRAPHIC SCALES

10' 5' 0 10' 20' HORIZONTAL 1" = 10'

10' 5' 0 10' 20' VERTICAL 1" = 10'

APPROVED

ELG 119 [illegible] 9-14-78
HAWAIIAN ELECTRIC COMPANY — DATE

K Yamada 9-8-78
HAWAIIAN TELEPHONE COMPANY — DATE

DOUGLAS S. KANIYA REGISTERED PROFESSIONAL ENGINEER No. 3706 HAWAII, U.S.A.

THIS WORK WAS PREPARED BY ME OR UNDER MY SUPERVISION.

Douglas S. Kaniya

STATE OF HAWAII
DEPARTMENT OF TRANSPORTATION
LAND TRANSPORTATION FACILITIES DIVISION

ELECTRICAL & TELEPHONE PROFILES

KAMEHAMEHA HIGHWAY IMPROVEMENT
(LIKELIKE HIGHWAY TO KOOLAU VIEW DRIVE)
PROJECT NO. F-083-1(10)

SCALE: AS SHOWN DATE AUG 1978

SHEET No. 20 OF 38 SHEETS

ORIGINAL PLAN	SURVEY PLOTTED BY	DATE
	DRAWN BY	
	TRACED BY	
NOTE BOOK	DESIGNED BY	
	QUANTITIES BY	
No.	CHECKED BY	

FED. ROAD DIST. NO.	STATE	FED. AID PROJ. NO.	FISCAL YEAR	SHEET NO.	TOTAL SHEETS
HAWAII	HAW.	F-083-1(10)	1978	69	160

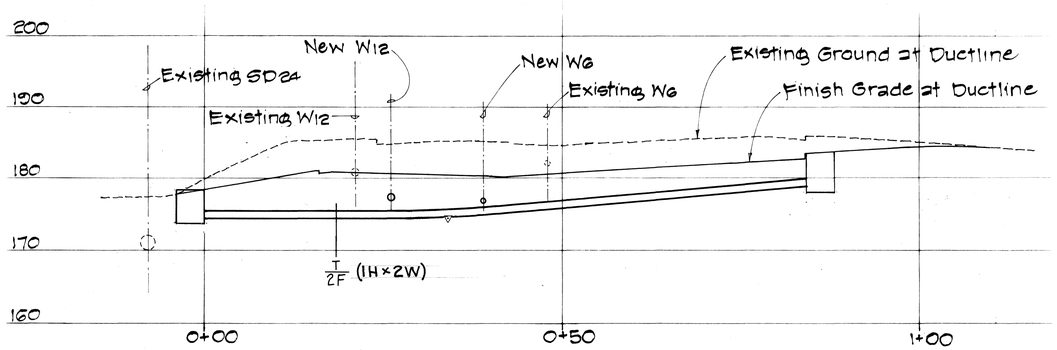

HTCO DUCTLINE AT KUUIPO PLACE

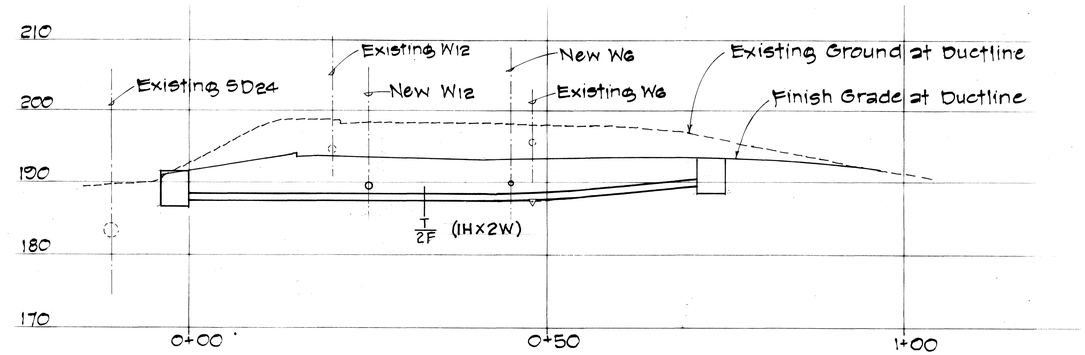

HTCO DUCTLINE AT HUAWAINA PLACE

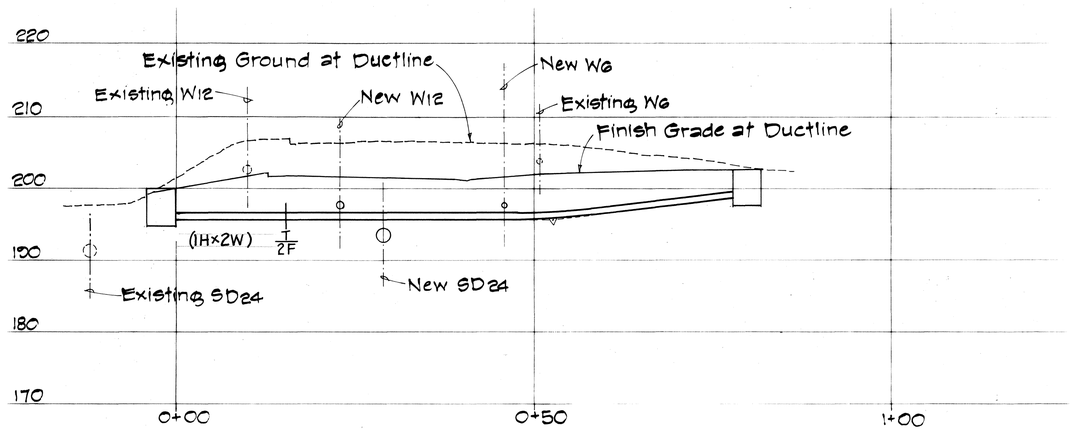

HTCO DUCTLINE AT STA. 23+83 TO STA. 23+68

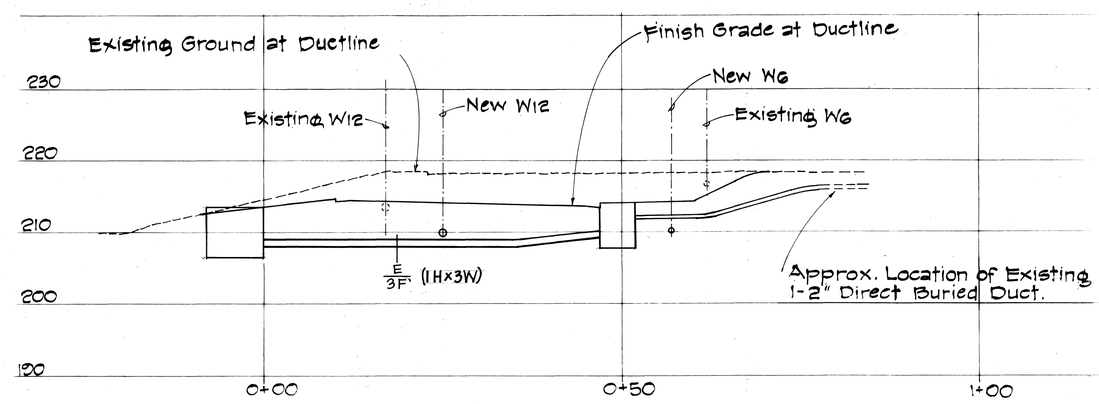

HECO DUCTLINE AT STA. 25+61 TO STA. 25+66

LEGEND FOR CONDUIT

CONDUIT SIZE	SYMBOL
3"	D
4"	F
5"	H

GRAPHIC SCALES

10' 5' 0 10' 20' HORIZONTAL 1" = 10'

10' 5' 0 10' 20' VERTICAL 1" = 10'

APPROVED

HAWAIIAN ELECTRIC COMPANY — DATE 9-14-78

HAWAIIAN TELEPHONE COMPANY — DATE 9-8-78

DOUGLAS S. KAMIYA REGISTERED PROFESSIONAL ENGINEER No. 3706 HAWAII, U.S.A.

THIS WORK WAS PREPARED BY ME OR UNDER MY SUPERVISION.

STATE OF HAWAII
DEPARTMENT OF TRANSPORTATION
LAND TRANSPORTATION FACILITIES DIVISION

ELECTRICAL & TELEPHONE PROFILES

KAMEHAMEHA HIGHWAY IMPROVEMENT
(LIKELIKE HIGHWAY TO KOOLAU VIEW DRIVE)
PROJECT NO. F-083-1(10)

SCALE: AS SHOWN — DATE AUG 1978

SHEET No. 21 OF 38 SHEETS

ORIGINAL PLAN — SURVEY PLOTTED BY / DRAWN BY / TRACED BY / DESIGNED BY / QUANTITIES BY / CHECKED BY — DATE — NOTE BOOK No.

FED. ROAD DIST. NO.	STATE	FED. AID PROJ. NO.	FISCAL YEAR	SHEET NO.	TOTAL SHEETS
HAWAII	HAW.	F-083-1(10)	1978	70	160

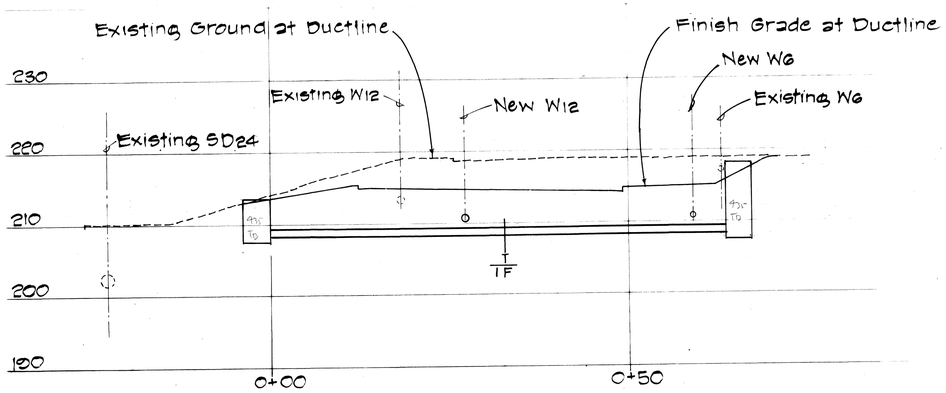

HTCO DUCTLINE AT STA.25+70 TO STA.25+66

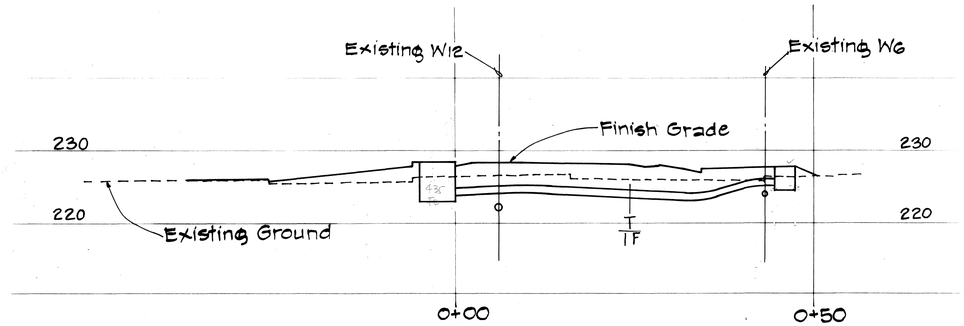

HTCO DUCTLINE AT STA. 28+14

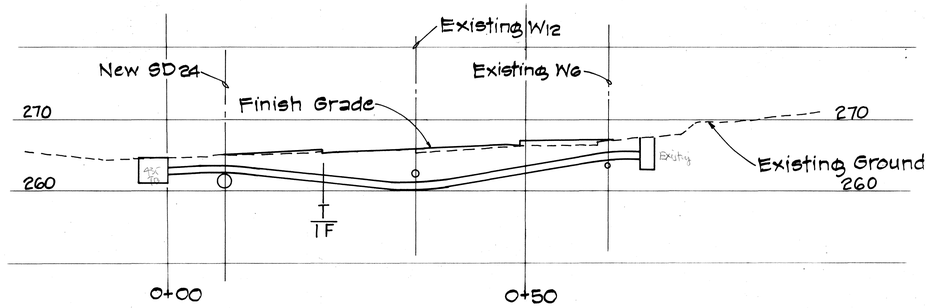

HTCO DUCTLINE AT STA. 37+28 TO STA.37+46

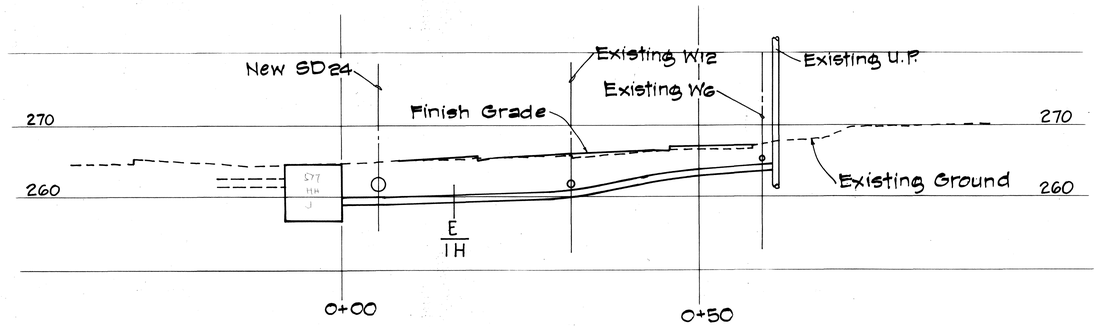

HECO DUCTLINE AT STA.37+32 TO STA.37+50

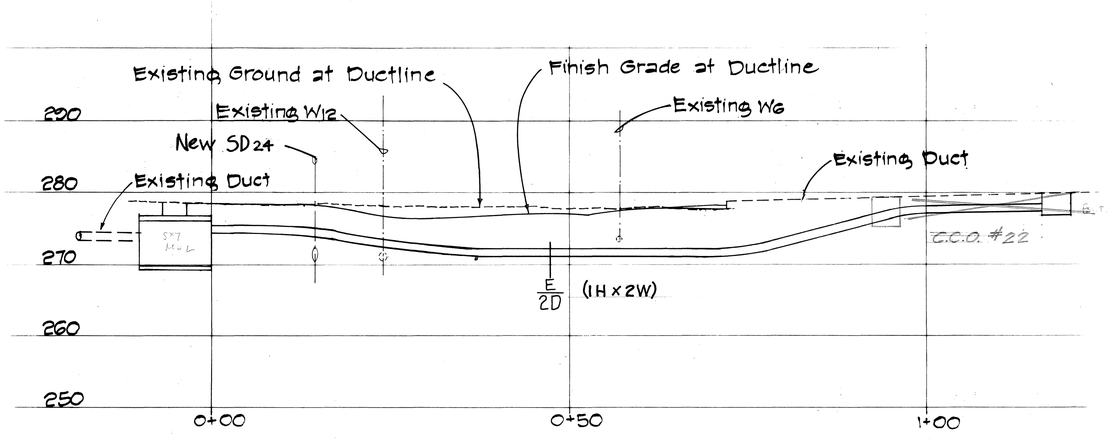

HECO DUCTLINE AT HALEKOU ROAD

LEGEND FOR CONDUIT

CONDUIT SIZE	SYMBOL
3"	D
4"	F
5"	H

GRAPHIC SCALES

10' 5' 0 10' 20' HORIZONTAL 1" = 10'

10' 5' 0 10' 20' VERTICAL 1" = 10'

APPROVED

HAWAIIAN ELECTRIC COMPANY — DATE 9-14-78

HAWAIIAN TELEPHONE COMPANY — DATE 9-8-78

DOUGLAS S. KAMIYA REGISTERED PROFESSIONAL ENGINEER No. 3706 HAWAII, U.S.A.

THIS WORK WAS PREPARED BY ME OR UNDER MY SUPERVISION.

Douglas S. Kamiya

STATE OF HAWAII
DEPARTMENT OF TRANSPORTATION
LAND TRANSPORTATION FACILITIES DIVISION

ELECTRICAL & TELEPHONE PROFILES

KAMEHAMEHA HIGHWAY IMPROVEMENT
(LIKELIKE HIGHWAY TO KOOLAU VIEW DRIVE)
PROJECT NO. F-083-1(10)

SCALE: AS SHOWN — DATE AUG 1978

SHEET No. 22 OF 38 SHEETS

ORIGINAL PLAN — SURVEY PLOTTED BY, DRAWN BY, TRACED BY, DESIGNED BY, QUANTITIES BY, CHECKED BY — DATE — NOTE BOOK No.

FED. ROAD DIST. NO.	STATE	FED. AID PROJ. NO.	FISCAL YEAR	SHEET NO.	TOTAL SHEETS
HAWAII	HAW.	F-083-1(10)	1978	71	160

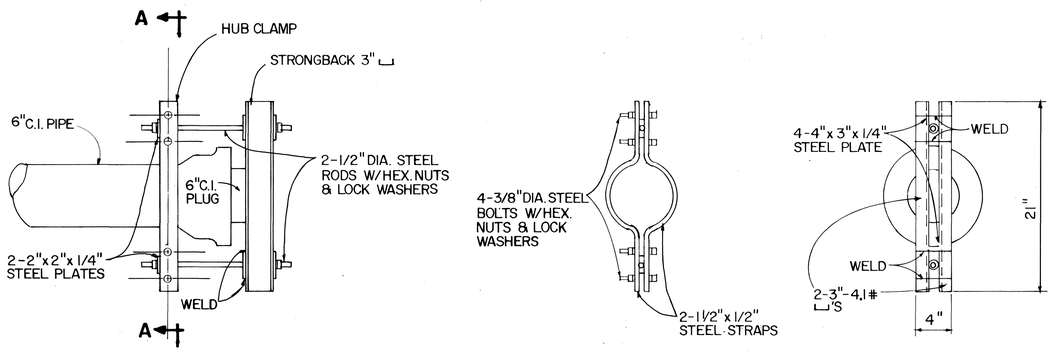

6" - HUB CLAMP & STRONGBACK ASSEMBLY

NOT TO SCALE

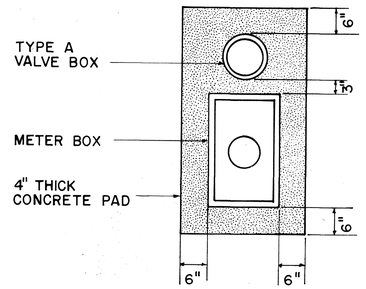

PLAN OF CONCRETE PAD FOR WATER METER IN DIRT AREAS

NOT TO SCALE

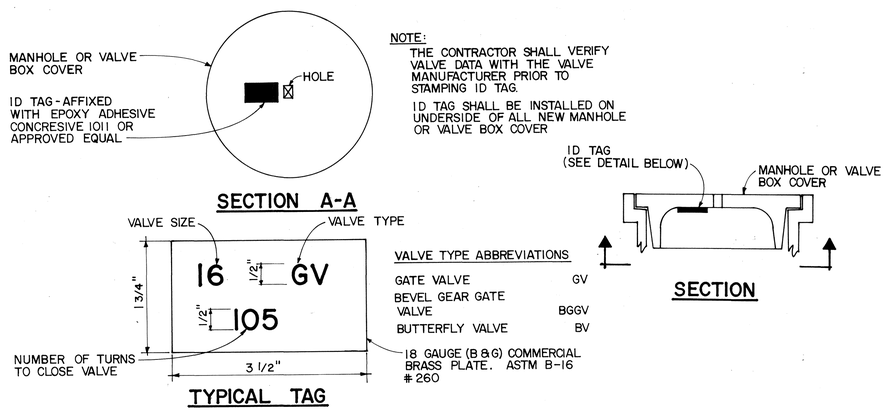

IDENTIFICATION TAG FOR MANHOLE OR VALVE BOX COVER

NOT TO SCALE

ORIGINAL PLAN	SURVEY PLOTTED BY	DATE
	DRAWN BY	
	TRACED BY	
NOTE BOOK	DESIGNED BY	
	QUANTITIES BY	
No.	CHECKED BY	

APPROVED

Stewart S. Minakami 10/3/78

CHIEF, PLANNING AND ENGINEERING, B.W.S. DATE

CITY AND COUNTY OF HONOLULU

DOUGLAS S. KAMIYA REGISTERED PROFESSIONAL ENGINEER No. 3706 HAWAII, U.S.A.

THIS WORK WAS PREPARED BY ME OR UNDER MY SUPERVISION.

Douglas S. Kamiya

STATE OF HAWAII
DEPARTMENT OF TRANSPORTATION
LAND TRANSPORTATION FACILITIES DIVISION

WATERLINE DETAILS

KAMEHAMEHA HIGHWAY IMPROVEMENT
(LIKELIKE HIGHWAY TO KOOLAU VIEW DRIVE)
PROJECT NO. F - 083 - 1 (10)

SCALE AS SHOWN DATE AUG 1978

SHEET No. 23 OF 38 SHEETS

FED. ROAD DIST. NO.	STATE	FED. AID PROJ. NO.	FISCAL YEAR	SHEET NO.	TOTAL SHEETS
HAWAII	HAW.	F-083-1(10)	1978	72	160

FITTINGS AND APPURTENANCES SCHEDULE

PROVIDE FOLLOWING WATER LINE AND FIRE HYDRANT FITTINGS AND APPURTENANCES AT THE STATIONS SHOWN IN THE SCHEDULE BELOW:

WATER LINE NO.	STATION RELOCATED	OFFSET LEFT WATER	OFFSET RIGHT LINES	6" 1/4 BEND	12" 1/8 BEND	8" 1/8 BEND	6" 1/8 BEND	12" 1/16 BEND	6" 1/16 BEND	12" 1/32 BEND	12 x 8 TEE	12 x 6 TEE	6 x 6 TEE	12x6 TAPPING SLEEVE	8x6 REDUCER, SEB	8x6 REDUCER, LEB	6 x 6 CROSS	12" SLEEVE 12" LONG	8" SLEEVE	6" SLEEVE	12" D.I. PIPE, CL. 52 (L.F.)	8" D.I. PIPE, CL. 52 (L.F.)	6" D.I. PIPE, CL. 52 (L.F.)	12" GATE VALVE, 250#	8" GATE VALVE, 250#	6" GATE VALVE, 250#	6" GATE VALVE, (RELOCATE)	6" TAPPING VALVE	FIRE HYDRANT (RELOCATE)	FIRE HYDRANT h = 7± FT.	3/4" AIR RELIEF VALVE (W.P. PSI)	CONC. BLOCK	CONC. BLOCK W/ STRUCTURAL STRUT	CONC. BLOCK W/ STRAPS	VALVE BOX	AIR VALVE BOX	TEMP. CLEANOUT W/M.J. CAP AND CONCRETE BLOCK
1	1+84		2				1													1			8								206			1		1	1
	2+30	1					1													1			8											1				1
2	3+86		13		1													1			8												1				1
	7+58		1							1								1			8										202			1		1	
3	4+00		24				1													1			8										1				1
	6+00		18				1													1			8								202		1			1	1
4	11+72	9								1								1			8											1					1
	15+00	11																1			8										195					1	1
5	12+00		23				1													1			8										1				1
	15+90		21				1													1			8										1				1
6	19+00	7			1													1			8												1				1
	26+50	17			1													1			8												1				1
6A	21+60	5										1												2		1						1				3		
	21+50	32					1													1			8										1				1
6B	25+85	9										1												2		1						1				3		
	25+65	54					1													1			8										1				1
7	19+00		19				1													1			8										1				1
	27+00		28				1													1			8										1				1
7A	20+98		10										1			1										3						1				3		
	20+92		79			1													1			8								180			1			1	1
7B	22+46	16											1													3						1				3		1
	22+42	75					1													1			8										1				1
8	31+00		27				1													1			8										1				1
	35+00		26				1													1			8										1				1
9	31+50	0			1													1			8												1				1
	35+00	0			1													1			8												1				1
10	39+30	3			1													1			8										142			1		1	1
	39+70	3			1													1			8													1			1
11	44+55		2.5		1													1			8										136			1		1	1
	44+88		3		1													1			8													1				1
12	46+00	3.5			1													1			8												1				1
	53+93	6																1			8																1
13	46+00		31				1													1			8										1				1
	54+00		20				1													1			8										1				1
14	55+20	15			1													1			8													1				1
	55+50	6						1										1			8										140			1		1	1
	CROSS CONNECTION																																					
	13 + 50	12									1											30		2	1							1				3		
	13 + 50		17	1												1		1					12			3			1			3				3		
	25+95	9									1											26		1	1						1					2		
	25+95		20	1												1		1					14			3			1			3				3		
	34+12		6								1											16		1	1						1					2		
	34+12		21	1												1		1					12			2			1			3				2		
	FIRE HYDRANT CONNECTION																																					
	2+43		36	1																			12				1		1			2				1		
	4+33		26									1											30			1				1		2				1		
	6+58		26									1											25				1		1			2				1		
	8+77		25											1									31					1		1		2				1		1
	10+68		25											1									32					1		1		2				1		1
	16+15		25											1									32					1		1		2				1		1
	18+06		26											1									33					1	1			2				1		1
	22+20		24									1											29			1				1		2				1		
	30+97		26									1											26			1				1		2				1		
	37+70		26											1									27					1		1		2				1		1
	40+90		26											1									26					1	1			2				1		1
	44+25		26											1									23					1		1		2				1		1
	47+85		26									1											20			1			1			2				1		
	51+45		26									1											22			1				1		2				1		

SURVEY PLOTTED BY	
DRAWN BY	
TRACED BY	
DESIGNED BY	
QUANTITIES BY	
CHECKED BY	
DATE	

ORIGINAL PLAN

NOTE BOOK No.

DOUGLAS S. KAMIYA REGISTERED PROFESSIONAL ENGINEER No. 3706 HAWAII, U.S.A.

THIS WORK WAS PREPARED BY ME OR UNDER MY SUPERVISION.

STATE OF HAWAII
DEPARTMENT OF TRANSPORTATION
LAND TRANSPORTATION FACILITIES DIVISION

FITTINGS AND APPURTENANCES SCHEDULE

KAMEHAMEHA HIGHWAY IMPROVEMENT
(LIKELIKE HIGHWAY TO KOOLAU VIEW DRIVE)
PROJECT NO. F-083-1(10)

SCALE DATE AUG 1978

SHEET No. 24 OF 38 SHEETS

FED. ROAD DIST. NO.	STATE	FED. AID PROJ. NO.	FISCAL YEAR	SHEET NO.	TOTAL SHEETS
HAWAII	HAW.	F-083-1(10)	1978	73	160

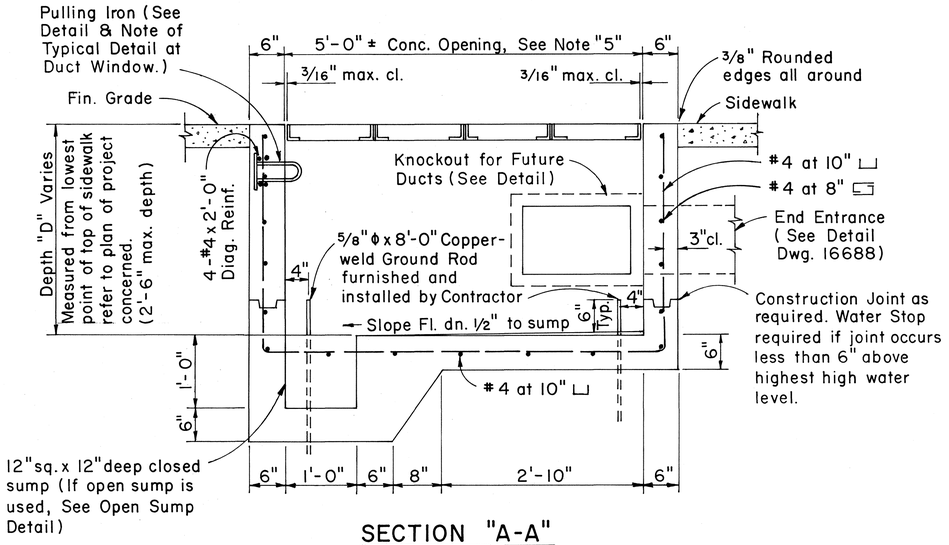

SECTION "A-A"

Scale: 1" = 1'-0"

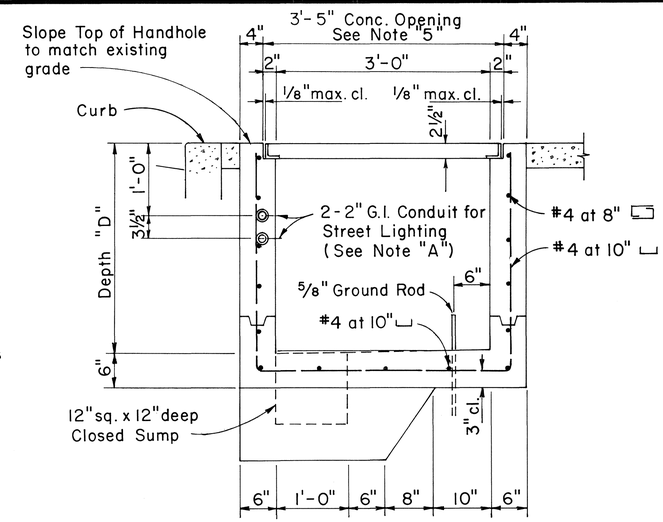

SECTION "B-B"

Scale: 1" = 1'-0"

NOTES:

1. FOR GENERAL NOTES AND MISCELLANEOUS HANDHOLE DETAILS, SEE DWG. 16688 (2 SHEETS).
2. FOR DUCT ENTRANCES, DEPTH AND LOCATIONS OF PULLING IRONS, SEE HANDHOLE DEVELOPMENTS OF PROJECT CONCERNED.
3. SEE PROJECT DRAWINGS FOR LOCATION OF HANDHOLE CONCERNED.
4. TOP OF HANDHOLE SHALL MATCH NEW AND OR EXISTING GRADES UNLESS OTHERWISE SHOWN OR NOTED ON PLANS OF PROJECT CONCERNED.
5. MAXIMUM CLEARANCE BETWEEN REMOVABLE COVERS AND CONCRETE OPENING AT THE SUPPORTS MUST BE KEPT. CONCRETE CONTRACTOR SHALL MEASURE COVER SLAB STEEL FRAME AFTER FABRICATION TO OBTAIN PROPER CLEARANCES. ANY VARIATION IN CLEARANCES SHALL BE CORRECTED TO THE SATISFACTION OF THE ENGINEER AT CONTRACTOR'S EXPENSE.

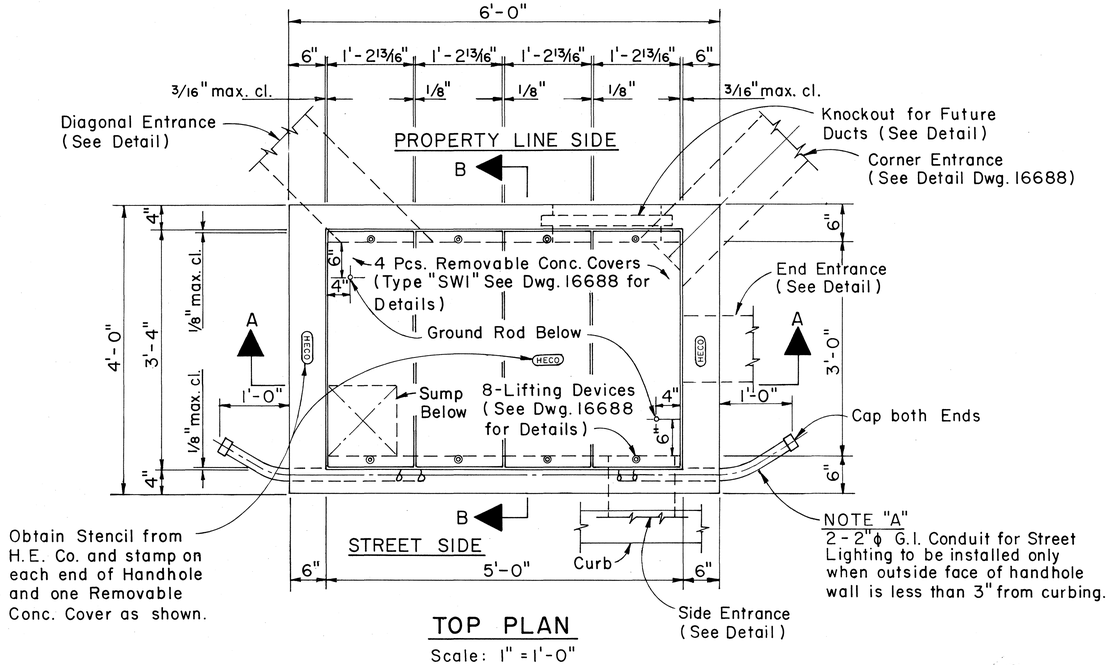

TOP PLAN

Scale: 1" = 1'-0"

MATERIAL QUANTITIES

QUANTITY OF MATERIALS FOR DEPTH "D" = 2'-6" max.

Total concrete	= 2.05 cu. yds.
Total reinf. steel	= 300 lbs.
Total misc. steel	= 157 lbs.

WEIGHT PER REMOVABLE CONCRETE COVER

Concrete	= 118 lbs.
Reinf. steel	= 4 lbs.
Misc. steel	= 37 lbs.
Total	159 lbs.

MATERIALS FOR 6" DEPTH OF 6" THICK WALL,

Concrete	= 0.17 cu. yds.
Reinf. steel	= 19 lbs.

FOR USE IN AREAS NOT SUBJECT TO VEHICULAR TRAFFIC.

APPROVED:

9-14-78

HAWAIIAN ELECTRIC Co., Inc. DATE

HECo., Inc. Drawing Number

18841

SHEET No. 1 OF 1 SHEET

STATE OF HAWAII
DEPARTMENT OF TRANSPORTATION
LAND TRANSPORTATION FACILITIES DIVISION

STANDARD DETAILS

HANDHOLE TYPE 35 (3'-0" x 5'-0") UNDERGROUND STANDARDS

SCALE: AS NOTED AUG 1978

SHEET No. 25 OF 38 SHEETS

ORIGINAL PLAN | SURVEY PLOTTED BY | DRAWN BY | TRACED BY | DESIGNED BY | QUANTITIES BY | CHECKED BY | DATE | NOTE BOOK No.

FED. ROAD DIST. NO.	STATE	FED. AID PROJ. NO.	FISCAL YEAR	SHEET NO.	TOTAL SHEETS
HAWAII	HAW.	~~F 089-1(10)~~	~~1978~~	~~73 S-1~~	160

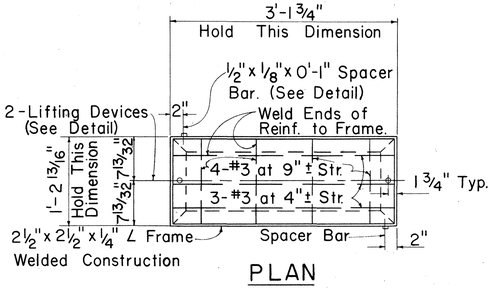

PLAN

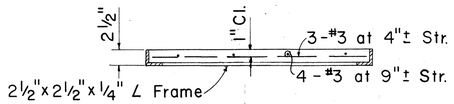

SECTION

REMOVABLE CONCRETE SLAB

1" = 1'-0"

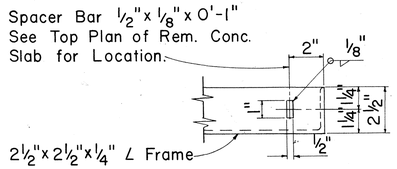

PART ELEVATION

SPACER BAR DETAIL

3" = 1'-0"

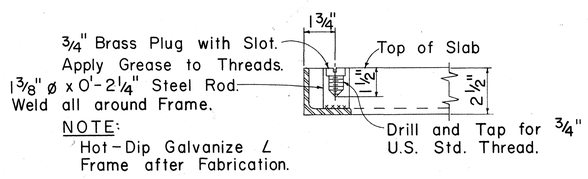

NOTE:
Hot-Dip Galvanize ∠ Frame after Fabrication.

LIFTING DEVICE DETAIL

3" = 1'-0"

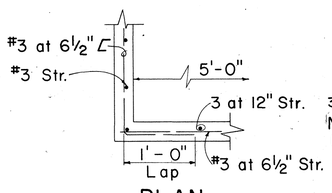

PLAN

CORNER REINF.

TYPICAL
1" = 1'-0"

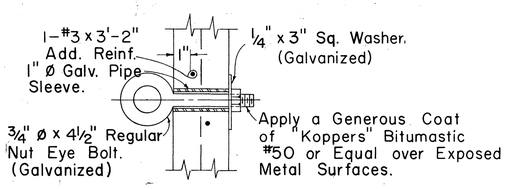

PULLING EYE DETAIL

3" = 1'-0"

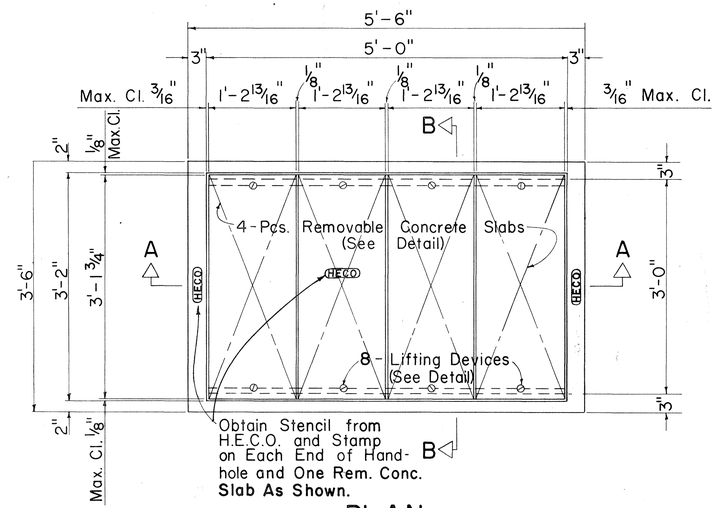

PLAN

1" = 1'-0"

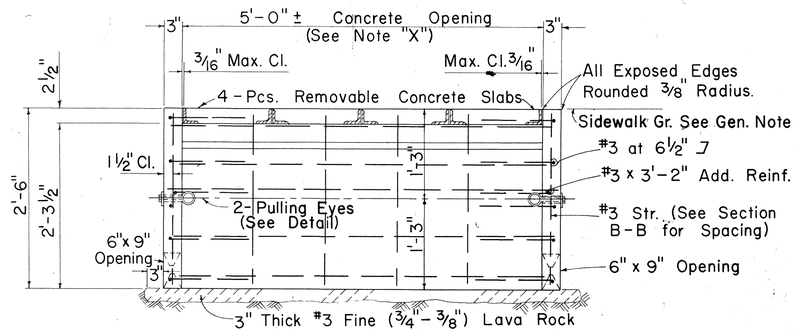

SECTION A-A

1" = 1'-0"

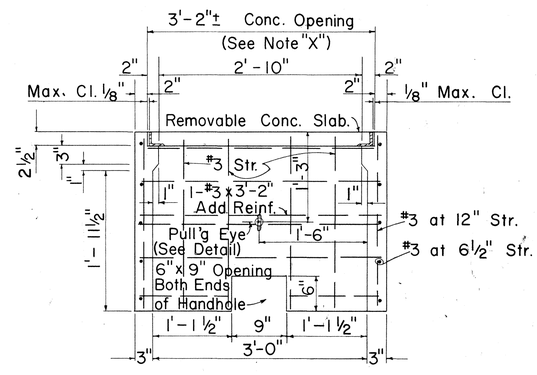

SECTION B-B

1" = 1'-0"

GENERAL NOTES

HANDHOLE FABRICATION

1. CONCRETE STRENGTH:
   Concrete to develop compressive cylinder strength of 3,000 psi. in 28 days.
2. CONCRETE FINISH:
   Top of handhole wood floated (sidewalk finish) according to Division of Highways, State of Hawaii or Division of Engineering, City & County of Honolulu specification whichever governs unless otherwise directed. Round all exposed edges to 3/8" radius.
3. REINFORCING:
   Round deformed bars, new billet stock, intermediate grade ASTM A15.
4. FINISH STEEL WORK:
   Angle iron frames, lifting devices for removable concrete slabs and pulling eye attachments shall be Hot-Dip Galvanized After Fabrication.
5. All materials shall be new and manufactured in the United States of America.

HANDHOLD INSTALLATION

6. EXCAVATION:
   Excavate for handhole to accurate alignment, grades and dimensions as shown on drawings. All excavation must be approved by the Engineering Dept., Hawaiian Electric Co. Inc. before installing precast handhole.
7. INSTALLATION:
   Place handhole on 3" thick #3 fine lava rock. Top of handhole to be level and 1" above finished grade except in sidewalk areas where top is to match top of sidewalk.
8. BACKFILL:
   Remove all debris before backfilling. Backfill in accordance with latest specifications of and subject to approval of Division of Highways, State of Hawaii or Division of Engineering, City & County of Honolulu whichever governs unless otherwise directed.

WEIGHT PER REMOVABLE COVER

Reinf. & Angle Frames	=	38.0 Lb.
Concrete	=	115.0 Lb.
Total	=	153.0 Lb.

WEIGHT OF MATERIAL PER UNIT (EXCLUDING COVERS)

Concrete	=	1,675 Lb.	(.42 cu. yd.)
Reinf. Steel	=	59 Lb.	(157 L.F. of #3)
Total	=	1,734 Lb.	

NOTE "X" — IMPORTANT

Maximum clearances between removable concrete cover slabs and concrete opening at the supports must be kept. Concrete Contractor shall measure cover slab steel frame after fabrication to obtain proper clearances. Any variation in clearances shall be corrected to the satisfaction of the Engineer at Contractors expense.

FOR USE IN AREAS NOT SUBJECT TO VEHICULAR TRAFFIC.

APPROVED:

HAWAIIAN ELECTRIC Co., Inc. DATE

DD-630.010

HECo., Inc. Drawing Number

15501

STATE OF HAWAII
DEPARTMENT OF TRANSPORTATION
HIGHWAYS DIVISION

STANDARD DETAILS

PRECAST HANDHOLE (3'-0" x 5'-0")
UNDERGROUND STANDARDS

Scales: As Noted Date:

SHEET No. OF SHEETS
73 S-1

ORIGINAL PLAN		DATE
	SURVEY PLOTTED BY	"
	DRAWN BY	"
	TRACED BY	"
	DESIGNED BY	"
NOTE BOOK	QUANTITIES BY	"
No.	CHECKED BY	"

FED. ROAD DIST. NO.	STATE	FED. AID PROJ. NO.	FISCAL YEAR	SHEET NO.	TOTAL SHEETS
HAWAII	HAW.	F-083-1(10)	1978	74	160

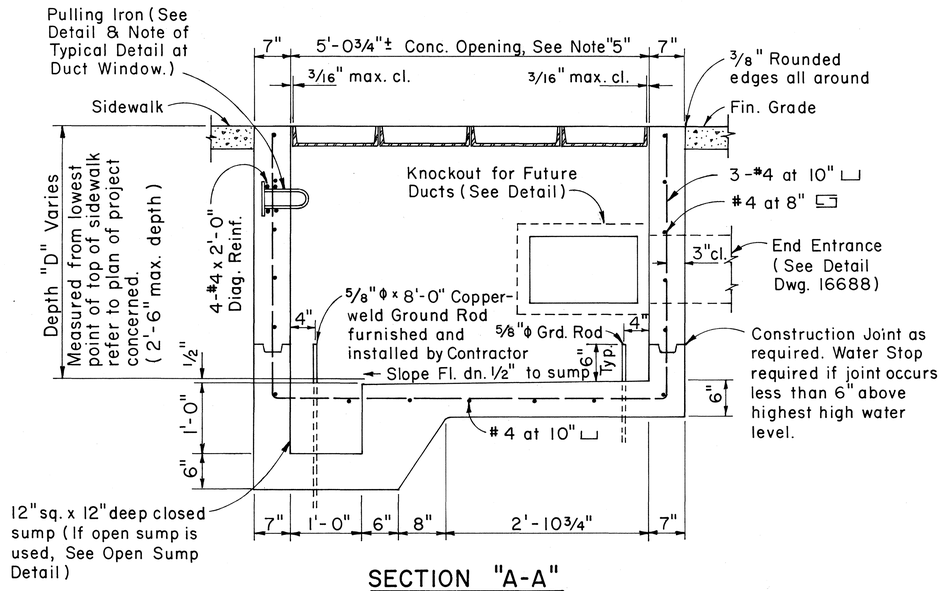

SECTION "A-A"

Scale: 1" = 1'-0"

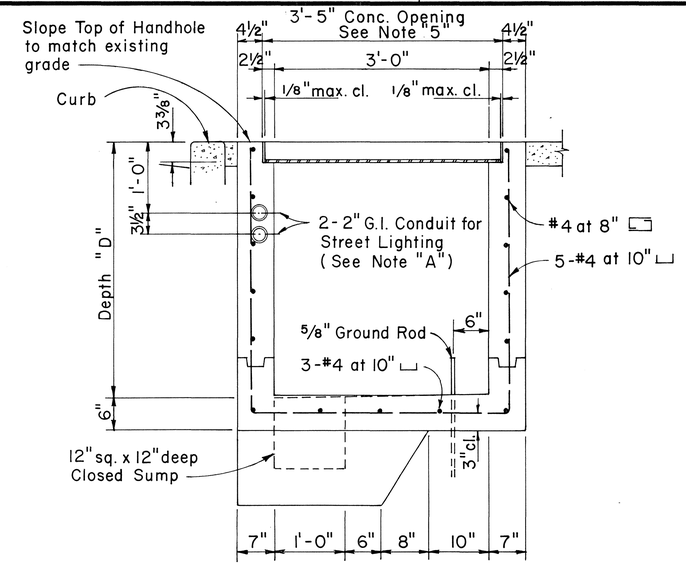

SECTION "B-B"

Scale: 1" = 1'-0"

NOTES:

1. FOR GENERAL NOTES AND MISCELLANEOUS HANDHOLE DETAILS, SEE DWG. 16688 (2 SHEETS).
2. FOR DUCT ENTRANCES, DEPTH AND LOCATIONS OF PULLING IRONS, SEE HANDHOLE DEVELOPMENTS OF PROJECT CONCERNED.
3. SEE PROJECT DRAWINGS FOR LOCATION OF HANDHOLE CONCERNED.
4. TOP OF HANDHOLE SHALL MATCH NEW AND OR EXISTING GRADES UNLESS OTHERWISE SHOWN OR NOTED ON PLANS OF PROJECT CONCERNED.
5. MAXIMUM CLEARANCE BETWEEN REMOVABLE COVERS AND CONCRETE OPENING AT THE SUPPORTS MUST BE KEPT. CONCRETE CONTRACTOR SHALL MEASURE COVER SLAB STEEL FRAME AFTER FABRICATION TO OBTAIN PROPER CLEARANCES. ANY VARIATION IN CLEARANCES SHALL BE CORRECTED TO THE SATISFACTION OF THE ENGINEER AT CONTRACTOR'S EXPENSE.

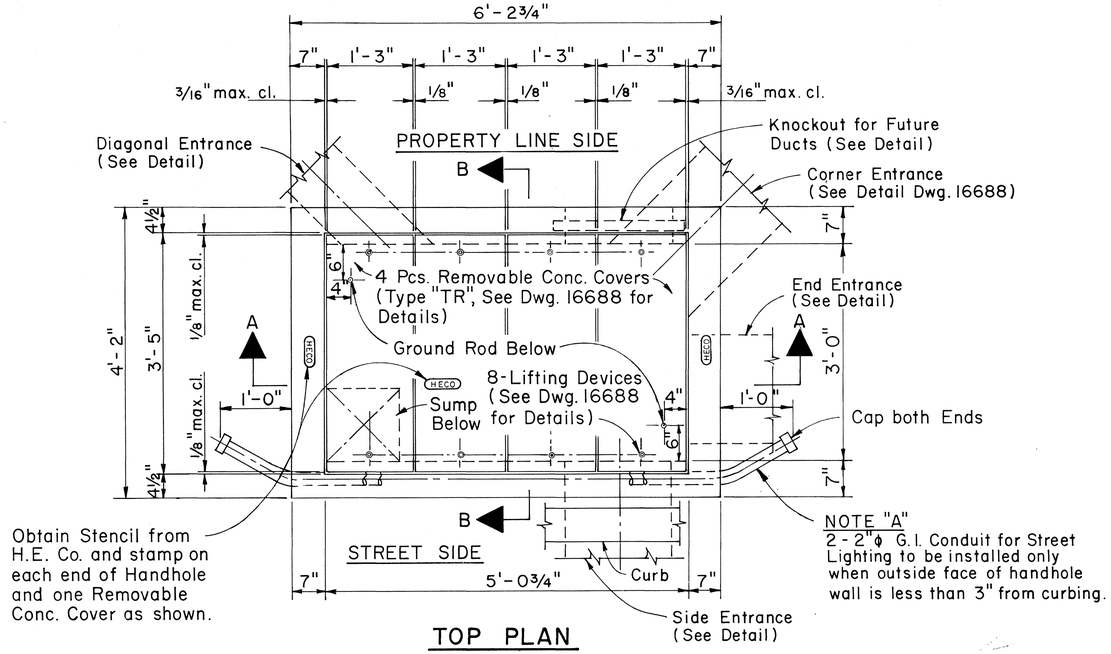

TOP PLAN

Scale: 1" = 1'-0"

MATERIAL QUANTITIES

QUANTITY OF MATERIALS FOR DEPTH "D" = 2'-6" max.

Total concrete	= 2.42 cu. yds.
Total reinf. steel	= 305 lbs.
Total misc. steel	= 471 lbs.

WEIGHT PER REMOVABLE CONCRETE COVER

Concrete	= 141 lbs.
Reinf. steel	= 6 lbs.
Misc. steel	= 115 lbs.
Total	262 lbs.

MATERIALS FOR 6" DEPTH OF 7" THICK WALL,

Concrete	= 20 cu. yds.
Reinf. steel	= 20 lbs.

FOR USE IN AREAS SUBJECT TO LIGHT VEHICULAR TRAFFIC.

APPROVED:

MD CLG Wilkison 9-14-78

HAWAIIAN ELECTRIC Co., Inc. DATE

HECo., Inc. Drawing Number	
18841	SHEET No. 1 OF 1 SHEET

STATE OF HAWAII
DEPARTMENT OF TRANSPORTATION
LAND TRANSPORTATION FACILITIES DIVISION

STANDARD DETAILS

HANDHOLE TYPE 35V (3'-0" x 5'-0")
UNDERGROUND STANDARDS

SCALE: AS NOTED AUG 1978

SHEET No. 26 OF 38 SHEETS

ORIGINAL PLAN	SURVEY PLOTTED BY	DATE
	DRAWN BY	"
	TRACED BY	"
NOTE BOOK	DESIGNED BY	"
No.	QUANTITIES BY	"
	CHECKED BY	"

FED. ROAD DIST. NO.	STATE	FED. AID PROJ. NO.	FISCAL YEAR	SHEET NO.	TOTAL SHEETS
HAWAII	HAWAII	F-083-1(10)	1978	75	160

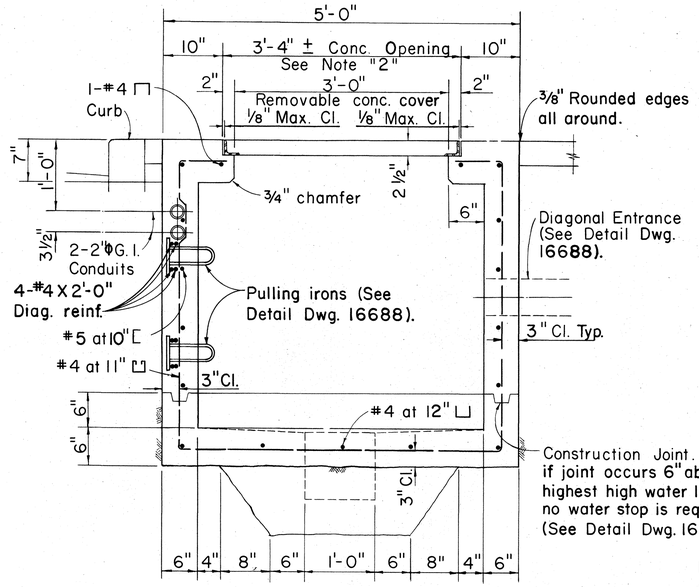

SECTION "B-B"

Scale: 1" = 1'-0"

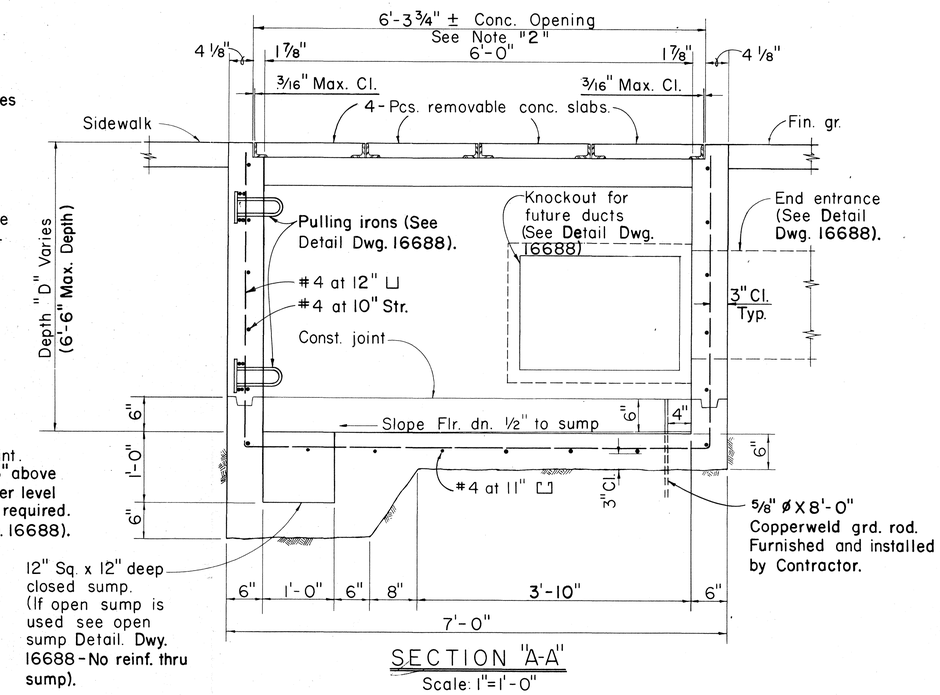

SECTION "A-A"

Scale: 1" = 1'-0"

NOTES:

1. FOR GENERAL NOTES AND MISCELLANEOUS DETAILS, REFER TO DWY. 16688 (2 SHEETS).
2. MAXIMUM CLEARANCES BETWEEN REMOVABLE CONCRETE COVERS AND CONCRETE OPENING AT THE SUPPORTS MUST BE KEPT. CONCRETE CONTRACTOR SHALL MEASURE COVER SLAB STEEL FRAME AFTER FABRICATION TO OBTAIN PROPER CLEARANCES. ANY VARIATION IN CLEARANCES SHALL BE CORRECTED TO THE SATISFACTION OF THE ENGINEER AT CONTRACTOR'S EXPENSE.
3. TWO - 2" ø G.I. COND. FOR STREET LIGHTING TO BE INSTALLED ONLY WHEN OUTSIDE FACE OF HANDHOLE IS LESS THAN 3" FROM CURBING.
4. TOP OF HANDHOLE SHALL MATCH NEW AND/OR EXISTING GRADES UNLESS OTHERWISE SHOWN OR NOTED ON PLANS OF PROJECT CONCERNED.
5. FOR DUCT ENTRANCES, DEPTH AND LOCATIONS OF PULLING IRONS, SEE HANDHOLE DEVELOPMENTS OF PROJECT CONCERNED.
6. SEE PROJECT DRAWING FOR LOCATION OF HANDHOLE CONCERNED.

PROPERTY LINE SIDE

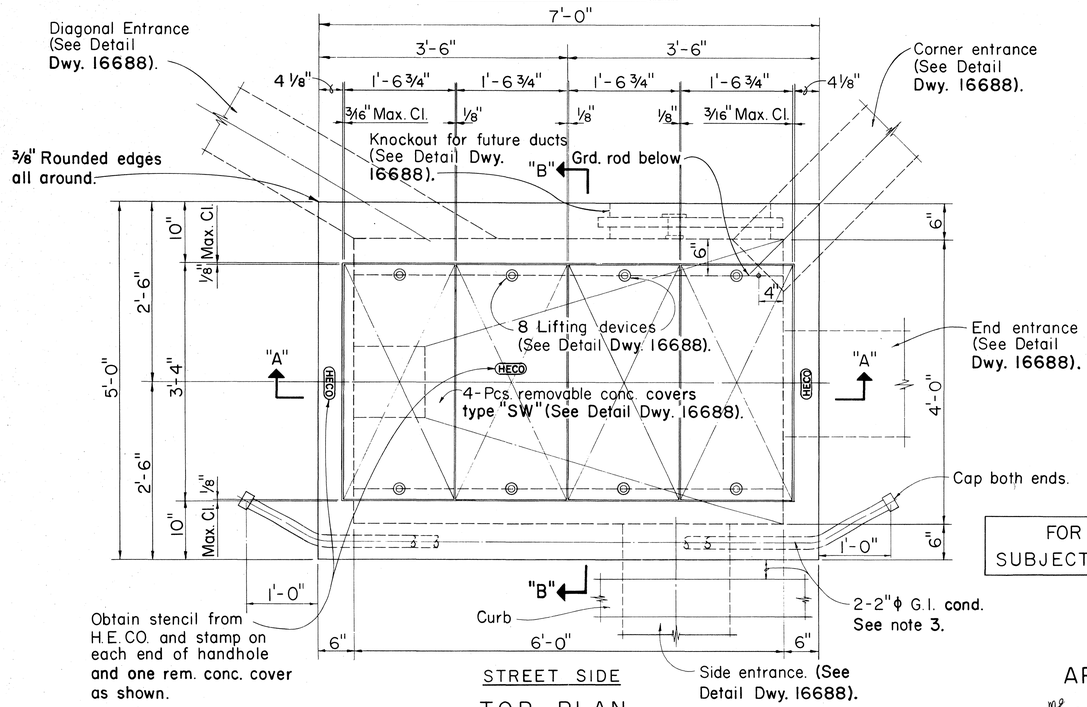

STREET SIDE

TOP PLAN

Scale: 1" = 1'-0"

REINFORCED CONCRETE QUANTITIES

QUANTITIES OF MATERIALS FOR DEPTH "D" = 5'-0",

Total concrete	=	3.0 Cu. Yds.
Total reinf. steel	=	427 Lbs.
Total misc. steel	=	160 Lbs.

WEIGHT PER REMOVABLE CONCRETE COVER

Concrete	=	150 Lbs.
Reinf. steel	=	7 Lbs.
Misc. steel	=	42 Lbs.
TOTAL		199 Lbs.

MATERIALS FOR 6" DEPTH OF 6" THICK WALL,

Concrete	=	0.2 Cu. Yds.
Reinf. steel	=	25 Lbs.

FOR USE IN AREAS NOT SUBJECT TO VEHICULAR TRAFFIC

APPROVED:

9-14-78

HAWAIIAN ELECTRIC CO., INC. DATE

HECo., Inc. Drawing Number

18842 SHEET No. 1 OF 1 SHEET

STATE OF HAWAII
DEPARTMENT OF TRANSPORTATION
LAND TRANSPORTATION FACILITIES DIVISION

STANDARD DETAILS

HANDHOLE TYPE
46 (4'-0" x 6'-0")
UNDERGROUND STANDARDS

Scale: As Shown AUG 1978

SHEET No. 27 OF 38 SHEETS

ORIGINAL PLAN | SURVEY PLOTTED BY | DRAWN BY | TRACED BY | DESIGNED BY | QUANTITIES BY | CHECKED BY | DATE | NOTE BOOK | No.

FED. ROAD DIST. NO.	STATE	FED. AID PROJ. NO.	FISCAL YEAR	SHEET NO.	TOTAL SHEETS
HAWAII	HAW.	F-083-1(10)	1978	76	160

GENERAL NOTES FOR MANHOLES & HANDHOLES STANDARD DETAILS

1. All work shall be subject to inspection by the Hawaiian Electric Co., Inc., Contracting & Inspection Division, City & County of Honolulu and/or Land Transportation Facilities Division, State of Hawaii, whichever Government has authority over the work.
2. Contractor shall notify the Hawaiian Electric Co., Inc., Contracting & Inspection Division, phone 548-4427 or 548-4428 24 hours before proceeding with any work on facilities owned by Hawaiian Electric Co., Inc..
3. Ducts: For number; size and exact location of Duct Entrances, refer to Project Drawings.
4. Pulling Irons: For number and locations, refer to Project Drawings.

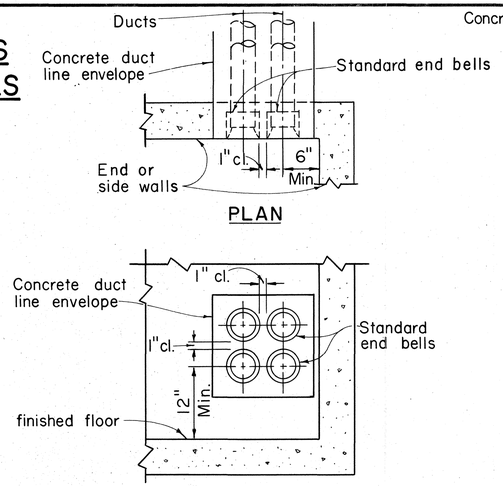

END OR SIDE ENTRANCE

Scale: 1" = 1'-0"

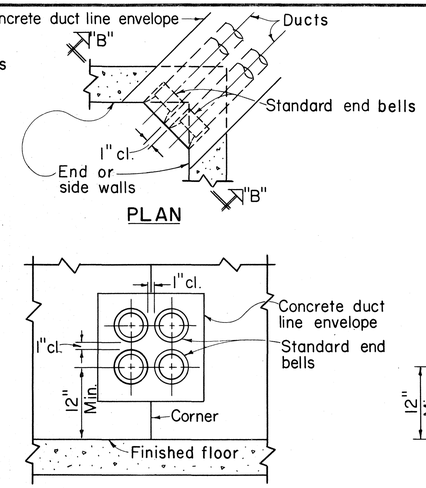

CORNER ENTRANCE

Scale: 1" = 1'-0"

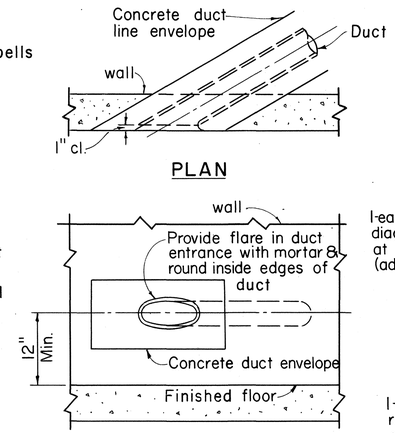

DIAGONAL ENTRANCE

Scale: 1" = 1'-0"

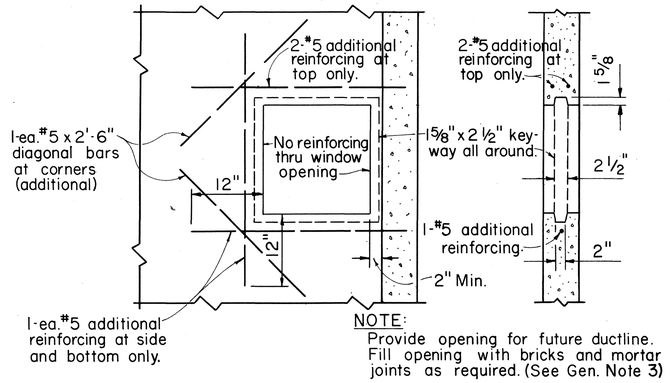

NOTE:
Provide opening for future ductline. Fill opening with bricks and mortar joints as required. (See Gen. Note 3)

KNOCKOUT FOR FUTURE DUCT LINE

Scale: 1" = 1'-0"

NOTES:
1. Hot-dip galvanized after fabrication.
2. For additional reinf. see Proj Dwg.

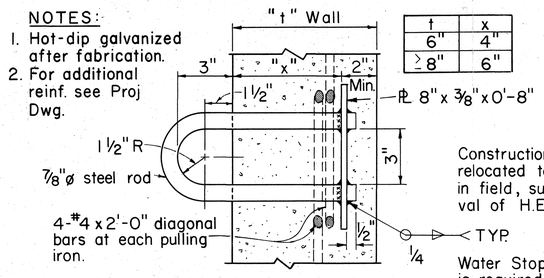

t	x
6"	4"
≥ 8"	6"

SECTION

PULLING IRON

Scale: 3" = 1'-0"

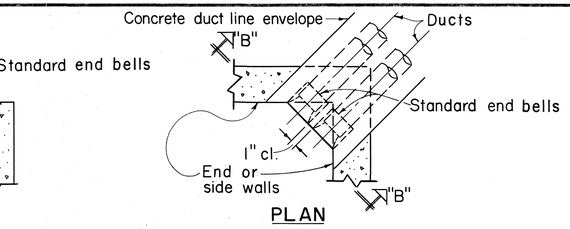

SECTION

TYPICAL CONSTRUCTION JOINT

Scale: 1 1/2" = 1'-0"

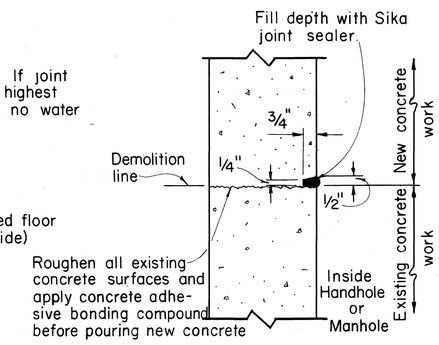

SECTION

TYPICAL COLD JOINT

Scale: 3" = 1'-0"

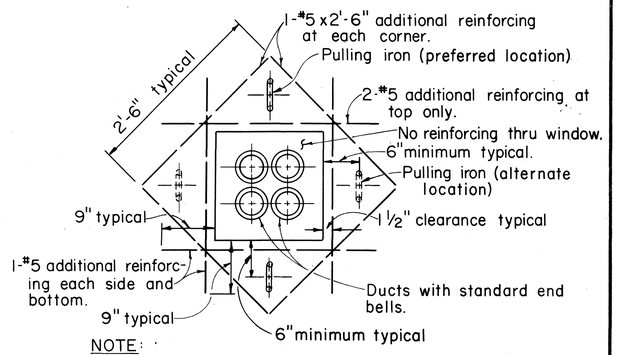

NOTE:
Generally 2 pulling irons are required and located on opposite wall of each duct window unless otherwise shown or noted. H.E.Co. Engineer shall determine number required.

ELEVATION

TYPICAL DUCT WINDOW

Scale: 1" = 1'-0"

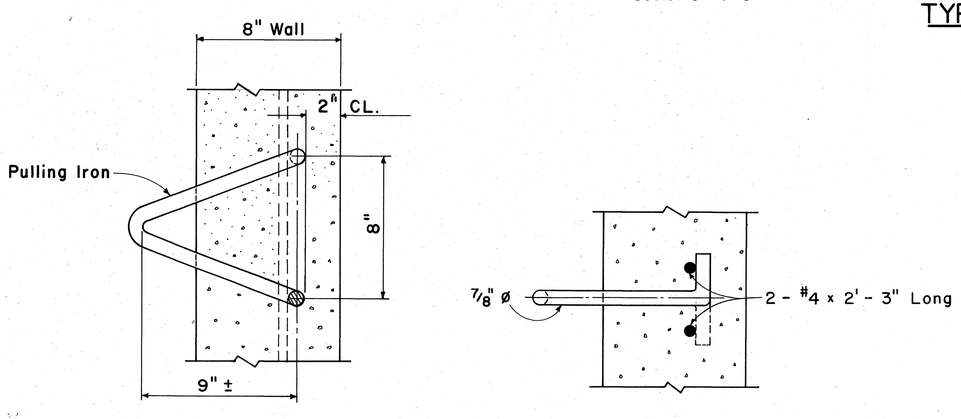

PULLING IRON FOR 8" WALL

Scale: 3" = 1'-0"

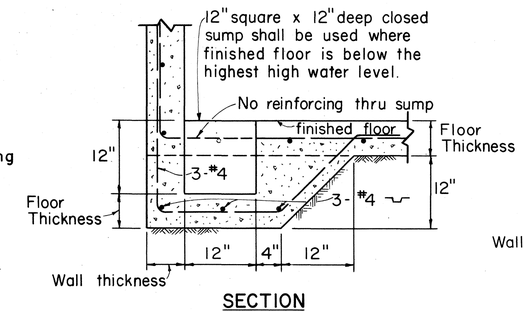

CLOSED SUMP

Scale: 1" = 1'-0"

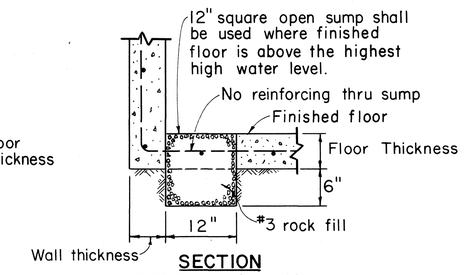

OPEN SUMP

Scale: 1" = 1'-0"

APPROVED:
M.J. Ruggeo 9-14-78
Hawaiian Electric Co., Inc. Date

HECo., Inc. Drawing Number
16688
SHEET NO. 1 OF 2 SHEETS

STATE OF HAWAII
DEPARTMENT OF TRANSPORTATION
LAND TRANSPORTATION FACILITIES DIVISION

MISCELLANEOUS DETAILS
HANDHOLES & MANHOLES
UNDERGROUND STANDARDS

Scale as noted AUG 1978

SHEET No. 28 OF 38 SHEETS

ORIGINAL PLAN | NOTE BOOK No. | SURVEY PLOTTED BY | DRAWN BY | TRACED BY | DESIGNED BY | QUANTITIES BY | CHECKED BY | DATE

76

HE-7

FED. ROAD DIST. NO.	STATE	FED. AID PROJ. NO.	FISCAL YEAR	SHEET NO.	TOTAL SHEETS
HAWAII	HAW.	F-083-1(10)	1978	77	160

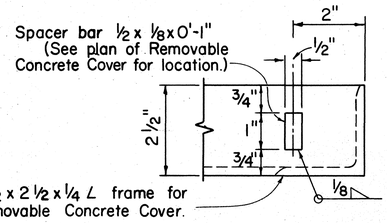

PART ELEVATION
SPACER BAR
Scale: 1/2 full size

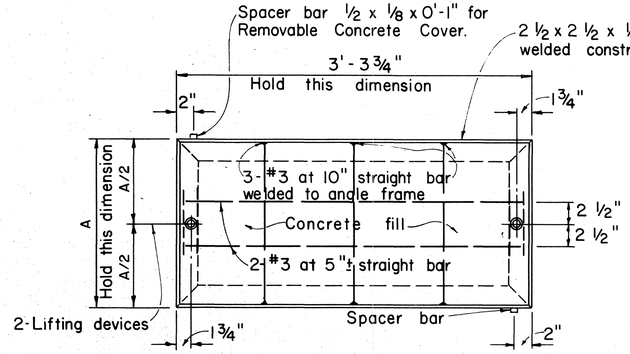

PLAN
Scale: 1 1/2" = 1'-0"

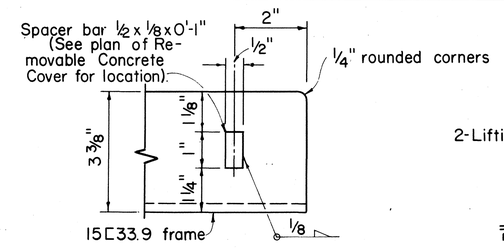

PART ELEVATION
SPACER BAR
Scale: 1/2 full size

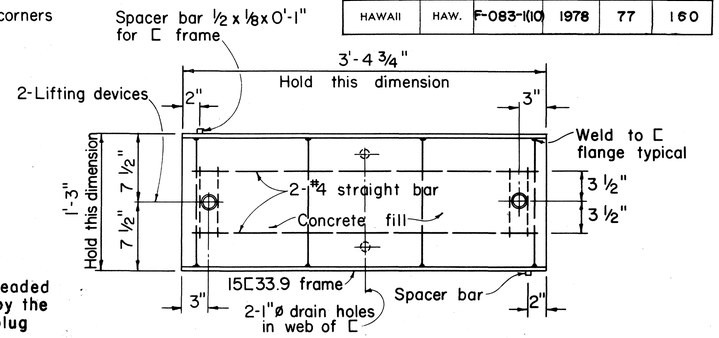

PLAN
Scale: 1 1/2" = 1'-0"

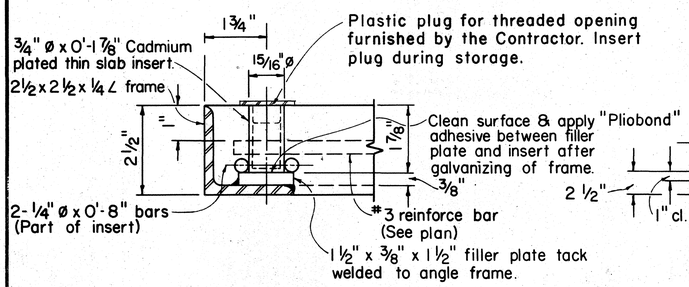

PART SECTION
LIFTING DEVICE
Scale: 1/2 full size

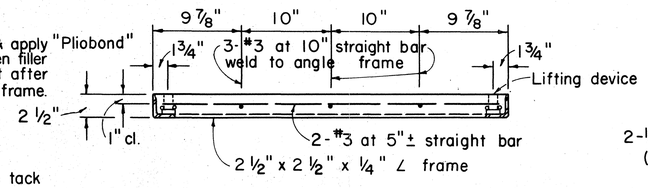

SECTION
Scale: 1 1/2" = 1'-0"

NOTE: Galvanize L frame or □ frame, steel rods, and spacer bars after fabrication.

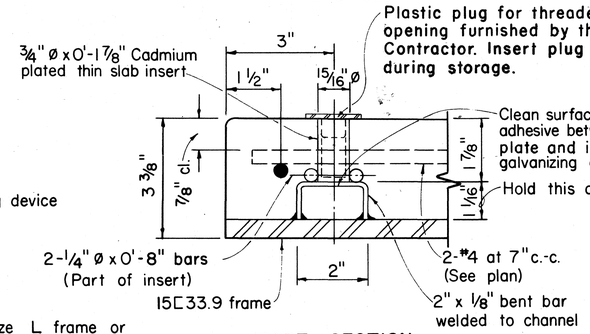

PART SECTION
LIFTING DEVICE
Scale: 1/2 full size

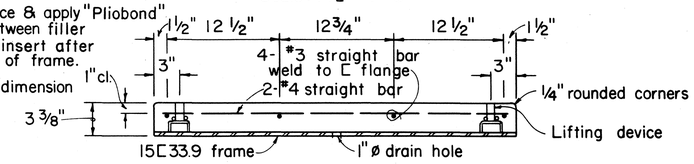

SECTION
Scale: 1 1/2" = 1'-0"

TYPE "TR" REMOVABLE CONCRETE COVER

TYPE	DIMENSIONS	
	A	A/2
"SW"	1'-6 3/4"	9 3/8"
"SWI"	1'-2 13/16"	7 13/32"

TYPE "SW" & "SWI" REMOVABLE CONCRETE COVER

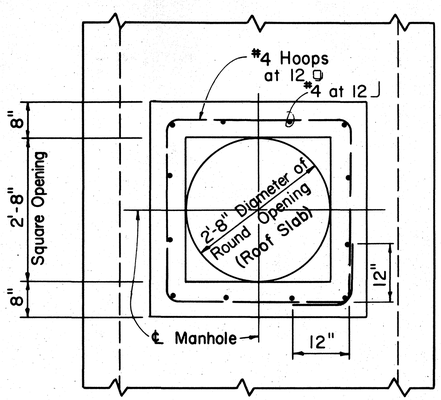

PLAN

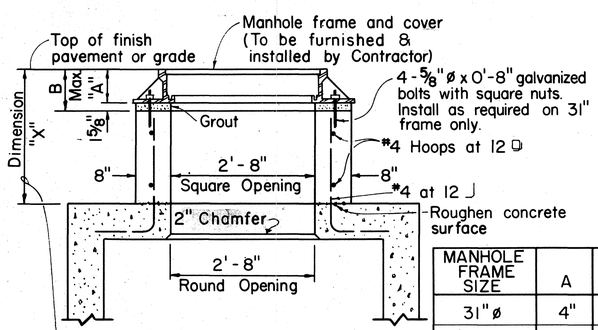

NOTE:
Use alternate manhole neck only when dimension "X" is greater than 1'-6".

SECTION

MANHOLE FRAME SIZE	A	B
31" ø	4"	5 5/8"
28" ø	7 3/8"	9"

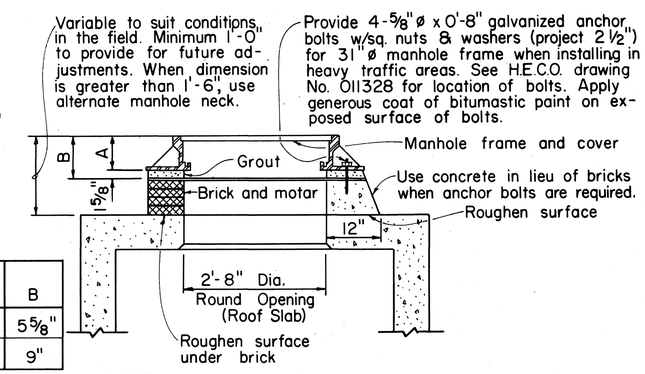

NOTE:
See table alternate manhole neck detail for dimension A and B.

ALTERNATE MANHOLE NECK
Scale: 3/4" = 1'-0"

31" ø & 28" ø MANHOLE FRAME NECK DETAIL
Scale: 3/4" = 1'-0"

APPROVED:
Hawaiian Electric Co., Inc. — Date 9-14-78

HECo., Inc. Drawing Number
16688
SHEET NO. 2 OF 2 SHEETS

STATE OF HAWAII
DEPARTMENT OF TRANSPORTATION
LAND TRANSPORTATION FACILITIES DIVISION

MISCELLANEOUS DETAILS
HANDHOLES & MANHOLES
UNDERGROUND STANDARDS

Scale as noted — AUG 1978

SHEET No. 29 OF 38 SHEETS

77

ORIGINAL PLAN — SURVEY PLOTTED BY, DRAWN BY, TRACED BY, DESIGNED BY, QUANTITIES BY, CHECKED BY, DATE, NOTE BOOK No.

HE-8

FED. ROAD DIST. NO.	STATE	FED. AID PROJ. NO.	FISCAL YEAR	SHEET NO.	TOTAL SHEETS
HAWAII	HAW.	F-083-1(10)	1978	78	160

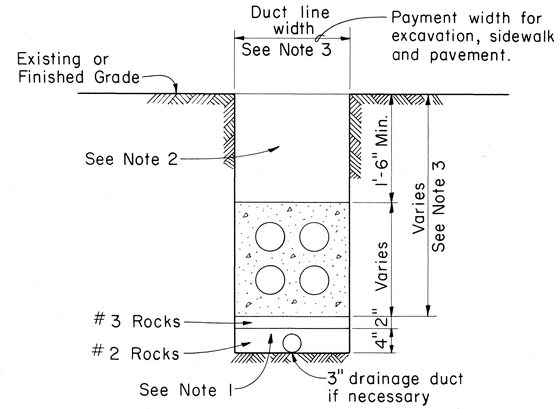

NOTES:

1. If drainage is necessary, install 6" rockfill as shown. In extremely watery areas, install 3" drainage duct.
2. Refer to H.E.Co. Specification CS7001-0 (or equivalent) for backfill material requirements.
3. Size of concrete envelope and depth of excavation to be determined by specific project.

EB EXCAVATION AND BACKFILL DETAILS

(TYPICAL)

Scale: 1 1/2" = 1'-0"

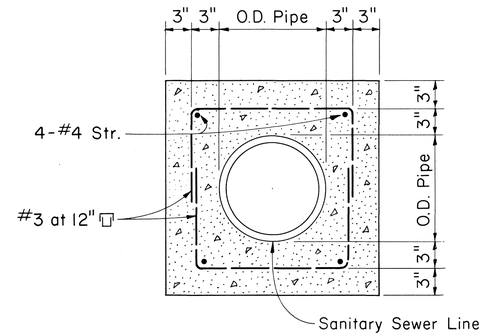

CROSS-SECTION OF SEWER LINE

NOTE:

Where duct line crosses sewer line, cover sewer line with concrete jacket as indicated in specification.

DUCT LINE WIDTH	LENGTH OF SEWER LINE TO BE COVERED
24" or less	5'
Greater than 24"	(Width of duct line) + (5')

SANITARY SEWER LINE CROSSING DETAIL

Scale: 1 1/2" = 1'-0"

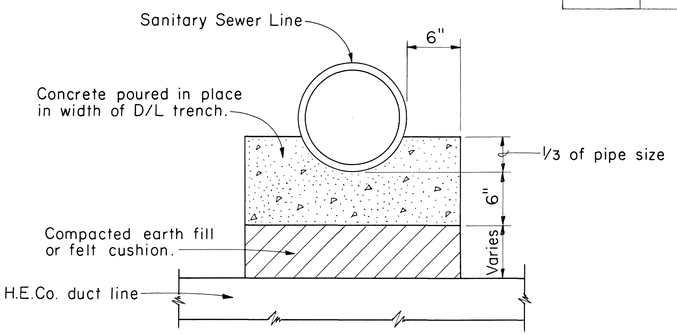

CONCRETE CRADLE FOR SANITARY SEWER LINE CROSSING

Scale: 1 1/2" = 1'-0"

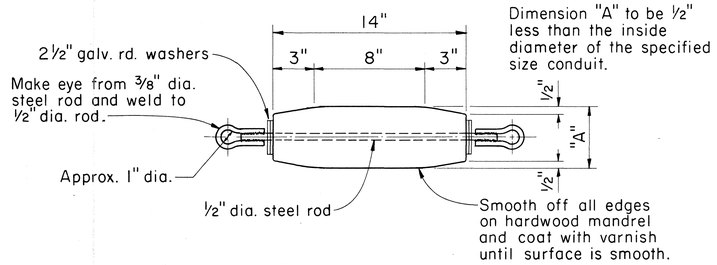

MANDREL DETAIL

Not To Scale

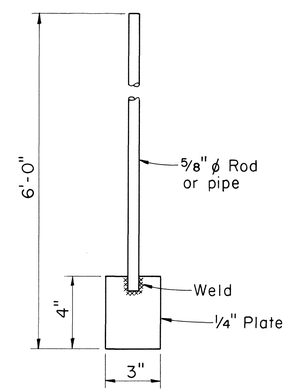

HAND SPADE

Scale: 3" = 1'-0"

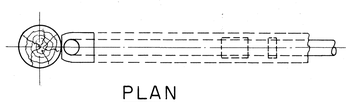

PLAN

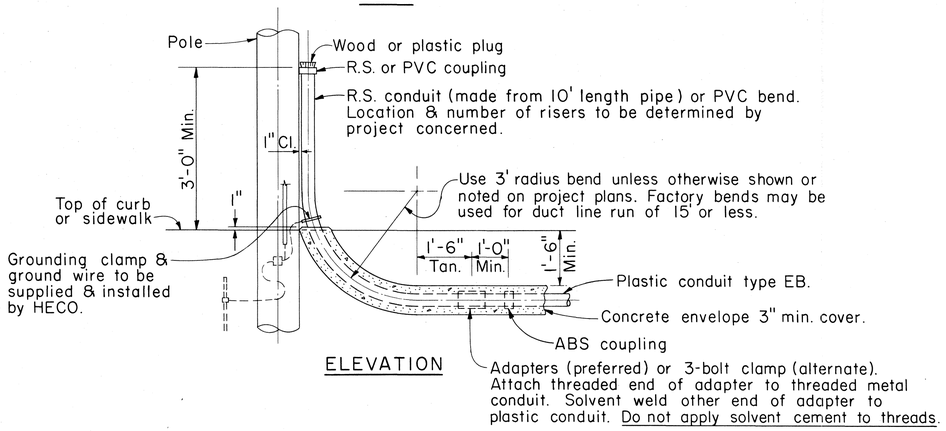

ELEVATION

TYPICAL RISER DETAIL

(POLE RISER SHOWN)

Scale: 1/2" = 1'-0"

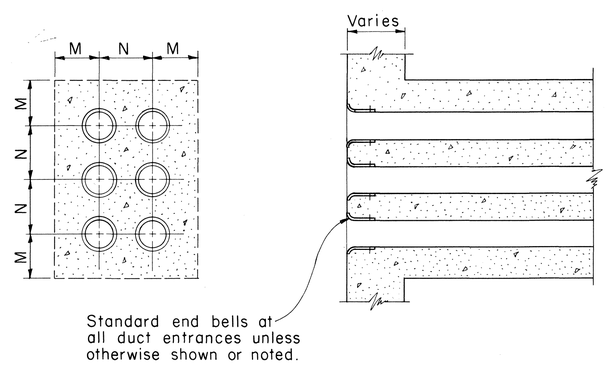

TYPICAL CONDUIT ENTRANCE INTO HANDHOLE, MANHOLE OR VAULT WALLS

(6 WAY DUCT LINE SHOWN)

Scale: 1 1/2" = 1'-0"

DUCT SIZE	DIMENSIONS (INCHES)	
	M	N
2	4	5
3	5	6
4	5 1/2	7
5	6	8
6	6 5/16	9

APPROVED:

Hawaiian Electric Co., Inc. — Date: 9-14-78

HECo., Inc. Drawing Number

30-1030

STATE OF HAWAII
DEPARTMENT OF TRANSPORTATION
LAND TRANSPORTATION FACILITIES DIVISION

TYPICAL DUCT CONSTRUCTION INSTALLATION DETAILS UNDERGROUND DETAILS

Scale as noted — AUG 1978

SHEET No. 30 OF 38 SHEETS

ORIGINAL PLAN	SURVEY PLOTTED BY	DATE
	DRAWN BY	"
	TRACED BY	"
NOTE BOOK	DESIGNED BY	"
	QUANTITIES BY	"
No.	CHECKED BY	"

78

HE-37

FED. ROAD DIST. NO.	STATE	FED. AID PROJ. NO.	FISCAL YEAR	SHEET NO.	TOTAL SHEETS
HAWAII	HAW.	F-083-1(10)	1978	79	160

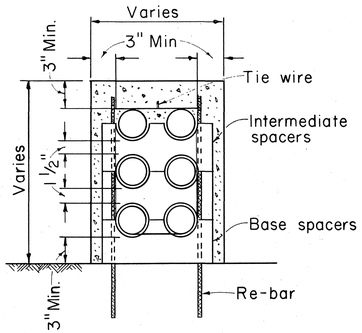

SECTION

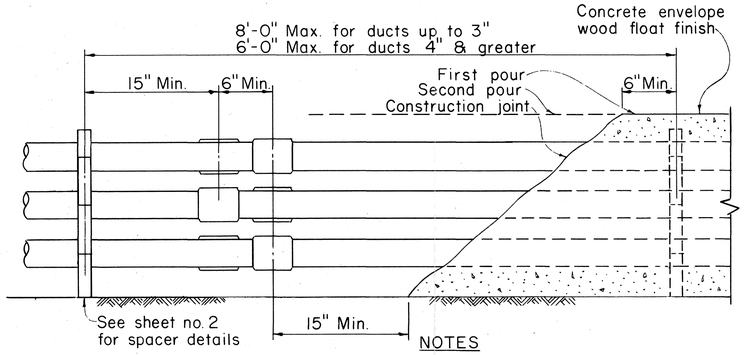

ELEVATION

TYPICAL DUCT LINE

(6-WAY DUCT SHOWN)

Scale: 1 1/2" = 1'-0"

NOTES

1. Stagger couplings (or belled ends).
2. Anchor conduit with #14 steel tie wire & #4 reinforcing bars.
3. Cement all joints.
4. Avoid standing on conduit.

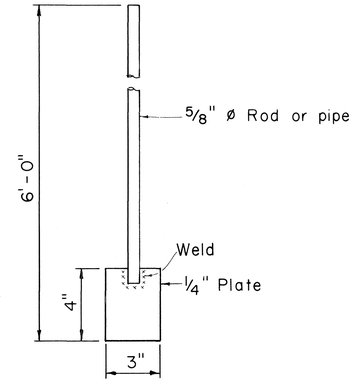

HAND SPADE

Scale: 3" = 1'-0"

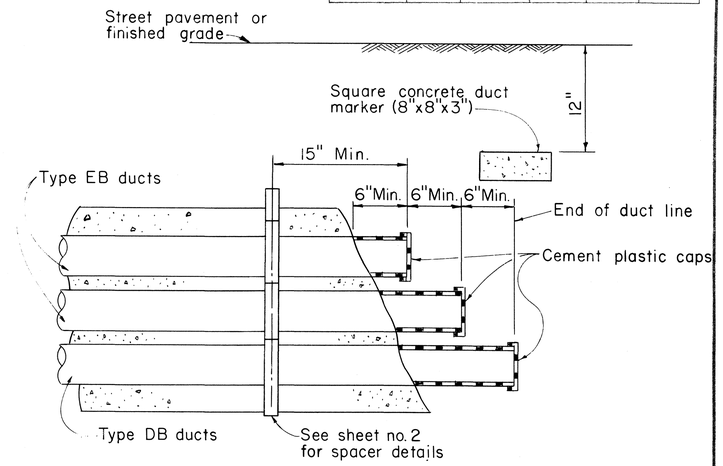

TYPICAL STUB OUT DETAIL

(6-WAY DUCT SHOWN)

Scale: 1 1/2" = 1'-0"

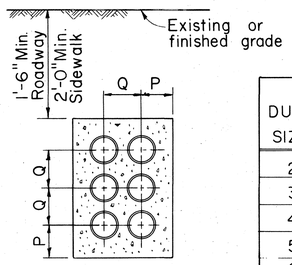

DUCT SIZE	DIMENSIONS (INCHES) P	Q
2	4 1/4	4 1/8
3	4 3/4	5 1/8
4	5 1/4	6 1/4
5	5 7/8	7 5/8
6	6 5/16	8 5/8

EB TYPICAL DUCT SECTION

(6-WAY DUCT SHOWN)

Scale: 1" = 1'-0"

NOTE:

1. Maintain 1 1/2" minimum spacing between conduit; 3" minimum concrete envelope around top, bottom & sides.
2. Dimensions are minimum dimensions.
3. The bottom row in an encased duct bank of three or more layers shall be Type DB ducts. The remaining ducts shall be Type EB.

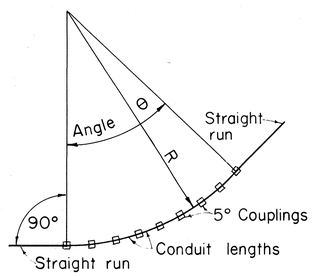

TABLE "A"	
APPROX. RADIUS OF BEND, R	LENGTH OF EA. CONDUIT-FT USING 5° BEND AT COUPL.
11'-6"	1
17'-3"	1.5
23'-0"	2
28'-9"	2.5
34'-6"	3
40'-3"	3.5
46'-0"	4
51'-9"	4.5
57'-6"	5
69'-0"	6
80'-6"	7
92'-0"	8

TABLE "B"		
ANGLE OF BEND θ	NO. OF COUPLINGS	LENGTH OF CONDUIT
15°	3	2
30°	6	5
45°	9	8
60°	12	11
75°	15	14
90°	18	17

EXAMPLE:

Radius of bend (R) = 60'
Angle of bend (θ) = 45°

From Table A, the nearest value to 60' radius is 57'-6". Length of conduit = 5'.

From Table B, for 45° angle.
Number of couplings required = 9
Number of conduit lengths required = 8

METHOD OF FORMING CURVES:

There are 4 methods of forming curves with plastic conduit.

1. "Cold" bending: Limit trench formed radius sweeps to 25' minimum radius.
2. "Heat" bending: Do not heat bend conduit.
3. 5° angle couplings may be used as shown.
4. Factory made elbows and sweeps may be used only when specified by Engineer.

APPLICATION OF 5° COUPLING FOR LONG RADIUS BENDS

GENERAL NOTES

A. APPROVED CONDUIT MATERIALS — HECO PURCHASE SPECIFICATION NO.

1. Encased Burial (EB) Conduit
   a) Asbetos Cement, Type I ---------- M7005
   b) ABS (Acrylonitrile-Butadiene-Styrene) Plastic Conduit, Type EB ---------- M7001
   c) PVC (Polyvinyl Chloride) Plastic Conduit, Type EB ---- M7001
   d) PVC Plastic Conduit, Schedule 40 ---------- 116
   See note 3 EB Typical Duct Section
2. Direct Burial (DB) Conduit
   a) ABS Plastic Conduit, Type DB ---------- M7001
   b) PVC Plastic Conduit ---------- M7001
   c) PVC Plastic Conduit, Schedule 40 ---------- 116

B. This drawing provides details for installing Plastic Ducts (ABS & PVC) only. Refer to drawing 30-1030 & 30-1033 for installing Asbestos Cement Ducts Encased Burial.

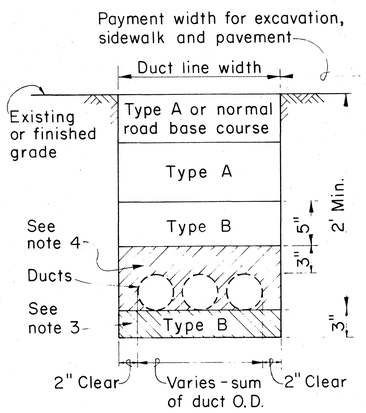

NOTES:

1. Type A: Beach sand, earth or earth and gravel. If earth and gravel, the max. rock size shall be 1" and the mixture shall contain not more than 50%, by volume, of rock particles.
2. Type B: Beach sand, earth or earth and gravel. If earth and gravel, the mixture must pass a 1/2" mesh screen and contain not more than 20%, by volume, of rock particles.
3. When trench bottom is coarser than Type B material, provide 3" duct cushion.
4. Soil poison details: Use an aqueous solution of 2% chlordane, 1% dieldrin or 1% adlrin, when specified by engineer. Apply soil poison (1 gal. per 3 square feet) to trench floor and to layer of backfill from trench floor to 3" above conduit.

D.B. EXCAVATION & BACKFILL DETAILS (TYPICAL)

Scale 1 1/2" = 1'-0"

REFERENCE SPECIFICATION

CS 7202 General Conditions
CS 7001 Construction of U.G. Facilities
CS 7003 Construction of Electrical Facilities

APPROVED:
M.J. Wilson 9-14-78
Hawaiian Electric Co., Inc. Date

HECo., Inc. Drawing Number
30-1035 SHEET No. 1 OF 2 SHEETS

STATE OF HAWAII
DEPARTMENT OF TRANSPORTATION
LAND TRANSPORTATION FACILITIES DIVISION

STANDARD DETAILS

PLASTIC DUCTS
INSTALLATION DETAILS
UNDERGROUND STRUCTURES

Scale as noted AUG 1978

SHEET No. 31 OF 38 SHEETS

79

ORIGINAL PLAN — NOTE BOOK No. — SURVEY PLOTTED BY — DRAWN BY — TRACED BY — DESIGNED BY — QUANTITIES BY — CHECKED BY — DATE

FED. ROAD DIST. NO.	STATE	FED. AID PROJ. NO.	FISCAL YEAR	SHEET NO.	TOTAL SHEETS
HAWAII	HAW.	F-083-1(10)	1978	80	160

10, 20 & 30 Ft. lengths available.

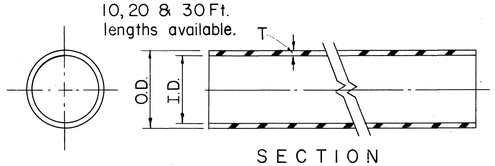

SECTION

CONDUIT

CONDUIT SIZE	EB (ENCASED BURIAL) HECO CODE	O.D.	I.D.	T (MIN.)	WEIGHT #/10² FT.	DB (DIRECT BURIAL) HECO CODE	O.D.	I.D.	T (MIN.)	WEIGHT #/10² FT.
2		2.375	2.25	.060	21	29010	2.375	2.15	.110	38
3		3.500	3.35	.075	39	29012	3.500	3.25	.125	64
4		4.500	4.31	.095	63	29014	4.500	4.18	.160	104
5		5.563	5.36	.100	82	29016	5.563	5.20	.180	146
6		6.625	6.375	.125	121		6.625	6.25	.190	182

NOTE: Type EB & DB Conduits have same O.D. for a given size. All fittings which go over Conduits are DB type & fit both types of Conduits.

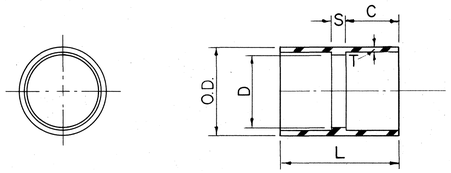

SECTION

SIZE	HECO CODE	O.D.	D	L	C	S	T
2		2.620	2.255	2 7/16	1.16	.110	.110
3		3.780	3.350	3 3/8	1.63	.120	.125
4		4.855	4.310	3 11/16	1.78	.120	.160
5		5.965	5.363	4 3/32	1.97	.160	.180
6		7.050	6.375	4 15/32	2.16	.160	.190

COUPLING (ASTM D-2750)

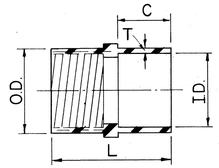

SECTION

SIZE	HECO CODE	O.D.	I.D.	L	T	C
2				2 15/16	1 1/16	1.16
3				3 7/16	1 5/8	1.63
4				3 11/16	1 23/32	1.78
5				4 1/16	1 27/32	1.97
6				15 5/8	1 11/16	3.44

ADAPTER - PLASTIC TO STEEL

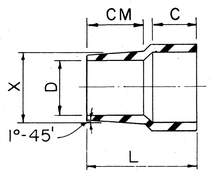

SIZE	HECO CODE	L	X	C.M.	D	C
2		3 1/16	2.580	1 3/4	2.18	1.16
3		3 19/32	3.620	1 3/4	3.09	1.63
4		4 1/32	4.620	2	4.03	1.78
5						

ADAPTER - PLASTIC TO ASBESTOS CEMENT

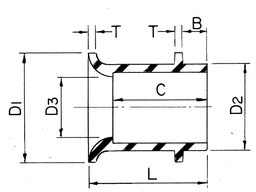

SIZE	HECO CODE	D1	D2	D3	B	C	L	T
2		3.01	2.520	2.255	.50	1.16	1.54	.060
3		4.10	3.680	3.350	.75	1.63	2.00	.075
4		5.31	4.725	4.310	.75	1.78	2.28	.095
5		6.36	5.805	5.363	1.00	1.97	2.47	.100
6		7.38	6.920	6.375	1.00	2.16	2.66	.125

END BELL (ASTM D-2750)

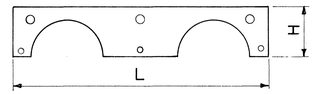

SIZE	HECO CODE	L	H
2		9.50	1.75
3		11.25	2.25
4		13.75	3.13
5		15.87	3.63
6		18.0	4.25

CAP SPACER

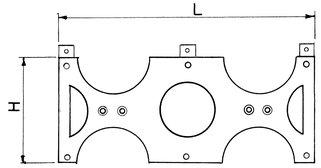

SIZE	HECO CODE	L	H	W
2		9.50	3.94	
3		11.25	5.06	
4		13.75	6.06	
5		15.97	7.06	
6		18.0	8.19	

INTERMEDIATE SPACER

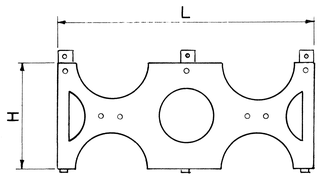

SIZE	HECO CODE	L	H
2		9.50	4.25
3		11.25	4.75
4		13.75	5.25
5		15.87	5.87
6		18.0	6.375

BASE SPACER

DUCT SPACER COMPONENTS (FORMEX SPACER OR EQUIVALENT)

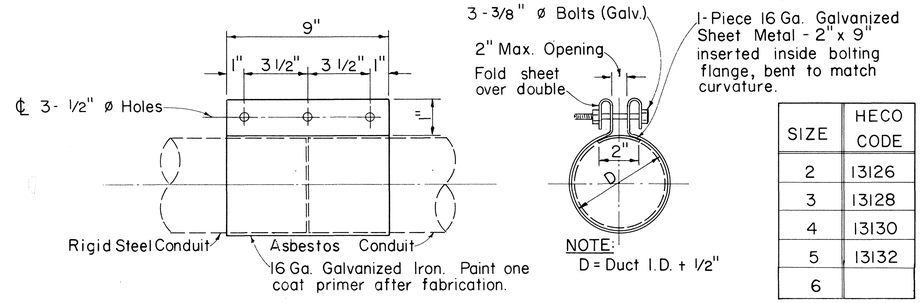

SIZE	HECO CODE
2	13126
3	13128
4	13130
5	13132
6	

3 - BOLT CLAMP

GENERAL NOTES:

1. All dimensions in inches.
2. Spacers shown are different than that used for Asbestos Cement Type.
3. These accessories are to be used with ABS (Acrylonitrile-Butadiene-Styrene), or PVC (Poly-Vinyl Chloride) Plastic Conduit, per HECO purchase specification M7001-O.

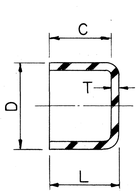

SIZE	HECO CODE	D	C	L	T
2		2.52	.59	.65	.060
3		3.68	.81	.89	.075
4		4.725	.91	1.01	.095
5		5.805	1.00	1.10	.100
6		6.920	1.13	1.25	.125

CAP (RIGID) - FOR SEMI-PERMANENT USE (ASTM D-2750)

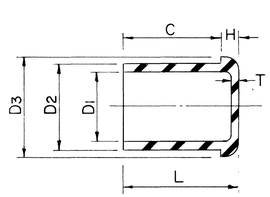

SIZE	HECO CODE	D1	D2	D3	C	H	L	T
2		2.260	2.375	2.500	.593	.125	.718	.060
3		3.360	3.500	3.656	.812	.156	.968	.075
4		4.320	4.500	4.687	.906	.187	1.092	.095
5		5.375	5.638	5.760	1.000	.218	1.218	.100
6		6.390	6.625	6.875	1.093	.250	1.343	.125

CAP (TEMPORARY) (ASTM D-2750)

NOTE: Cap will go over conduit or "plug" the coupling.

APPROVED:
MP
CLG
9-14-78
Hawaiian Electric Co., Inc. — Date

HECo., Inc. Drawing Number
30-1035
SHEET NO. 2 OF 2 SHEETS

STATE OF HAWAII
DEPARTMENT OF TRANSPORTATION
LAND TRANSPORTATION FACILITIES DIVISION

STANDARD DETAILS
PLASTIC DUCTS
INSTALLATION DETAILS
UNDERGROUND STRUCTURES

Scales: Not to Scale — AUG 1978

SHEET No. 32 OF 38 SHEETS

ORIGINAL PLAN | NOTE BOOK No. | SURVEY PLOTTED BY | DRAWN BY | TRACED BY | DESIGNED BY | QUANTITIES BY | CHECKED BY | DATE

FED. ROAD DIST. NO.	STATE	FED. AID PROJ. NO.	FISCAL YEAR	SHEET NO.	TOTAL SHEETS
HAWAII	HAW.	F-083-1(10)	1978	81	160

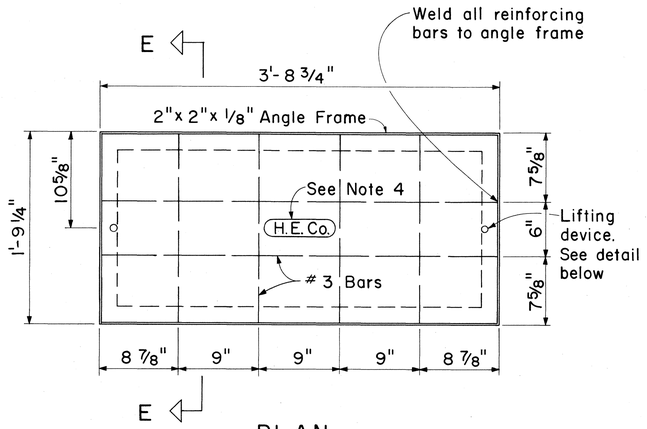

PLAN
Scale: 1 1/2" = 1'-0"

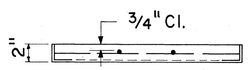

SECTION E-E
Scale: 1 1/2" = 1'-0"

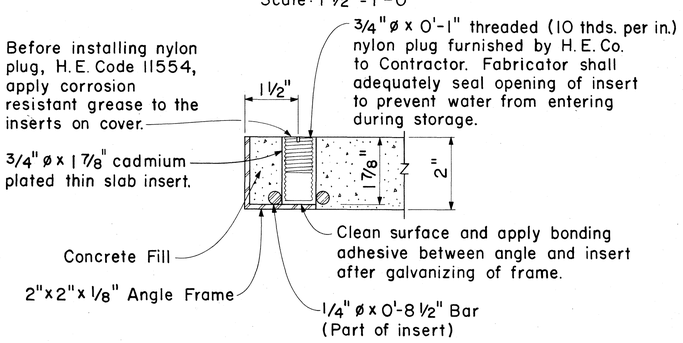

LIFTING DEVICE DETAIL
Scale: 1/2 Actual Size

CONCRETE COVER FOR 1'-6" x 3'-5 1/2" SERVICE BOX

NOTES:
1. Galvanize Angle Frame per ASTM 153 (as amended to date) after fabrication.
2. Concrete compressive strength = 3,000 psi in 28 days.
3. Finished surface shall be broomed or roughened per City & County or State Standards for sidewalks.
4. Company identification marking stamped on Cover.
5. "Contractor Furnished" item.

H.E. Co. DWG. NO. 011312

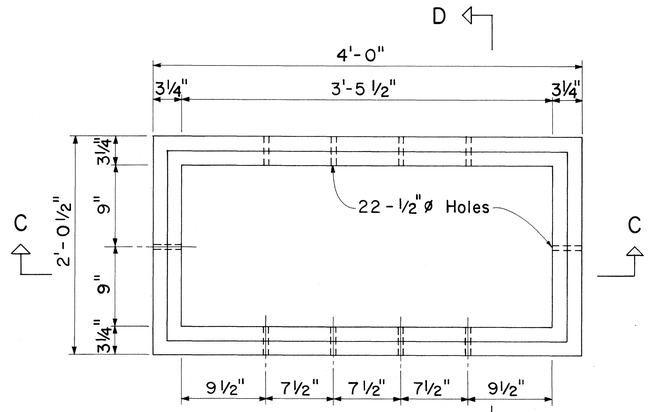

PLAN

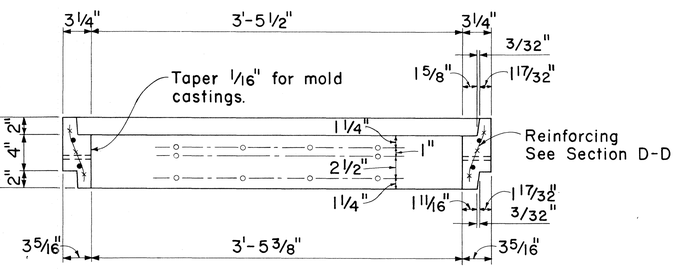

SECTION C-C

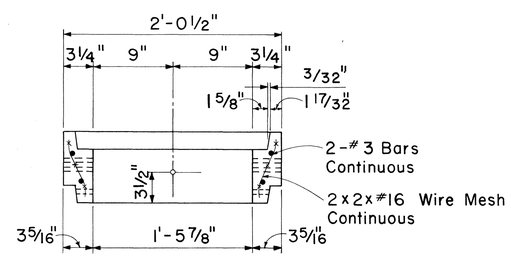

SECTION D-D

CONCRETE SERVICE BOX EXTENSION 1'-6" x 3'-5 1/2" x 0'-8" DEPTH

Scale: 1 1/2" = 1'-0

NOTES:
1. Concrete compressive strength = 3,000 psi in 28 days.
2. Weight per section = 200 lbs. ±.
3. See Drawing 011312 for Concrete Cover.
4. "Contractor Furnished" item.

H.E. Co. DWG. NO. 011311

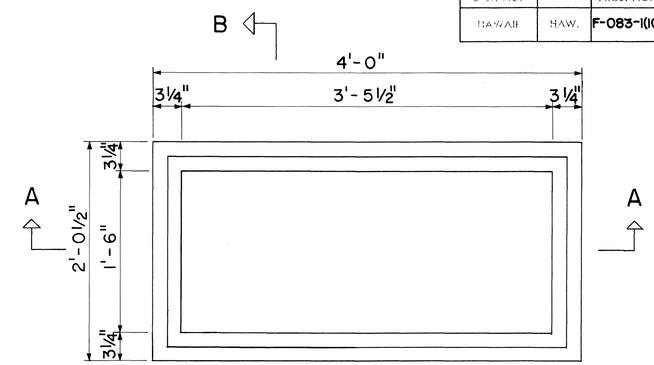

PLAN

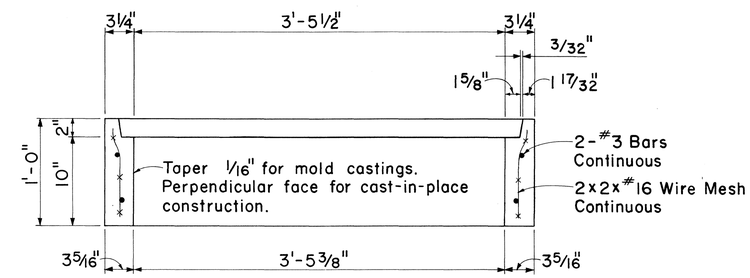

SECTION A-A

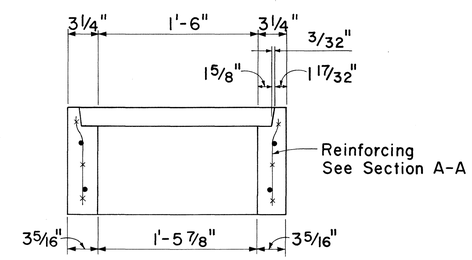

SECTION B-B

CONCRETE SERVICE BOX BODY 1'-6" x 3'-5 1/2" x 1'-0" DEPTH

Scale: 1 1/2" = 1'-0

NOTES:
1. Concrete compressive strength = 3,000 psi in 28 days.
2. Weight of box ≐ 412 lbs. ±
3. See Drawing 011312 for Concrete Cover.
4. "Contractor Furnished" item.

APPROVED:
MJG CLG
HAWAIIAN ELECTRIC Co., Inc. — DATE 9-14-78

STATE OF HAWAII
DEPARTMENT OF TRANSPORTATION
LAND TRANSPORTATION FACILITIES DIVISION

STANDARD DETAILS
CONCRETE SERVICE BOX BODY, EXTENSION AND COVER

Scale: As Noted — Date: AUG 1978

SHEET No. 33 OF 38 SHEETS

H.E. Co. DWG. NO. 011310

ORIGINAL PLAN — NOTE BOOK No. — SURVEY PLOTTED BY — DRAWN BY — TRACED BY — DESIGNED BY — QUANTITIES BY — CHECKED BY — DATE

FED. ROAD DIST. NO.	STATE	FED. AID PROJ. NO.	FISCAL YEAR	SHEET NO.	TOTAL SHEETS
HAWAII	HAW.	F-083-1(10)	1978	82	160

NOTES:

1. SEE DWG. 16688 (2 SHEETS) FOR MANHOLE MISCELLANEOUS DETAILS AND GENERAL NOTES.
2. SEE PROJECT DWGS. FOR LOCATION OF MANHOLE CONCERNED.
3. FOR DUCT ENTRANCES AND LOCATION OF PULLING IRONS, SEE MANHOLE DEVELOPMENTS OF PROJECT CONCERNED.
4. PULLING IRONS FOR 8" WALL: TYPE I PREFERRED. TYPE II OPTIONAL. SEE DWG. 16688, SHEET 1 OF 2 FOR DETAILS.

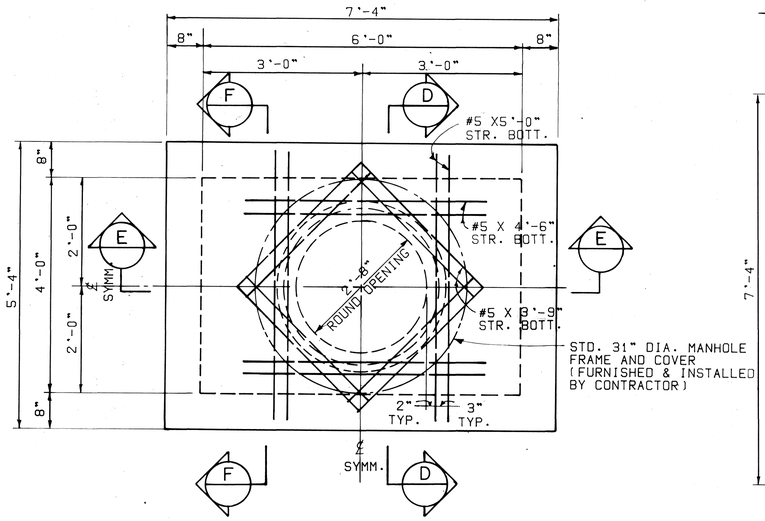

TOP PLAN
3/4" = 1'-0"

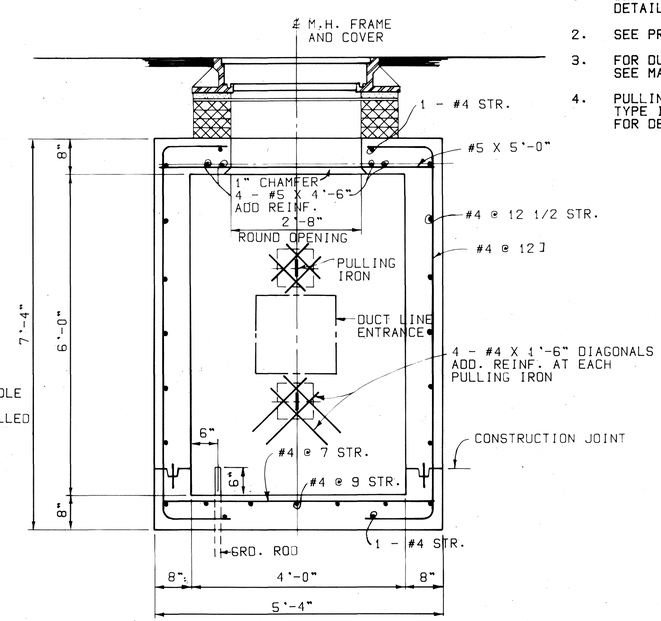

SECTION "D - D"
3/4" = 1'-0"

NOTE:
USE ALTERNATE M.H. NECK ONLY WHEN DIMENSION "X" IS GREATER THAN 1'-6" SEE DETAIL DWG. 16688

NOTE: IF NON-STD. 28" DIA. M.H. FRAME AND COVER ARE USED, SEE DWG. 16688 FOR NECK DETAIL.

STD. HECO 31" DIA. M.H. FRAME AND COVER FURNISHED AND INSTALLED BY CONTRACTOR. WHEN M.H. FRAME AND COVER ARE SUBJECTED TO HEAVY TRAFFIC, USE ANCHOR BOLTS PER M.H. NECK DETAIL ON DWG. 16688.

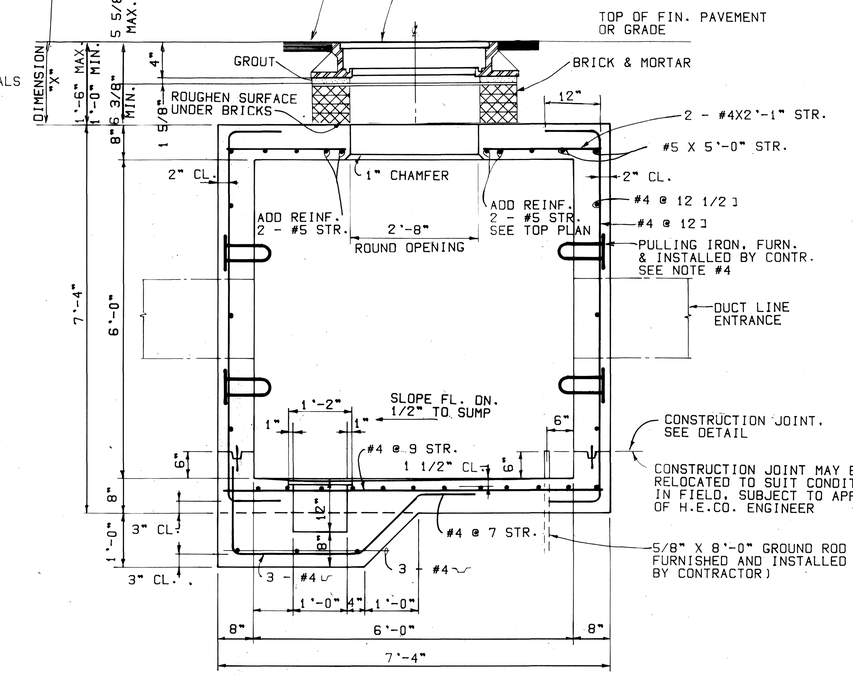

SECTION "E - E"
3/4" = 1'-0"

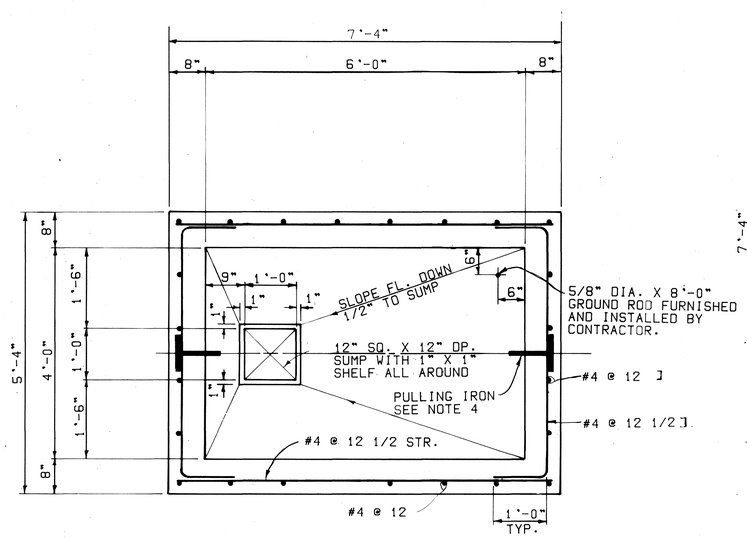

SECTIONAL PLAN
3/4" = 1'-0"

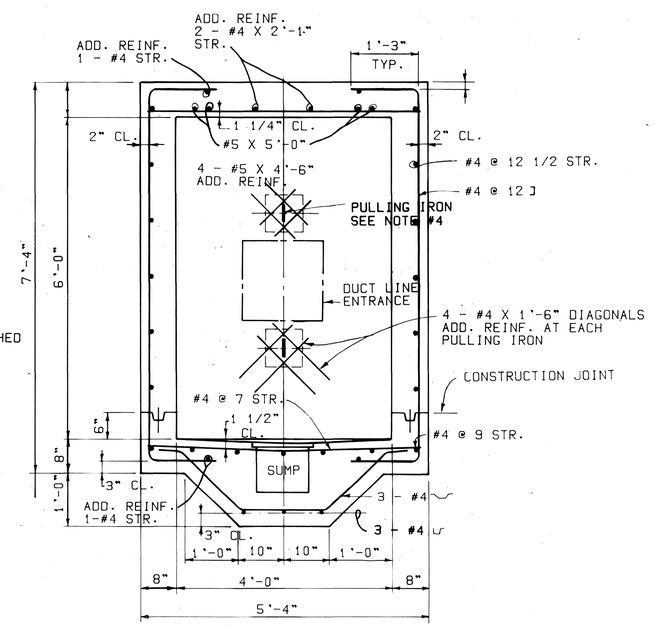

SECTION "F - F"
3/4" = 1'-0"

APPROVED

MJ Wilcox 9-14-78

HAWAIIAN ELECTRIC COMPANY — DATE

HECo., Inc.	Drawing No.
16687	SHEET NO. 1 OF 2 SHEETS

STATE OF HAWAII
DEPARTMENT OF TRANSPORTATION
LAND TRANSPORTATION FACILITIES DIVISION

MANHOLE, TYPE 46M
(4'-0 x 6'-0)
UNDERGROUND STANDARDS

Scales As Noted

AUG 1978

SHEET No. 34 OF 38 SHEETS

ORIGINAL PLAN	SURVEY PLOTTED BY	DATE
	DRAWN BY	
	TRACED BY	
NOTE BOOK	DESIGNED BY	
	QUANTITIES BY	
No.	CHECKED BY	

82

FED. ROAD DIST. NO.	STATE	FED. AID PROJ. NO.	FISCAL YEAR	SHEET NO.	TOTAL SHEETS
HAWAII	HAW.	F-083-1(10)	1978	83	160

NOTES:

1. SEE DWG. 16688 (2 SHEETS) FOR MANHOLE MISCELLANEOUS DETAILS AND GENERAL NOTES.
2. SEE PROJECT DWGS. FOR LOCATION OF MANHOLE CONCERNED.
3. FOR DUCT ENTRANCES AND LOCATION OF PULLING IRONS, SEE MANHOLE DEVELOPMENTS OF PROJECT CONCERNED.
4. PULLING IRONS FOR 8" WALL: TYPE I PREFERRED. TYPE II OPTIONAL. SEE DWG. 16688, SHEET 1 OF 2 FOR DETAILS.

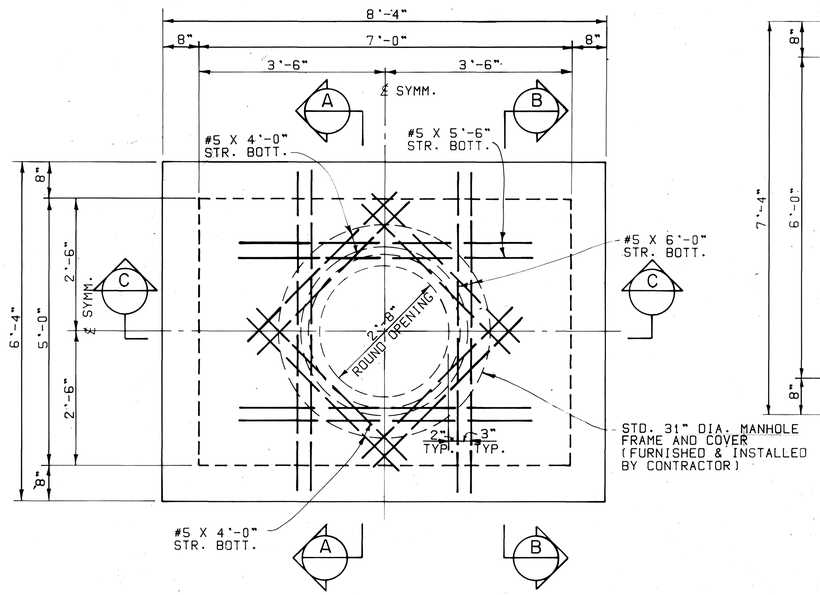

TOP PLAN
3/4" = 1'-0"

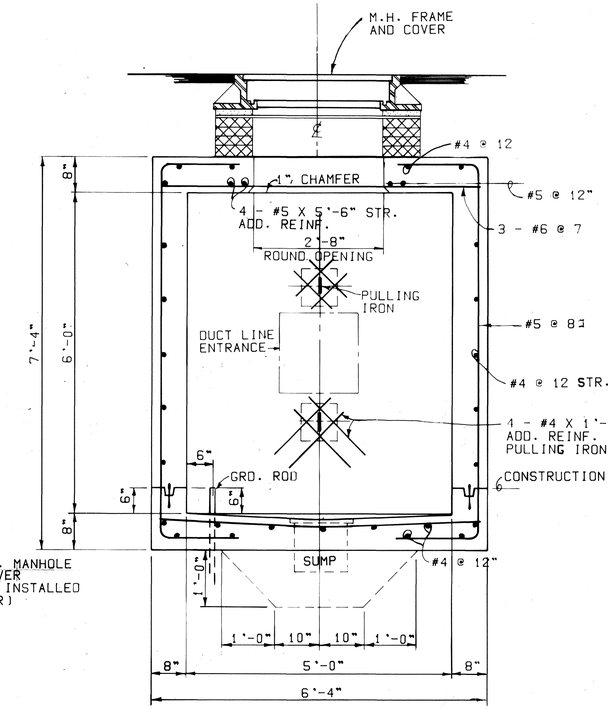

SECTION "A - A"
3/4" = 1'-0"

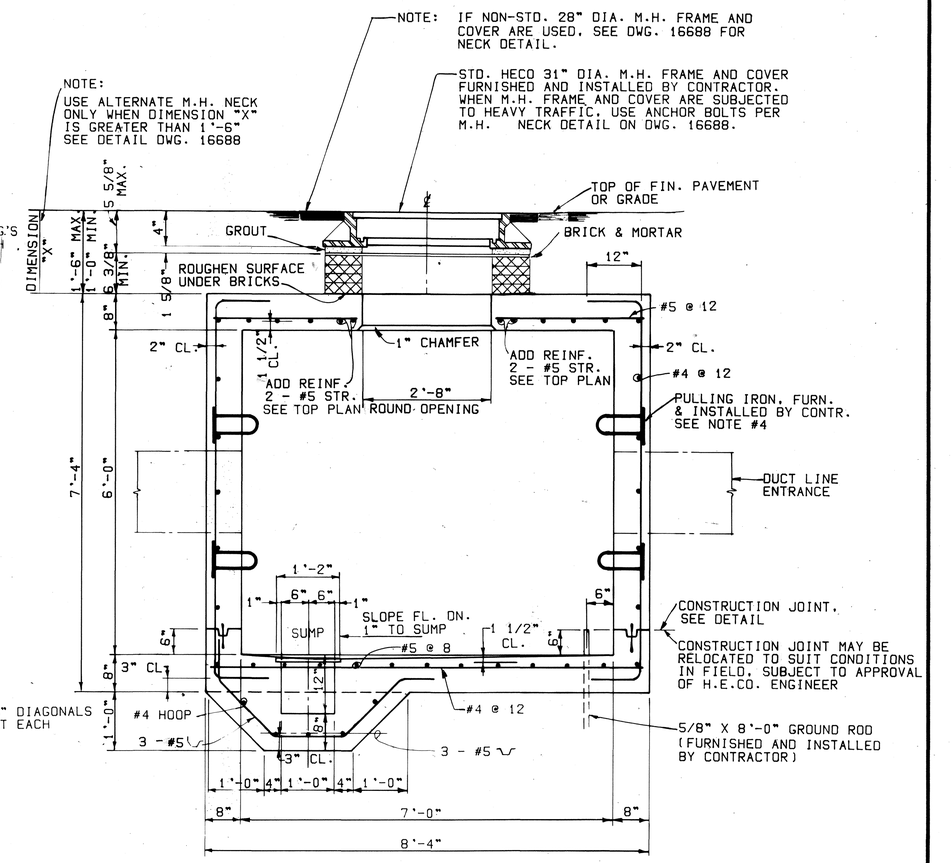

SECTION "C - C"
3/4" = 1'-0"

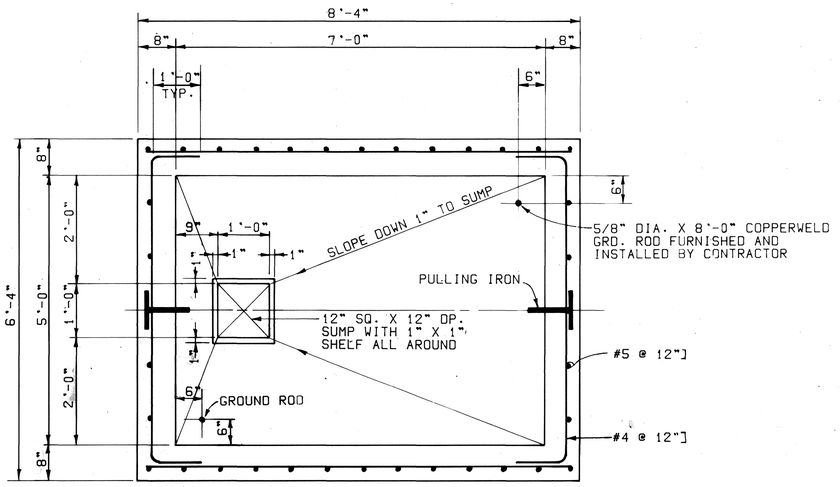

SECTIONAL PLAN
3/4" = 1'-0"

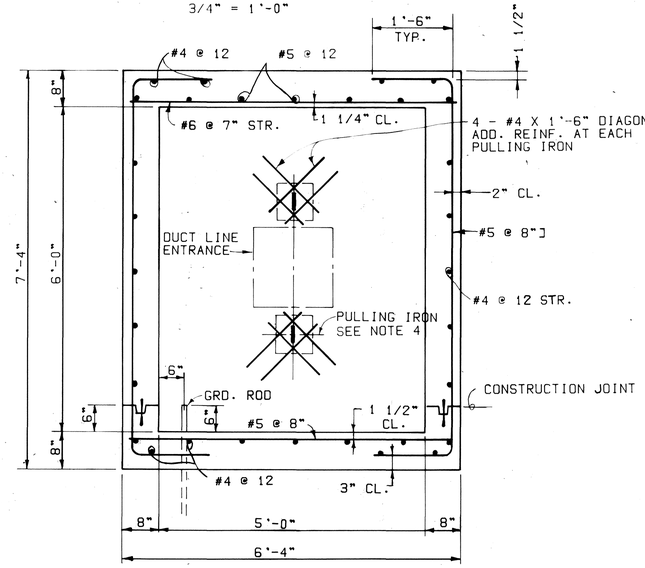

SECTION "B - B"
3/4" = 1'-0"

APPROVED

HAWAIIAN ELECTRIC COMPANY — DATE 9-14-78

HECo., Inc.	Drawing No.
16687	SHEET NO. 2 OF 2 SHEETS

STATE OF HAWAII
DEPARTMENT OF TRANSPORTATION
LAND TRANSPORTATION FACILITIES DIVISION

MANHOLE, TYPE 57M
(5'-0 x 7'-0)
UNDERGROUND STANDARDS

Scales As Noted — AUG 1978

SHEET No. 35 OF 38 SHEETS

ORIGINAL PLAN		DATE
	SURVEY PLOTTED BY	
	DRAWN BY	
	TRACED BY	
	DESIGNED BY	
NOTE BOOK	QUANTITIES BY	
No.	CHECKED BY	

FED. ROAD DIST. NO.	STATE	FED. AID PROJ. NO.	FISCAL YEAR	SHEET NO.	TOTAL SHEETS
HAWAII	HAW.	F-083-1(10)	1978	84	160

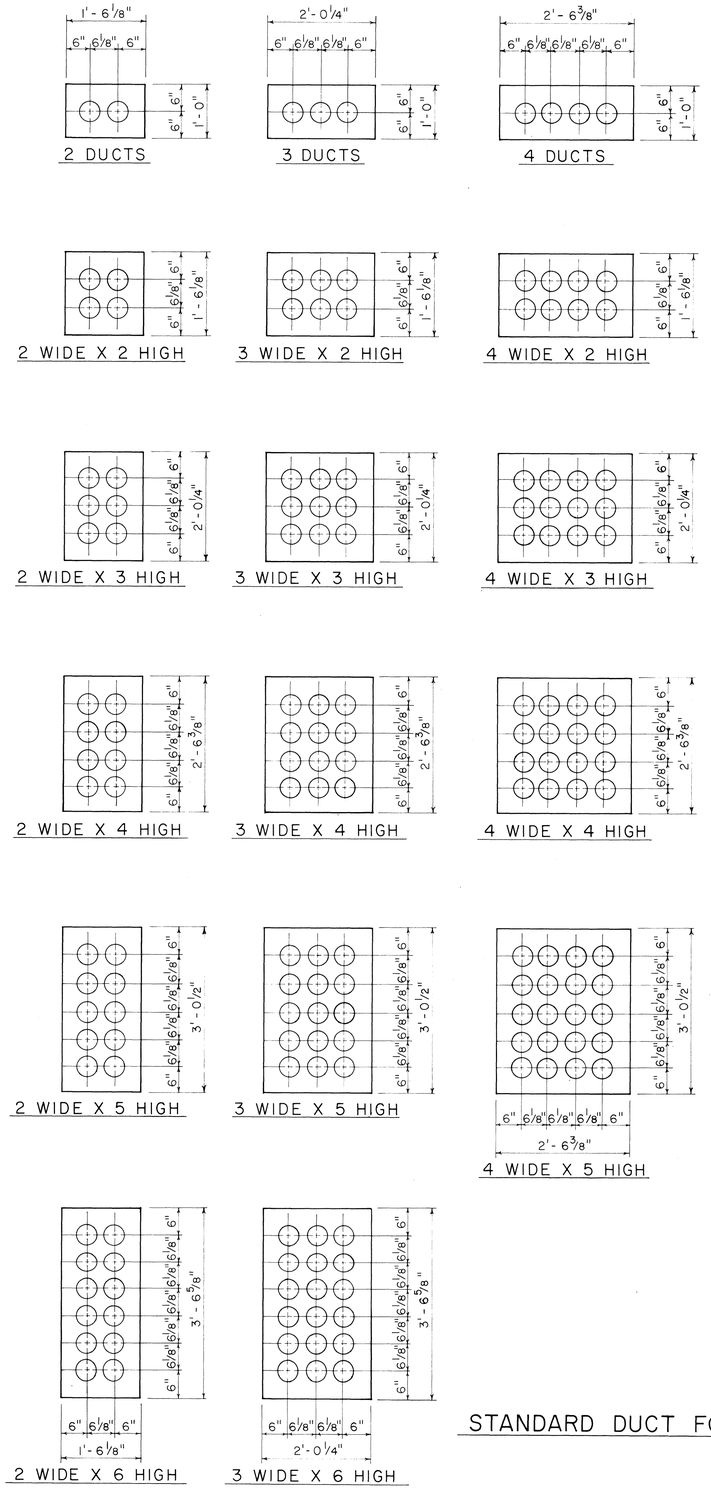

STANDARD DUCT FORMATIONS

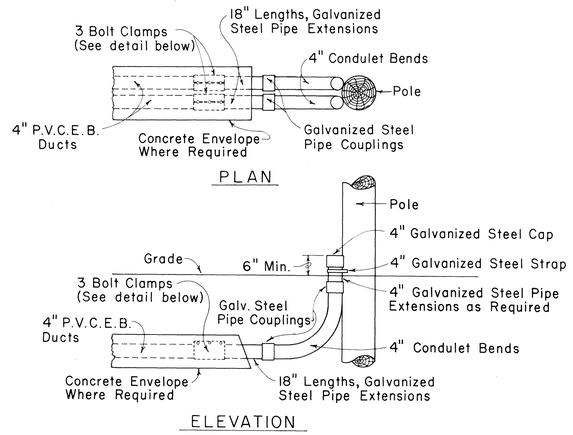

TYPICAL INSTALLATION DETAILS

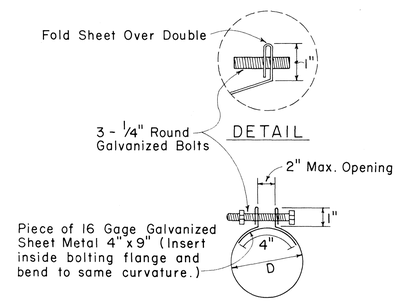

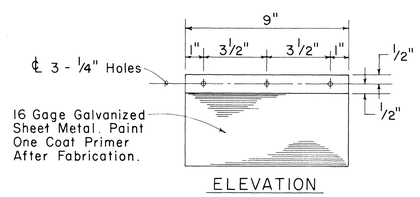

3-BOLT CLAMP ADAPTOR DETAIL

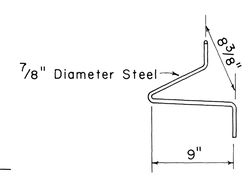

PULLING-IN IRON

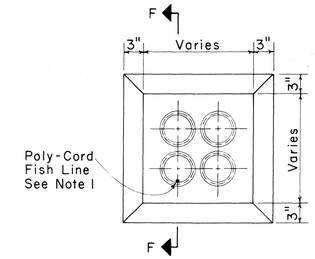

TYPICAL MANHOLE DUCT WINDOW

NOTE:

1. The contractor shall place poly-cord fish line in each duct throughout it's entire length with protrusions of 2 feet in manholes and handholes at each end and 1 foot in pullboxes.

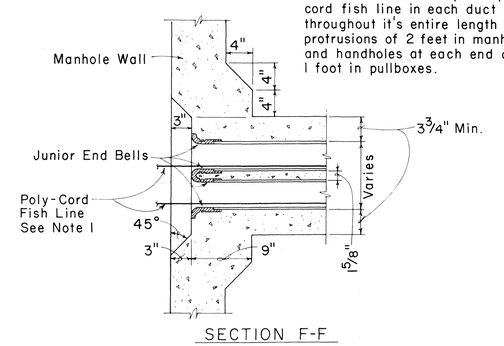

TYPICAL DUCT WINDOW DETAIL & JUNIOR END BELL

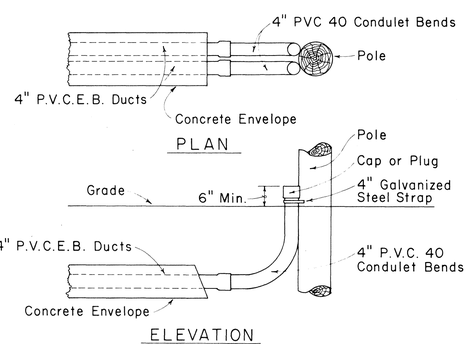

TYPICAL CONDULET BEND INSTALLATION DETAILS

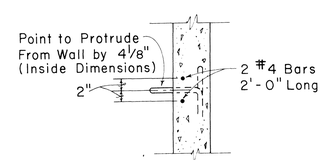

SECTIONAL VIEW OF PULLING-IN-IRON

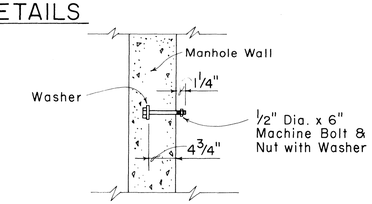

CABLE RACK STUD BOLT DETAIL

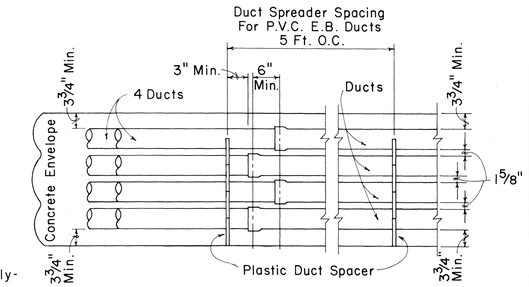

TYPICAL DUCT ENVELOPE ELEVATION ARRANGEMENT OF PLASTIC SPACERS

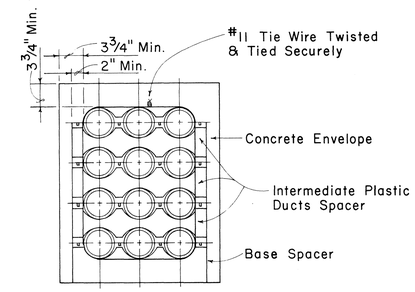

SECTION SHOWING INTER-LOCKING SPACERS

NOTE:

Before placement of concrete contractor shall seal off the crushed rock area with a plastic sheet, to prevent concrete from oozing into 1/4" holes for drainage.

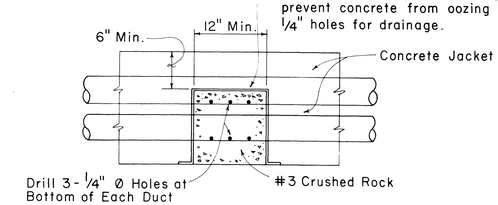

ELEVATION VIEW OF DUCT DRAIN DETAIL

APPROVED:

Hawaiian Telephone Co., Ltd. — 7-8-78 Date

H.T. Co., Ltd. — Drawing No. 34028

STATE OF HAWAII
DEPARTMENT OF TRANSPORTATION
LAND TRANSPORTATION FACILITIES DIVISION

STANDARD DUCT FORMATIONS

Not to Scale — AUG 1978

SHEET No. 36 OF 38 SHEETS

ORIGINAL PLAN — DATE
SURVEY PLOTTED BY
DRAWN BY
TRACED BY
DESIGNED BY
QUANTITIES BY
CHECKED BY
NOTE BOOK No.

HT-1

FED. ROAD DIST. NO.	STATE	FED. AID PROJ. NO.	FISCAL YEAR	SHEET NO.	TOTAL SHEETS
HAWAII	HAW.	F-083-1(10)	1978	85	160

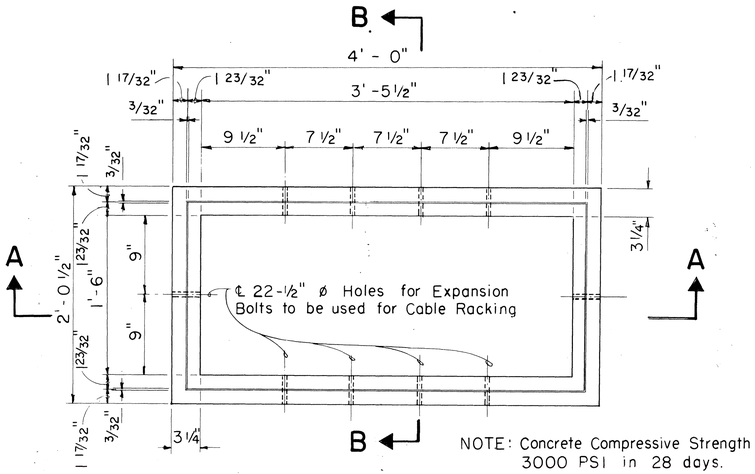

PLAN

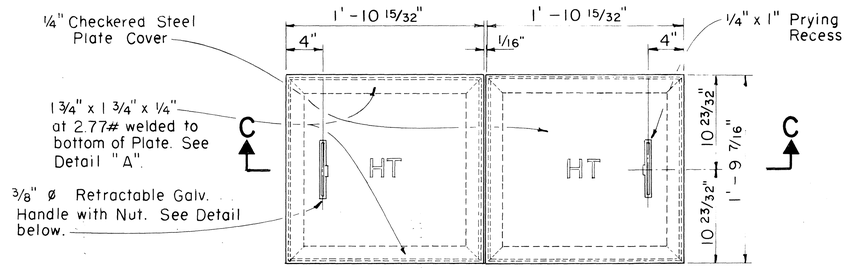

PLAN

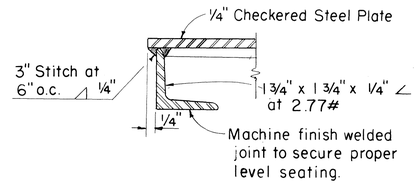

DETAIL A

SCALE: 6" = 1'-0"

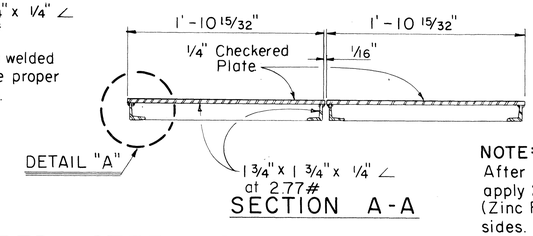

SECTION A-A

NOTE:
After Fabrication of Cover, apply 2 coats of ZRC (Zinc Rich Coating) to both sides.

INSTALLATION NOTES:

1. A minimum of Two(2) Precast Sections must be used on all installations.
2. The minimum layers of Bricks to be used shall always be at least One (1) layer lower than the lowest Duct entering the Pullbox. At no time, however, shall there be less than Two (2) layers of Bricks on each installation.
3. At no time shall Cement Mortar, Wood or any other material be used between Precast Sections. Leveling or raising of Boxes to grade must be done at Brickwork Section using Cement Mortar. The permanent installation of Wooden Wedges to accomplish this purpose will not be accepted.
4. For 3-Cover P.B. join 435TB P.B. Half Section to Full Section using Strap and Bolts as shown in 3-Cover P.B. Section Plan.

CHECKERED STEEL PLATE COVERS

FOR LIGHT LOADING AREAS-APPROX. WT. 55 LBS.

SCALE: 1 1/2" = 1'-0" (EXCEPT AS NOTED)

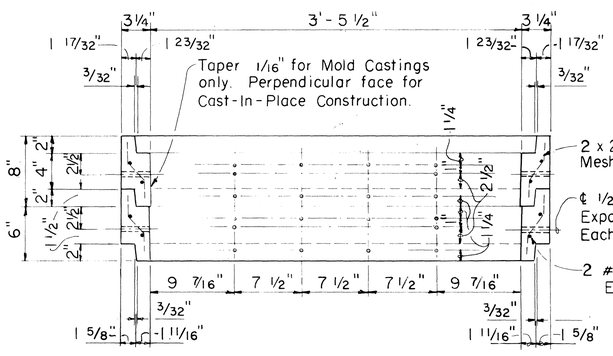

SECTION A-A

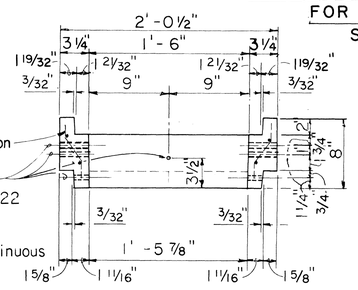

SECTION B-B

PULLBOX #435 T-B

SCALE: 1 1/2" = 1'-0"

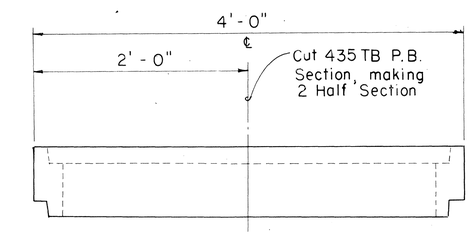

435TB P. B. SECTION

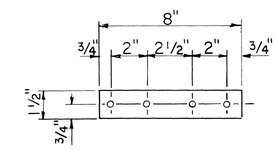

STRAP DETAIL

1/4" BAR

SCALE: 3" = 1'- 0"

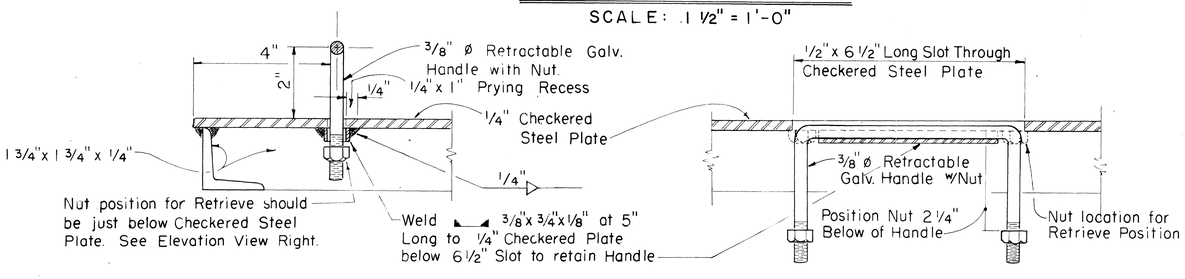

SECTION-RETRIEVE POSITION

ELEVATION-AT REST POSITION

RETRACTABLE HANDLE

SCALE: 6" = 1'-0"

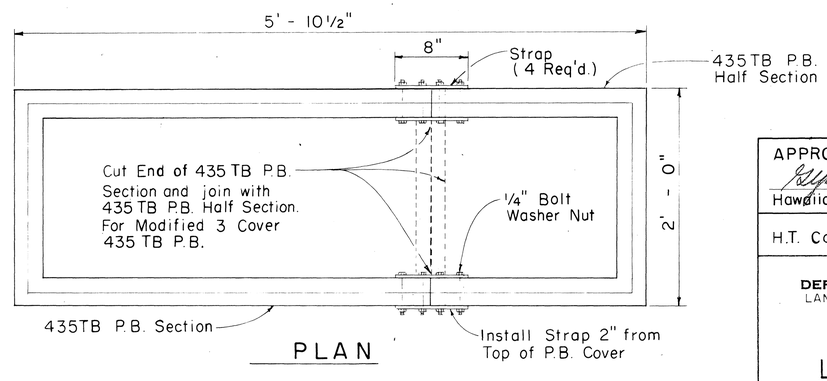

PLAN

MODIFIED 3-COVER P.B. SECTION

APPROVED:

Hawaiian Telephone Co., Ltd. — 9-8-78 Date

H.T. Co., Ltd. — Drawing No. 34056

STATE OF HAWAII
DEPARTMENT OF TRANSPORTATION
LAND TRANSPORTATION FACILITIES DIVISION

LARGE PULLBOX NO. 435 T-B

AUG 1978

SHEET No. 37 OF 38 SHEETS

ORIGINAL PLAN		DATE
NOTE BOOK	SURVEY PLOTTED BY	
	DRAWN BY	
	TRACED BY	
	DESIGNED BY	
	QUANTITIES BY	
	CHECKED BY	
No.		

FED. ROAD DIST. NO.	STATE	FED. AID PROJ. NO.	FISCAL YEAR	SHEET NO.	TOTAL SHEETS
HAWAII	HAW.	F-083-1(10)	1978	86	160

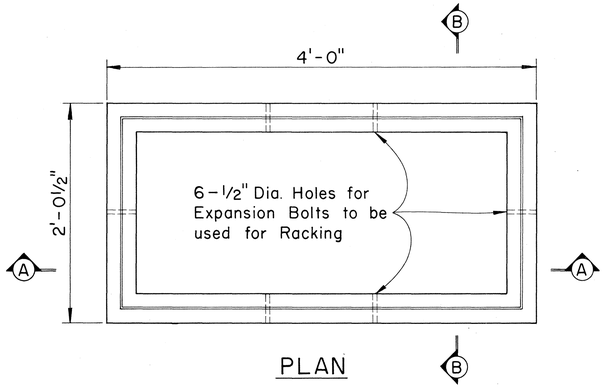

PLAN

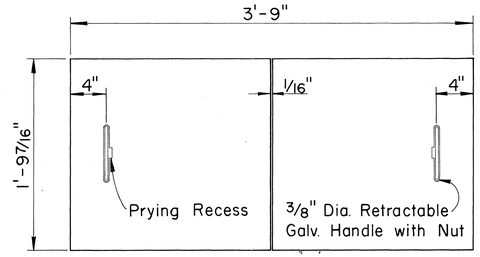

COVER

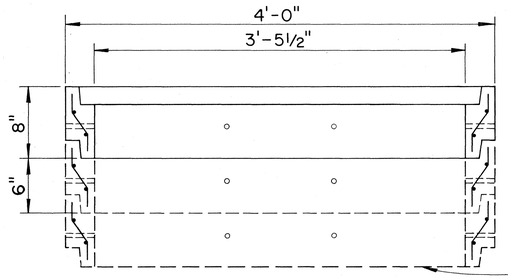

SECTION "A-A"

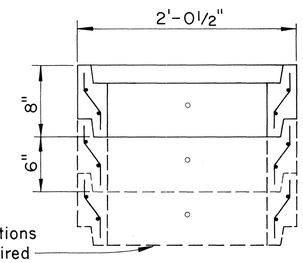

SECTION "B-B"

Additional Sections added as required

DETAIL OF LARGE PULL BOX NO. 435T-B

Scale: 1 1/2" = 1'-0"

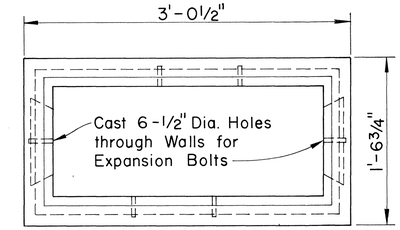

PLAN

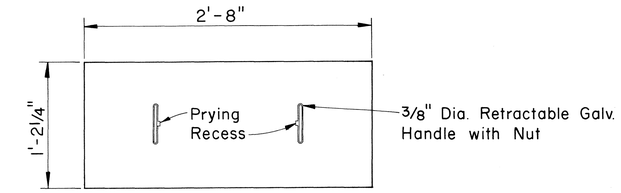

COVER

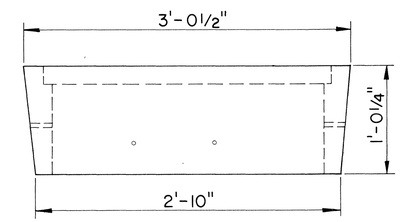

SIDE ELEVATION

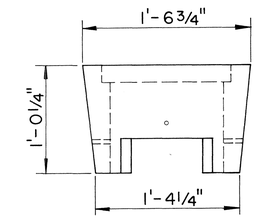

END ELEVATION

DETAIL OF SMALL PULL BOX NO. 434T

Scale: 1 1/2" = 1'-0"

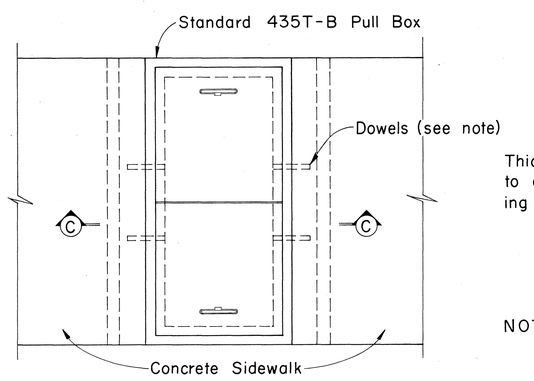

PLAN

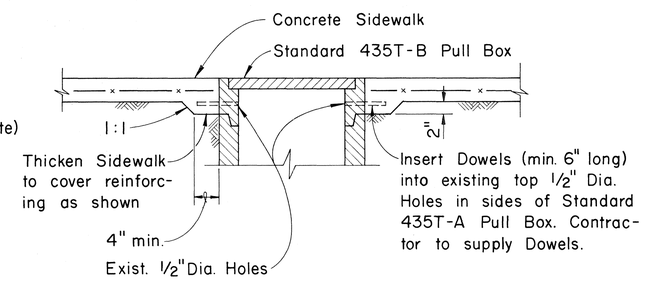

NOTE: Dowels shall be used only where the Sidewalk is as wide or narrower than the Pull Box.

SECTION "C-C"

INSTALLATION DETAIL OF PULL BOX NO. 435T-B IN SIDEWALK AREAS

Scale: 1" = 1'-0"

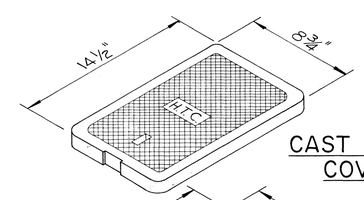

CAST IRON COVER

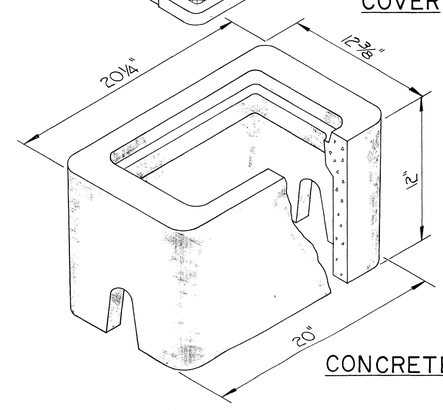

CONCRETE BOX

TYPE "B" METER BOX, NO. 436T

Not to Scale

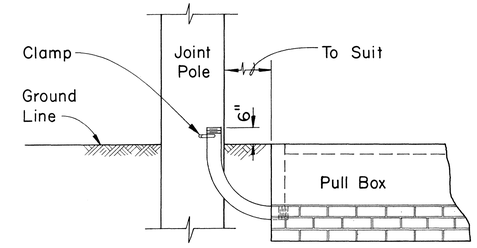

TYPICAL 90° CONDUIT BEND TO POLE

Not to Scale

APPROVED:

K. Yamada 9-8-78

Hawaiian Telephone Co., Ltd. Date

STATE OF HAWAII
DEPARTMENT OF TRANSPORTATION
LAND TRANSPORTATION FACILITIES DIVISION

STANDARD DETAILS

TELEPHONE PULL BOXES NOS. 435T-B, 434T, & 436T

Scale: As Shown Date: AUG 1978

SHEET No. 38 OF 38 SHEETS

ORIGINAL PLAN	SURVEY PLOTTED BY	DATE
	DRAWN BY	"
	TRACED BY	"
NOTE BOOK	DESIGNED BY	"
	QUANTITIES BY	"
No.	CHECKED BY	"