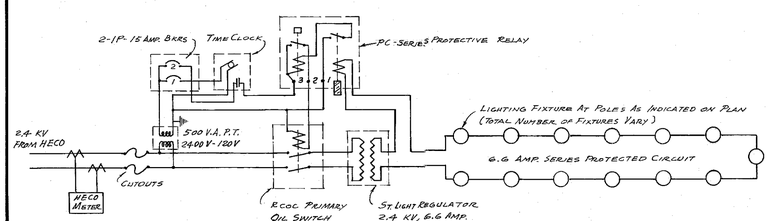

WIRING DIAGRAM

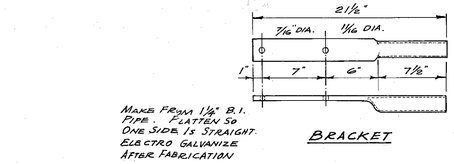

BRACKET

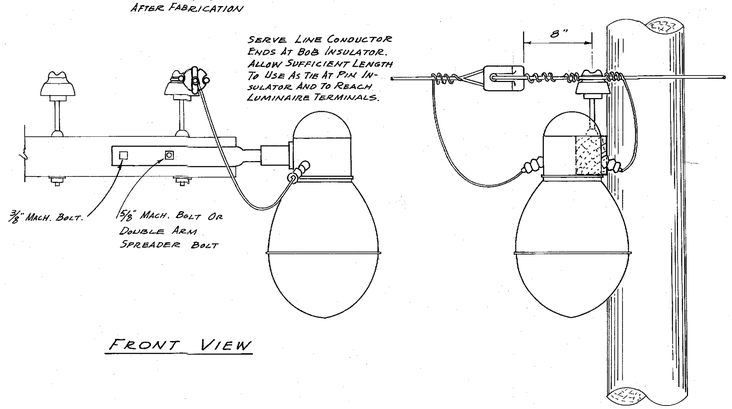

FRONT VIEW

SIDE VIEW

TYP. LUMINAIRE MOUNTING DETAILS

N. T. S.

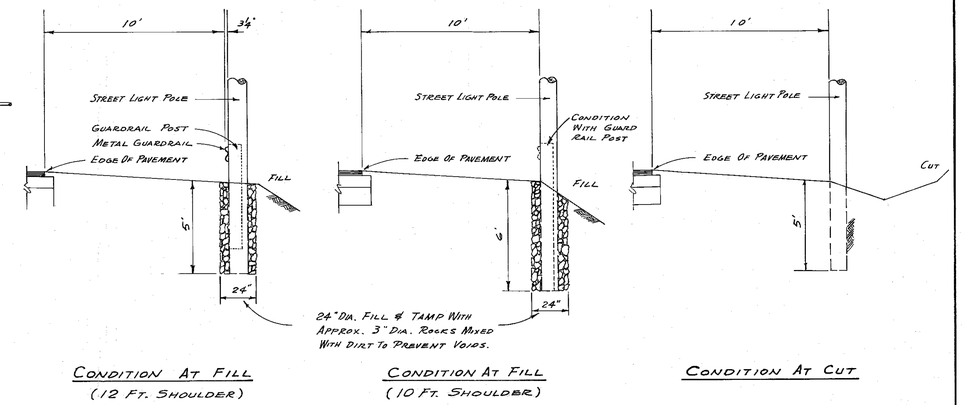

CONDITION AT FILL (12 FT. SHOULDER)

CONDITION AT FILL (10 FT. SHOULDER)

CONDITION AT CUT

POLE MOUNTING DETAILS

SCALE: 1" = 4'-0"

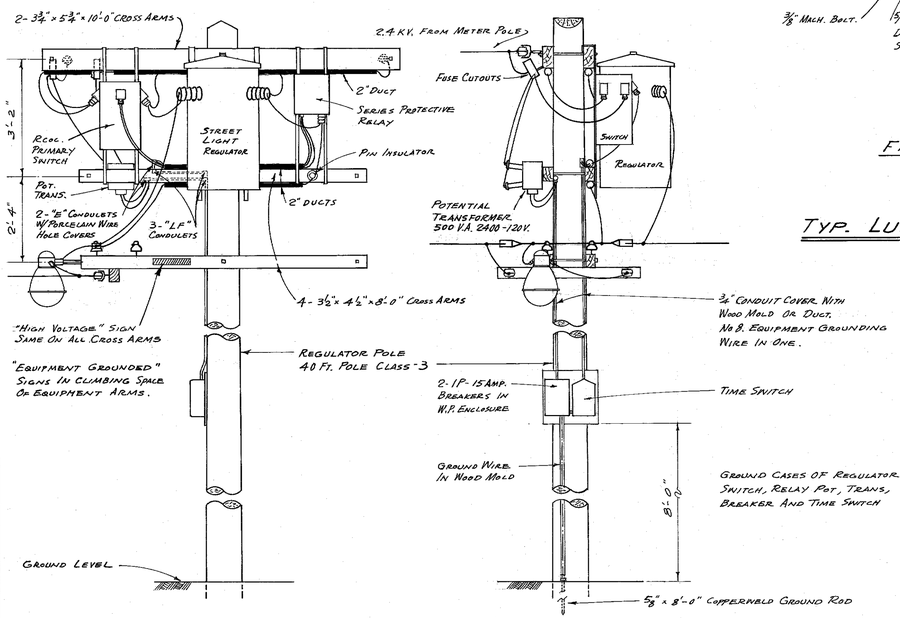

FRONT VIEW

SIDE VIEW

REGULATOR POLE

N. T. S.

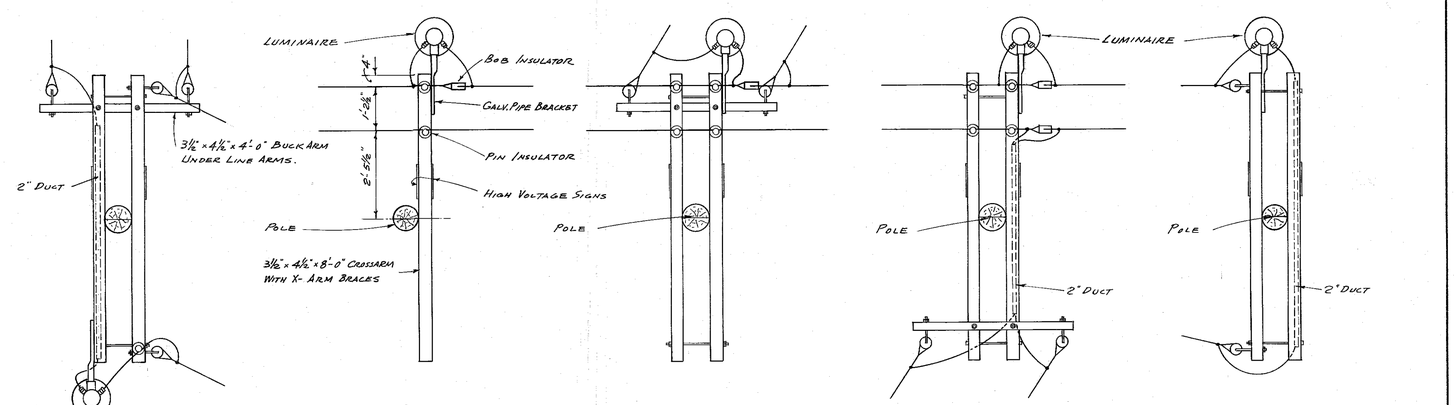

FIG. 1 FIG. 2 FIG. 3 FIG 4 FIG 5

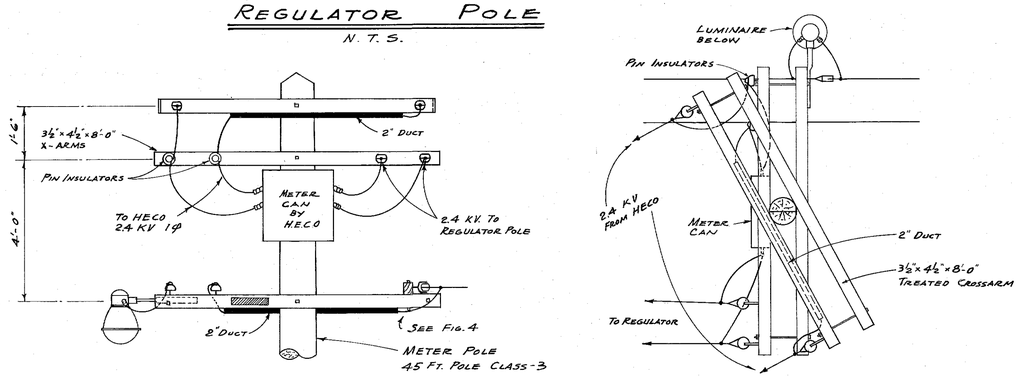

FRONT VIEW

PLAN VIEW

METER POLE

N. T. S.

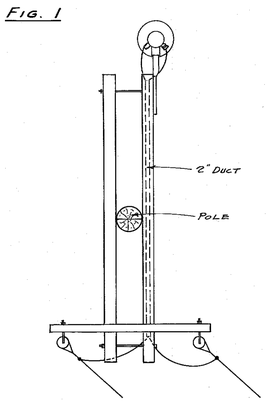

FIG. 6

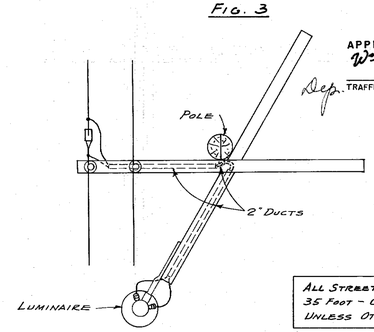

FIG. 7

ALL STREET LIGHT POLES SHALL BE 35 FOOT - CLASS 5 WOODEN POLES, UNLESS OTHERWISE INDICATED.

TYP. POLE CONFIGURATIONS

N. T. S.

PREPARED BY C. SHAK, ELECTRICAL ENGINEER, HAWAII REGISTRATION NO. 759

APPROVED BY William O. Hong 8/29/62
Dep. TRAFFIC ENGINEER, DEPT. OF TRAFFIC C & C OF HONOLULU DATE

PROPERTY OF DIVISION OF ENGINEERING

JOB NO. 12-63

REVISION DATE	DESCRIPTION	MADE BY	APPROVED

COMMUNITY PLANNING INCORPORATED
CIVIL ENGINEERS — SURVEYORS — CONSULTANT PLANNERS

DEPARTMENT OF PUBLIC WORKS
CITY AND COUNTY OF HONOLULU
DIVISION OF ENGINEERING
IMPROVEMENT DISTRICT NO. 168
KAHALUU CUTOFF ROAD
KANEOHE, HEEIA, AHUIMANU & KAHALUU, KOOLAUPOKO, OAHU

STREET LIGHTING DETAILS

ENGINEER C.S. DATE FINAL REPORT 6-27-63
DRAFTSMAN E.W. DATE 8-1-62
SCALE AS SHOWN CHECKED BY
APPROVED TRACER E.W.
CHIEF ENGINEER APPROVED 9/28/62
ASST. DIRECTOR, DIVISION OF ENGINEERING

W.S.	PROFILE	C.SR.
CR. SEC.	F.B.	S.B.
V.M. BY:	F.W. BY:	S.BY:

APPROVED REG. ENGR. CERT. NO. 759

SHEET 59 OF 62 SHEETS

FILE	POCKET	FOLDER	NO.
12	3	3	59