FED. ROAD DIST. NO.	STATE	PROJ. NO.	FISCAL YEAR	SHEET NO.	TOTAL SHEETS
HAWAII	HAW.	HWY-0-07-18	2020	8	25

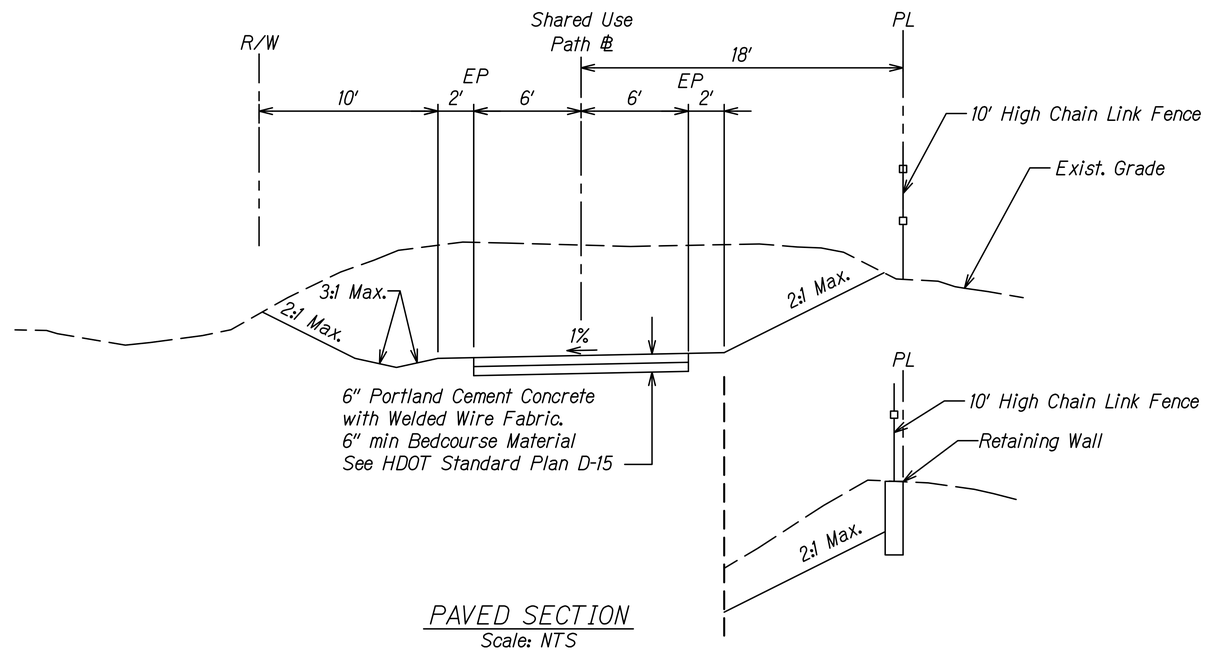

PAVED SECTION
Scale: NTS

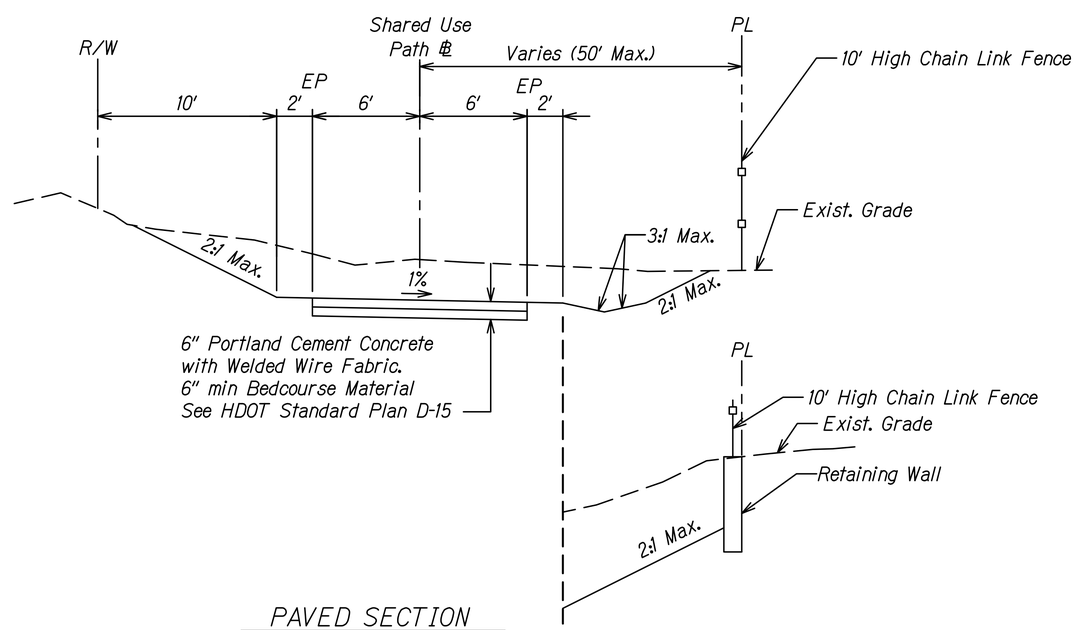

PAVED SECTION
Scale: NTS

ORIGINAL PLAN	SURVEY	PLOTTED BY	DATE
	DRAWN BY		
	TRACED BY		
NOTE BOOK	DESIGNED BY		
	QUANTITIES BY		
No.	CHECKED BY		

STATE OF HAWAII
DEPARTMENT OF TRANSPORTATION
HIGHWAYS DIVISION

TYPICAL SECTION

WAHIAWA PEDESTRIAN BRIDGE
WHITMORE VILLAGE TO WAHIAWA
PROJ. No. HWY-0-07-18

Scale: NTS Date: June 2020

SHEET No. T-1 OF 3 SHEETS

FED. ROAD DIST. NO.	STATE	PROJ. NO.	FISCAL YEAR	SHEET NO.	TOTAL SHEETS
HAWAII	HAW.	HWY-0-07-18	2020	9	25

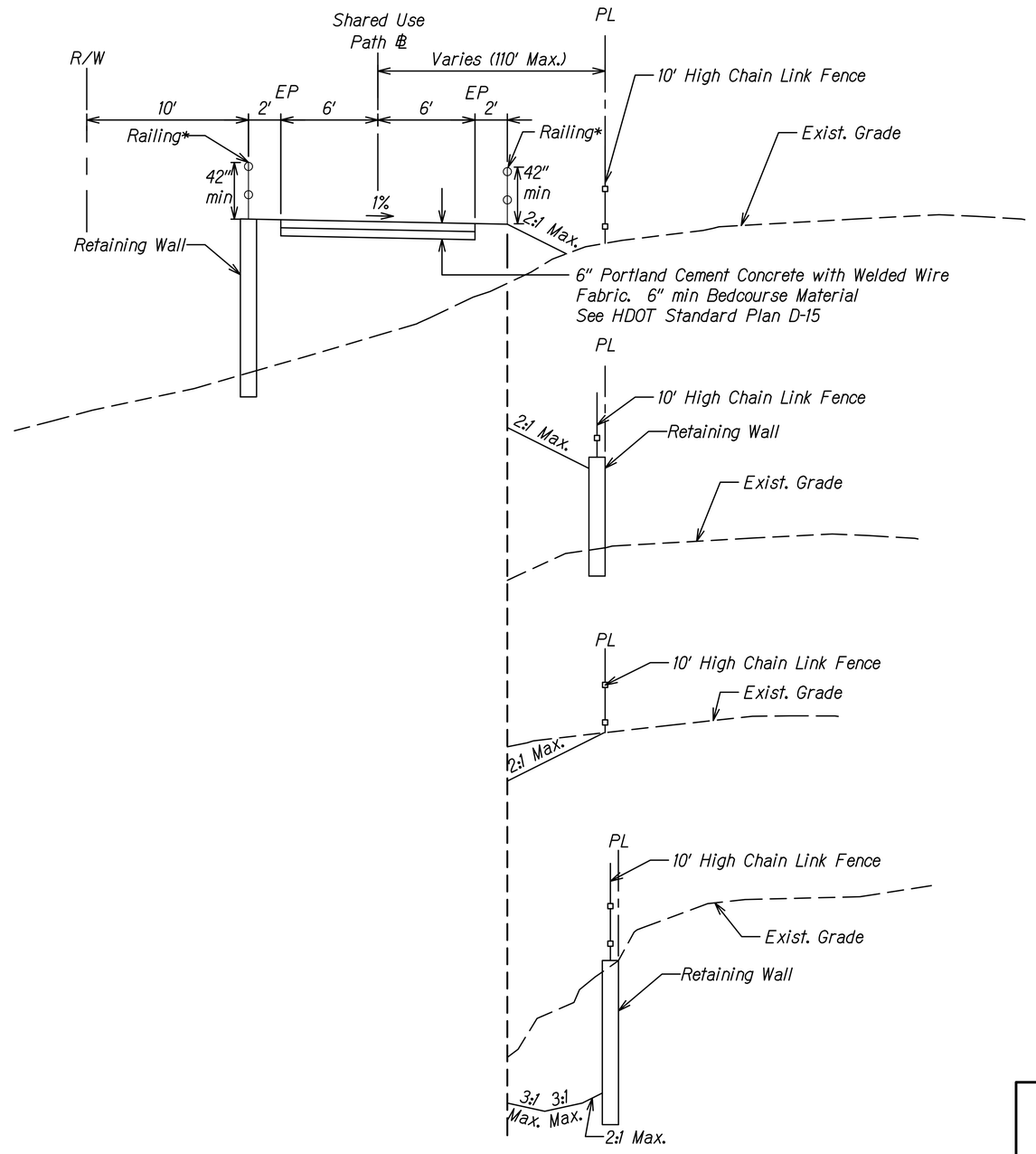

*Railing required for fill slopes 2:1 or steeper with a drop of 4' or more, or for fill slopes 3:1 or greater with a drop of 6' or more

RETAINING WALL SECTIONS
Scale: NTS

ORIGINAL PLAN	SURVEY PLOTTED BY	DATE
	DRAWN BY	
	TRACED BY	
NOTE BOOK	DESIGNED BY	
	QUANTITIES BY	
No.	CHECKED BY	

STATE OF HAWAII
DEPARTMENT OF TRANSPORTATION
HIGHWAYS DIVISION

TYPICAL SECTION

WAHIAWA PEDESTRIAN BRIDGE
WHITMORE VILLAGE TO WAHIAWA
PROJ. No. HWY-0-07-18

Scale: NTS Date: June 2020

SHEET No. T-2 OF 3 SHEETS

FED. ROAD DIST. NO.	STATE	PROJ. NO.	FISCAL YEAR	SHEET NO.	TOTAL SHEETS
HAWAII	HAW.	HWY-0-07-18	2020	10	25

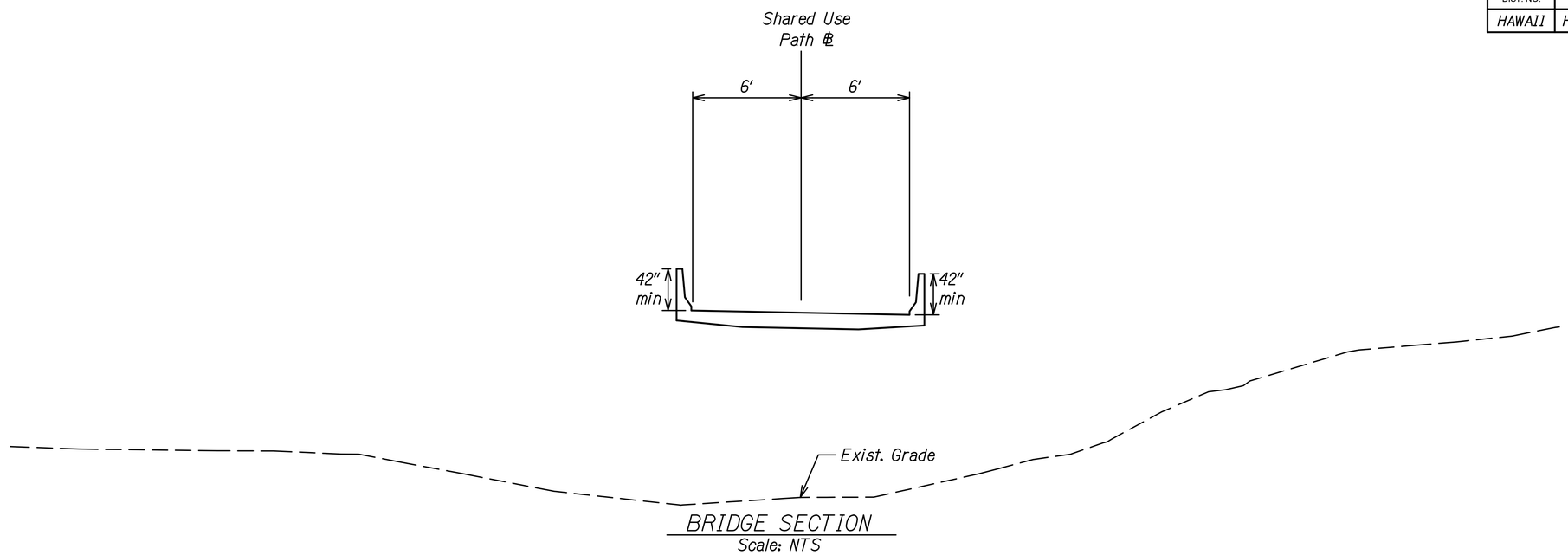

BRIDGE SECTION
Scale: NTS

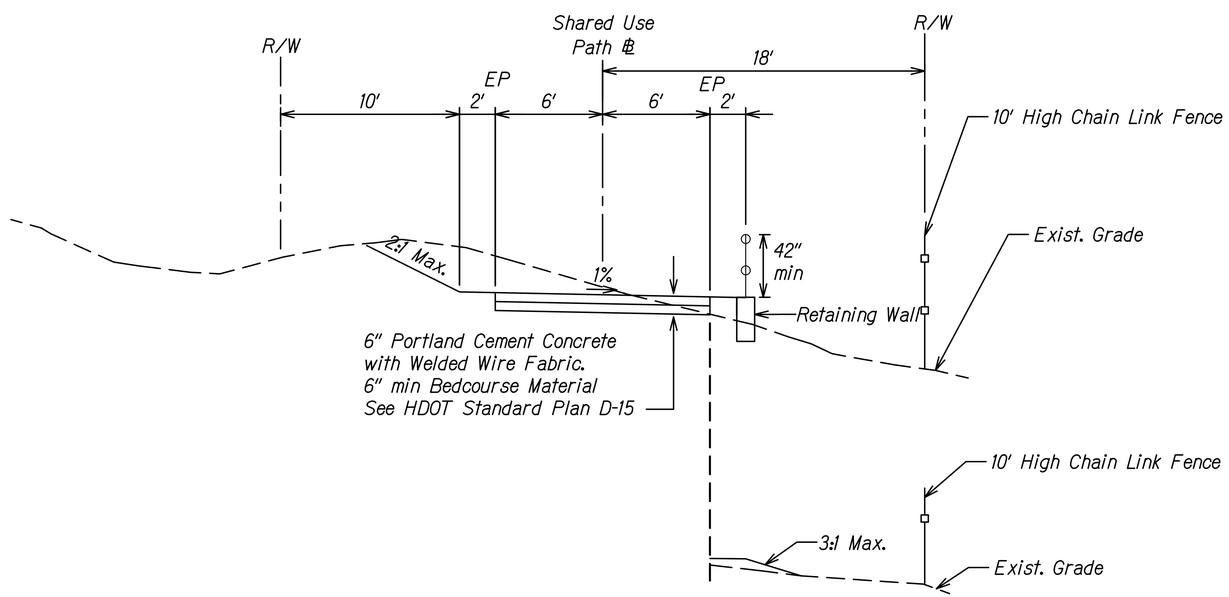

PAVED SECTION
Scale: NTS

ORIGINAL PLAN	SURVEY PLOTTED BY	DATE
	DRAWN BY	
	TRACED BY	
NOTE BOOK	DESIGNED BY	
	QUANTITIES BY	
No.	CHECKED BY	

STATE OF HAWAII
DEPARTMENT OF TRANSPORTATION
HIGHWAYS DIVISION

TYPICAL SECTION

WAHIAWA PEDESTRIAN BRIDGE
WHITMORE VILLAGE TO WAHIAWA
PROJ. No. HWY-0-07-18

Scale: NTS Date: June 2020

SHEET No. T-3 OF 3 SHEETS