FED. ROAD DIST. NO.	STATE	FED. AID PROJ. NO.	FISCAL YEAR	SHEET NO.	TOTAL SHEETS
HAWAII	HAW.	BR-F-080-1(7)	1977	57	165

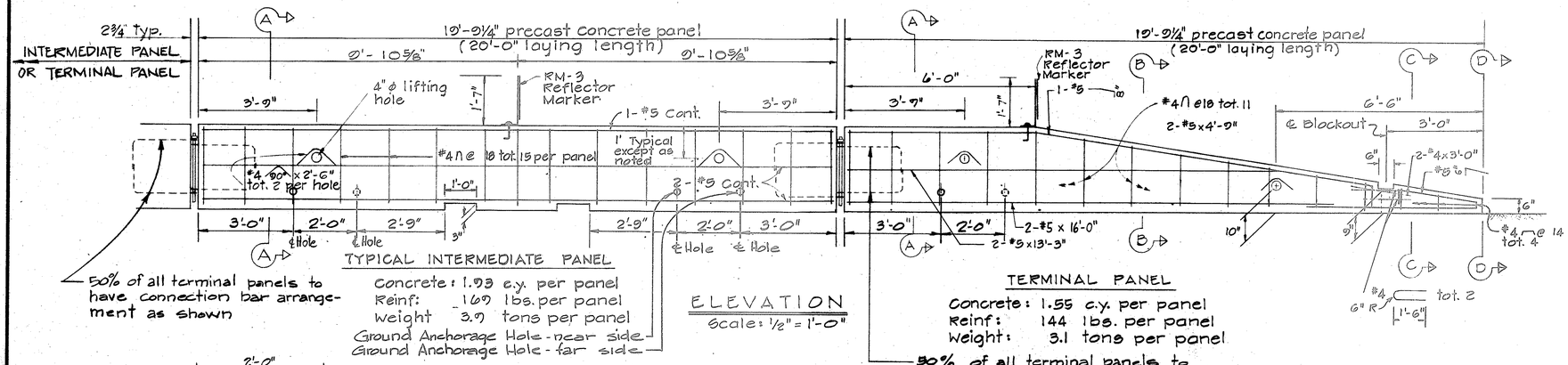

TYPICAL INTERMEDIATE PANEL

Concrete: 1.93 c.y. per panel
Reinf: 160 lbs. per panel
Weight 3.9 tons per panel

ELEVATION

Scale: ½" = 1'-0"

TERMINAL PANEL

Concrete: 1.55 c.y. per panel
Reinf: 144 lbs. per panel
Weight: 3.1 tons per panel

50% of all terminal panels to have connection bar arrangement as shown

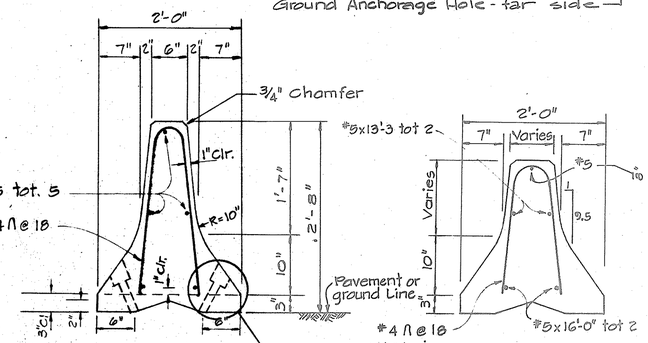

SECTION "A-A"

GROUND ANCHORAGE (Typical)

SECTION "B-B"

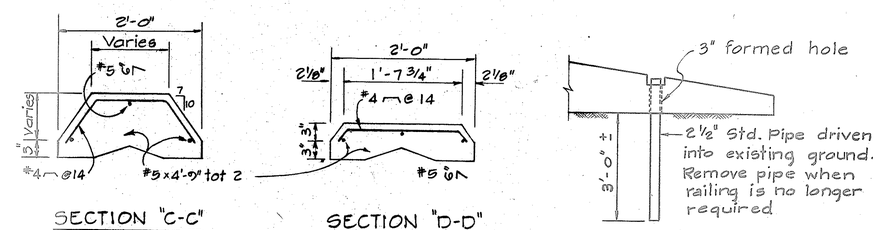

SECTION "C-C"

SECTION "D-D"

SECTIONS

Scale: 1" = 1'-0"

GROUND ANCHORAGE FOR RAMPED END OF TERMINAL PANEL

Scale: ½" = 1'-0"

NOTES

1. For details not shown in Sections BB, C-C, & D-D, see Section A-A
2. Reflector Marker shall not be paid for separately but shall be considered incidental to "Portable Concrete Guard Rail."
3. Concrete shall be Class "A".
4. All bolts to have cut washers unless otherwise noted.
5. Portable Concrete Guard Rails shall be constructed as shown to accomodate grounding anchorages, however anchoring with steel pins will not be allowed.

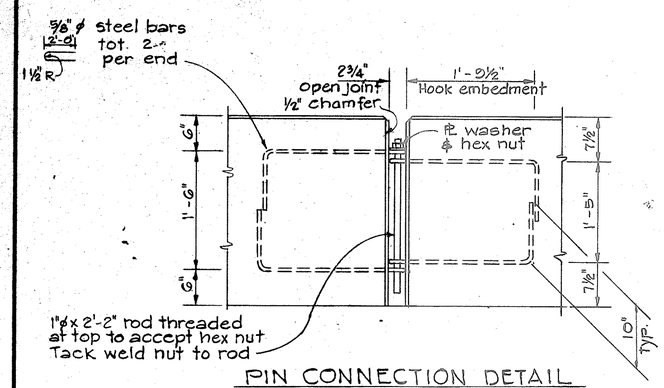

PIN CONNECTION DETAIL

Scale: 1" = 1'-0"

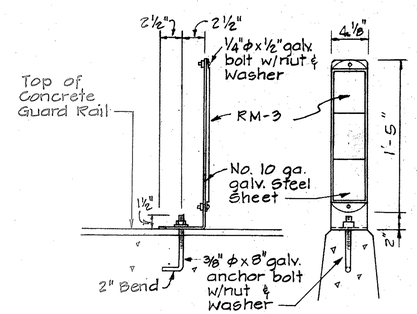

SIDE

FRONT

REFLECTOR MARKER MOUNTING DETAIL

Scale: 1½" = 1'-0"

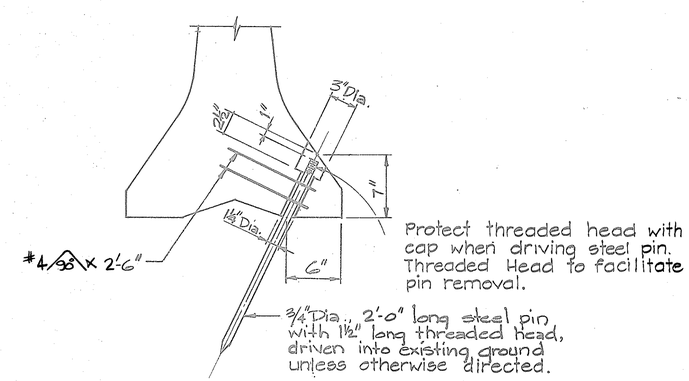

DETAIL A - GROUND ANCHORAGE

Scale: 1½" = 1'-0"

STATE OF HAWAII
DEPARTMENT OF TRANSPORTATION
HIGHWAYS DIVISION

PORTABLE CONCRETE GUARD RAIL TYPICAL DETAILS

PROJ. No. BR-F-080-1(7)

Scale: As Noted Date: August, 1976

SHEET No. 1 OF 1 SHEETS

ORIGINAL PLAN | SURVEY PLOTTED BY | DRAWN BY | TRACED BY | DESIGNED BY | QUANTITIES BY | CHECKED BY | NOTE BOOK | No. | DATE

57