FED. ROAD DIST. NO.	STATE	PROJ. NO.	FISCAL YEAR	SHEET NO.	TOTAL SHEETS
HAWAII	HAW.	808-02-68	1968	4	15

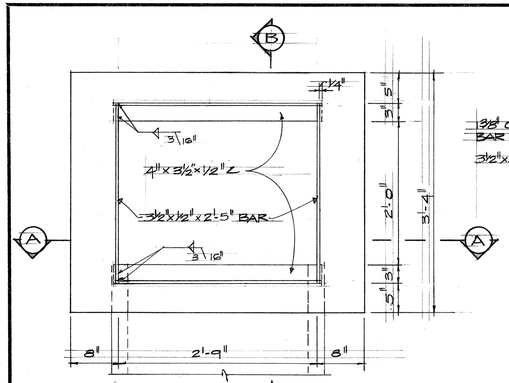

FRAME
SCALE - 1" = 1'-0"

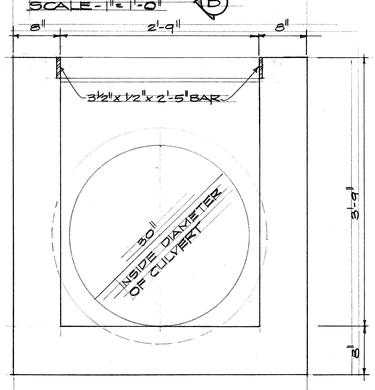

SECTION "A-A"
SCALE - 1" = 1'-0"

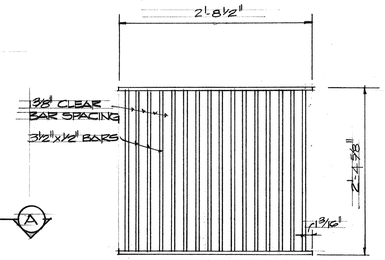

GRATE
SCALE - 1" = 1'-0"

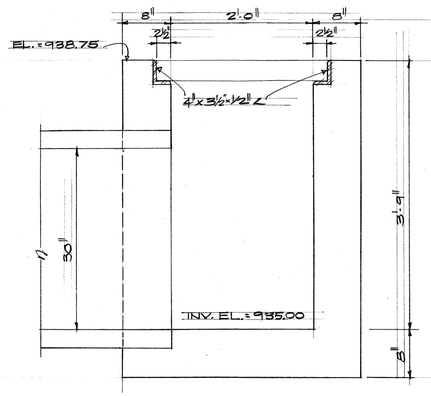

SECTION - "B-B"
SCALE - 1" = 1'-0"

DETAIL OF CONCRETE DROP INTAKE AND TYPE "S" STEEL FRAME & GRATE

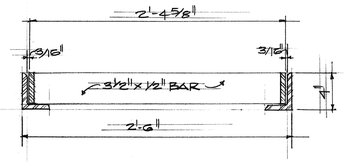

LONGITUDINAL SECTION
(THRU FRAME AND GRATE)
SCALE - 1½" = 1'-0"

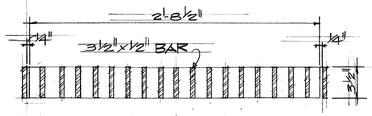

CROSS SECTION
(THRU FRAME AND GRATE)
SCALE - 1½" = 1'-0"

NOTE:

1. ALL WELDS 3/8" UNLESS OTHERWISE NOTED.
2. ALL STEEL SHALL BE STRUCTURAL GRADE.
3. GRATE AND FRAME SHALL BE HOT DIP GALVANIZED AFTER FABRICATION IN ACCORDANCE WITH SECTION 44(H) OF THE STANDARD SPECIFICATIONS.

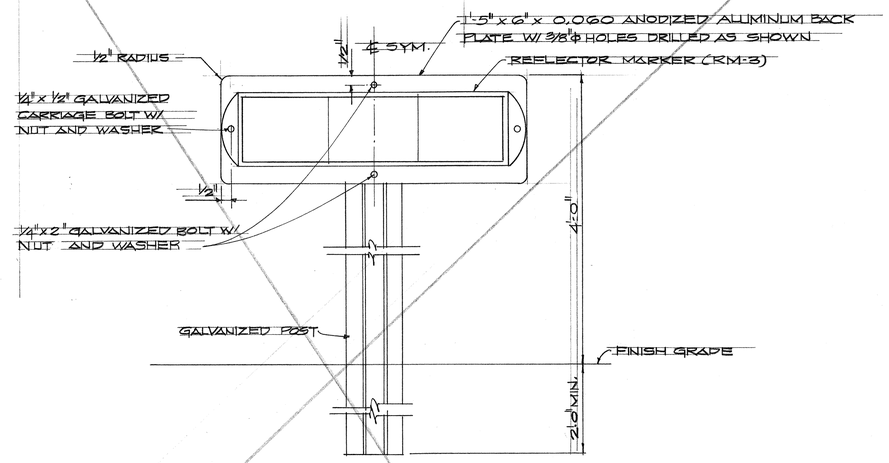

TYPICAL DETAIL

HORIZONTAL REFLECTOR MARKER
NOT TO SCALE

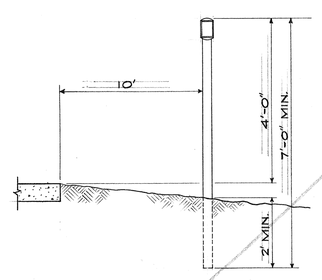

ROAD DELINEATOR
SCALE: ½" = 1'-0"

GALV. FLANGED CHANNEL ⅛"x3/16" ROLLED SECTION POST WITH A MIN. WT. OF 2 LBS. PER FT. UPPER 2 FT. SHALL HAVE A SINGLE ROW OF 3/8" HOLES CENTERED IN THE WEB 4 AT 1" O.C.

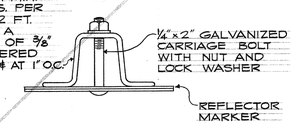

NOTE: REFLECTOR MARKERS RM-1 SHALL BE GLASS SPHERE REFLECTOR MARKERS WITH 4"x5" REFLECTOR UNITS (AS SHOWN) OR PLASTIC PRISMATIC REFLECTOR MARKERS WITH 3" DIAMETER REFLECTOR UNITS.

GALV. 1½" x 1½" SQUARE TUBE POSTS WITH MIN. WT. OF 1.7 LBS./FT.

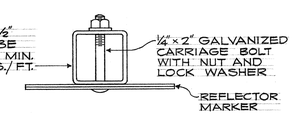

TYPICAL SECTION OF ROAD DELINEATOR
HALF SIZE

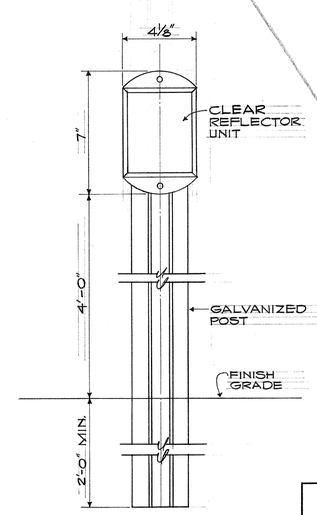

RM-1

REFLECTOR MARKER
NOT TO SCALE

OMIT

JOHN B. K. SUR
REGISTERED PROFESSIONAL ENGINEER
No. 806-E
HAWAII, U.S.A.

THIS WORK WAS PREPARED BY ME OR UNDER MY SUPERVISION.

STATE OF HAWAII
DEPARTMENT OF TRANSPORTATION
HIGHWAYS DIVISION

DRAINAGE DETAILS

INTERSECTION IMPROVEMENT, KAMEHAMEHA HIGHWAY AT WHITMORE AVENUE
PROJECT NO. 808-02-68

Scale: As shown Date: May 22, 1968

SHEET No. 1 OF 1 SHEETS

ORIGINAL PLAN		
	SURVEY PLOTTED BY	DATE
	TRACED BY	"
	DESIGNED BY	"
NOTE BOOK	QUANTITIES BY	"
	CHECKED BY	"
No.		

PRINTED ON NO. 1000H CLEARPRINT

4