FED. ROAD DIST. NO.	STATE	FED. AID PROJ. NO.	FISCAL YEAR	SHEET NO.	TOTAL SHEETS
HAWAII	HAW.	CMAQ-076-1(19)	2006	24	58

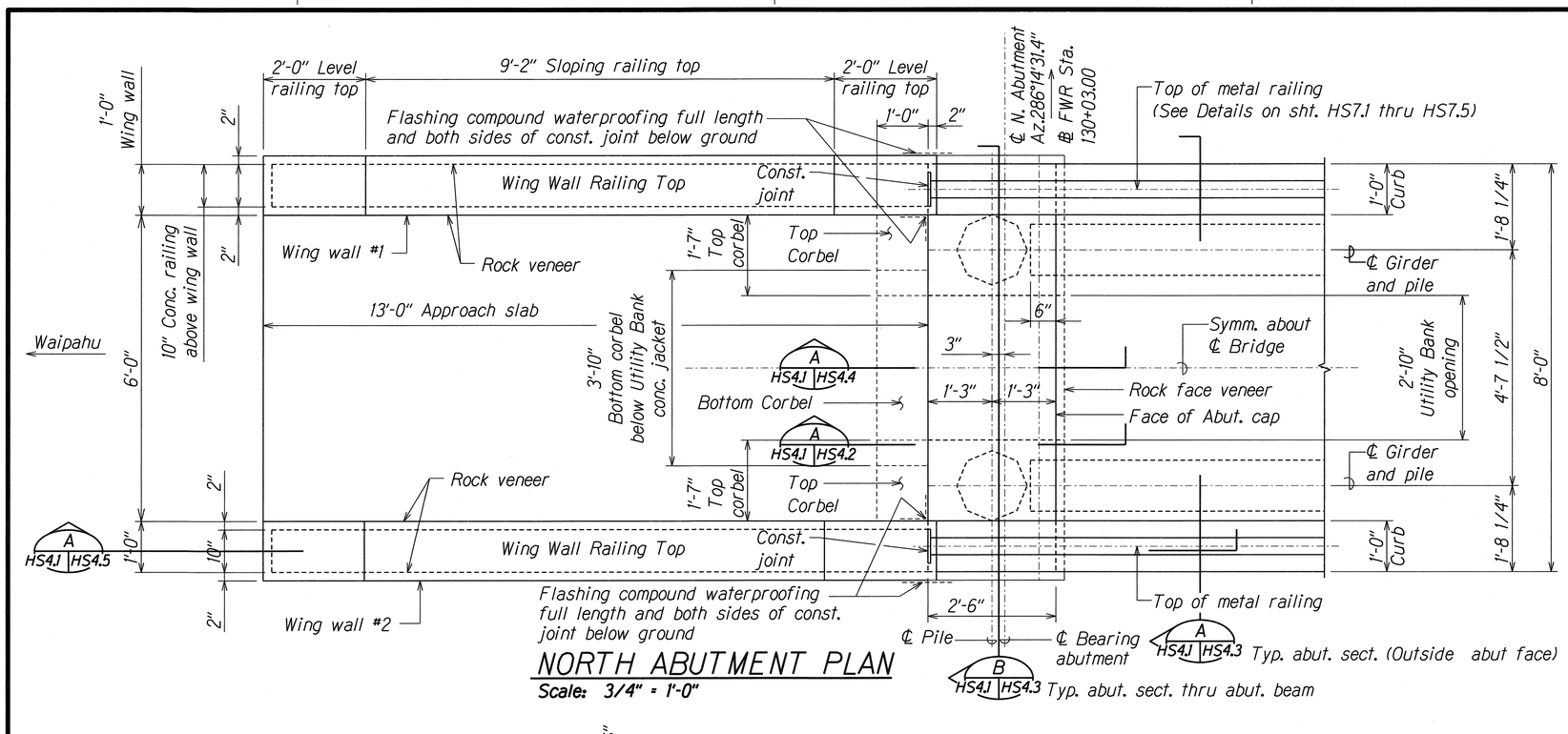

NORTH ABUTMENT PLAN

Scale: 3/4" = 1'-0"

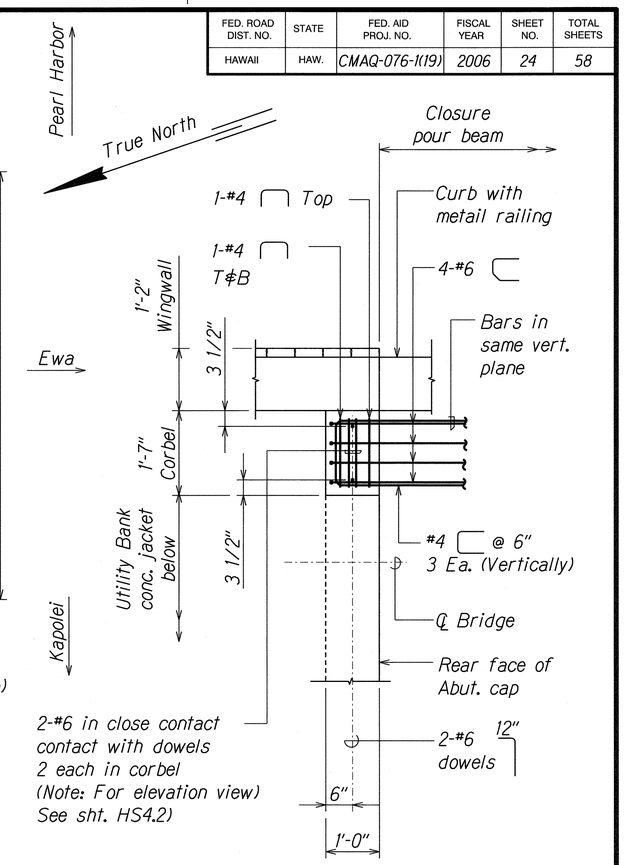

TYPICAL UPPER CORBEL PLAN

Scale: 3/4" = 1'-0"

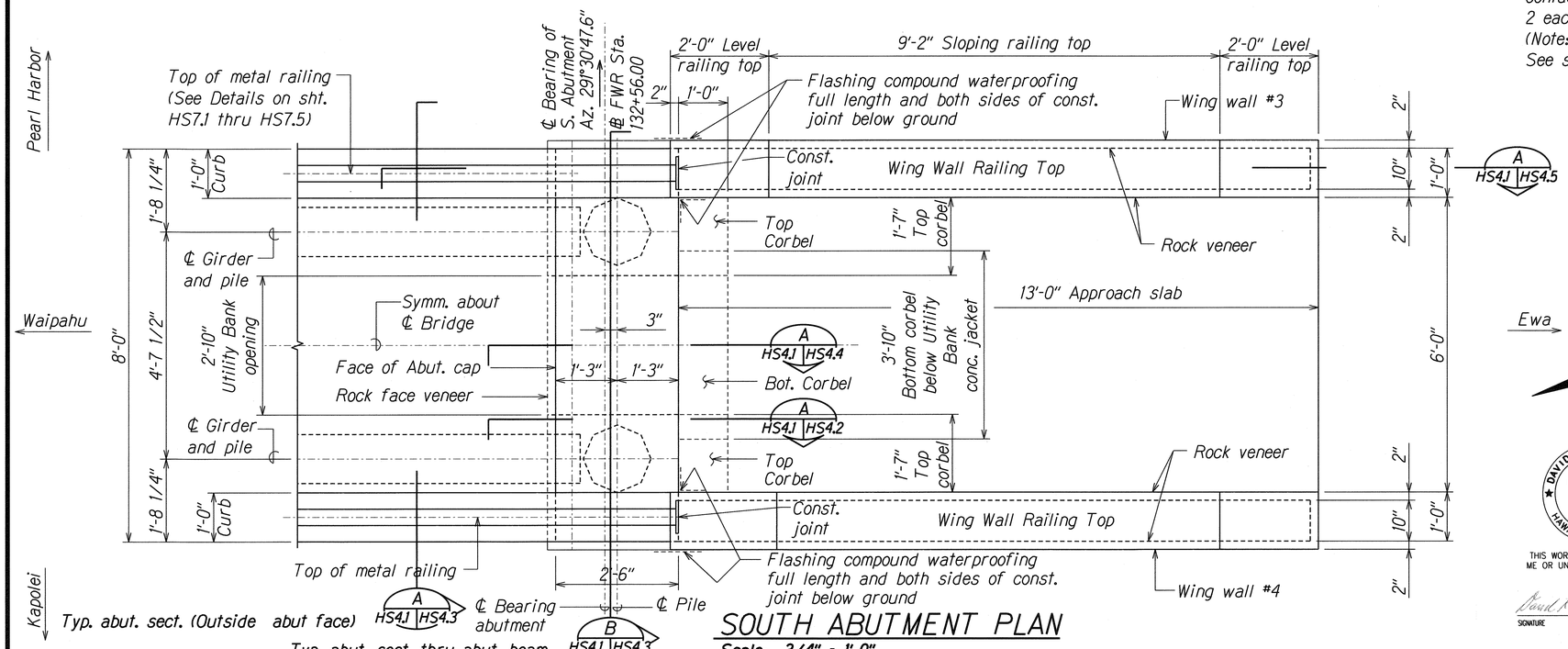

SOUTH ABUTMENT PLAN

Scale: 3/4" = 1'-0"

DATE	REVISION
9/30/09	3 As Built

DAVID K. FUJIMARA LICENSED PROFESSIONAL ENGINEER NO. 8104-S HAWAII, U.S.A.

THIS WORK WAS PREPARED BY ME OR UNDER MY SUPERVISION.

SIGNATURE — EXPIRATION DATE OF THE LICENSE 4-30-08

STATE OF HAWAII
DEPARTMENT OF TRANSPORTATION
HIGHWAYS DIVISION

ABUTMENT & WING WALL PLANS

Fort Weaver Road Widening
Honouliuli Stream Pedestrian Bridge
Vicinity of Aawa Drive to Geiger Road
Federal Aid Project No. CMAQ-076-1(9)

Scale: As Shown — Date: Feb. 29, 2008

SHEET No. HS4.1 OF 33 SHEETS

ORIGINAL PLAN — SURVEY PLOTTED BY — DRAWN BY — TRACED BY — DESIGNED BY — QUANTITIES BY — CHECKED BY — DATE — NOTE BOOK No.

AS-BUILT

FED. ROAD DIST. NO.	STATE	FED. AID PROJ. NO.	FISCAL YEAR	SHEET NO.	TOTAL SHEETS
HAWAII	HAW.	CMAQ-076-1(19)	2006	25	58

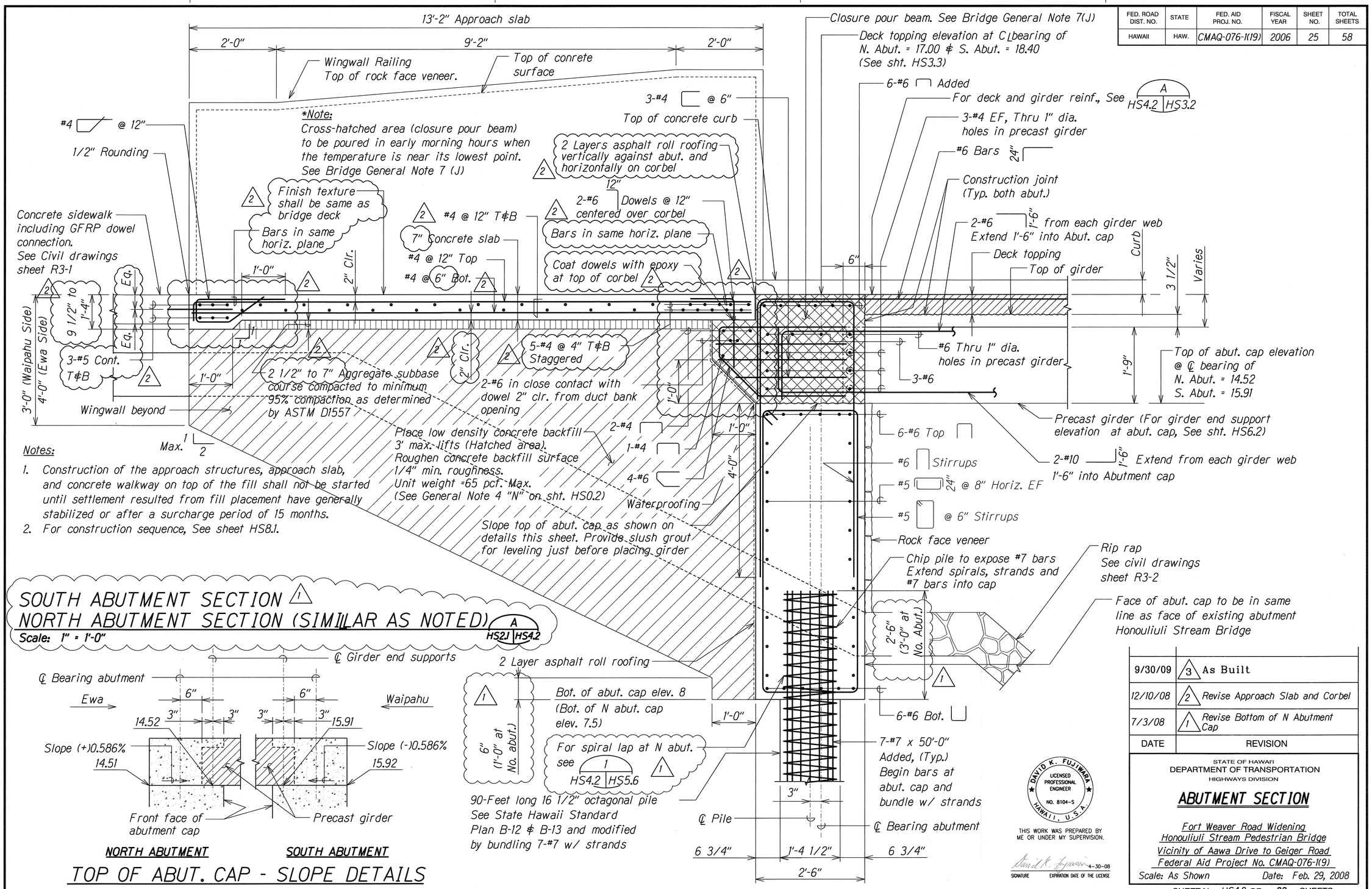

Notes:

1. Construction of the approach structures, approach slab, and concrete walkway on top of the fill shall not be started until settlement resulted from fill placement have generally stabilized or after a surcharge period of 15 months.
2. For construction sequence, See sheet HS8.1.

DATE	REVISION
9/30/09	3 As Built
12/10/08	2 Revise Approach Slab and Corbel
7/3/08	1 Revise Bottom of N Abutment Cap

STATE OF HAWAII
DEPARTMENT OF TRANSPORTATION
HIGHWAYS DIVISION

ABUTMENT SECTION

Fort Weaver Road Widening
Honouliuli Stream Pedestrian Bridge
Vicinity of Aawa Drive to Geiger Road
Federal Aid Project No. CMAQ-076-1(9)

Scale: As Shown Date: Feb. 29, 2008

DAVID K. FUJIWARA LICENSED PROFESSIONAL ENGINEER NO. 8104-S HAWAII, U.S.A.

THIS WORK WAS PREPARED BY ME OR UNDER MY SUPERVISION.

SIGNATURE EXPIRATION DATE OF THE LICENSE 4-30-08

ORIGINAL PLAN
NOTE BOOK No.
SURVEY PLOTTED BY
DRAWN BY
TRACED BY
DESIGNED BY
QUANTITIES BY
CHECKED BY
DATE

SHEET No. HS4.2 OF 33 SHEETS

AS-BUILT

FED. ROAD DIST. NO.	STATE	FED. AID PROJ. NO.	FISCAL YEAR	SHEET NO.	TOTAL SHEETS
HAWAII	HAW.	CMAQ-076-1(19)	2006	26	58

DATE	REVISION
7/3/08	1 Revise Bottom of N Abutment Cap
9/30/09	3 As Built

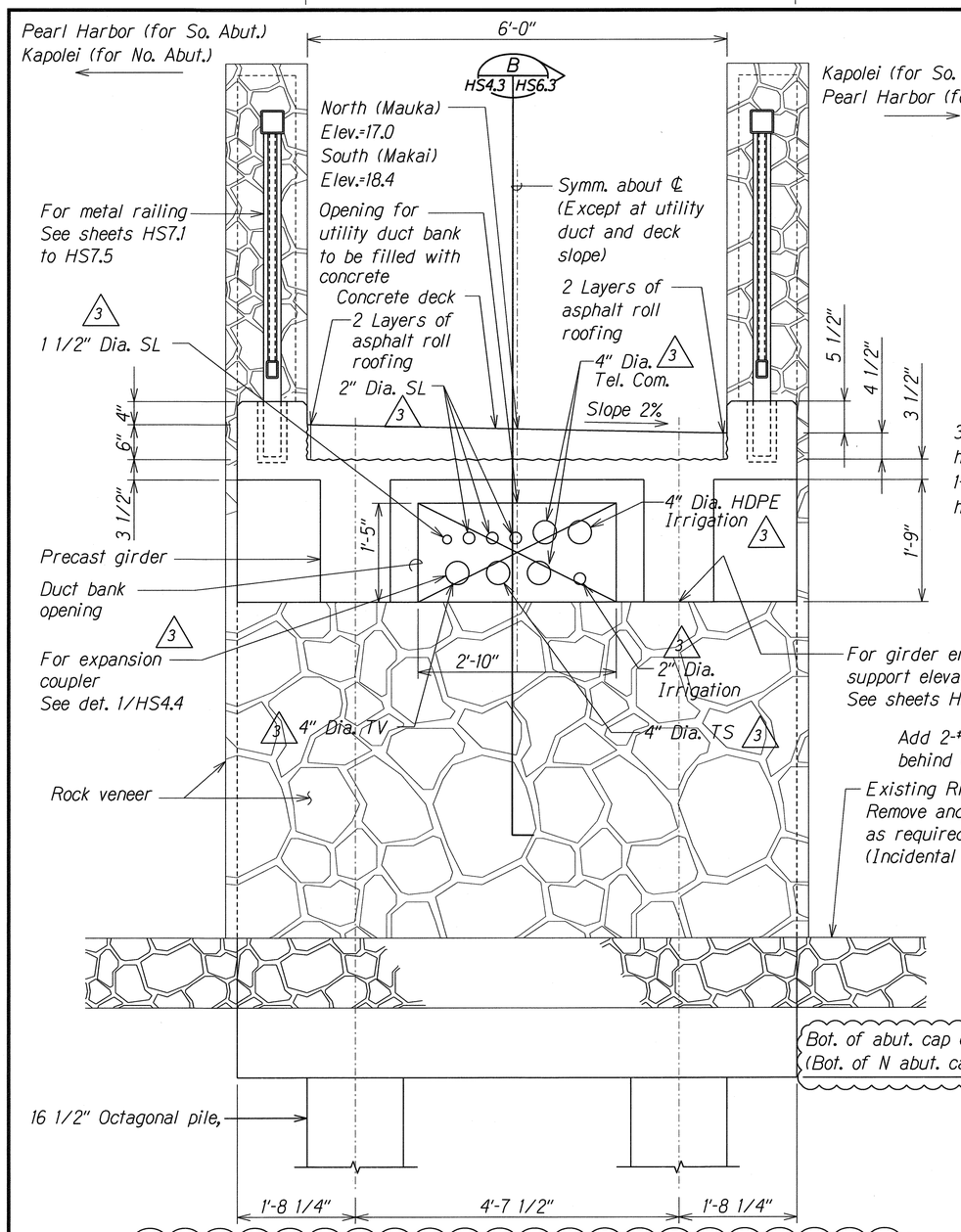

SOUTH ABUTMENT ELEVATION
NORTH ABUTMENT ELEVATION (SIM. AS NOTED)
Scale: 1" = 1'-0"
A HS2J HS4.3
HS4.1

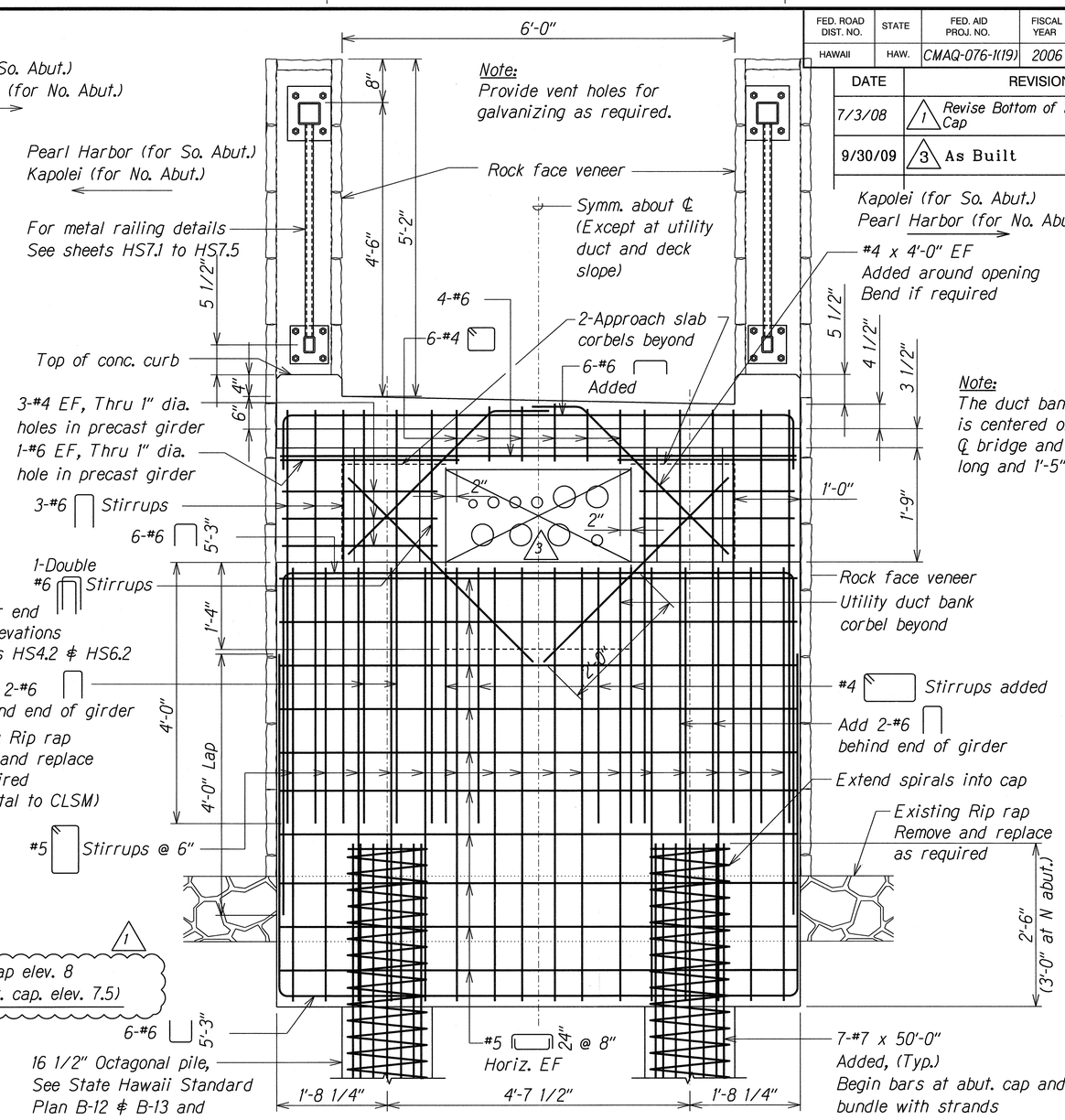

For girder end
support elevations
See sheets HS4.2 & HS6.2

Add 2-#6
behind end of girder

Existing Rip rap
Remove and replace
as required
(Incidental to CLSM)

Bot. of abut. cap elev. 8
(Bot. of N abut. cap. elev. 7.5)

16 1/2" Octagonal pile,
See State Hawaii Standard
Plan B-12 & B-13 and
modified by bundling 7-#7
with strands

SOUTH ABUTMENT SECTION
NORTH ABUTMENT SECTION
(SIM. AS NOTED)
Scale: 1" = 1'-0"
B HS2J HS4.3
HS4.1, HS4.3

DAVID K. FUJIWARA
LICENSED PROFESSIONAL ENGINEER
NO. 8104-S
HAWAII, U.S.A.

THIS WORK WAS PREPARED BY ME OR UNDER MY SUPERVISION.

SIGNATURE — EXPIRATION DATE OF THE LICENSE 4-30-08

STATE OF HAWAII
DEPARTMENT OF TRANSPORTATION
HIGHWAYS DIVISION

TYPICAL ABUTMENT ELEVATION AND SECTION

Fort Weaver Road Widening
Honouliuli Stream Pedestrian Bridge
Vicinity of Aawa Drive to Geiger Road
Federal Aid Project No. CMAQ-076-1(9)

Scale: As Shown — Date: Feb. 29, 2008

SHEET No. HS4.3 OF 33 SHEETS

ORIGINAL PLAN — SURVEY PLOTTED BY, DRAWN BY, TRACED BY, DESIGNED BY, QUANTITIES BY, CHECKED BY, DATE
NOTE BOOK No.

AS-BUILT

FED. ROAD DIST. NO.	STATE	FED. AID PROJ. NO.	FISCAL YEAR	SHEET NO.	TOTAL SHEETS
HAWAII	HAW.	CMAQ-076-1(19)	2006	27	58

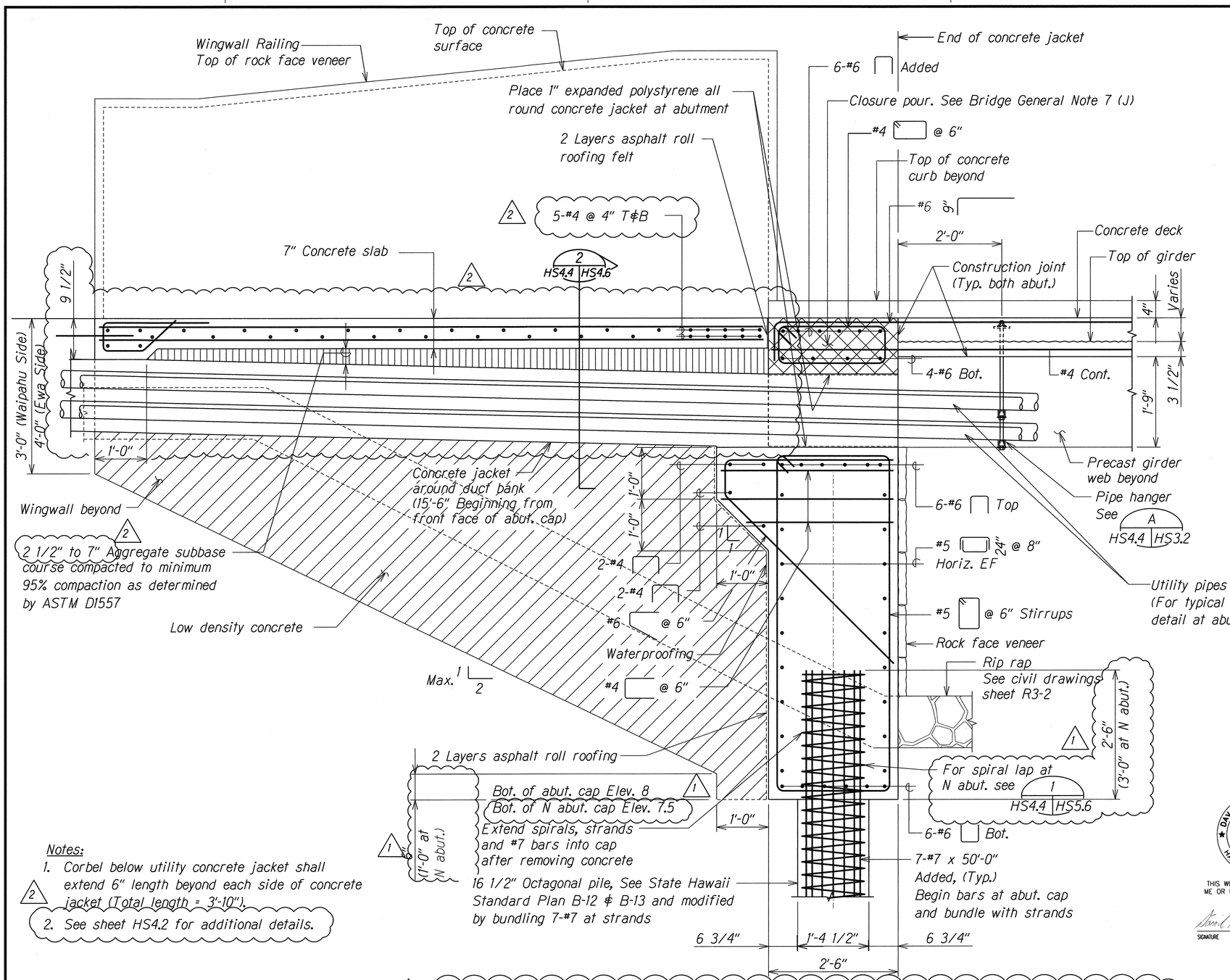

Notes:

1. Corbel below utility concrete jacket shall extend 6" length beyond each side of concrete jacket (Total length = 3'-10").
2. See sheet HS4.2 for additional details.

1 SOUTH ABUTMENT SECTION AT DUCT BANK
NORTH ABUTMENT SECTION AT DUCT BANK (SIM. AS NOTED)

Scale: 1" = 1'-0"

A HS2.1 HS4.4

HS4.1, HS4.4

ORIGINAL PLAN — SURVEY PLOTTED BY ____ DATE ____ SURVEY VERIFIED BY ____ TRACED BY ____ DESIGNED BY ____ QUANTITIES BY ____ CHECKED BY ____ NOTE BOOK ____ No. ____

DAVID K. FUJIWARA LICENSED PROFESSIONAL ENGINEER NO. 8104-S HAWAII, U.S.A.

THIS WORK WAS PREPARED BY ME OR UNDER MY SUPERVISION.

SIGNATURE — EXPIRATION DATE OF THE LICENSE 4-30-08

DATE	REVISION
9/30/09	3 As Built
12/10/08	2 Revise Approach Slab
7/3/08	1 Revise Bottom of N Abutment Cap

STATE OF HAWAII
DEPARTMENT OF TRANSPORTATION
HIGHWAYS DIVISION

ABUTMENT SECTION AT DUCT BANK

Fort Weaver Road Widening
Honouliuli Stream Pedestrian Bridge
Vicinity of Aawa Drive to Geiger Road
Federal Aid Project No. CMAQ-076-1(9)

Scale: As Shown Date: Feb. 29, 2008

SHEET No. HS4.4 OF 33 SHEETS

AS-BUILT

FED. ROAD DIST. NO.	STATE	FED. AID PROJ. NO.	FISCAL YEAR	SHEET NO.	TOTAL SHEETS
HAWAII	HAW.	CMAQ-076-1(19)	2006	28	58

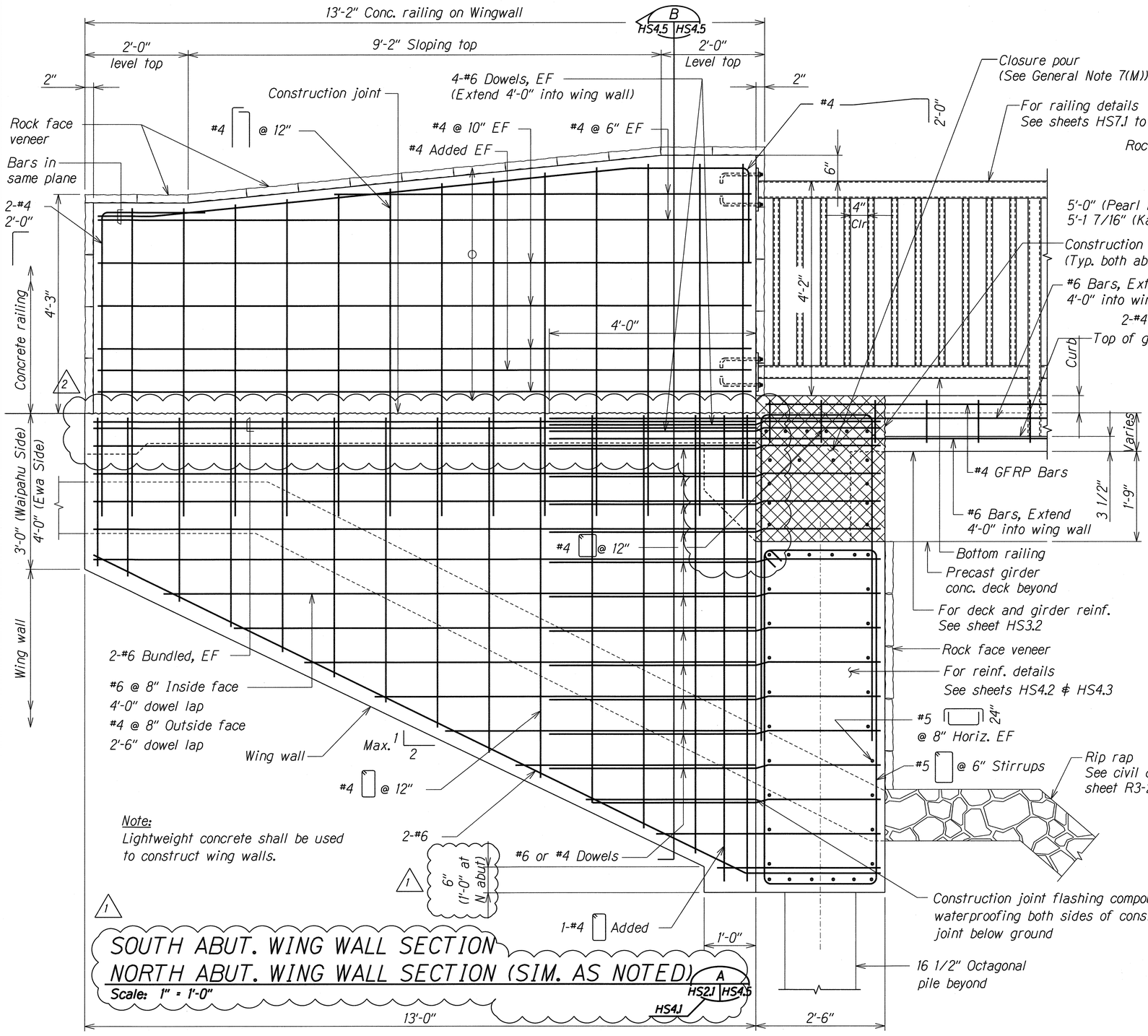

Note:
Lightweight concrete shall be used to construct wing walls.

SOUTH ABUT. WING WALL SECTION
NORTH ABUT. WING WALL SECTION (SIM. AS NOTED)

Scale: 1" = 1'-0"

A HS2.1 HS4.5 HS4.1

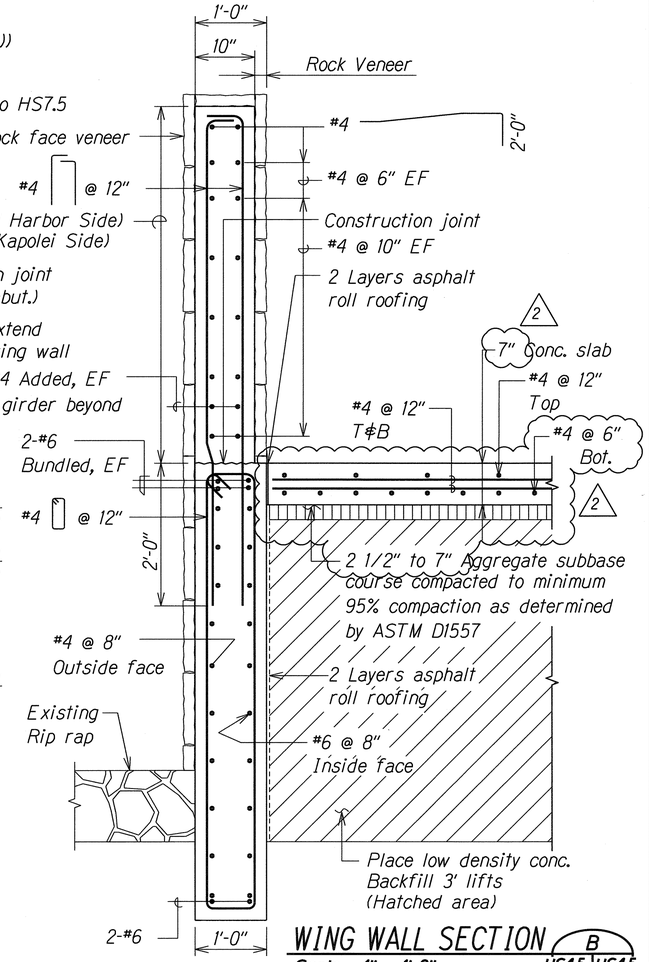

WING WALL SECTION

Scale: 1" = 1'-0"

B HS4.5 HS4.5

DATE	REVISION
9/30/09	3 As Built
12/10/08	2 Revise Approach Slab and Corbel
7/3/08	1 Revise Bottom of N Abutment Cap

STATE OF HAWAII
DEPARTMENT OF TRANSPORTATION
HIGHWAYS DIVISION

WING WALL SECTIONS

Fort Weaver Road Widening
Honouliuli Stream Pedestrian Bridge
Vicinity of Aawa Drive to Geiger Road
Federal Aid Project No. CMAQ-076-1(9)

Scale: As Shown Date: Feb. 29, 2008

DAVID K. FUJIWARA LICENSED PROFESSIONAL ENGINEER NO. 8104-S HAWAII, U.S.A.

THIS WORK WAS PREPARED BY ME OR UNDER MY SUPERVISION.

SIGNATURE 4-30-08 EXPIRATION DATE OF THE LICENSE

ORIGINAL PLAN | SURVEY PLOTTED BY | DRAWN BY | TRACED BY | DESIGNED BY | QUANTITIES BY | CHECKED BY | DATE | NOTE BOOK No.

SHEET No. HS4.5 OF 33 SHEETS

AS-BUILT

FED. ROAD DIST. NO.	STATE	FED. AID PROJ. NO.	FISCAL YEAR	SHEET NO.	TOTAL SHEETS
HAWAII	HAW.	CMAQ-076-1(19)	2006	29	58

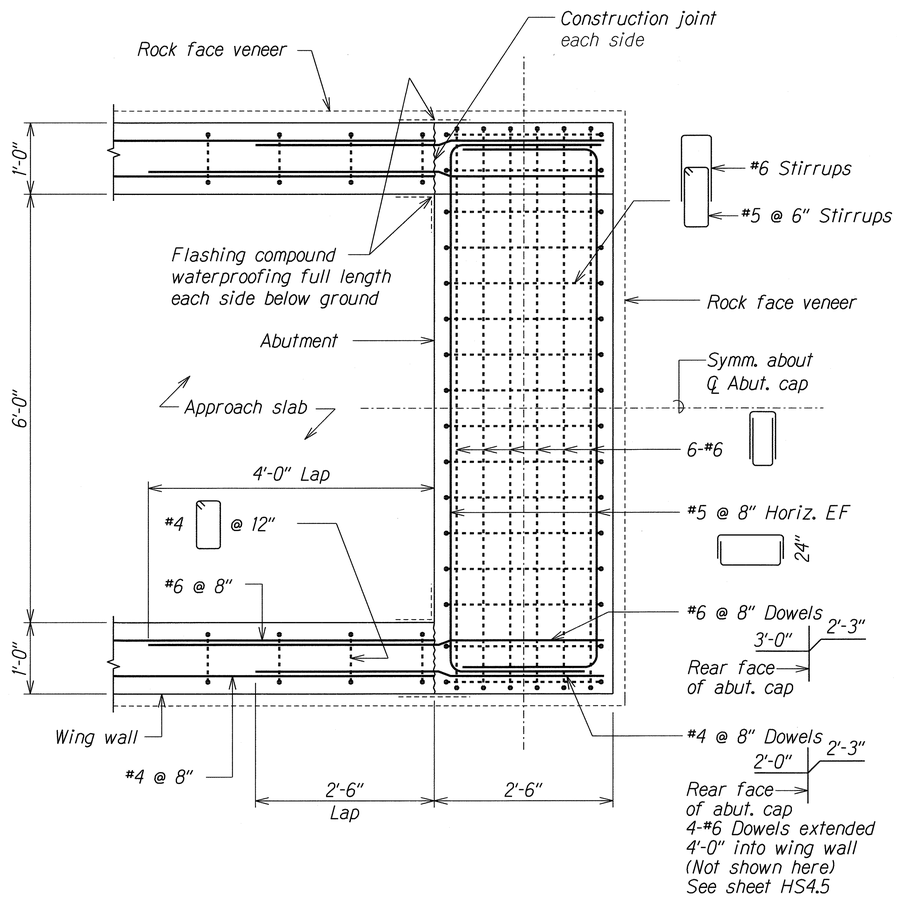

WING WALL / ABUT. CORNER DETAILS

Scale: 1" = 1'-0"

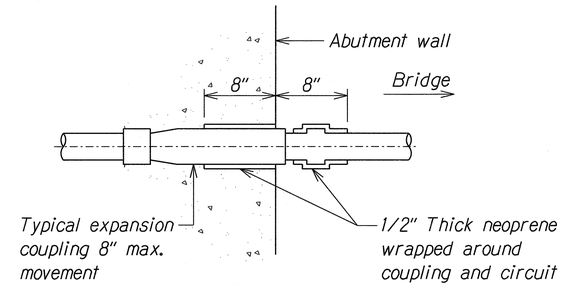

TYPICAL ELECTRICAL DUCT EXPANSION DETAIL AT ABUTMENT

1 HS4.6 | HS4.6

Scale: 1 1/2" = 1'-0"

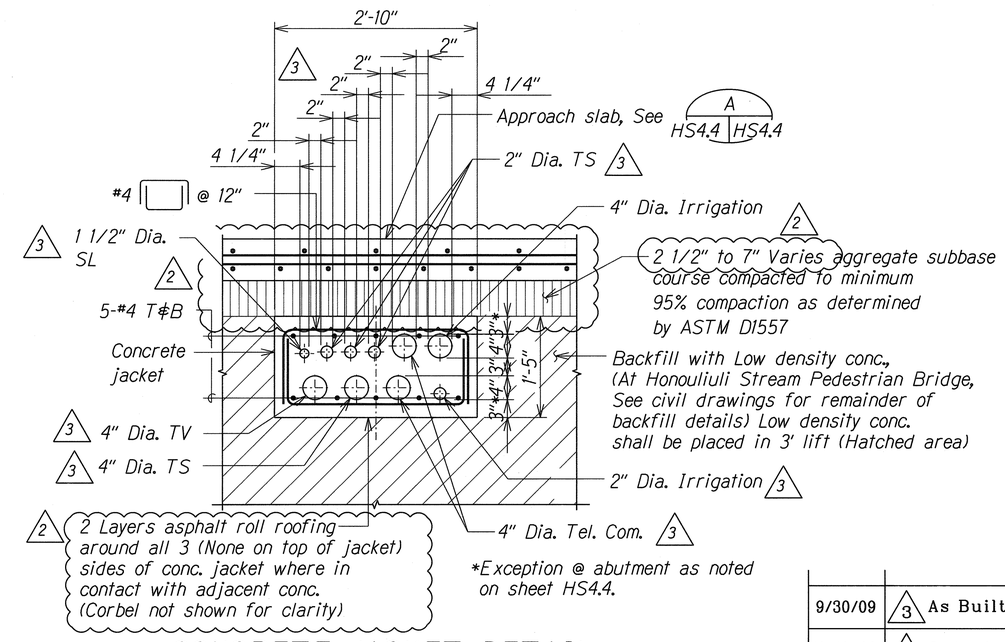

CONCRETE JACKET DETAIL

2 HS4.4 | HS4.6

Scale: 1" = 1'-0"

DATE	REVISION
9/30/09	3 As Built
12/10/08	2 Revise Concrete Jacket Detail

DAVID K. FUJIWARA LICENSED PROFESSIONAL ENGINEER NO. 8104-S HAWAII, U.S.A.

THIS WORK WAS PREPARED BY ME OR UNDER MY SUPERVISION.

SIGNATURE — EXPIRATION DATE OF THE LICENSE 4-30-08

STATE OF HAWAII
DEPARTMENT OF TRANSPORTATION
HIGHWAYS DIVISION

WING WALL / ABUTMENT DETAILS

Fort Weaver Road Widening
Honouliuli Stream Pedestrian Bridge
Vicinity of Aawa Drive to Geiger Road
Federal Aid Project No. CMAQ-076-1(9)

Scale: As Shown — Date: Feb. 29, 2008

SHEET No. HS4.6 OF 33 SHEETS

ORIGINAL PLAN — NOTE BOOK No. — SURVEY PLOTTED BY — DRAWN BY — TRACED BY — DESIGNED BY — QUANTITIES BY — CHECKED BY — DATE

AS-BUILT