FED. ROAD DIST. NO.	STATE	FED. AID PROJ. NO.	FISCAL YEAR	SHEET NO.	TOTAL SHEETS
HAWAII	HAW.	STP-076-1(3)	1993	31	34

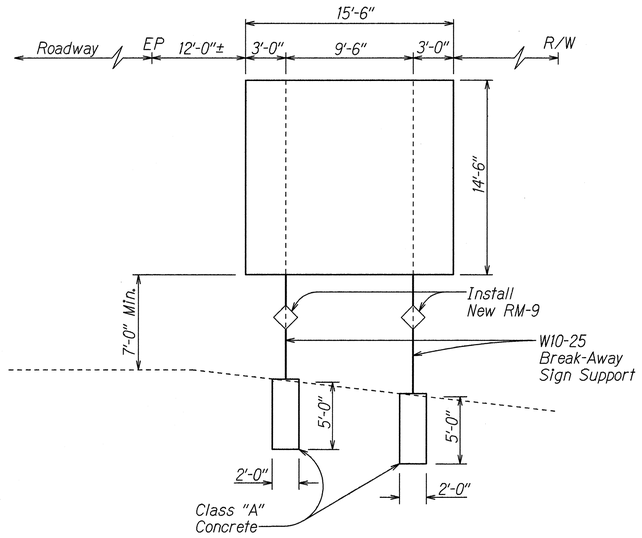

D-1

℄ Sta. 63+00± Rt.

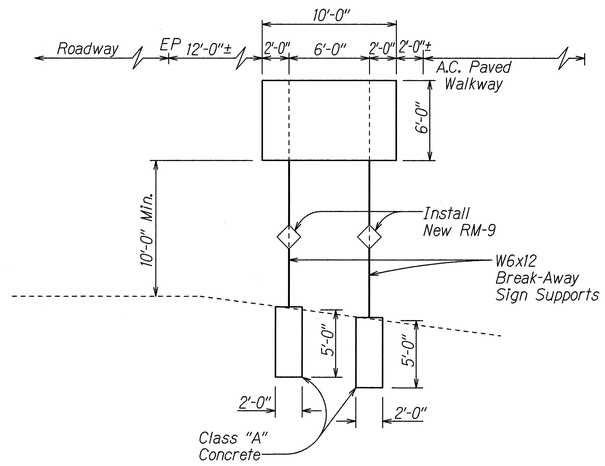

D-2

℄ Sta. 63+65± Lt.

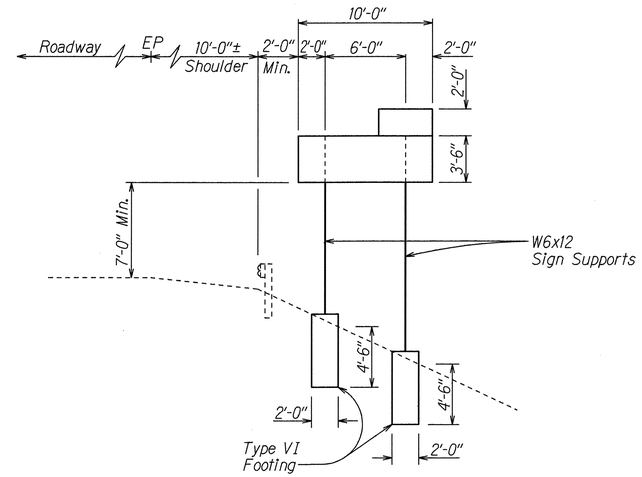

D-3

℄ Sta. 84+50± Rt.

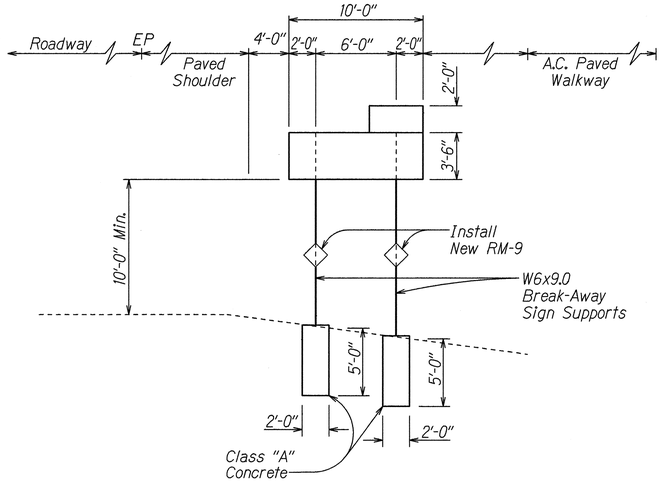

D-4

℄ Sta. 105+00± Lt.

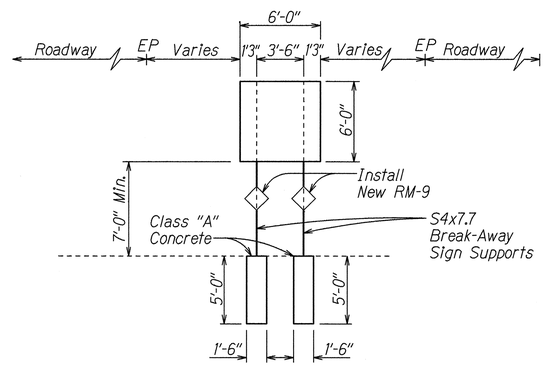

D-5, D-6 ⫬ D-7

℄ Sta. 93+50± Rt.
℄ Sta. 99+00± Lt.
RAMP "KA" - ℄ Sta. 4+10± Lt.

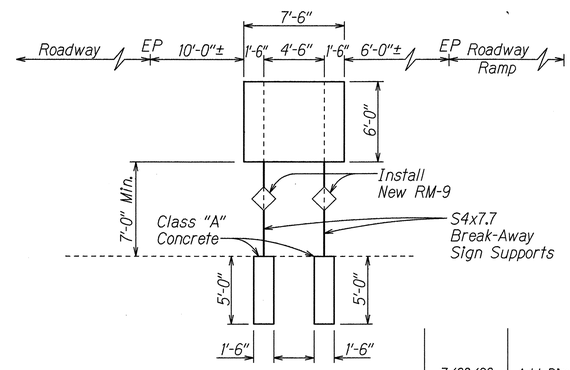

D-8

℄ Sta. 79+10± Rt.

DATE	REVISION
7/30/93	Add Dimensions to Signs D-2 ⫬ D-4
6/14/93	Revise Sign Location for D-5 from ℄ Sta. 92+75± Rt. to ℄ Sta. 93+50± Rt.

STATE OF HAWAII
DEPARTMENT OF TRANSPORTATION
HIGHWAYS DIVISION

FRAME LAYOUT

FORT WEAVER ROAD RESURFACING
H-1 to Farrington Interchange
F.A. PROJECT NO. STP-076-1(3)

Scale: 3/16" = 1'-0" Date: May 1993

SHEET No. T12 OF 15 SHEETS

C.O. ADD. 31

ORIGINAL PLAN	SURVEY PLOTTED BY	DATE
	DRAWN BY	
	TRACED BY	
NOTE BOOK	DESIGNED BY	
	QUANTITIES BY	
No.	CHECKED BY	