DATE	REVISION
6/23/81	Revised BWS Note 8. Added BWS Note 11. Added BWS Reapproval Block.

FED. ROAD DIST. NO.	STATE	FED. AID PROJ. NO.	FISCAL YEAR	SHEET NO.	TOTAL SHEETS
HAWAII	HAW.	M-7600 (2)	1980	133	244

GENERAL UTILITY NOTES

1. The Contractor shall be liable for damage to any existing utility and structure.
2. The existence and location of underground utilities, appurtenances and structures as shown on the Plans are based on existing records of varying degrees of accuracy and completeness. They are not guaranteed as to the location shown or that other obstacles may not be encountered in the course of work. The Contractor shall assume that existing utilities may exist, although not shown.
3. Restoration of existing improvements unavoidably demolished due to work on utility reconstructions shall be incidental to the various contract items. Restoration shall be to original or better condition.
4. The Contractor shall give all property owners five (5) days notice before entering into their respective properties
5. Roadway construction work from FWR Sta. 160+00 to Sta. 204+50 to be built in future contract, except for utilities relocation works indicated.

BOARD OF WATER SUPPLY NOTES

1. Unless otherwise specified, all materials and construction of the water system facilities and appurtenances shall be in accordance with the Standard Specifications for Road and Bridge Construction, dated 1976, and as amended, of the Hawaii Highways Division, Department of Transportation.
2. The Contractor shall give the Board of Water Supply in writing, at least one-week advance notice of intent to commence work on the water system.
3. Prior to excavating for other new utility lines, the Contractor shall verify in the field the location of existing water mains and appurtenances. Where other new utility lines are to cross over or under existing water mains, the Contractor shall expose the existing water mains prior to trenching. Excavation around water mains shall be done by hand.
4. Unless otherwise specified, ductile iron pipe Class 52 shall be used for reconstructed 6-inch water lines with test pressure of 150 psi.
5. All shown information for connection to existing water lines shall be verified in the field by the Contractor and shall be adjusted as necessary.
6. There shall be a minimum horizontal clearance of 3 feet, and a minimum vertical clearance of 6 inches, between water mains and other utilities.
7. Unless otherwise specified, connections to existing water mains & chlorination of new mains shall be done by the Contractor, with the BWS inspector coordinating the work. For details, contact BWS Engineering Division, Construction Section.
8. Plans approved by the Board of Water Supply are based solely on the adequacy of the water supply. Discrepancies if any, of alignments, grades, fittings, etc., are not the responsibility of the Board of Water Supply.
9. All Cast Iron (Gray or Ductile) Water Mains, fittings & valves shall be enclosed in plastic material in accordance with ANSI Specifications A21.5-1972 or AWWA Specifications C105-72 "Polyethylene Encasement for Gray & Ductile Cast Iron Piping for Water and Other Liquids".
10. Reapproval shall be required if this project is not under construction within a period of one year from Date on signature block. See Rules and Regulations of the Board of Water Supply.

TELEPHONE NOTES
(HAWAIIAN TELEPHONE CO.)

1. The Contractor shall give HTCo, in writing, at least 20 working days advance notice of intent to commence work on the telephone system.
2. Existing telephone facilities shown on these plans are approximate only. The Contractor shall verify their actual location and shall make adjustments to the proposed facility as directed by HTCo.
3. HTCo. will coordinate its work with the Contractor in such a manner as to expedite construction.
4. All exist. poles, anchors, & cables owned or erected by HTCo. will be removed by HTCo.
5. The Contractor shall provide HTCo. with 48 hours notice for toning and marking of existing HTCo. or Military underground facilities prior to excavating in Project Area.
6. All exist. HTCo. and Military cable facilities shall remain in place until the proposed facilities are installed.

ELECTRIC NOTES
(HAWAIIAN ELECTRIC CO., INC.)

1. All existing facilities shall remain in place until the proposed facilities are installed. Existing electric facilities shown on these plans are approximate only. The Contractor shall verify their actual locations and shall make adjustments to the proposed facility as directed by HECo.
2. HECo. will coordinate its work with the Contractor in such a manner as to expedite construction.
3. All materials required for the location and rearrangement of the HECo.'s overhead facilities will be furnished by HECo.
4. Excavation of pole holes and anchors, Installation & Removal of poles & anchors, and backfill of pole holes and anchors will be done by HECo.. Stake out of wood pole and anchor locations to be done by HECo.
5. State and/or its Contractor to stake out R/W, Base Line, Stations and Cuts and/or Fills.
6. State and/or its Contractor to assist HECo. in the staking out of Proposed Poles.

BOARD OF WATER SUPPLY NOTES (CONTINUED)

11. Any adjustments to the existing water system required during construction to meet requirements of BWS standards, whether shown on the plans or not, shall be done by the Contractor at no cost to the Board of Water Supply.

LEGEND FOR UTILITY DRAWINGS

New Facilities	━━━
Existing Facilities to remain	———
Existing Facilities to be : Removed, demolished, abandoned or relocated when new lines are in service	+++++++++
Telephone - Underground (HTCo)	—TU—
Telephone - Aerial (HTCo.)	—TA—
Electric - Aerial (HECo.)	—EA—
Army Communications Cable	—ACC—
Water (BWS)	—W16"—
Water (Oahu Sugar Co.)	—W6"(O)—
Sewer (Oahu Sugar Co.)	—S6"(O)—
Water (U.S. Navy)	—W12"(USN)—
Abandoned Gas (U.S. Navy)	—G8"(USN)—
Oil Line (Standard Oil Co.)	—OIL 8"—
New Anchor Pole	▷
Water Valve Box	WV
Manhole	MH
Traffic Signal - Aerial	TS_A
New Joint Pole	⊙ J.P.

ELECTRIC NOTES (CONTINUED)

7. Contact HECo. Underground Division at 548-7395 a minimum of seventy-two (72) hours in advance for verifying the location of underground duct lines and for assistance in providing for support and protection of underground duct lines.
8. Contact HECo District Construction Superintendent Mr. Walter Okudara at 455-2933 a minimum of seventy-two (72) hours in advance for assistance in providing pole bracing instructions should field conditions and/or construction procedures require that poles be braced to facilitate construction.

REAPPROVAL:

R. Nagata 7-9-81
for Chief, Planning & Engineering, BWS Date

R. Nagata 3-6-79
for Chief, Planning & Engineering, BWS Date

W. Lee 10/24/79
Hawaiian Electric Co., Inc. Date

B. Yamaka 11-8-79
Hawaiian Telephone Co. Date

REGISTERED PROFESSIONAL ENGINEER NO. 1934 HAWAII

THIS WORK WAS PREPARED BY ME OR UNDER MY SUPERVISION
W. K. Ellison

STATE OF HAWAII
DEPARTMENT OF TRANSPORTATION
HIGHWAYS DIVISION

GENERAL UTILITY NOTES AND LEGEND

FORT WEAVER ROAD
SOUTH OF FARRINGTON HIGHWAY
TO THE VICINITY OF RENTON ROAD

DATE: SEPT 1979

SHEET No. 1 OF 1 SHEETS

C.O. 133

ORIGINAL PLAN | NOTE BOOK No. | SURVEY PLOTTED BY | DRAWN BY | TRACED BY | DESIGNED BY | QUANTITIES BY | CHECKED BY | DATE

FED. ROAD DIST. NO.	STATE	FED. AID PROJ. NO.	FISCAL YEAR	SHEET NO.	TOTAL SHEETS
HAWAII	HAW.	M-7600 (2)	1980	134	244

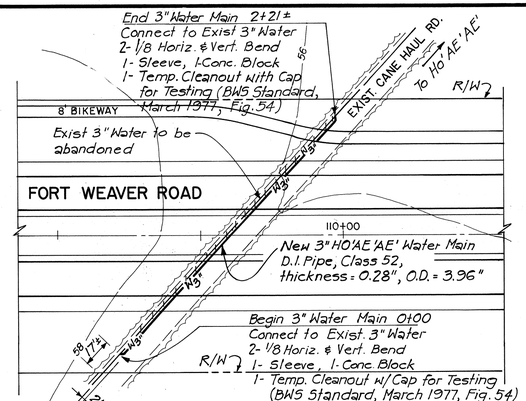

PLAN - 3" HO'AE'AE' WATER MAIN
Scale: 1" = 50'

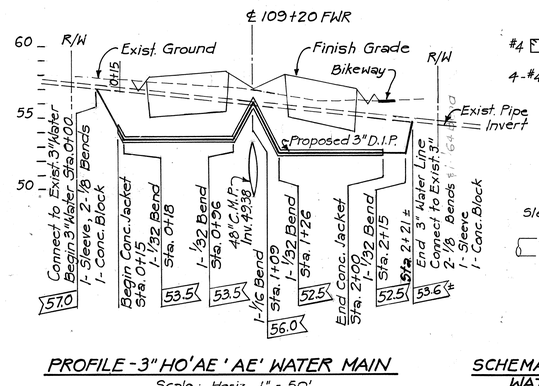

PROFILE - 3" HO'AE'AE' WATER MAIN
Scale: Horiz. 1" = 50'
Vert. 1" = 5'

NOTE: Existing Water Line is privately owned.

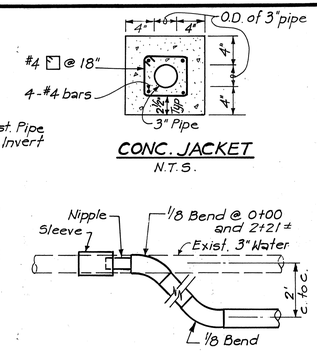

PLAN
SCHEMATIC DETAIL OF 3" HO'AE'AE' WATER MAIN TIE-INS
N.T.S.

HO'AE'AE' WATER MAIN NOTES

1. Unless otherwise specified, all materials and construction of the water system facilities and appurtenances shall be in accordance with the Standard Specifications for Road and Bridge Construction, dated 1976, and as amended, of the Hawaii Highways Division, Department of Transportation.
2. The Contractor shall notify the Engineer in writing at least 7 days prior to the time that the Contractor performs the connections to the existing water main.
3. All shown information for connection to existing water line shall be verified in the field by the Contractor and shall be adjusted as necessary.
4. Unless otherwise specified, chlorination of relocated main shall be done by the Contractor.

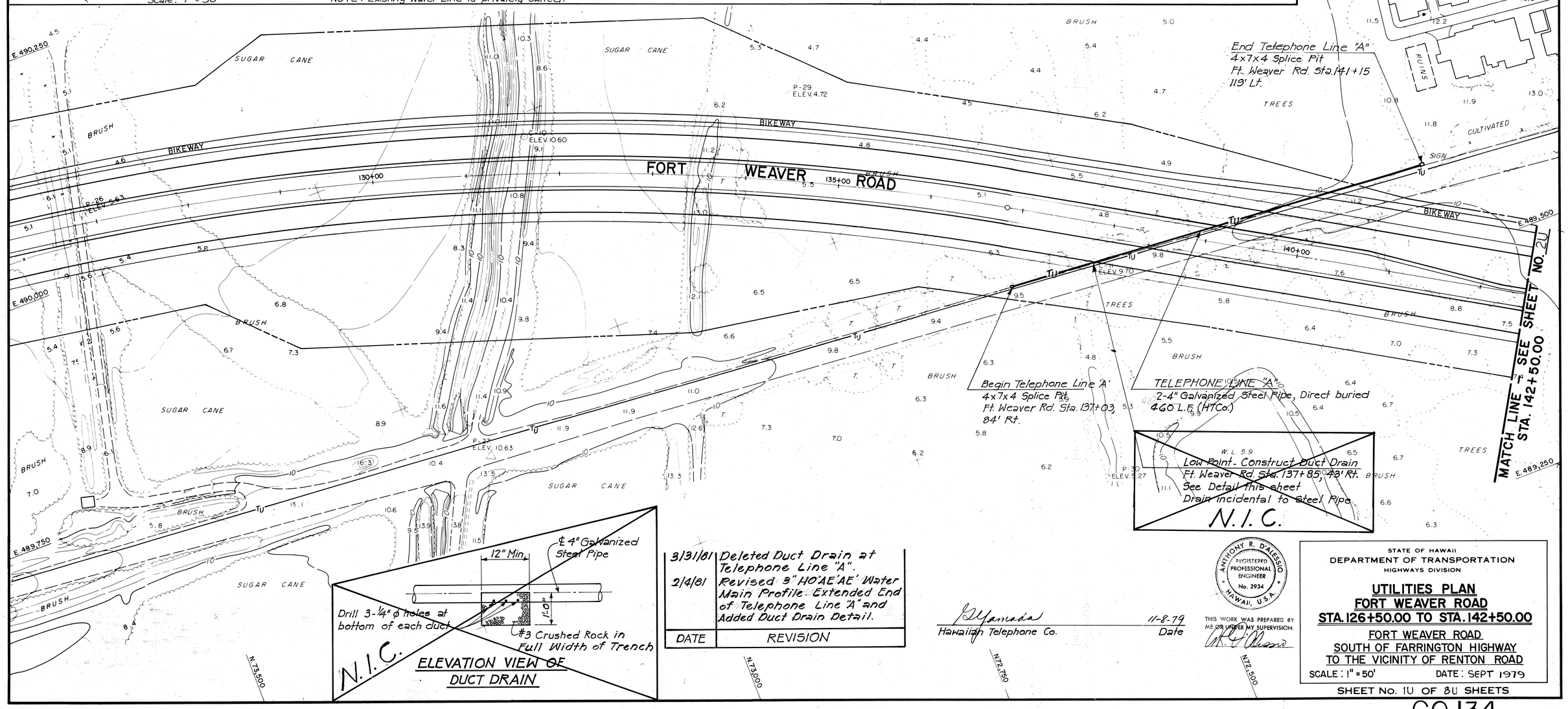

ELEVATION VIEW OF DUCT DRAIN

DATE	REVISION
3/31/81	Deleted Duct Drain at Telephone Line "A".
2/4/81	Revised 3" HO'AE'AE' Water Main Profile. Extended End of Telephone Line "A" and Added Duct Drain Detail.

G. Yamada
Hawaiian Telephone Co.

11-8-79
Date

ANTHONY R. D'ALESSIO
REGISTERED PROFESSIONAL ENGINEER
No. 2934
HAWAII, U.S.A.

THIS WORK WAS PREPARED BY ME OR UNDER MY SUPERVISION.

STATE OF HAWAII
DEPARTMENT OF TRANSPORTATION
HIGHWAYS DIVISION

UTILITIES PLAN
FORT WEAVER ROAD
STA. 126+50.00 TO STA. 142+50.00

FORT WEAVER ROAD
SOUTH OF FARRINGTON HIGHWAY
TO THE VICINITY OF RENTON ROAD

SCALE: 1" = 50'
DATE: SEPT 1979

SHEET No. 1U OF 8U SHEETS

C.O. 134

ORIGINAL PLAN		DATE
	SURVEY PLOTTED BY	
	DRAWN BY	
	TRACED BY	
NOTE BOOK	DESIGNED BY	
	QUANTITIES BY	
	CHECKED BY	
NO.		

FED. ROAD DIST. NO.	STATE	FED. AID PROJ. NO.	FISCAL YEAR	SHEET NO.	TOTAL SHEETS
HAWAII	HAW.	M-7600(2)	1980	135	244

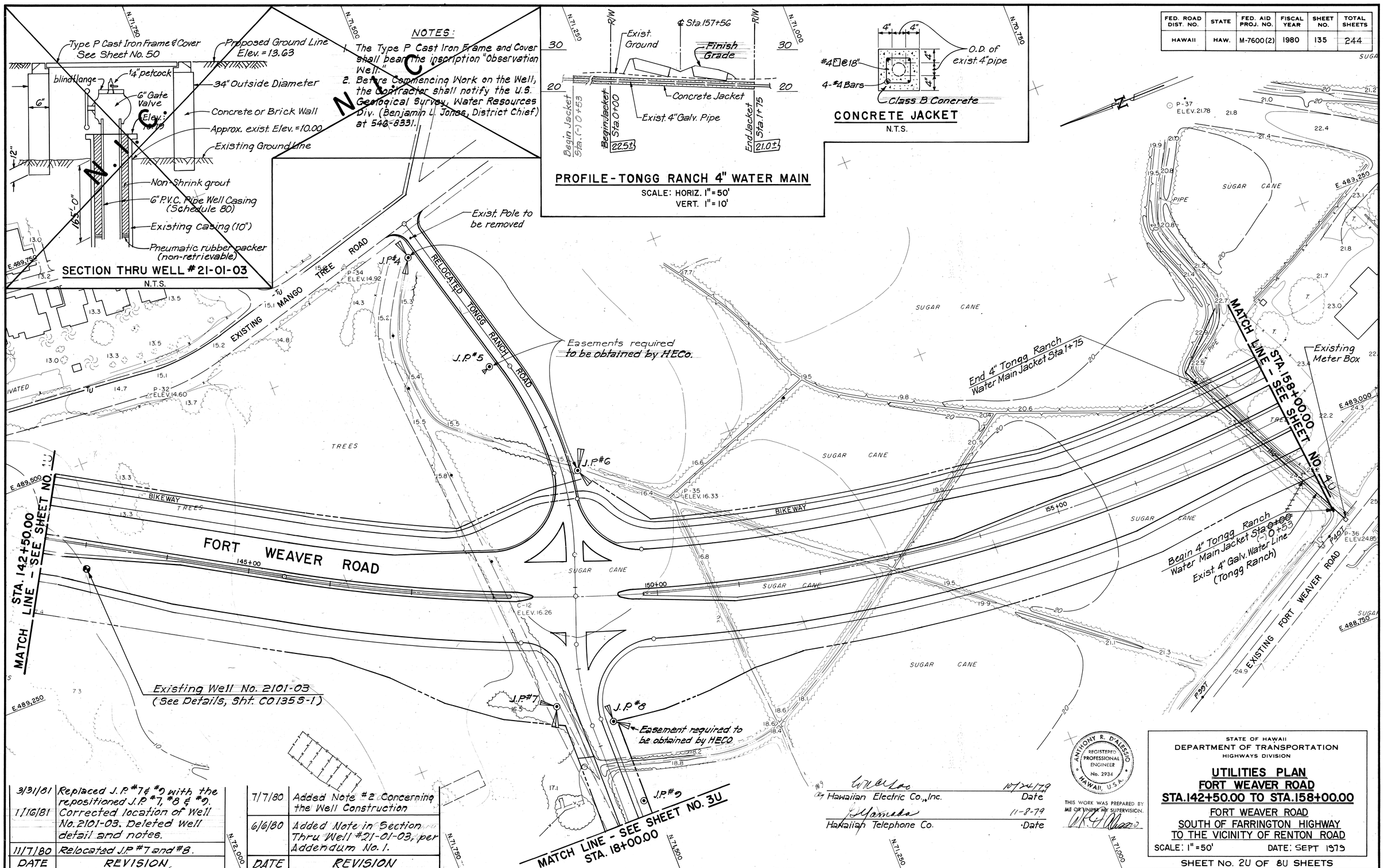

DATE	REVISION
3/31/81	Replaced J.P. #7 & #9 with the repositioned J.P. #7, #8 & #9.
1/16/81	Corrected location of Well No. 2101-03. Deleted well detail and notes.
11/7/80	Relocated J.P. #7 and #8.

DATE	REVISION
7/7/80	Added Note #2 Concerning the Well Construction
6/6/80	Added Note in Section Thru Well #21-01-03, per Addendum No. 1.

Hawaiian Electric Co., Inc.	10/24/79 Date
Hawaiian Telephone Co.	11-8-79 Date

ANTHONY R. D'ALESSIO REGISTERED PROFESSIONAL ENGINEER No. 2934 HAWAII, U.S.A.

THIS WORK WAS PREPARED BY ME OR UNDER MY SUPERVISION.

STATE OF HAWAII
DEPARTMENT OF TRANSPORTATION
HIGHWAYS DIVISION

UTILITIES PLAN
FORT WEAVER ROAD
STA. 142+50.00 TO STA. 158+00.00

FORT WEAVER ROAD
SOUTH OF FARRINGTON HIGHWAY
TO THE VICINITY OF RENTON ROAD

SCALE: 1" = 50' DATE: SEPT 1979

SHEET No. 2U OF 8U SHEETS

C.O.135 R

ORIGINAL PLAN	
SURVEY PLOTTED BY	DATE
DRAWN BY	
TRACED BY	
DESIGNED BY	
QUANTITIES BY	
CHECKED BY	
NOTE BOOK	
NO.	

FED. ROAD DIST. NO.	STATE	FED. AID PROJ. NO.	FISCAL YEAR	SHEET NO.	TOTAL SHEETS
HAWAII	HAW.	M-7600(2)	1981	C0135S-1	244

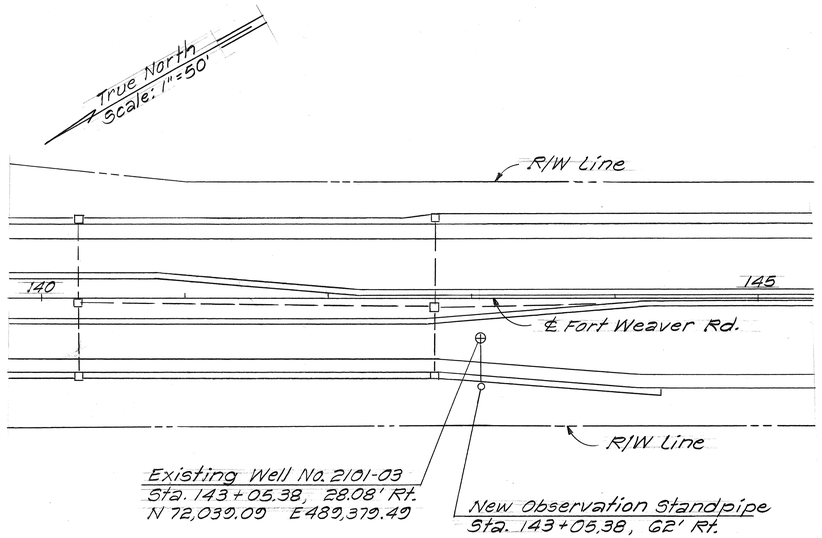

PLAN

Scale: 1" = 50'

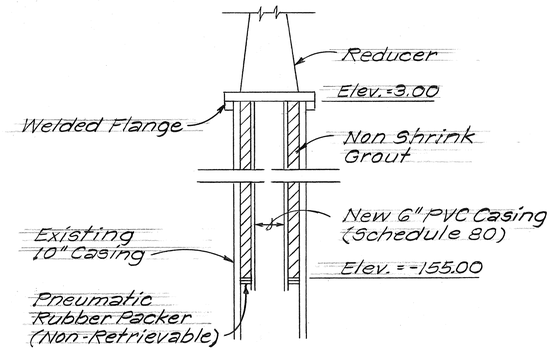

WELL RECASING DETAIL

Not to Scale

NOTES:

1. The Type P Cast Iron Frames and Covers shall bear the inscription "Observation Well" See details on Sheet No. 50.
2. Before commencing work on the well, the Contractor shall notify the U.S. Geological Survey, Water Resources Divison (Benjamin L. Jones, District Chief) at 546-8331.
3. The Contractor shall also provide two days advance notification to the Department of Land and Natural Resources, Divison of Water and Land Development (Robert T. Chuck, Manager-Chief Engineer) at 548-7533.
4. Remove existing 10" Well Casing to Elev. 3.00 and install flange. Clean existing casing and install new 6" PVC casing to Elev. -155. Fill annulus with non-shrink grout. See Well Recasing Detail this sheet.
5. Provide 2" minimum space between manhole wall and upper half of barrel of pipe. Fill with asphalt filler.
6. Water proof outside of Type A Manhole below Elev. 10 per Subsection 503.03(H) of Standard Specifications.

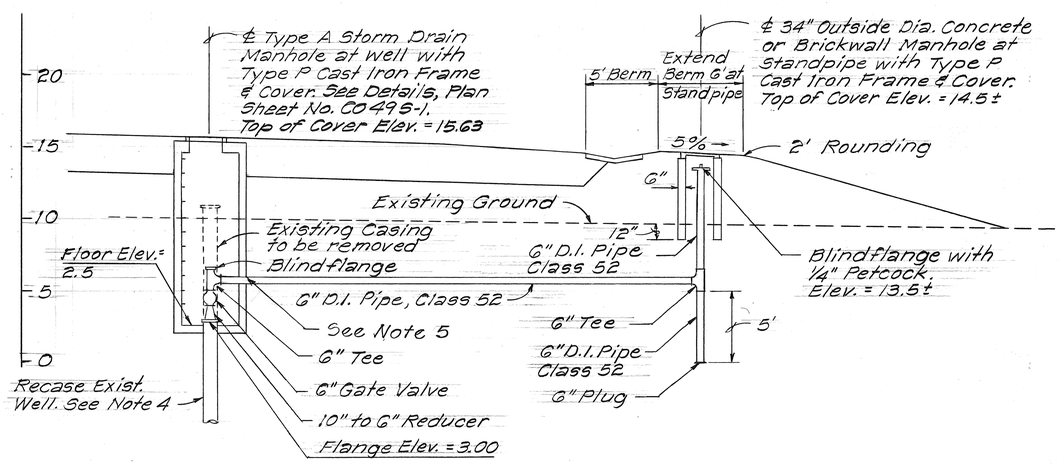

SECTION

Scale: 1" = 5'

ORIGINAL PLAN	SURVEY PLOTTED BY	DATE
	DRAWN BY	"
	TRACED BY	"
NOTE BOOK	DESIGNED BY	"
No.	QUANTITIES BY	"
	CHECKED BY	"

STATE OF HAWAII
DEPARTMENT OF TRANSPORTATION
LAND TRANSPORTATION FACILITIES DIVISION

WELL NO. 2101-03
CONVERSION TO OBSERVATION WELL

FORT WEAVER ROAD
SOUTH OF FARRINGTON HIGHWAY
TO THE VICINITY OF RENTON ROAD

Scale: As shown Date: Jan. 1981

SHEET No. 2UA OF 8U SHEETS

C0135S-1

FED. ROAD DIST. NO.	STATE	FED. AID PROJ. NO.	FISCAL YEAR	SHEET NO.	TOTAL SHEETS
HAWAII	HAW.	M-7600 (2)	1980	136	244

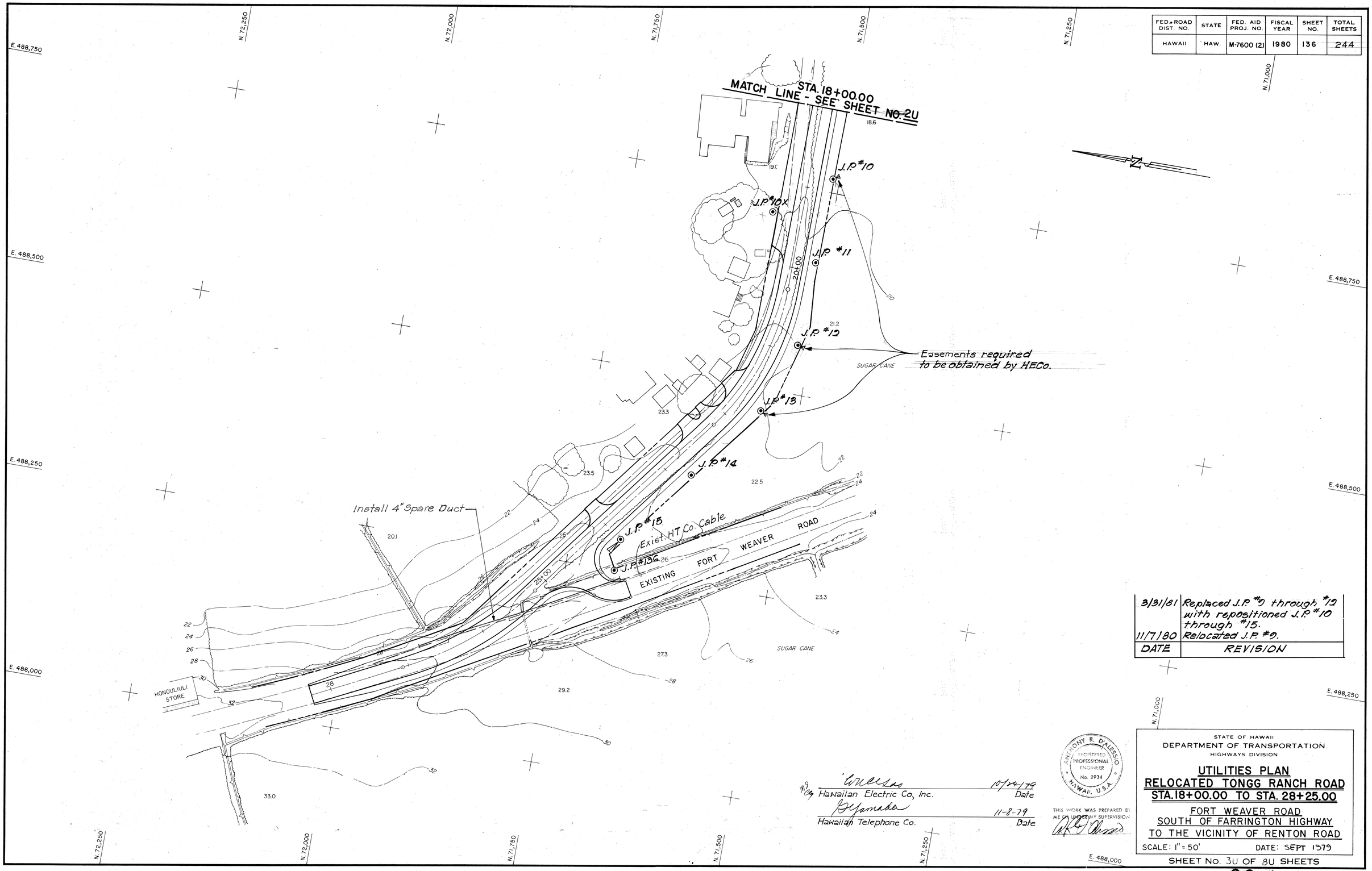

DATE	REVISION
3/31/81	Replaced J.P. #9 through #12 with repositioned J.P. #10 through #15.
11/7/80	Relocated J.P. #9.

ORIGINAL PLAN	SURVEY PLOTTED BY	DATE
	DRAWN BY	
	TRACED BY	
NOTE BOOK	DESIGNED BY	
	QUANTITIES BY	
No.	CHECKED BY	

Hawaiian Electric Co, Inc. — Date 10/24/79

Hawaiian Telephone Co. — Date 11-8-79

ANTHONY R. D'ALESSIO — REGISTERED PROFESSIONAL ENGINEER — No. 2934 — HAWAII, U.S.A.

THIS WORK WAS PREPARED BY ME OR UNDER MY SUPERVISION

STATE OF HAWAII
DEPARTMENT OF TRANSPORTATION
HIGHWAYS DIVISION

UTILITIES PLAN
RELOCATED TONGG RANCH ROAD
STA. 18+00.00 TO STA. 28+25.00

FORT WEAVER ROAD
SOUTH OF FARRINGTON HIGHWAY
TO THE VICINITY OF RENTON ROAD

SCALE: 1" = 50' DATE: SEPT 1979

SHEET No. 3U OF 8U SHEETS

C.O. 136

DATE	REVISION
6/23/81	Repositioned J.P. #141X, 142X & 143. Added Anchors to J.P. #141, 142 & 142X. Deleted Adjustments to Signal Corps Cables at Sta. 162+50 Rt. Added Reference Note for new Sht. C.O. 1395-1. Deleted HTCo. Pullbox at J.P. #142. Added BWS Reapproval Block.

FED. ROAD DIST. NO.	STATE	FED. AID PROJ. NO.	FISCAL YEAR	SHEET NO.	TOTAL SHEETS
HAWAII	HAW.	M-7600(2)	1980	137	244

OAHU SUGAR CO. 6" WATER LINE NOTES

N.I.C.

1. Begin Oahu Sugar Co. Water Line Sta. 0+00 = ℄ Ft. Weaver Rd. Sta. 167+00±, 68'± Rt. Remove exist. 6" Bend and Connect to 6" Main
   1-6" Sleeve, 15" long (L.J.), 1-6" 1/32 Bend
   8 L.F. 6" D.I. Pipe, Class 52
   1-Temp. Cleanout w/M.J. Cap (For Testing) (BWS Standards, March 77, Fig. 54)
2. Oahu Sugar Co. Water Line Sta. 1+14 = ℄ Ft. Weaver Rd. Sta. 168+14±, 68'± Rt.
   1-6" 1/8 Bend
   1-6" 1/16 Bend
   1-6" 1/32 Bend
3. Oahu Sugar Co. Water Line Sta. 1+54 = ℄ Ft. Weaver Rd. Sta. 168+20±, 30'± Rt.
   1-6" 1/16 Bend
4. Oahu Sugar Co. Water Line Sta. 1+79 = ℄ Ft. Weaver Rd. Sta. 168+23±, 7'± Rt.
   1-6" 1/32 Bend
5. Oahu Sugar Co. Water Line Sta. 2+52 = ℄ Ft. Weaver Rd. Sta. 168+34±, 70'± Lt.
   1-6" 1/16 Bend
6. Oahu Sugar Co. Water Line Sta. 2+80 = ℄ Ft. Weaver Rd. Sta. 168+39±, 100'± Lt.
   2-6" 1/8 Bends
   5 L.F. 6" D.I. Pipe, Class 52
7. Oahu Sugar Co. Water Line Sta. 2+85 = ℄ Ft. Weaver Rd. Sta. 168+37±, 103'± Lt.
   1-6" 1/16 Bend, 1-6" Sleeve, 15" Long (L.J.)
   8 L.F. 6" D.I. Pipe, Class 52
   1-Temp. Cleanout w/M.J. Cap (For Testing) (BWS Standards, March 77, Fig. 54)

NOTES: a. Contractor shall determine the exact location and elevation of tie-in points (1) and (7) prior to performing any work on Oahu Sugar Company 6-Inch Water Line.

b. 2 1/2" depth of lead for lead joint pipe required at all embedded joints. Wherever construction joints are required 6" rubber or neoprene waterstops shall be installed. Waterstop shall be of the type specified and manufactured by the Kirkhill Rubber Company, or approved equal.

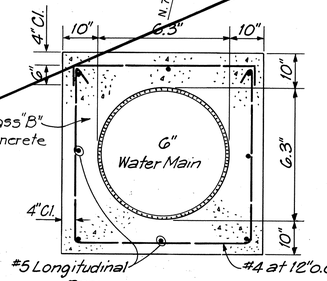

N.I.C.

CONCRETE JACKET
N.T.S.

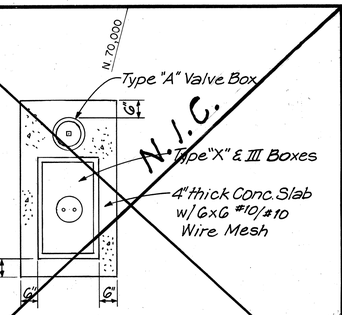

N.I.C.

CONCRETE SLAB DETAIL FOR METER BOX IN DIRT AREA (BWS)
N.T.S.

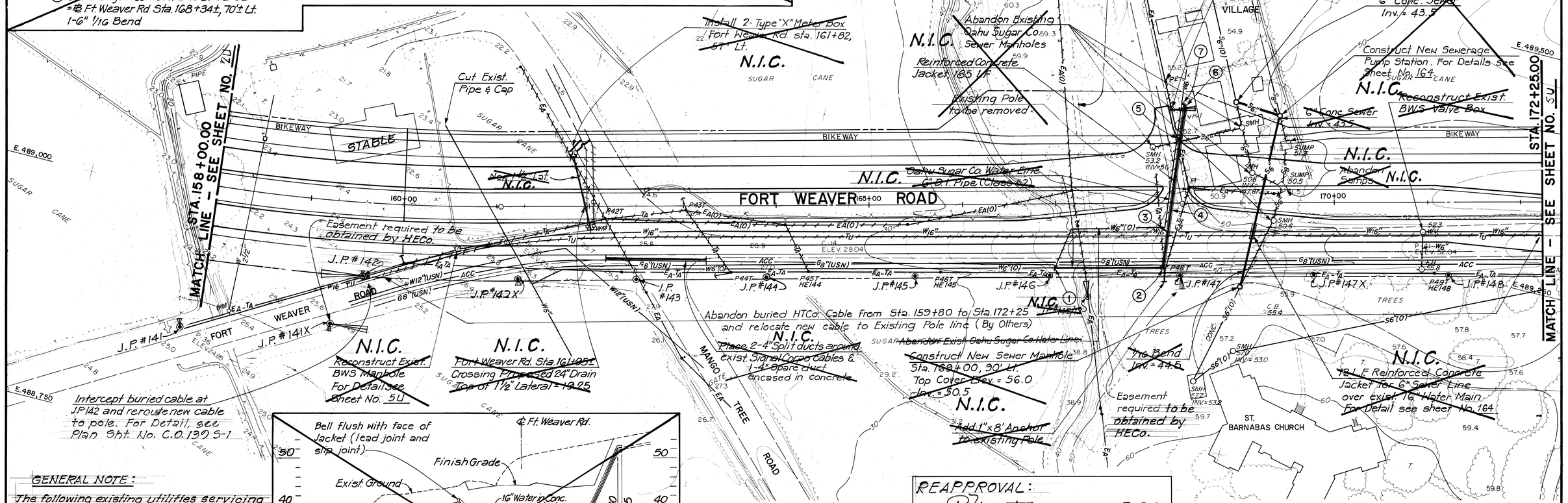

GENERAL NOTE:

The following existing utilities servicing Lower Village are to remain in service in this contract and shall not be removed or demolished, unless otherwise directed by the Engineer:

1. Electric Aerial ($E_A(O)$)
2. Telephone Aerial
3. Water Main ($W_6(O)$) and Sewer Mains (S_6, S_8) and appurtenances

The existing Mango Tree Road Water Line laterals are also to remain in service.

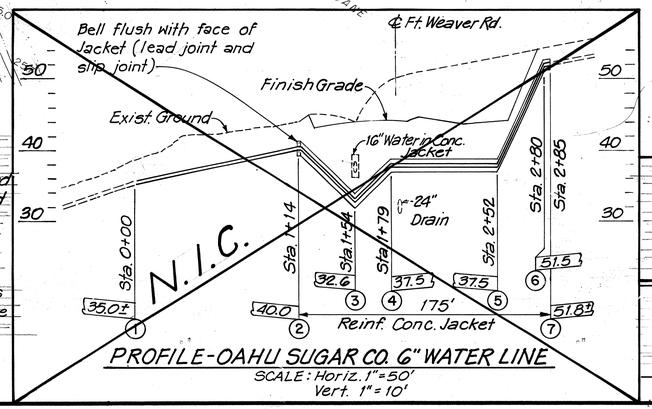

PROFILE - OAHU SUGAR CO. 6" WATER LINE
SCALE: Horiz. 1" = 50'
Vert. 1" = 10'

PROPOSED ROADWAY CONSTRUCTION WORK SHOWN ON THIS SHEET TO BE BUILT IN FUTURE CONTRACT, EXCEPT FOR UTILITIES RELOCATION WORK NOTED.

FOR ADDITIONAL UTILITY ADJUSTMENTS AT NEW CANE HAUL ROAD CROSSING FWR STA. 159+50 RT., SEE SHT. NO. C.O. 1395-1.

REAPPROVAL:

R. Uyeda 7-9-81
for Chief, Planning & Engineering, BWS — Date

R. Uyeda 3-6-79
for Chief, Planning & Engineering, BWS — Date

10/24/79
Hawaiian Electric Co., Inc. — Date

11-8-79
Hawaiian Telephone Co. — Date

ANTHONY F. D'ALESSIO REGISTERED PROFESSIONAL ENGINEER No. 2934 HAWAII, U.S.A.

THIS WORK WAS PREPARED BY ME OR UNDER MY SUPERVISION

STATE OF HAWAII
DEPARTMENT OF TRANSPORTATION
HIGHWAYS DIVISION

UTILITIES PLAN
FORT WEAVER ROAD
STA. 158+00.00 TO STA. 172+25.00

FORT WEAVER ROAD
SOUTH OF FARRINGTON HIGHWAY
TO THE VICINITY OF RENTON ROAD

SCALE: 1" = 50' DATE: SEPT 1979

SHEET No. 4U OF 8U SHEETS

C.O. 137

ORIGINAL PLAN	
SURVEY PLOTTED BY	
DRAWN BY	
TRACED BY	
DESIGNED BY	
QUANTITIES BY	
CHECKED BY	
NOTE BOOK	
No.	
DATE	

FED. ROAD DIST. NO.	STATE	FED. AID PROJ. NO.	FISCAL YEAR	SHEET NO.	TOTAL SHEETS
HAWAII	HAW.	M-7600(2)	1980	138	244

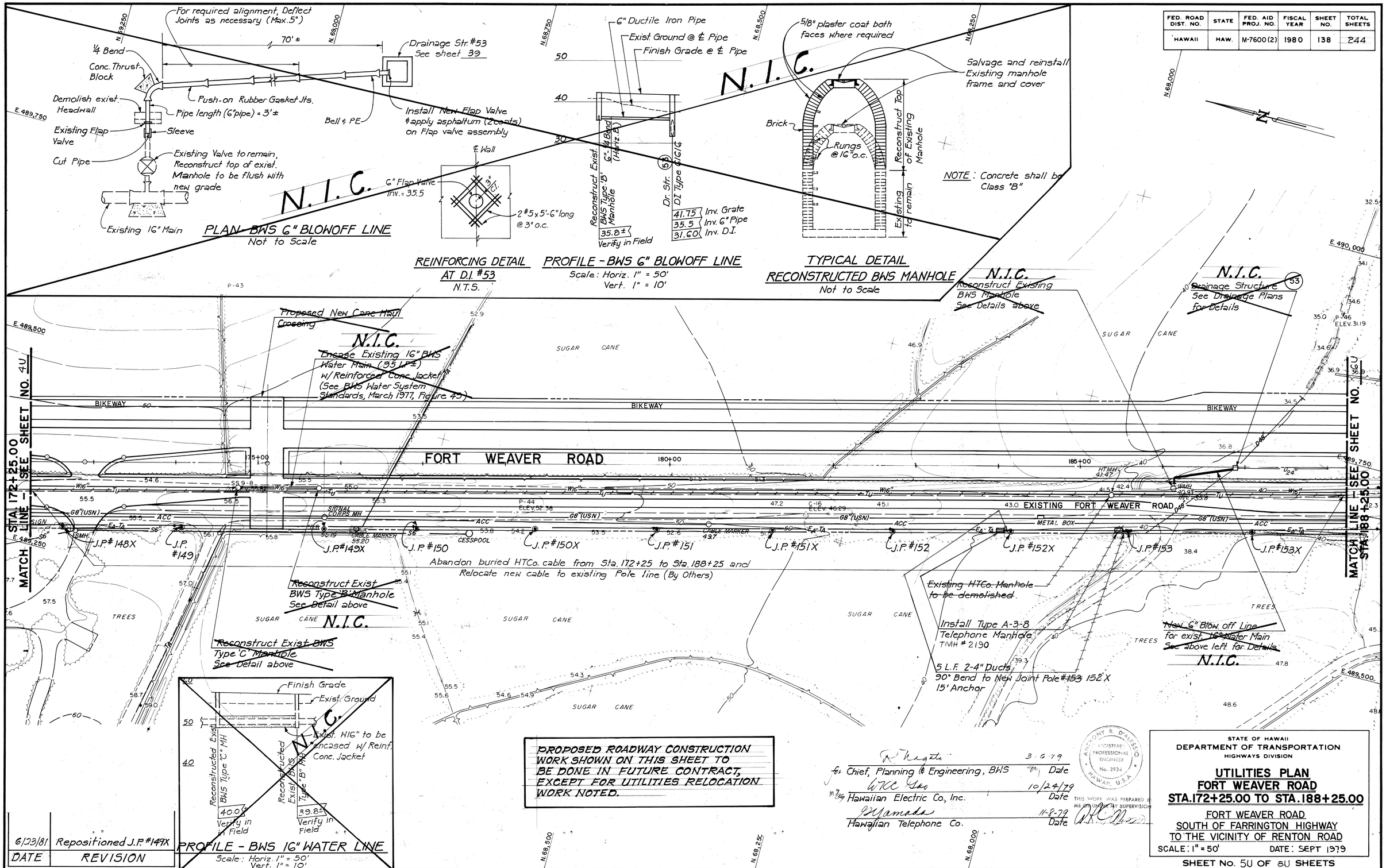

DATE	REVISION
6/23/81	Repositioned J.P. #149X

SURVEY PLOTTED BY
DRAWN BY
TRACED BY
DESIGNED BY
QUANTITIES BY
CHECKED BY
DATE
ORIGINAL PLAN
NOTE BOOK
NO.

R. Nagata 3-6-79
for Chief, Planning & Engineering, BWS Date

W.K.C. Yee 10/24/79
Hawaiian Electric Co., Inc. Date

D. Yamada 11-8-79
Hawaiian Telephone Co. Date

ANTHONY S. DELISO REGISTERED PROFESSIONAL ENGINEER No. 2934 HAWAII, U.S.A.

THIS WORK WAS PREPARED BY ME OR UNDER MY SUPERVISION

STATE OF HAWAII
DEPARTMENT OF TRANSPORTATION
HIGHWAYS DIVISION

UTILITIES PLAN
FORT WEAVER ROAD
STA. 172+25.00 TO STA. 188+25.00

FORT WEAVER ROAD
SOUTH OF FARRINGTON HIGHWAY
TO THE VICINITY OF RENTON ROAD

SCALE: 1" = 50' DATE: SEPT 1979

SHEET No. 5U OF 8U SHEETS

C.0.138

FED. ROAD DIST. NO.	STATE	FED. AID PROJ. NO.	FISCAL YEAR	SHEET NO.	TOTAL SHEETS
HAWAII	HAW.	M-7600(2)	1980	139	244

CONSTRUCTION PHASING NOTES

1. State's Contractor to expose existing ductline as required under HECo.'s supervision.
2. HECo. to break the concrete encasement around the exist. ducts which are to remain in place as a protective guard for the existing energized 12 KV Cables.
3. State's Contractor to construct the 4x6 handhole over the exposed ductline under HECo's supervision and to construct the new duct system to proposed pole (J.P. 156/1).
4. HECo. to install and remove cables and to break the existing ducts upon completion of the 4x6 handhole and the duct system by the State's Contractor.

U.S. NAVY ELECT. NOTES

1. Contractor shall notify Roy Higa (Ph. 471-3549) or Robert Tamura (Ph. 471-0125) of Navy Public Works Center before commencing work.
2. Removed materials shall be abandoned.
3. Contractor shall stake out new pole & anchor location for Navy's approval before installation.
4. New pole shall be Class 3, fully creosoted by the pressure method. Anchor shall be 3/4" x 8.0' galv. anchor rod with 18" deadman; see detail on Sht. No. 143.
5. ~~Contractor~~ HECo. shall furnish & install primary metering equipment. ~~in accordance with HECO Eng. Std. 4.5060, except that the inside Potential Transformer shall be deleted.~~ Contractor to Provide two meter sockets, one each KWH & KVARH, at mounting height of 5.0' min. & 7.0' max. Both sockets shall be 13-Jaw (See HECO Cat. No. 121413), Circle AW Type. All sockets shall be grounded per HECO Std.

SPECIAL NOTE TO STATE'S CONTRACTOR

The existing cables which are in ductlines are energized. These energized insulated cables are to remain in place during Construction. Only HECo Men are to handle these cables and to erect temporary Guards to protect these cables from damages. Contractor to exercise due care and precautions to avoid disturbance of energized cables, temporary guards, etc. and shall work cautiously to avoid accidents.

STANDARD OIL NOTES (CHEVRON USA INC.)

1. All costs pertaining to damage of the pipelines, their coatings, or their cathodic protection devices or damage of property and injury to persons caused directly or indirectly by this work, will be charged to the Contractor.
2. Trenches across pipelines shall be limited to a maximum width of 5 feet unless the lines are supported in a manner acceptable to Chevron U.S.A. Inc.
3. All excavations and backfilling operations in Chevron U.S.A. Inc. easements must be witnessed by a Chevron Representative. All backfill material within 6 inches of the pipelines must be of finely graded dirt or sand. All excavations within 2 feet of pipelines must be accomplished by hand digging. Work shall be handled in a expeditious manner in order to keep the pipeline uncovered for as short a period as possible.
4. The Contractor shall notify Chevron USA Inc. by calling 682-5711 2 weeks before beginning any work within Chevron USA Inc. easement.

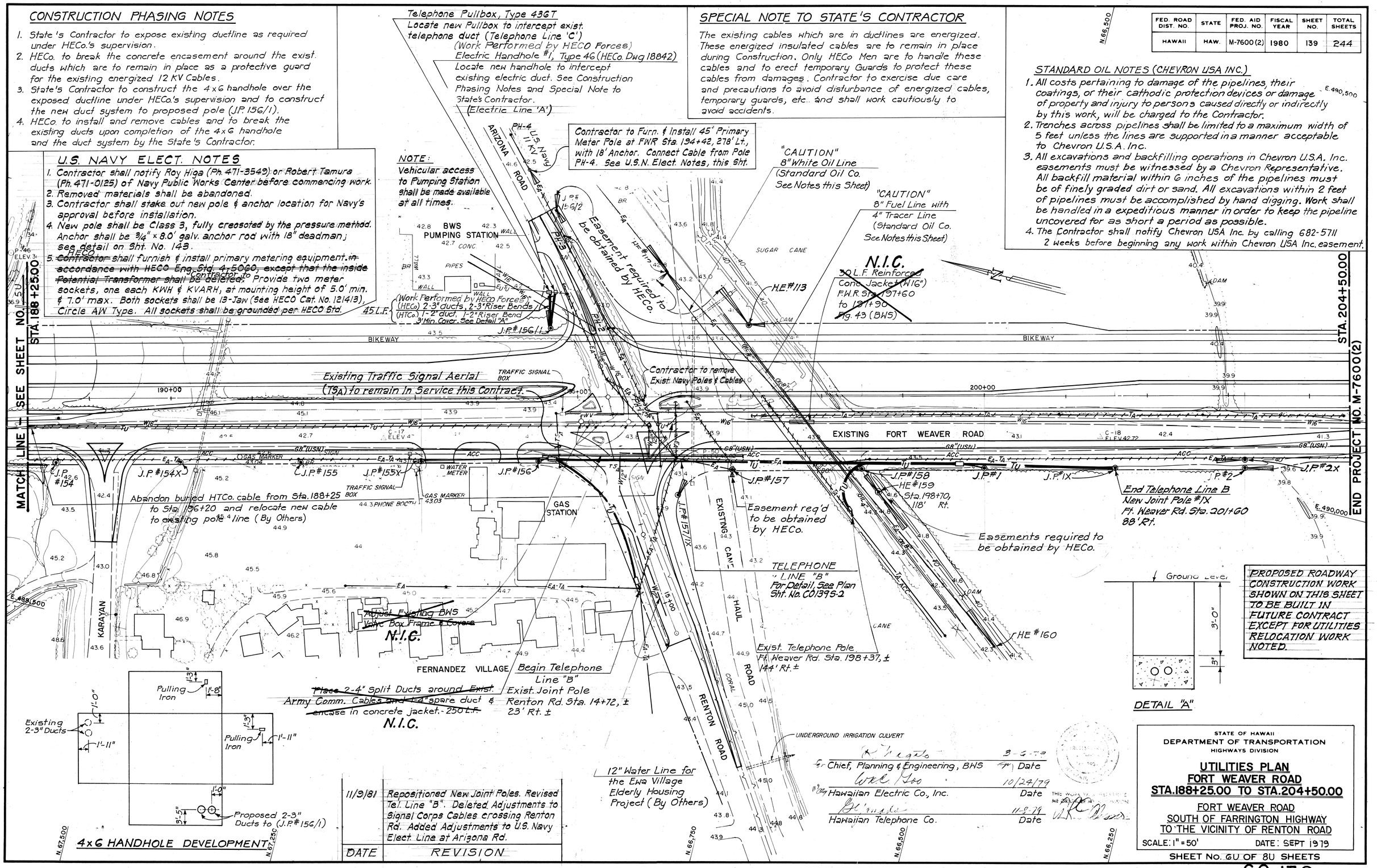

DATE	REVISION
11/9/81	Repositioned New Joint Poles. Revised Tel. Line "B". Deleted Adjustments to Signal Corps Cables crossing Renton Rd. Added Adjustments to U.S. Navy Elect. Line at Arizona Rd.

For Chief, Planning & Engineering, BWS	3-6-79 Date
Hawaiian Electric Co., Inc.	10/24/79 Date
Hawaiian Telephone Co.	11-8-79 Date

STATE OF HAWAII
DEPARTMENT OF TRANSPORTATION
HIGHWAYS DIVISION

UTILITIES PLAN
FORT WEAVER ROAD
STA. 188+25.00 TO STA. 204+50.00

FORT WEAVER ROAD
SOUTH OF FARRINGTON HIGHWAY
TO THE VICINITY OF RENTON ROAD

SCALE: 1" = 50' DATE: SEPT 1979

SHEET No. 6U OF 8U SHEETS

C0 139

FED. ROAD DIST. NO.	STATE	FED. AID PROJ. NO.	FISCAL YEAR	SHEET NO.	TOTAL SHEETS
HAWAII	HAW.	M-7600(2)	1981	C.O.139S-1	244

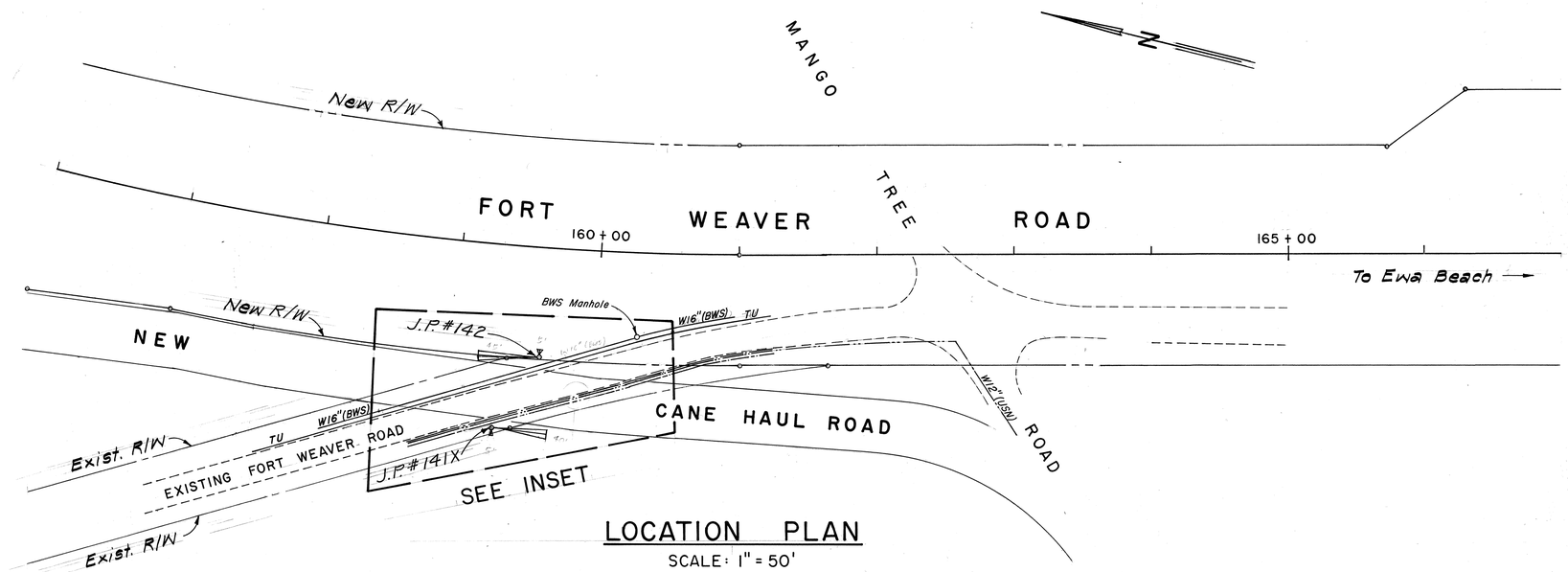

LOCATION PLAN

SCALE: 1" = 50'

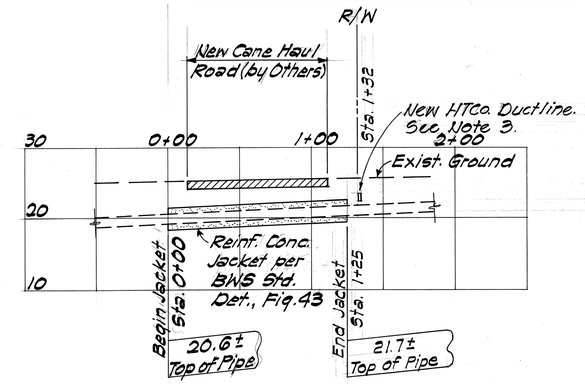

PROFILE - BWS 16" MAIN

Scale: Horiz. 1" = 50'
Vert. 1" = 10'

BWS NOTES

1. Maintain 3.0' minimum cover from top of pipe.
2. Extend reinf. conc. jacket as necessary to terminate at the closest pipe joint.
3. Provide 6" min. clearance bet. ductline & water main.

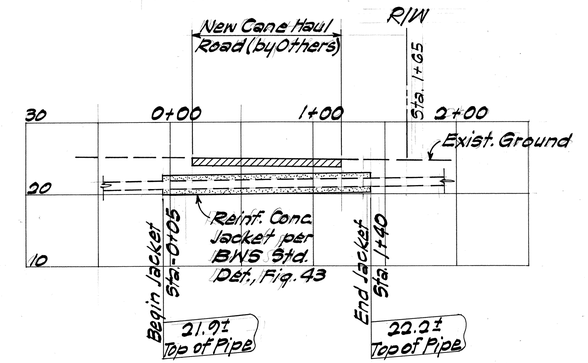

PROFILE - USN 12" MAIN

Scale: Horiz. 1" = 50'
Vert. 1" = 10'

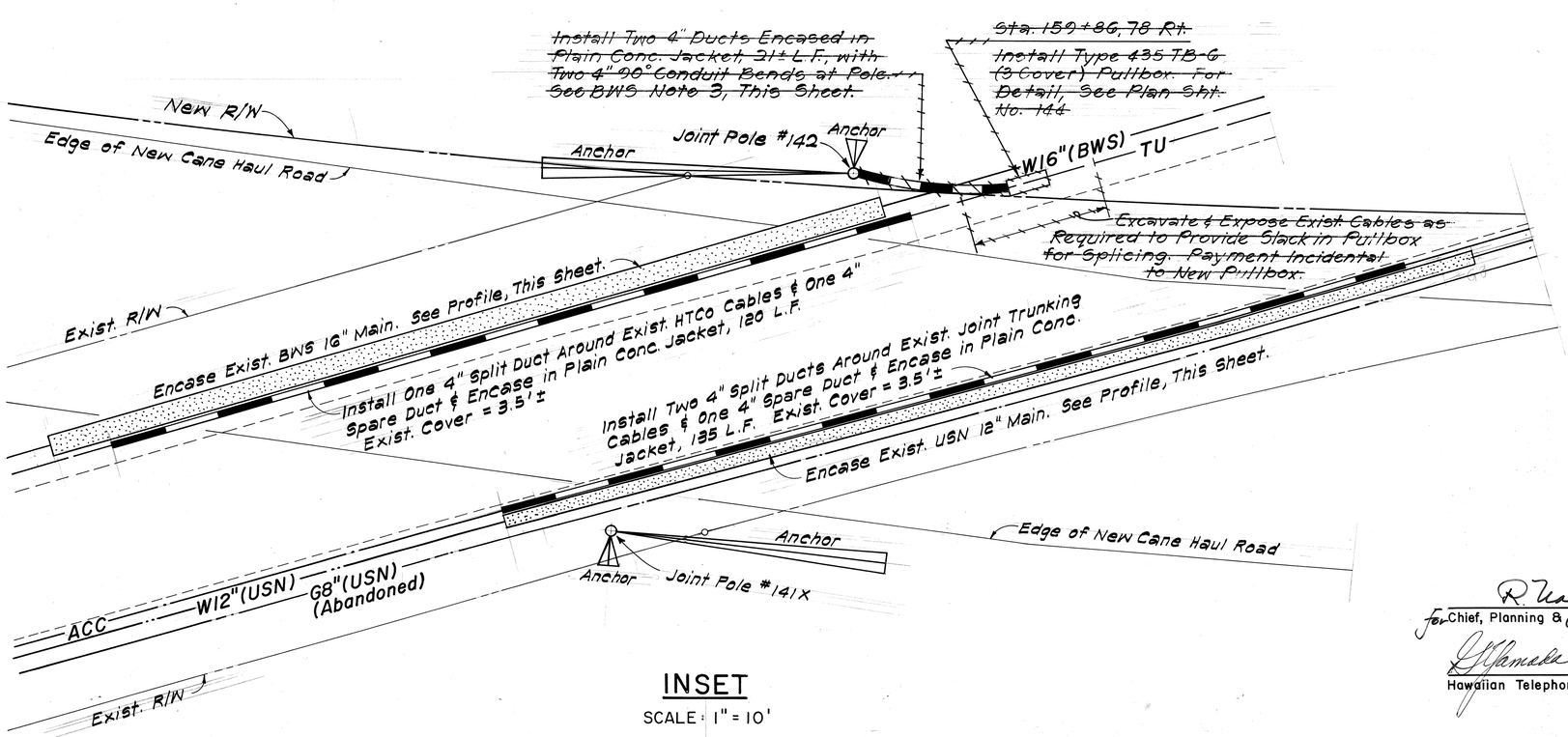

INSET

SCALE: 1" = 10'

ORIGINAL PLAN		DATE
	SURVEY PLOTTED BY	
	TRACING BY	
	TRACED BY	
NOTE BOOK	DESIGNED BY	
No.	QUANTITIES BY	
	CHECKED BY	

R. Nagata
for Chief, Planning & Engineering, BWS — 7-9-81 Date

G. Yamada
Hawaiian Telephone Co. — 7-30-81 Date

STATE OF HAWAII
DEPARTMENT OF TRANSPORTATION
LAND TRANSPORTATION FACILITIES DIVISION

UTILITIES PLAN
FORT WEAVER ROAD
NEW CANE HAUL ROAD CROSSING

FORT WEAVER ROAD
SOUTH OF FARRINGTON HIGHWAY
TO THE VICINITY OF RENTON ROAD

SCALES: AS SHOWN DATE: JUNE 1981

SHEET No. 6UA OF 8U SHEETS

C.O. 139 S-1

FED. ROAD DIST. NO.	STATE	FED. AID PROJ. NO.	FISCAL YEAR	SHEET NO.	TOTAL SHEETS
HAWAII	HAW.	M-7600(2)	1982	CO 139 S-2	244

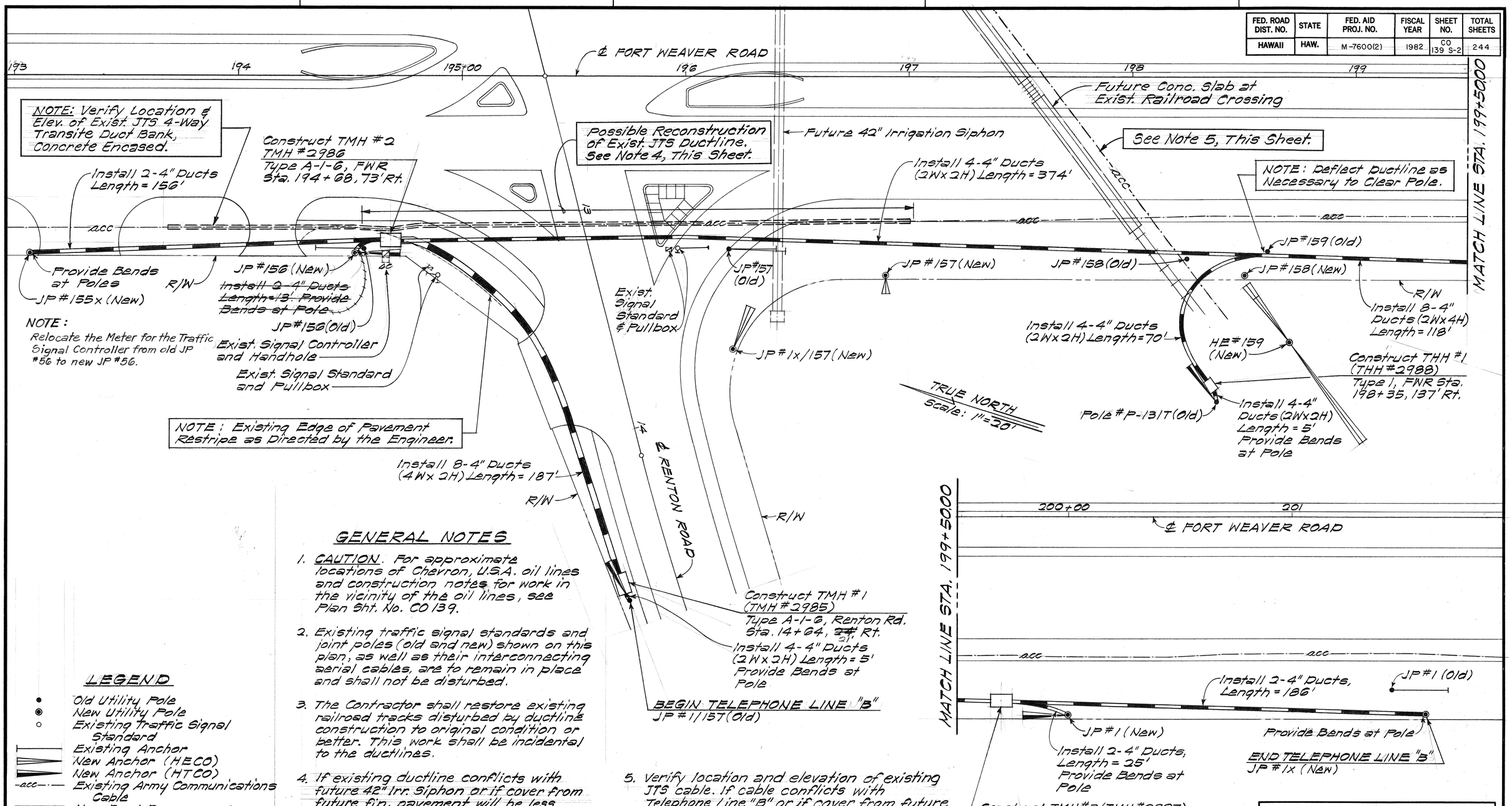

GENERAL NOTES

1. CAUTION. For approximate locations of Chevron, U.S.A. oil lines and construction notes for work in the vicinity of the oil lines, see Plan Sht. No. CO 139.
2. Existing traffic signal standards and joint poles (old and new) shown on this plan, as well as their interconnecting aerial cables, are to remain in place and shall not be disturbed.
3. The Contractor shall restore existing railroad tracks disturbed by ductline construction to original condition or better. This work shall be incidental to the ductlines.
4. If existing ductline conflicts with future 42" Irr. Siphon or if cover from future fin. pavement will be less than 3.0' min., Contractor shall break duct bank as directed by the Engineer. Reconstruct to new elevation by installing 2-4" split ducts and one 4" spare duct around existing cables and encase in plain concrete jacket.
5. Verify location and elevation of existing JTS cable. If cable conflicts with Telephone Line "B" or if cover from future fin. pavement will be less than 3.0' min., Engineer shall notify HTCO for abandonment. Otherwise, the cable is to remain in place.

LEGEND

- Old Utility Pole
- New Utility Pole
- Existing Traffic Signal Standard
- Existing Anchor
- New Anchor (HECO)
- New Anchor (HTCO)
- acc — Existing Army Communications Cable
- New Duct Encasement
- Existing Pullbox or Handhole for Traffic Signals
- tc — Existing Traffic Signal Controller
- New Handhole or Manhole
- Existing Duct Encasement

ORIGINAL PLAN	SURVEY PLOTTED BY	DATE
	DRAWN BY	
	TRACED BY	
NOTE BOOK	DESIGNED BY	
	QUANTITIES BY	
No.	CHECKED BY	

LAYOUT ~ TELEPHONE LINE "B"

APPROVED:

M. Yamada — 11-13-81

HAWAIIAN TELEPHONE Co. — DATE

STATE OF HAWAII
DEPARTMENT OF TRANSPORTATION
LAND TRANSPORTATION FACILITIES DIVISION

UTILITIES PLAN
FORT WEAVER ROAD
TEL. LINE "B", JTS ADJUSTMENTS

FORT WEAVER ROAD
SOUTH OF FARRINGTON HIGHWAY
TO THE VICINITY OF RENTON ROAD

SCALE: 1" = 20' DATE: OCT. 1981

SHEET No. 6U OF 8U SHEETS

CO 139 S-2

FED. ROAD DIST. NO.	STATE	FED. AID PROJ. NO.	FISCAL YEAR	SHEET NO.	TOTAL SHEETS
HAWAII	HAW.	M-7600(2)	1980	140	244

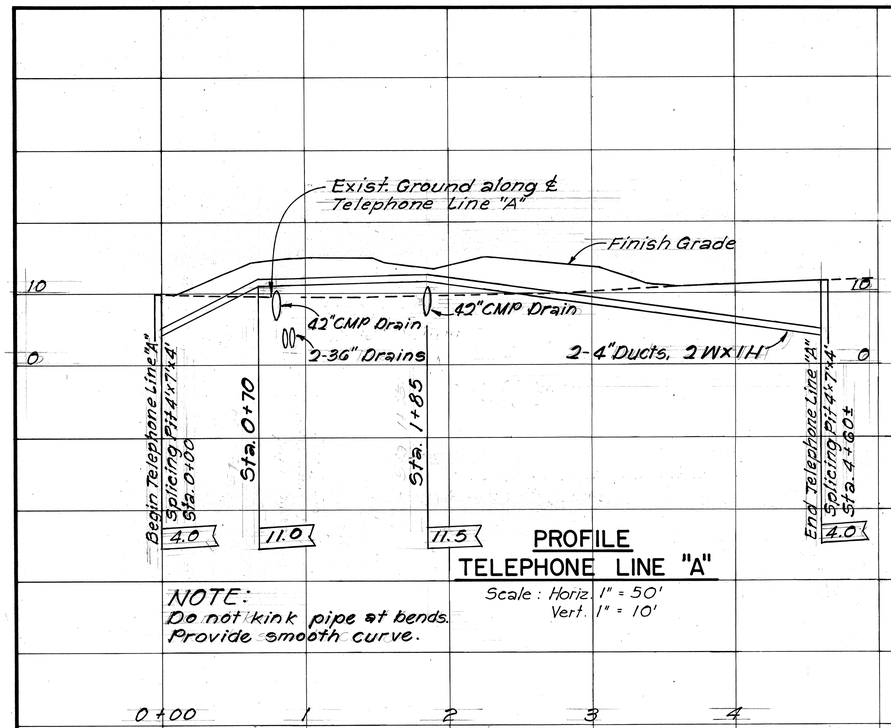

PROFILE
TELEPHONE LINE "A"
Scale: Horiz. 1" = 50'
Vert. 1" = 10'

NOTE:
Do not kink pipe at bends.
Provide smooth curve.

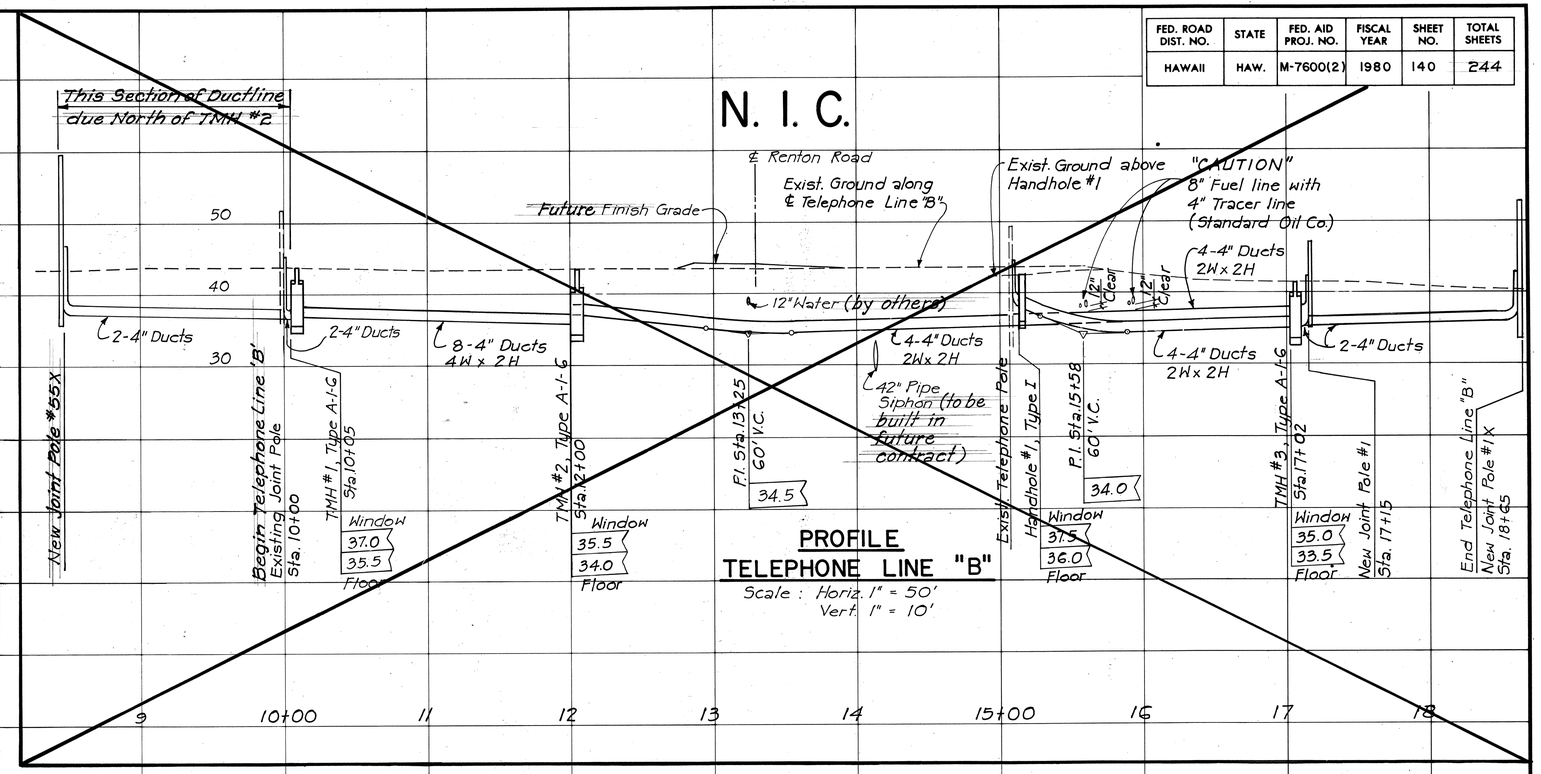

PROFILE
TELEPHONE LINE "B"
Scale: Horiz. 1" = 50'
Vert. 1" = 10'

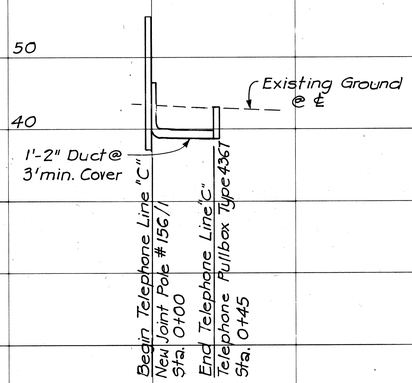

PROFILE
TELEPHONE LINE "C"
Scale: Horiz. 1" = 50'
Vert. 1" = 10'

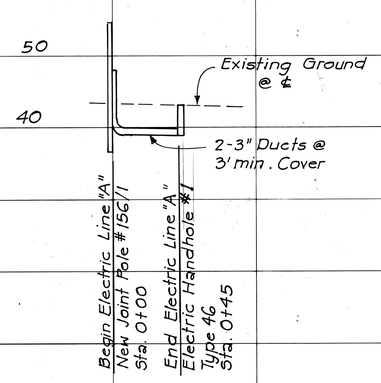

(Work Performed by HECO Forces)

PROFILE
ELECTRIC LINE "A"
Scale: Horiz. 1" = 50'
Vert. 1" = 10'

11/9/81	Deleted Profile-Telephone Line "B"	
3/31/81	Second Revision to Telephone Line "A" Profile.	
2/4/81	Revised Telephone Line "A" Profile.	
DATE	REVISION	

ORIGINAL PLAN	SURVEY PLOTTED BY	DATE
	DRAWN BY	
	TRACED BY	
	DESIGNED BY	
NOTE BOOK	QUANTITIES BY	
No.	CHECKED BY	

W. Wilson
Hawaiian Electric Co. — 2-22-80 Date

R. Yamada
Hawaiian Telephone Co. — 11-8-79 Date

ANTHONY R. D'ALESSIO
REGISTERED PROFESSIONAL ENGINEER
No. 2934
HAWAII, U.S.A.

THIS WORK WAS PREPARED BY ME OR UNDER MY SUPERVISION.

STATE OF HAWAII
DEPARTMENT OF TRANSPORTATION
HIGHWAYS DIVISION

UTILITIES PROFILES

FORT WEAVER ROAD
SOUTH OF FARRINGTON HIGHWAY
TO THE VICINITY OF RENTON ROAD

SCALE: HORIZ.: 1"=50' VERTICAL: 1"=10'
DATE: SEPT 1979

SHEET No. 7U OF 8U SHEETS

CO 140

DATE	REVISION
11/9/81	Added Missing Duct Window at Manhole No. 2. Added Cardinal Point Designations to each Manhole Detail.

FED. ROAD DIST. NO.	STATE	FED. AID PROJ. NO.	FISCAL YEAR	SHEET NO.	TOTAL SHEETS
HAWAII	HAW.	M-7600(2)	1980	141	244

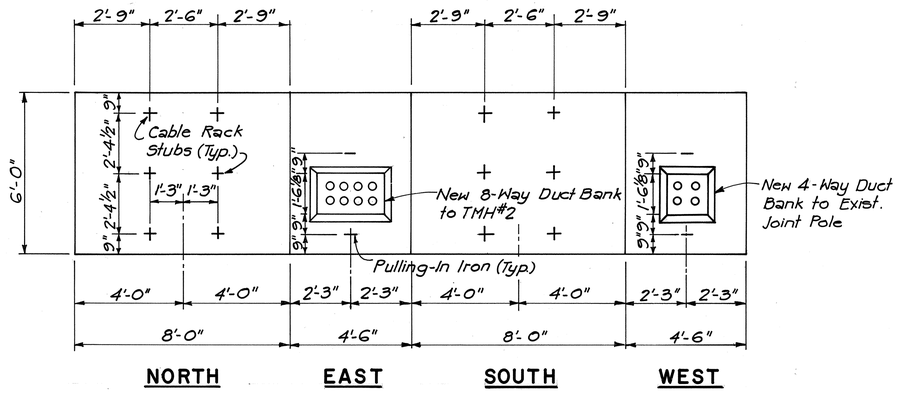

TYPE A-1-6 MANHOLE NO. 1

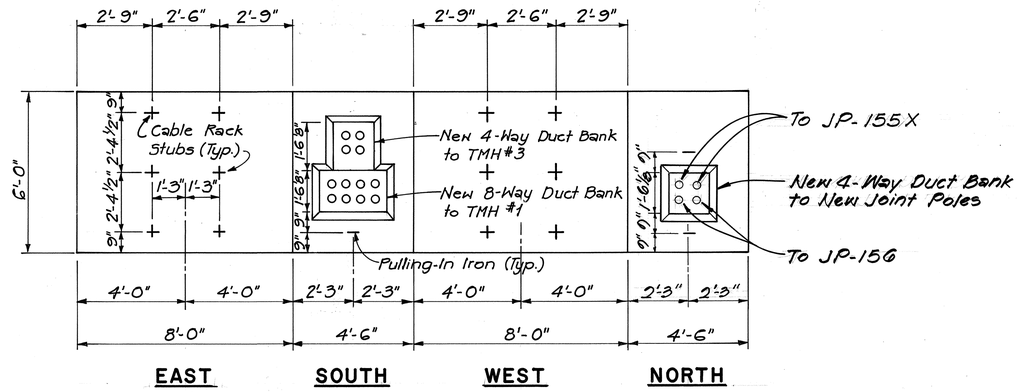

TYPE A-1-6 MANHOLE NO. 2

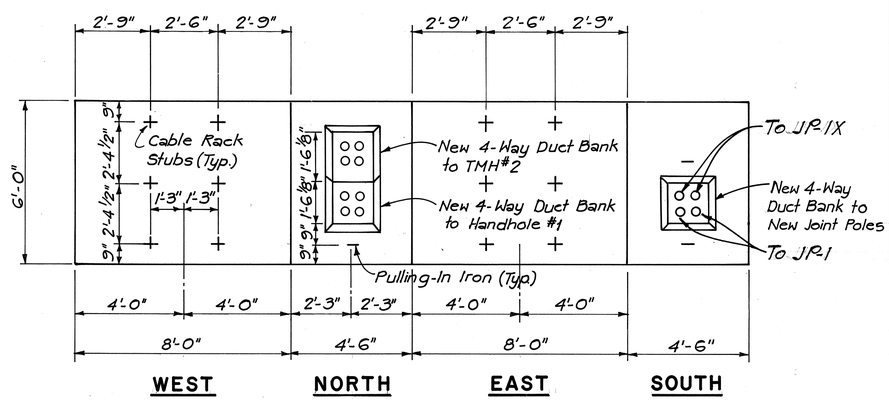

TYPE A-1-6 MANHOLE NO. 3

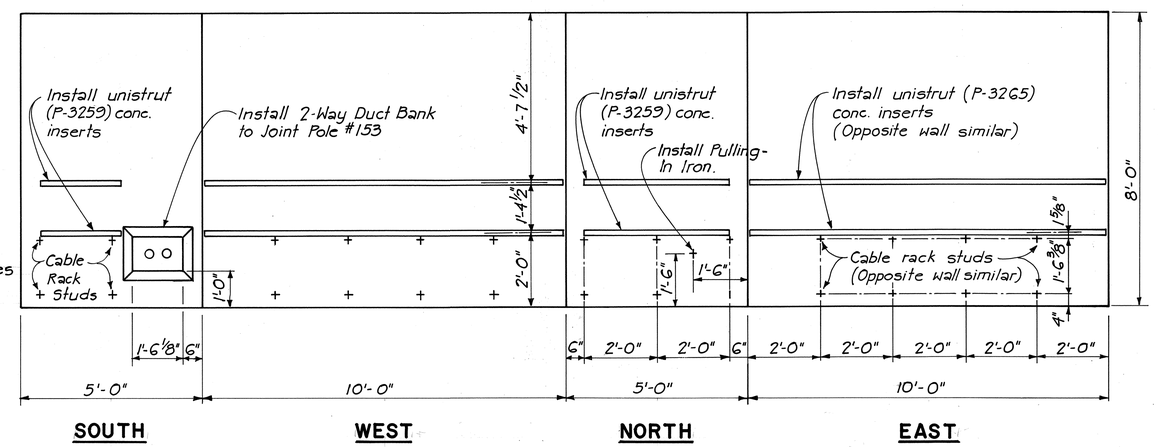

TYPE A-3-8 MANHOLE

ANTHONY R. D'ALESSIO
REGISTERED PROFESSIONAL ENGINEER
No. 2934
HAWAII, U.S.A.

THIS WORK WAS PREPARED BY ME OR UNDER MY SUPERVISION.

G. Yamada
Hawaiian Telephone Co.

11-8-79
Date

STATE OF HAWAII
DEPARTMENT OF TRANSPORTATION
LAND TRANSPORTATION FACILITIES DIVISION

MANHOLE WALL ELEVATIONS - TELEPHONE

FORT WEAVER ROAD
SOUTH OF FARRINGTON HIGHWAY
TO THE VICINITY OF RENTON ROAD

DATE: SEPT 1979

SHEET NO. 80 OF 80 SHEETS

CO 141

ORIGINAL PLAN
SURVEY PLOTTED BY
DRAWN BY
TRACED BY
DESIGNED BY
QUANTITIES BY
CHECKED BY
DATE
NOTE BOOK
NO.

FED. ROAD DIST. NO.	STATE	FED. AID PROJ. NO.	FISCAL YEAR	SHEET NO.	TOTAL SHEETS
HAWAII	HAW.	M-7600(2)	1980	142	244

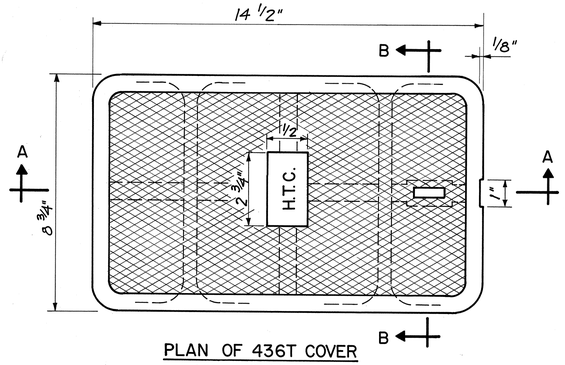

PLAN OF 436T COVER
WT = 17 LBS
Scale : 3/8" = 1"

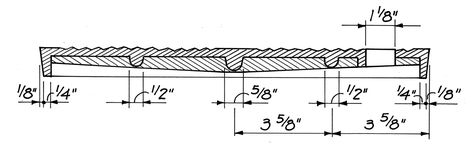

SECTION "A-A"
Scale : 3/8" = 1"

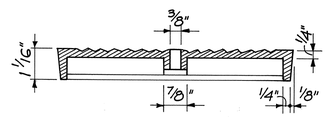

SECTION "B-B"
Scale : 3/8" = 1"

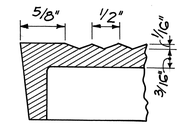

CHECKERED PATTERN

NOTES

Thickness dimensions are net.
Add 1/8" for raised surface. Use 1" high vertical letters. Meter Cover shall be Gray Cast Iron, free of blister, blowholes, warpage and cold shuts.

436T PULLBOX COVER

CAST IRON

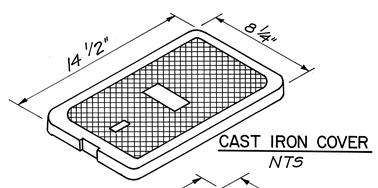

CAST IRON COVER
NTS

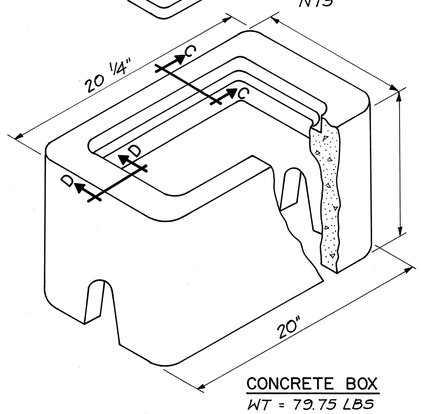

CONCRETE BOX
WT = 79.75 LBS
NTS

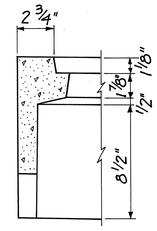

SECTION "C-C"
Scale : 3/16" = 1"

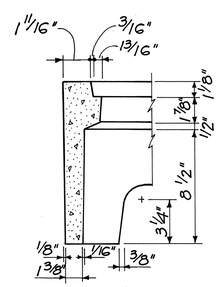

SECTION "D-D"
Scale : 3/16" = 1"

436T METER-TYPE PULLBOX

ORIGINAL PLAN	SURVEY PLOTTED BY	DATE
	DRAWN BY	
	TRACED BY	
NOTE BOOK	DESIGNED BY	
	QUANTITIES BY	
No.	CHECKED BY	

G. Yamada
Hawaiian Telephone Co.

11-8-79
Date

ANTHONY R. D'ALESSIO
REGISTERED PROFESSIONAL ENGINEER
No. 2934
HAWAII, U.S.A.

THIS WORK WAS PREPARED BY ME OR UNDER MY SUPERVISION.

STATE OF HAWAII
DEPARTMENT OF TRANSPORTATION
LAND TRANSPORTATION FACILITIES DIVISION

PULLBOX - TYPE 436T

FORT WEAVER ROAD
SOUTH OF FARRINGTON HIGHWAY
TO THE VICINITY OF RENTON ROAD

DATE : SEPT 1979

SHEET No. 1 OF 1 SHEETS

FED. ROAD DIST. NO.	STATE	FED. AID PROJ. NO.	FISCAL YEAR	SHEET NO.	TOTAL SHEETS
HAWAII	HAW.	M-7600(2)	1980	143	244

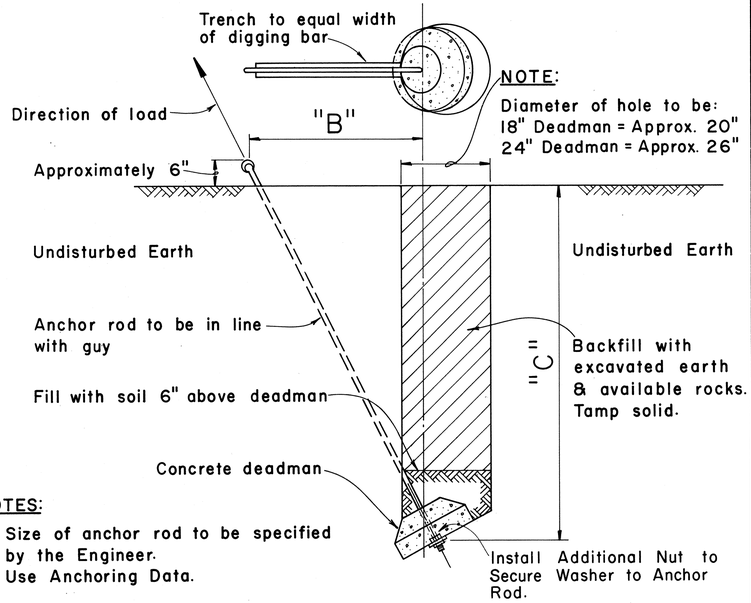

NOTE:
Diameter of hole to be:
18" Deadman = Approx. 20"
24" Deadman = Approx. 26"

NOTES:
1. Size of anchor rod to be specified by the Engineer.
2. Use Anchoring Data.

STANDARD ANCHOR DETAIL
Scale: 3/4" = 1'-0"

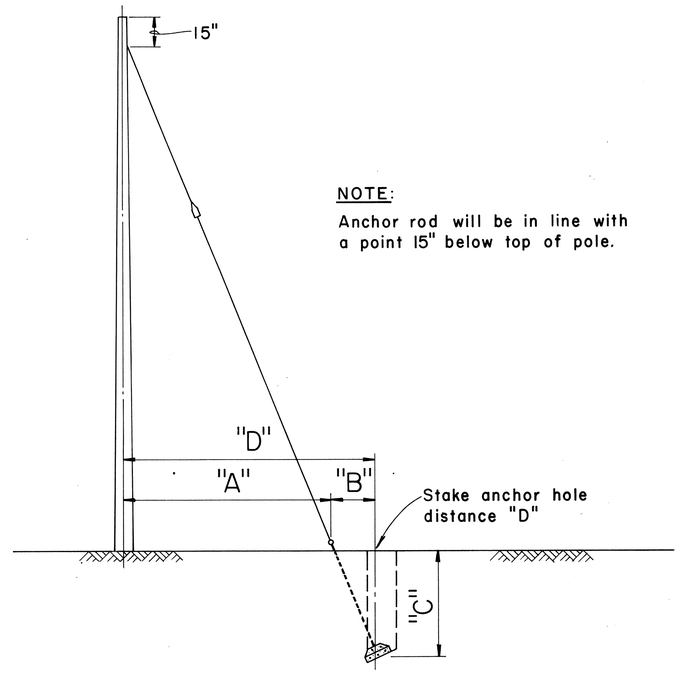

NOTE:
Anchor rod will be in line with a point 15" below top of pole.

Not to Scale

FOR 25', & 30' POLES WITH 8'-0" ANCHOR RODS				
"A"	"B"	"C"		"D" = ("A" + "B")
ANCHOR ROD EYE TO ℄ OF POLE	ANCHOR ROD EYE TO ℄ OF HOLE	VERTICAL DEPTH 18" D.M.	VERTICAL DEPTH 24" D.M.	TOTAL DISTANCE POLE TO HOLE
5'-0"	1'-8"	7'-1"	7'-4"	6'-8"
10'-0"	3'-0"	6'-7"	7'-0"	13'-0"
15'-0"	4'-0"	6'-1"	6'-6"	19'-0"
20'-0"	4'-8"	5'-6"	5'-10"	24'-8"
25'-0"	5'-2"	4'-11"	5'-4"	30'-2"
FOR 35' THRU 60' POLES WITH 8'-0" ANCHOR RODS				
5'-0"	1'-0"	7'-3"	7'-4"	6'-0"
10'-0"	1'-11"	7'-1"	7'-3"	11'-11"
15'-0"	2'-8"	6'-9"	7'-1"	17'-8"
20'-0"	3'-3"	6'-6"	6'-10"	23'-3"
25'-0"	3'-10"	6'-2"	6'-7"	28'-10"
FOR 40' THRU 60' POLES WITH 1 1/4" x 10'-0" ANCHOR RODS				
5'-0"	1'-7"		9'-4"	6'-7"
10'-0"	3'-0"		9'-0"	13'-0"
15'-0"	4'-2"		8'-6"	19'-2"
20'-0"	5'-3"		7'-11"	25'-3"
25'-0"	6'-2"		7'-3"	31'-2"

D.M. = Deadman

TABLE 2 ANCHOR ROD - ANCHOR SLUG - SQUARE WASHER COMBINATION

CODE NO.	ANCHOR ROD	WORKING TENSION 1/2 ULT (LBS.)	CODE NO.	CONC. ANC. (IN.)	CODE NO.	WASHER SIZE	QTY.
617	5/8" x 8'-0" Steel	8,000	518	18	2320	4" x 4" x 3/16"	2
614	3/4" x 8'-0" Cu Clad	13,250	518	18	**	4" x 4" x 3/16"	2
618	3/4" x 8'-0" Steel	11,500	518	18	2330	6" x 6" x 3/8"	1
619	1" x 8'-0" Steel	18,000	524	24	2331	6" x 6" x 1/2"	1
616	1" x 8'-0" Cu Cov Stl	22,500	524	24	**	4" x 4" x 3/16"	2
613	1-1/4" x 10'-0" Steel	29,000	524	24	2331	6" x 6" x 1/2"	2

** Use bronze square washers included in anchor rod assembly on copper covered steel (Cu Cov Stl) anchor rods.

ANCHORING DATA

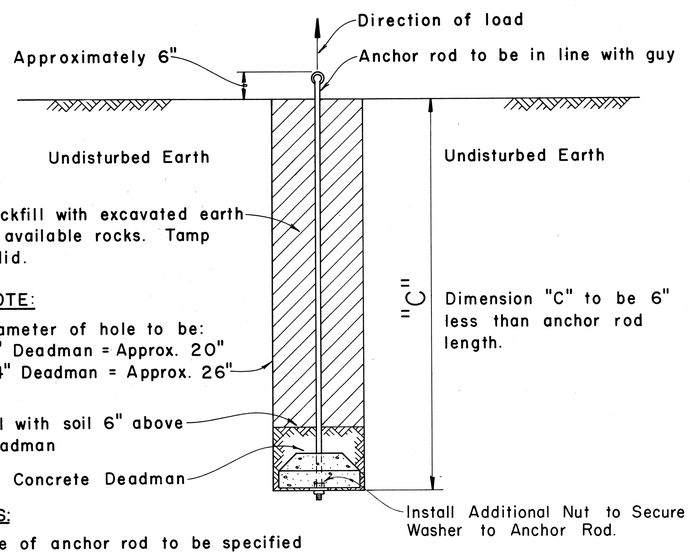

NOTE:
Diameter of hole to be:
18" Deadman = Approx. 20"
24" Deadman = Approx. 26"

NOTES:
1. Size of anchor rod to be specified by the Engineer.
2. Use Anchoring Data.

SIDEWALK ANCHOR DETAIL
Scale: 3/4" = 1'-0"

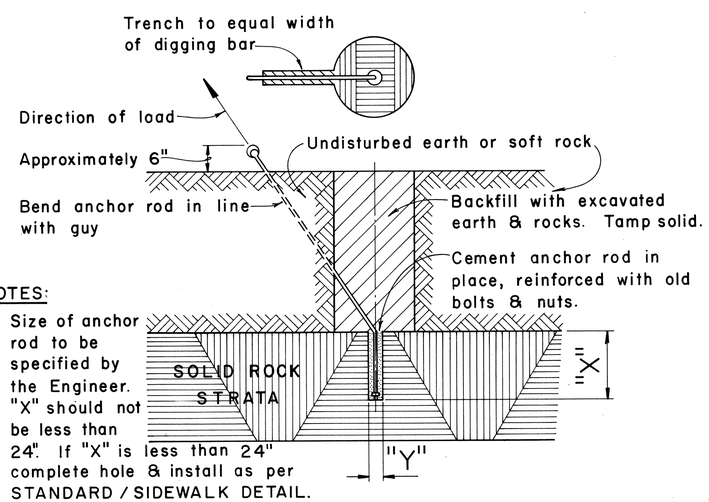

NOTES:
1. Size of anchor rod to be specified by the Engineer.
2. "X" should not be less than 24". If "X" is less than 24" complete hole & install as per STANDARD / SIDEWALK DETAIL.
3. "Y" 5/8" Anchor rod drill 2" hole
   3/4" Anchor rod drill 2" hole
   1" Anchor rod drill 2 1/2" hole
   1 1/4" Anchor rod drill 3" hole
4. Use Anchoring Data.

ROCK ANCHOR DETAIL
Not to Scale

APPROVED:

N/A
HAWAIIAN ELECTRIC Co., Inc. DATE

N/A
HAWAIIAN TELEPHONE Co. DATE

STATE OF HAWAII
DEPARTMENT OF TRANSPORTATION
HIGHWAYS DIVISION

STANDARD DETAILS

H.E.Co. AND H.T.Co.
ANCHOR DETAILS AND ANCHORING DATA

Scales: As Noted Date: Mar., 1979

DD-630.001 SHEET No. 1 OF 8 SHEETS

ORIGINAL PLAN	SURVEY PLOTTED BY	DATE
	DRAWN BY	"
	TRACED BY	"
NOTE BOOK	DESIGNED BY	"
No.	QUANTITIES BY	"
	CHECKED BY	"

FED. ROAD DIST. NO.	STATE	FED. AID PROJ. NO.	FISCAL YEAR	SHEET NO.	TOTAL SHEETS
HAWAII	HAW.	M-7600 (2)	1980	144	244

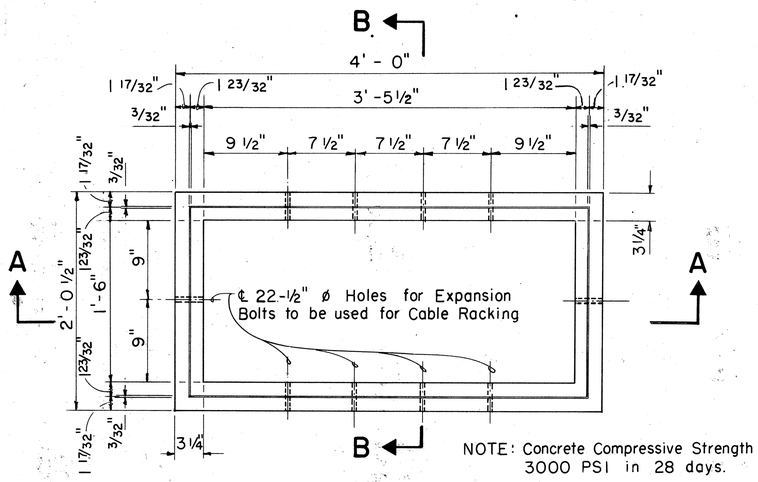

PLAN

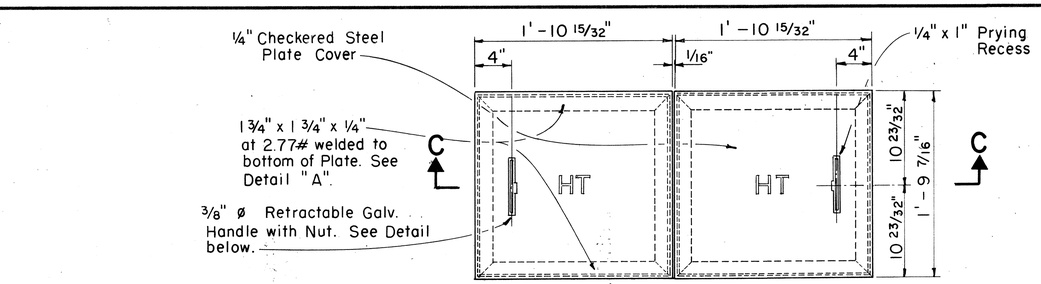

PLAN

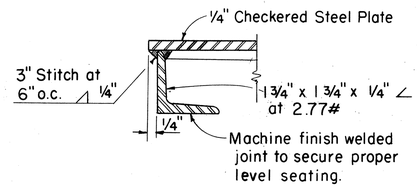

DETAIL A

SCALE: 6" = 1'-0"

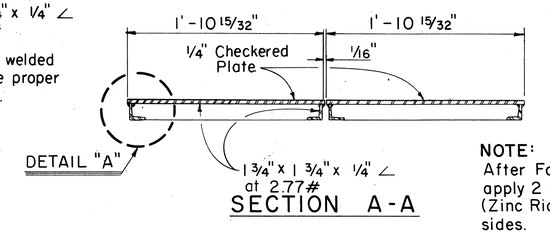

SECTION A-A

NOTE:
After Fabrication of Cover, apply 2 coats of ZRC (Zinc Rich Coating) to both sides.

CHECKERED STEEL PLATE COVERS

FOR LIGHT LOADING AREAS - APPROX. WT. 55 LBS.

SCALE: 1 1/2" = 1'-0" (EXCEPT AS NOTED)

INSTALLATION NOTES:

1. A minimum of Two(2) Precast Sections must be used on all installations.
2. The minimum layers of Bricks to be used shall always be at least One (1) layer lower than the lowest Duct entering the Pullbox. At no time, however, shall there be less than Two (2) layers of Bricks on each installation.
3. At no time shall Cement Mortar, Wood or any other material be used between Precast Sections. Leveling or raising of Boxes to grade must be done at Brickwork Section using Cement Mortar. The permanent installation of Wooden Wedges to accomplish this purpose will not be accepted.
4. For 3-Cover P.B. join 435TB P.B. Half Section to Full Section using Strap and Bolts as shown in 3-Cover P.B. Section Plan.

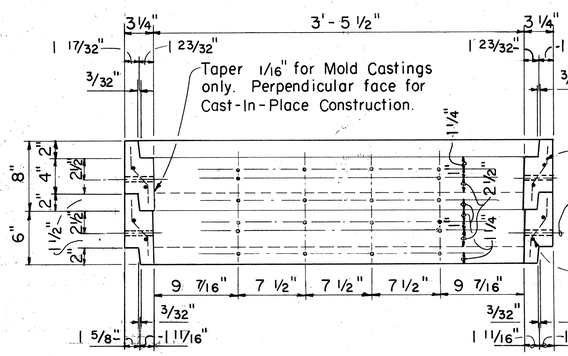

SECTION A-A

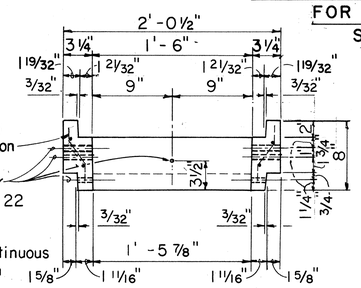

SECTION B-B

PULLBOX #435 T-B

SCALE: 1 1/2" = 1'-0"

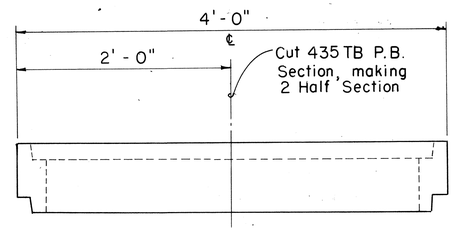

435TB P.B. SECTION

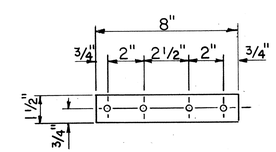

STRAP DETAIL

1/4" BAR

SCALE: 3" = 1'- 0"

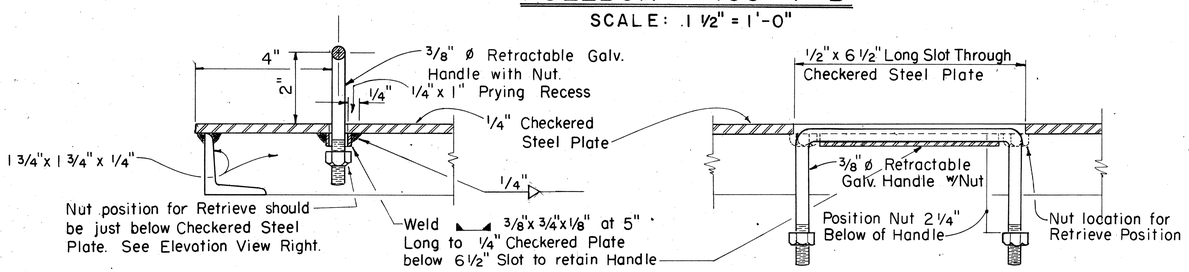

SECTION-RETRIEVE POSITION

ELEVATION-AT REST POSITION

RETRACTABLE HANDLE

SCALE: 6" = 1'-0"

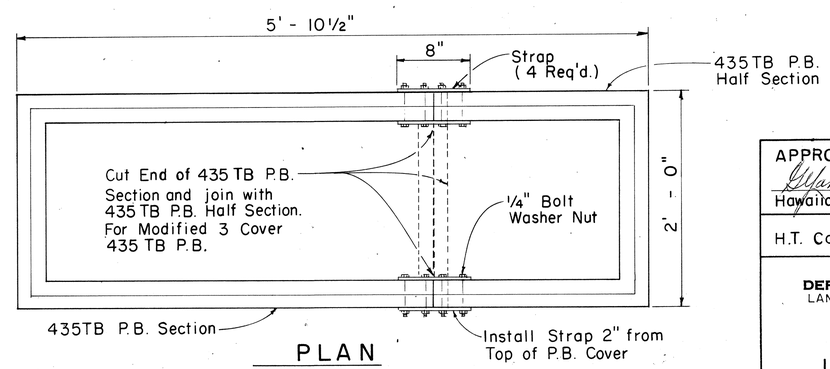

PLAN

MODIFIED 3-COVER P.B. SECTION

APPROVED:

G. Yamada — 2-12-80

Hawaiian Telephone Co., Ltd. — Date

H.T. Co., Ltd. — Drawing No. 34056

STATE OF HAWAII
DEPARTMENT OF TRANSPORTATION
LAND TRANSPORTATION FACILITIES DIVISION

LARGE PULLBOX NO. 435 T-B

SHEET No. 2 OF 8 SHEETS

ORIGINAL PLAN		DATE
	SURVEY PLOTTED BY	
	DRAWN BY	
	TRACED BY	
NOTE BOOK	DESIGNED BY	
	QUANTITIES BY	
No.	CHECKED BY	

K+E IMPERIAL™ TRACING CLOTH LA 3207

FED. ROAD DIST. NO.	STATE	FED. AID PROJ. NO.	FISCAL YEAR	SHEET NO.	TOTAL SHEETS
HAWAII	HAW.	M-760012	1980	145	244

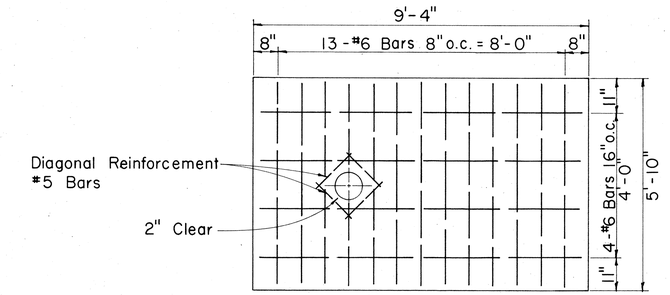

FLOOR SLAB REINF. PLAN
Scale: 1/2" = 1'-0"

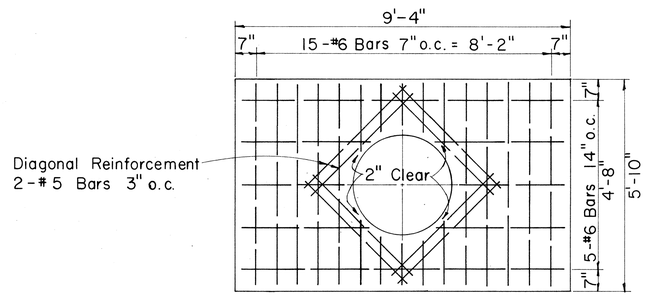

ROOF SLAB REINF. PLAN
Scale: 1/2" = 1'-0"

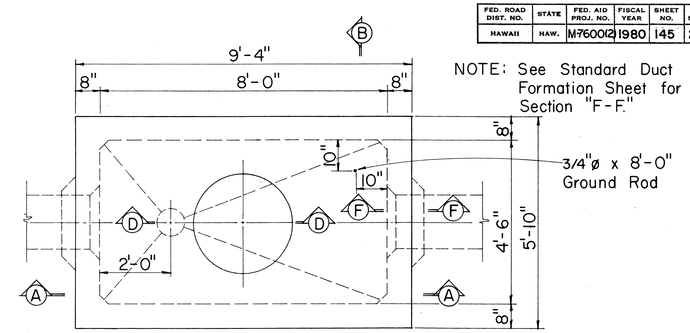

PLAN M.H. TYPE "A-1"
FOR ROADWAY & SIDEWALK AREAS
Scale: 1/2" = 1'-0"

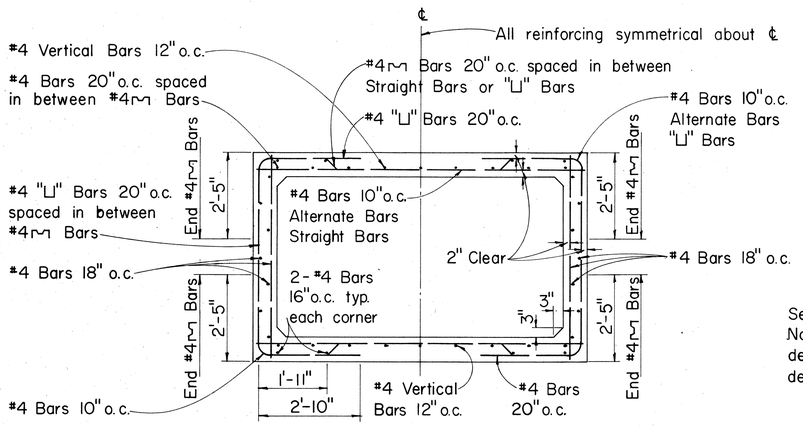

SECTION "C-C"
Scale: 1/2" = 1'-0"

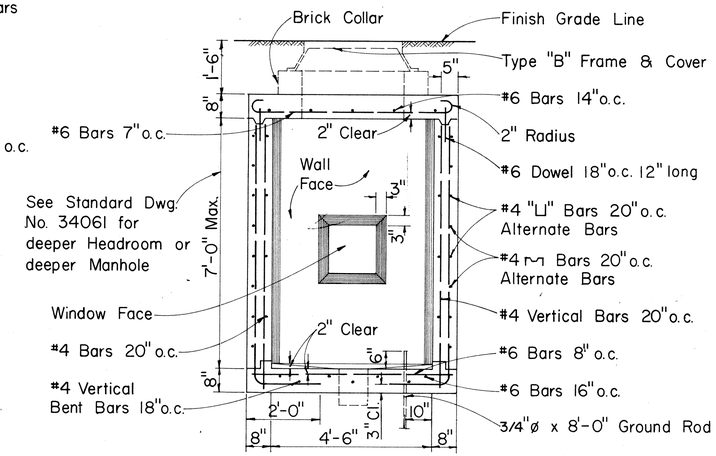

SECTION "B-B"
Scale: 1/2" = 1'-0"

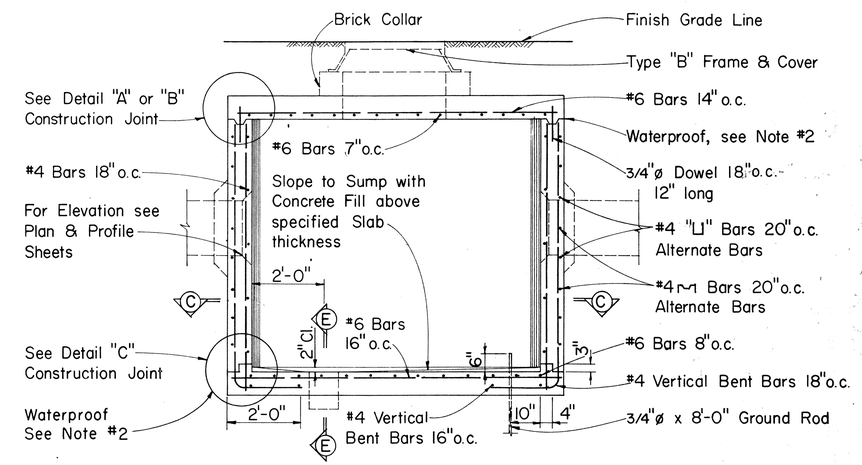

SECTION "A-A"
Scale: 1/2" = 1'-0"

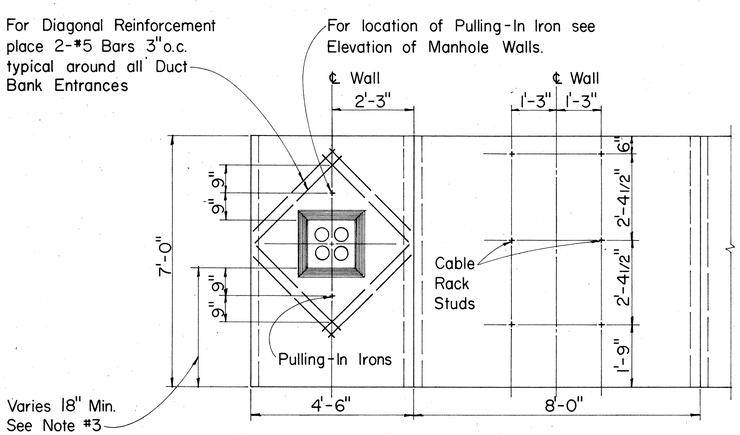

ELEVATION OF M.H. WALLS
(OPPOSITE FACES SIMILAR)
Scale: 1/2" = 1'-0"

GENERAL NOTES

1. Design Data:
   f_s = 20,000 psi; f'_c = 3,000 psi; f_c = 1,350 psi; n = 10
   w = Equivalent Fluid Pressure: 30#/FT^2
2. All Construction Joints shall be waterproofed with two applications of Thoro Seal or equal.
3. For Duct Window location see Plan Profile Sheets for Elevations.
4. Duct Window to suit-See Plan & Profile & Standard Detail Sheets for Location & Details.
5. For Details "A", "B", "C", Sections "D-D", "E-E", "F-F", and other miscellaneous Manhole Construction Details see Supplement Sheet to Type A-1, A-2, and A-3 Telephone Manholes.

Manhole Classification
Width & Length Designation "1" = 4'-6" x 8'-0"
Manhole Headroom

TYPE "A-1" - 6.0'
6.5
7.0

ORIGINAL PLAN	SURVEY PLOTTED BY	DATE
	DRAWN BY	"
	TRACED BY	"
NOTE BOOK	DESIGNED BY	"
No.	QUANTITIES BY	"
	CHECKED BY	"

APPROVED:
G. Yamada 2-12-80
Hawaiian Telephone Co., Ltd. Date
H. T. Co., Ltd. Drawing No. 34060

STATE OF HAWAII
DEPARTMENT OF TRANSPORTATION
LAND TRANSPORTATION FACILITIES DIVISION

TYPE "A-1" MANHOLES FOR 6.0' TO 7.0' HEADROOM

Scale: As Noted Date: SEPT 1979

SHEET No. 3 OF 8 SHEETS

FED. ROAD DIST. NO.	STATE	FED. AID PROJ. NO.	FISCAL YEAR	SHEET NO.	TOTAL SHEETS
HAWAII	HAW.	M-7600 (2)	1980	146	244

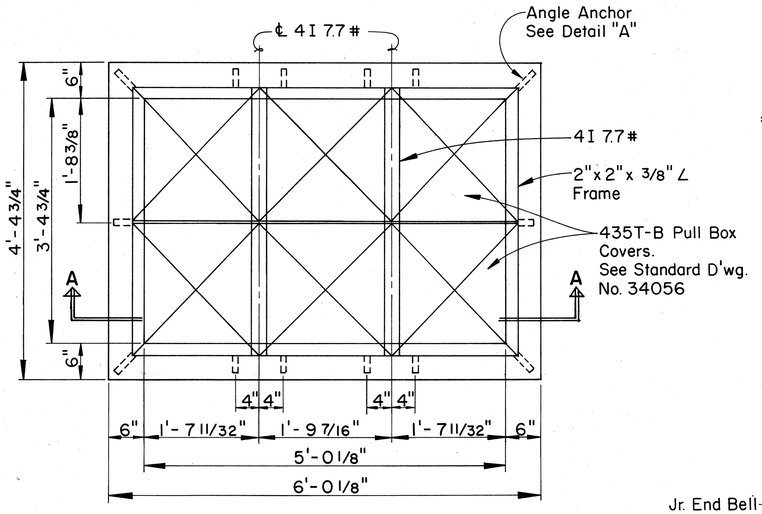

TOP PLAN
Scale: 1"= 1'-0"

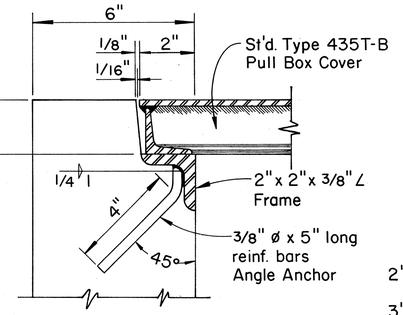

NOTE:
Section is typical.

DETAIL "A"
Scale: 3/8"= 1"

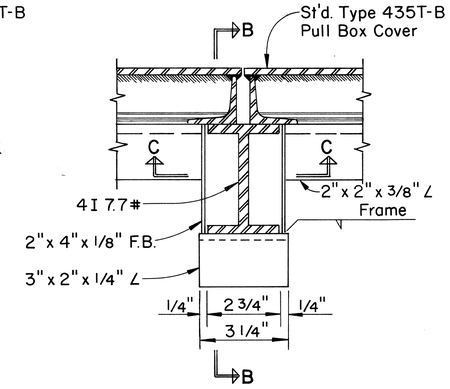

DETAIL "B"
Scale: 3/8"= 1"

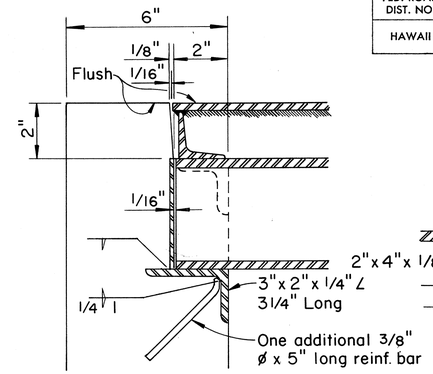

SECTION "B-B"
Scale: 3/8"= 1"

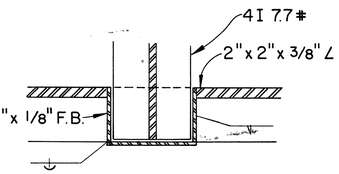

SECTION "C-C"
Scale: 3/8"= 1"

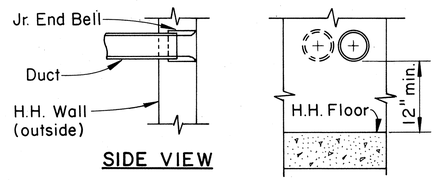

SIDE VIEW
FRONT VIEW

I OR 2 DUCTS
Scale: 1"= 1'-0"

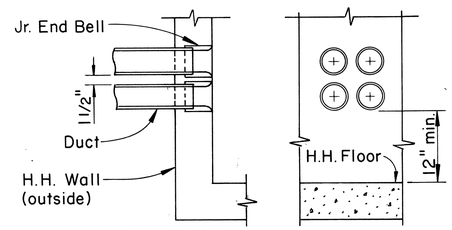

SIDE VIEW OR TOP PLAN
FRONT VIEW
4 DUCTS

DUCT ENTRANCE DETAILS
Scale: 1"= 1'-0"

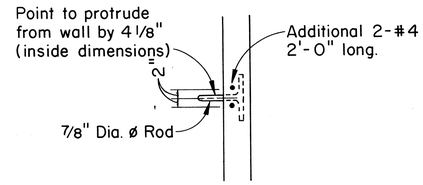

SECTIONAL ELEV. OF PULL-IN IRON
Scale: 3/4"= 1'-0"

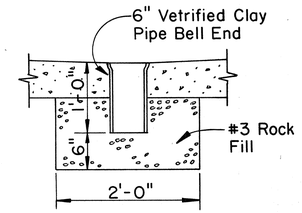

DETAIL OF SUMP
Scale: 1"= 1'-0"

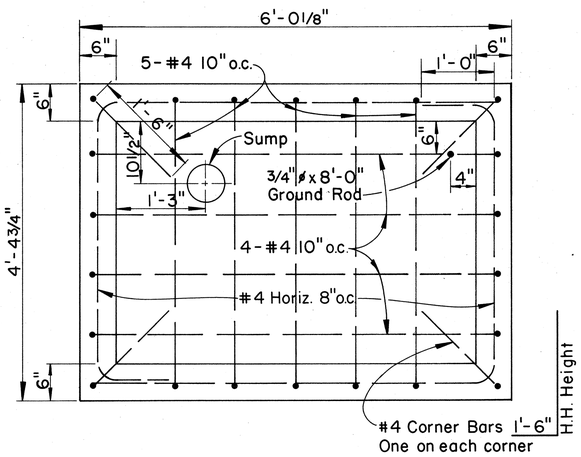

FLOOR PLAN
Scale: 1"= 1'-0"

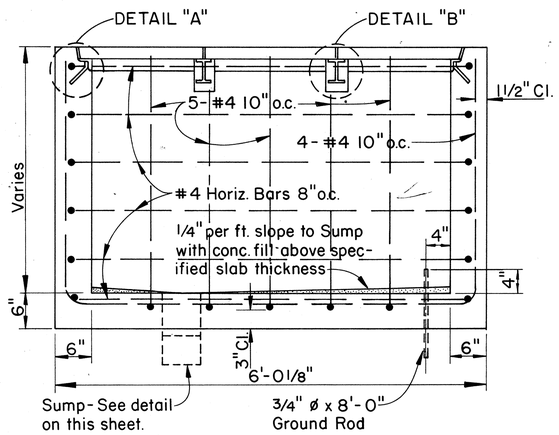

SECTION "A-A"
Scale: 1"= 1'-0"

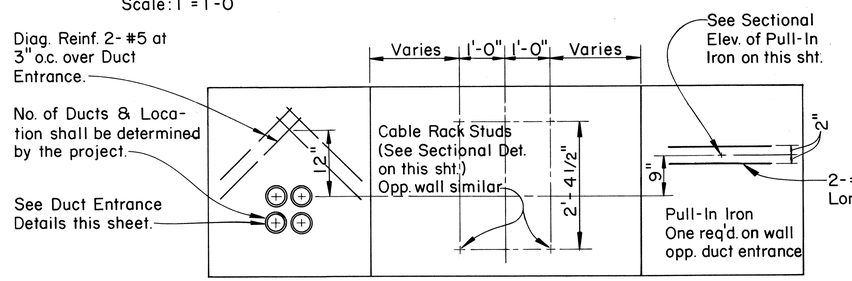

ELEV. OF INSIDE WALLS - H.H. TYPE I
Scale: 3/4"= 1'-0"

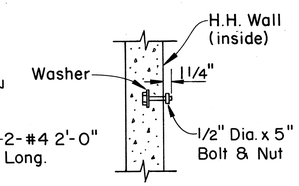

CABLE RACK STUD BOLT DETAIL
Scale: 1"= 1'-0"

GENERAL NOTES:

1. Concrete finish: floors-wood floated finish-exposed wall surfaces and edges-smooth and free from defects.
2. Concrete to develop compressive strength-3000 p.s.i. in 28 days.
3. Steel work all structural steel shall be hot dip galvanized after fabrication.
4. For duct line construction standards, see st'd. dwg. No. 34028.
5. These handholes are designed for installation in areas other than roadways.

ORIGINAL PLAN	SURVEY PLOTTED BY	DATE
	DRAWN BY	
	TRACED BY	
NOTE BOOK	DESIGNED BY	
	QUANTITIES BY	
No.	CHECKED BY	

APPROVED:
Y. Yamada
HAWAIIAN TELEPHONE CO., LTD.
2-12-80
DATE

STATE OF HAWAII
DEPARTMENT OF TRANSPORTATION
LAND TRANSPORTATION FACILITIES DIVISION

STANDARD HANDHOLE TYPE #1 USING TYPE 435T-B PULLBOX COVERS

Scale: As Shown Date: SEPT 1979

SHEET No. 4 OF 8 SHEETS

FED. ROAD DIST. NO.	STATE	FED. AID PROJ. NO.	FISCAL YEAR	SHEET NO.	TOTAL SHEETS
HAWAII	HAW.	M-7600(2)	1980	147	244

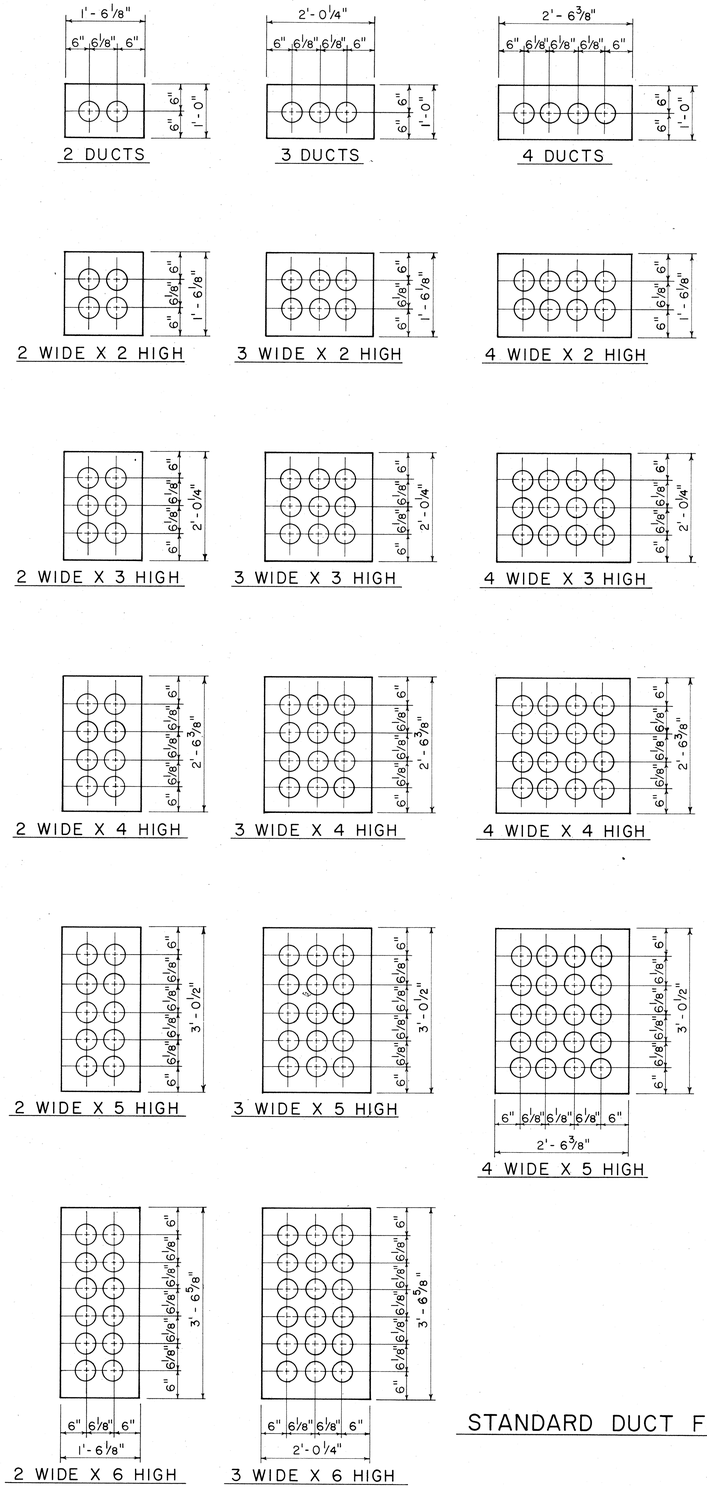

STANDARD DUCT FORMATIONS

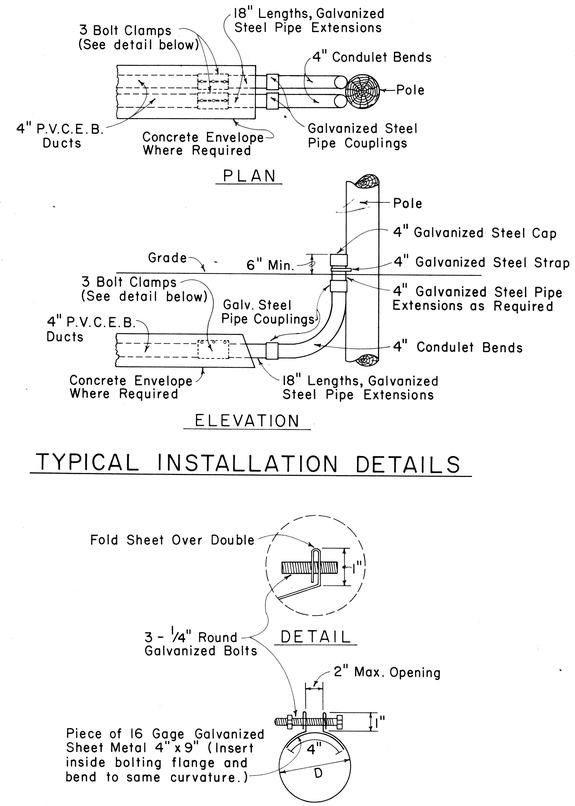

TYPICAL INSTALLATION DETAILS

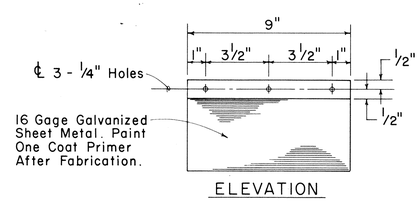

3-BOLT CLAMP ADAPTOR DETAIL

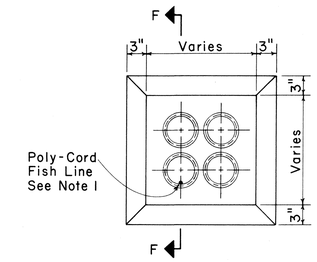

TYPICAL MANHOLE DUCT WINDOW

NOTE:

1. The contractor shall place poly-cord fish line in each duct throughout it's entire length with protrusions of 2 feet in manholes and handholes at each end and 1 foot in pullboxes.

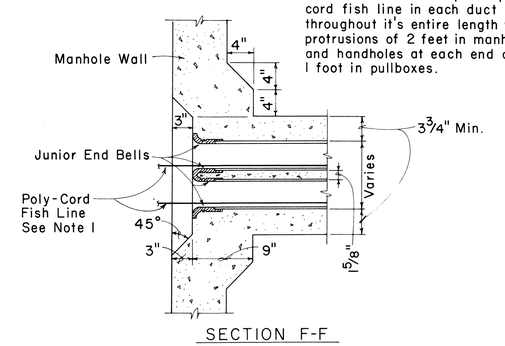

TYPICAL DUCT WINDOW DETAIL & JUNIOR END BELL

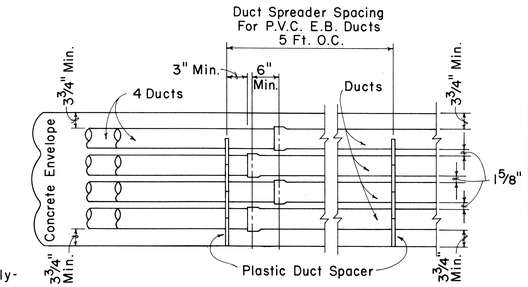

TYPICAL DUCT ENVELOPE ELEVATION ARRANGEMENT OF PLASTIC SPACERS

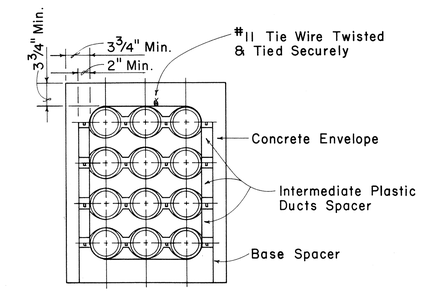

SECTION SHOWING INTER-LOCKING SPACERS

NOTE:

Before placement of concrete contractor shall seal off the crushed rock area with a plastic sheet, to prevent concrete from oozing into 1/4" holes for drainage.

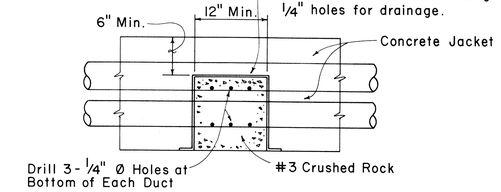

ELEVATION VIEW OF DUCT DRAIN DETAIL

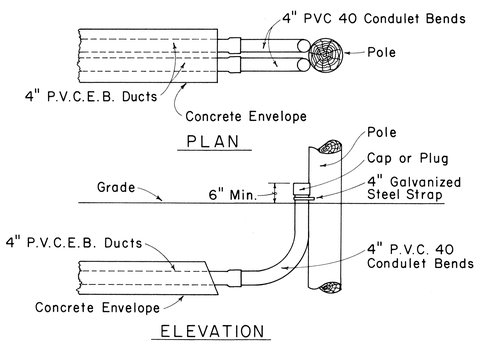

TYPICAL CONDULET BEND INSTALLATION DETAILS

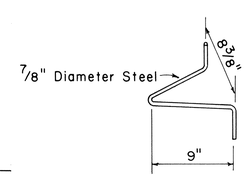

PULLING-IN IRON

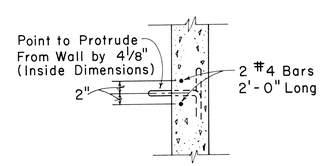

SECTIONAL VIEW OF PULLING-IN-IRON

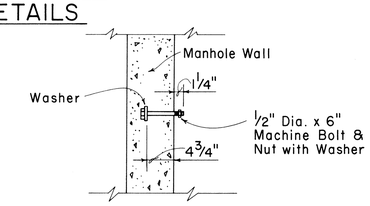

CABLE RACK STUD BOLT DETAIL

ORIGINAL PLAN	SURVEY PLOTTED BY	DATE
	DRAWN BY	
	TRACED BY	
NOTE BOOK	DESIGNED BY	
	QUANTITIES BY	
No.	CHECKED BY	

APPROVED: G. Yamada 2-12-80

Hawaiian Telephone Co., Ltd. — Date

H.T. Co., Ltd. — Drawing No. 34028

STATE OF HAWAII
DEPARTMENT OF TRANSPORTATION
LAND TRANSPORTATION FACILITIES DIVISION

STANDARD DUCT FORMATIONS

Not to Scale

SHEET No. 5 OF 8 SHEETS

FED. ROAD DIST. NO.	STATE	FED. AID PROJ. NO.	FISCAL YEAR	SHEET NO.	TOTAL SHEETS
HAWAII	HAW.	M-7600(2)	1980	148	244

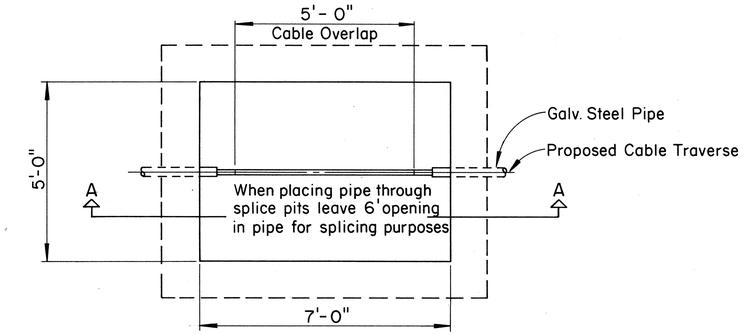

PLAN

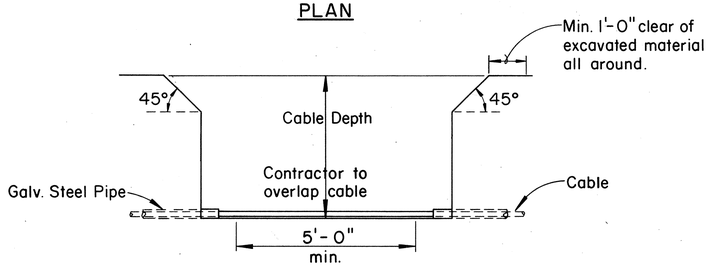

SECTION A-A

TYPICAL SPLICING PITS FOR BURIED CABLE

NOTES:
1. The Contractor shall dig pits at specified locations.
2. One face of pit shall be kept free of excavated material.
3. Where pits are located on sloping or irregular ground, the excavated material shall be placed in such a manner as to prevent surface water from draining into the pit.
4. Provide a fence around the pit at any location where stock have access to the route, and pits near farm homes to keep out small animals and pets.

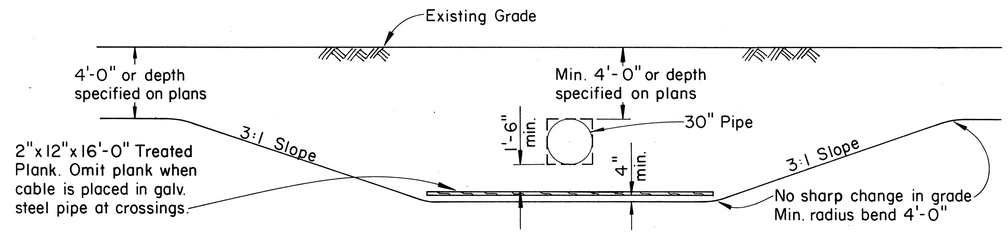

DETAIL OF CABLE CROSSING UNDER STORM CULVERTS-IRRIGATION PIPES, OTHER UTILITIES, OR FOREIGN PIPES

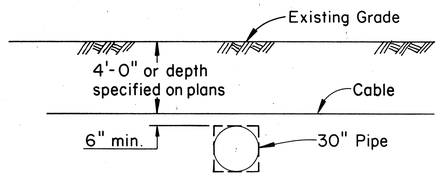

DETAIL OF CABLE CROSSING OVER STORM CULVERTS-IRRIGATION PIPES, OTHER UTILITIES, OR FOREIGN PIPES

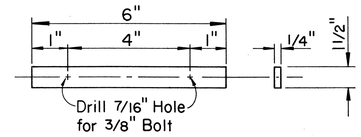

GALVANIZED STRAP DETAIL

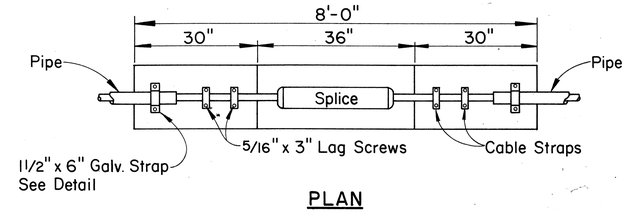

PLAN

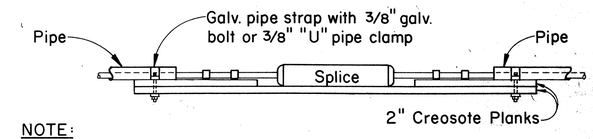

NOTE:
Galv. Strap may be substituted with pipe clamp.

ELEVATION

DETAIL OF SPLICE SUPPORT BETWEEN PIPE SECTIONS

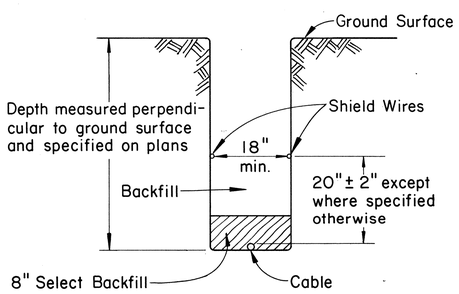

TYPICAL SECTION THROUGH NORMAL TRENCH

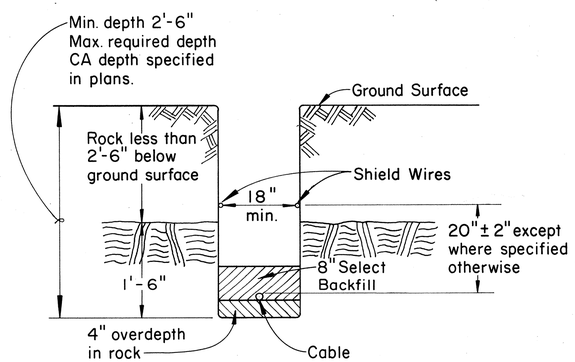

TYPICAL SECTION THROUGH TRENCH WITH ROCK LESS THAN 2'-6" BELOW SURFACE

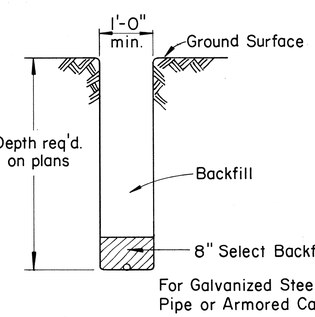

TYPICAL SECTION FOR TRENCH WHERE NO SHIELD WIRE IS REQUIRED

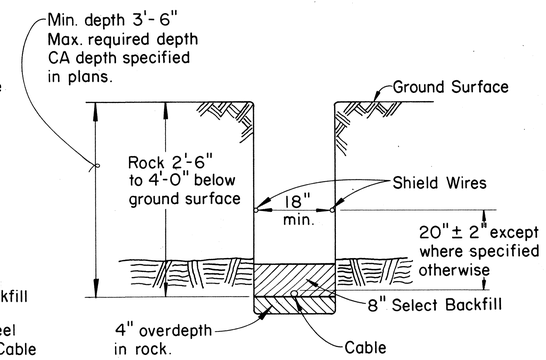

TYPICAL SECTION THROUGH TRENCH WITH ROCK 2'-6" TO 4'-0" BELOW SURFACE

APPROVED:
Hawaiian Telephone Co., Ltd. — Date 2-13-80

H.T. Co., Ltd. — Drawing Nos. 34047, 34048

STATE OF HAWAII
DEPARTMENT OF TRANSPORTATION
HIGHWAYS DIVISION

STANDARD DETAILS
SPLICING PITS AND STANDARD TRENCHING DETAILS FOR BURIED COAXIAL CABLE

Scale: Not to Scale

SHEET No. 6 OF 8 SHEETS

ORIGINAL PLAN	SURVEY PLOTTED BY	DATE
	DRAWN BY	
	TRACED BY	
NOTE BOOK	DESIGNED BY	
	QUANTITIES BY	
No.	CHECKED BY	

FED. ROAD DIST. NO.	STATE	FED. AID PROJ. NO.	FISCAL YEAR	SHEET NO.	TOTAL SHEETS
HAWAII	HAW.	M-7600(2)	1980	149	244

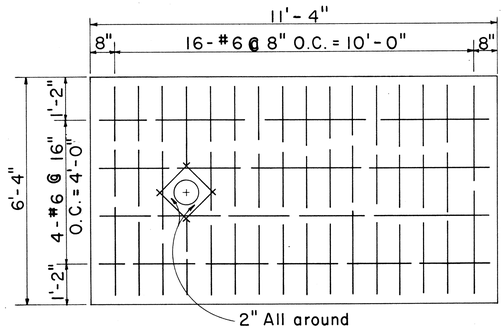

FLOOR SLAB REINF. PLAN
Scale: 1/2" = 1'-0"

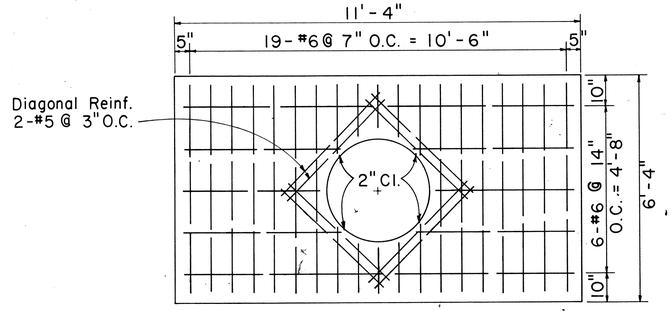

ROOF SLAB REINF. PLAN
Scale: 1/2" = 1'-0"

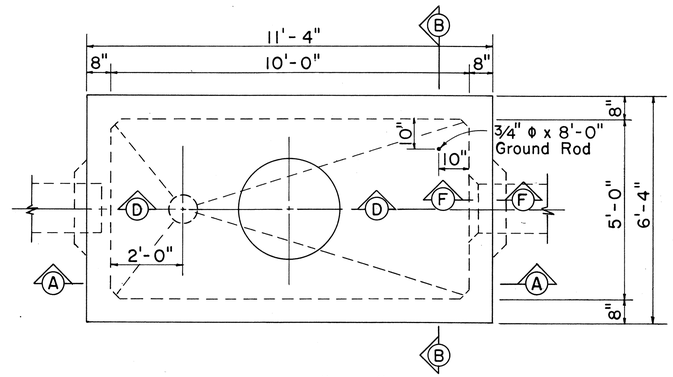

PLAN - M.H. TYPE "A-3" SERIES
FOR ROADWAY & SIDEWALK AREAS
Scale: 1/2" = 1'-0"

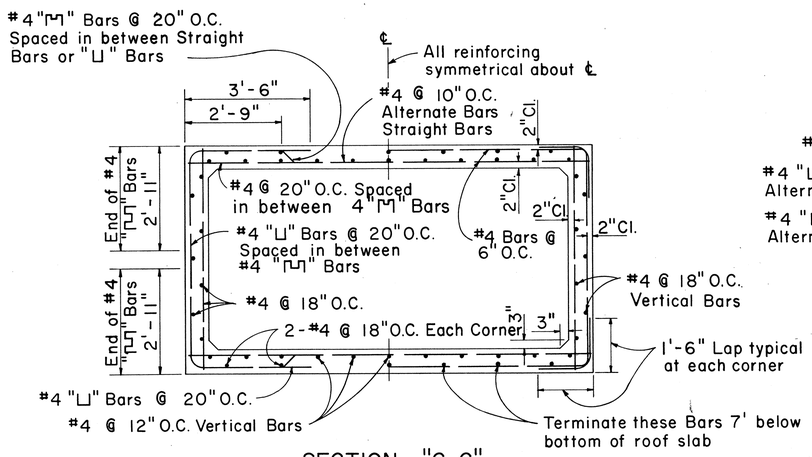

SECTION "C-C"
Scale: 1/2" = 1'-0"

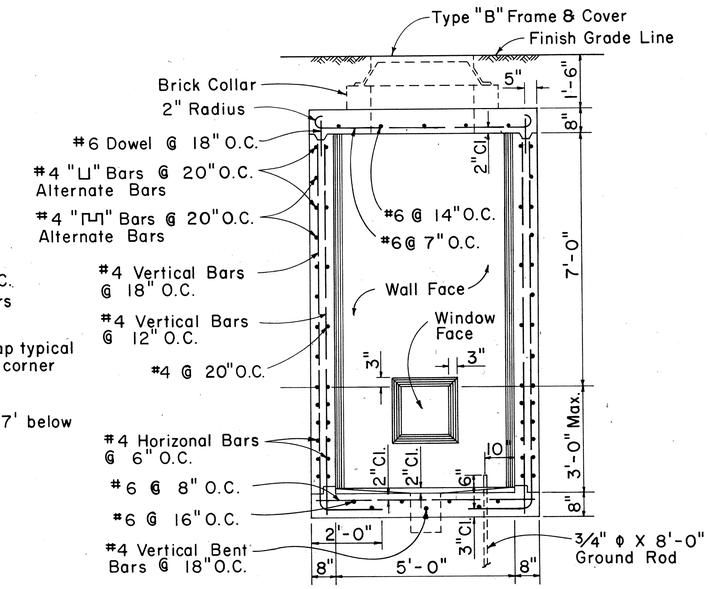

SECTION "B-B"
Scale: 1/2" = 1'-0"

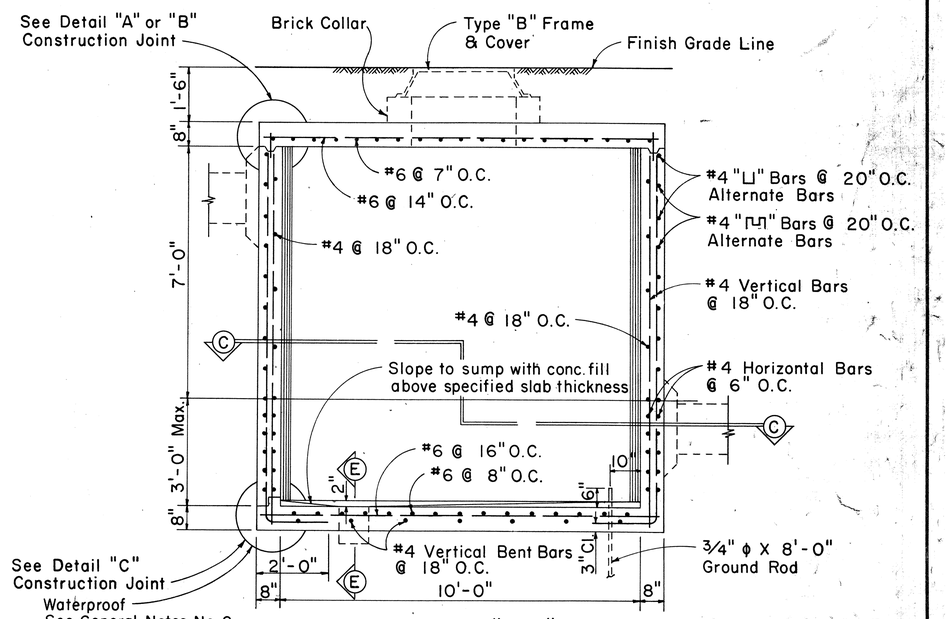

SECTION "A-A"
Scale: 1/2" = 1'-0"

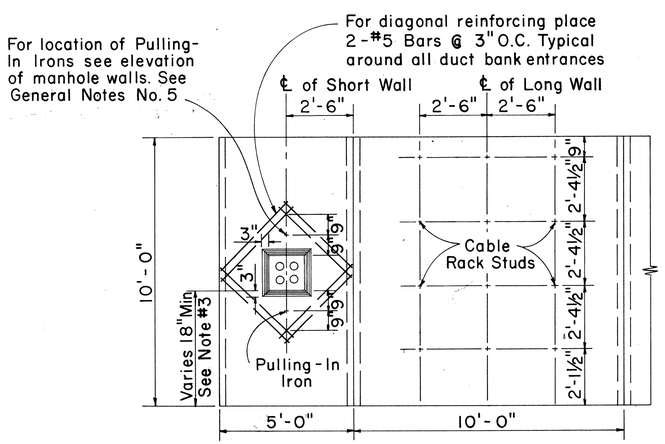

ELEVATION OF M.H. WALLS - TYPE "A-3" SERIES
(OPPOSITE FACES SIMILAR)
Scale: 3/8" = 1'-0"

GENERAL NOTES:

1. Design Data:
   fs= 20,000 psi; f'c= 3,000 psi; fc= 1,350 psi; n=10
   w= Equivalent Fluid Pressure: 30#/ft²
2. All Construction Joints shall be waterproofed with two applications of Thoro Seal or equal.
3. For Duct Window location see Plan Profile Sheets for Elevations.
4. Duct Window to suit - See Plan & Profile & Standard Detail Sheets for Location & Details.
5. For Details "A", "B", "C", Sections "D-D", "E-E", "F-F" and other miscellaneous Manhole Construction Details see Supplement Sheet to Type "A-1", "A-2" and "A-3" Telephone Manholes.
6. Step and Ladder required only in Manholes with Headroom of 9.0' or more. Step and Ladder to be furnished by H.T.CO.

Manhole Classification
Width & Length Designation "3" = 5.0' x 10.0'
Manhole Headroom

TYPE "A-3"-7.5'
8.0
8.5
9.0
9.5
10.0

APPROVED:
G. Yamada 2-12-80
Hawaiian Telephone Co., Ltd. Date

H.T. Co., Ltd. Drawing No. 34065

STATE OF HAWAII
DEPARTMENT OF TRANSPORTATION
HIGHWAYS DIVISION

TYPE "A-3" MANHOLES
FOR 7.5' TO 10.0'
HEADROOM

Scale: As Noted Date:

SHEET No. 7 OF 8 SHEETS

ORIGINAL PLAN	SURVEY PLOTTED BY	DATE
	DRAWN BY	"
	TRACED BY	"
NOTE BOOK	DESIGNED BY	"
	QUANTITIES BY	"
No.	CHECKED BY	"

FED. ROAD DIST. NO.	STATE	FED. AID PROJ. NO.	FISCAL YEAR	SHEET NO.	TOTAL SHEETS
HAWAII	HAW.	M-7600(2)	1980	150	244

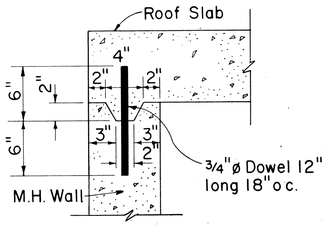

DETAIL "A"
TOP CONSTRUCTION JOINT
Scale: 1 1/2" = 1'-0"
(Optional for cast-in-place construction
Required for precast construction)

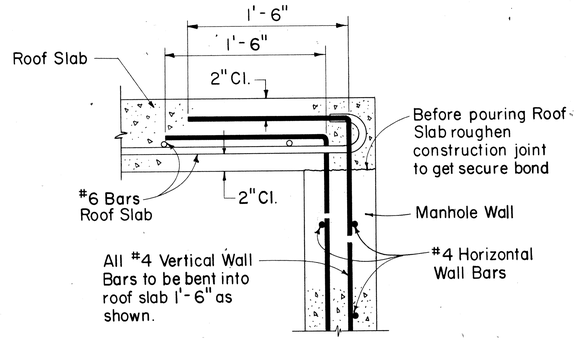

DETAIL "B"
(USED FOR CAST-IN-PLACE CONSTRUCTION)
Scale: 1 1/2" = 1'-0"

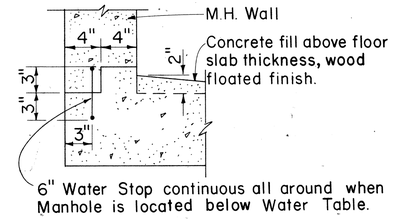

DETAIL "C"
BOTTOM CONSTRUCTION JOINT
Scale: 1 1/2" = 1'-0"

NOTE:
Corbel Bricks to suit Type A Frame & Cover.

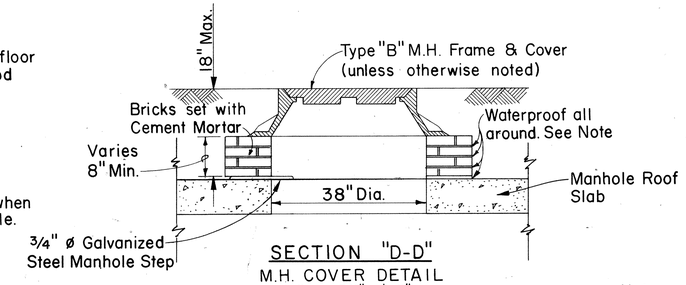

SECTION "D-D"
M.H. COVER DETAIL
Scale: 3/4" = 1'-0"

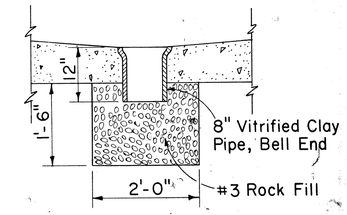

SECTION "E-E"
M.H. SUMP DETAIL
Scale: 3/4" = 1'-0"
Note:
See Section "E1-E1" Below

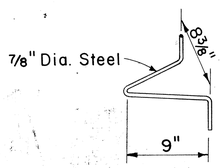

PULLING-IN IRON

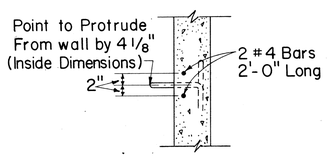

SECTIONAL VIEW OF PULLING-IN IRON
Scale: 3/4" = 1'-0"

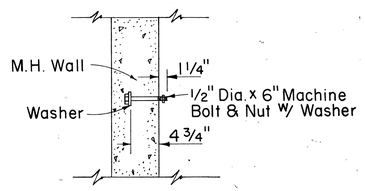

CABLE RACK STUD BOLT DETAIL
Scale: 1" = 1'-0"

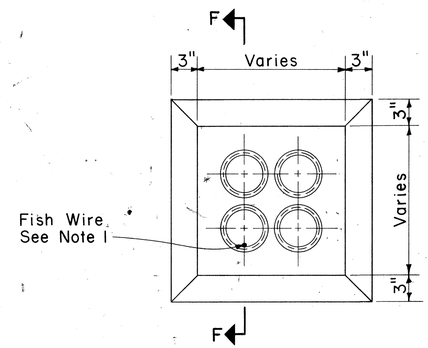

TYPICAL MANHOLE DUCT WINDOW
Scale: 1 1/2" = 1'-0"

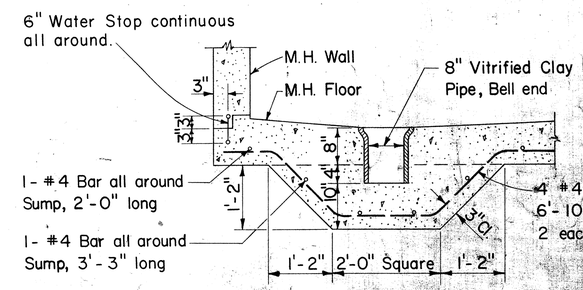

Note: Only for manholes located below water table

SECTION "E1-E1"
MANHOLE SUMP DETAIL
Scale: 3/4" = 1'-0"

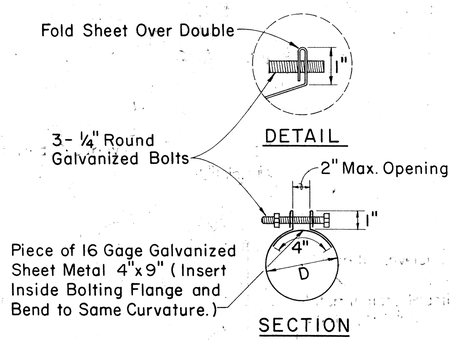

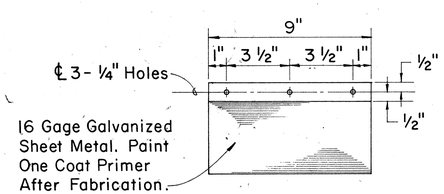

ELEVATION
3-BOLT CLAMP ADAPTOR DETAIL
Scale: 3" = 1'-0"

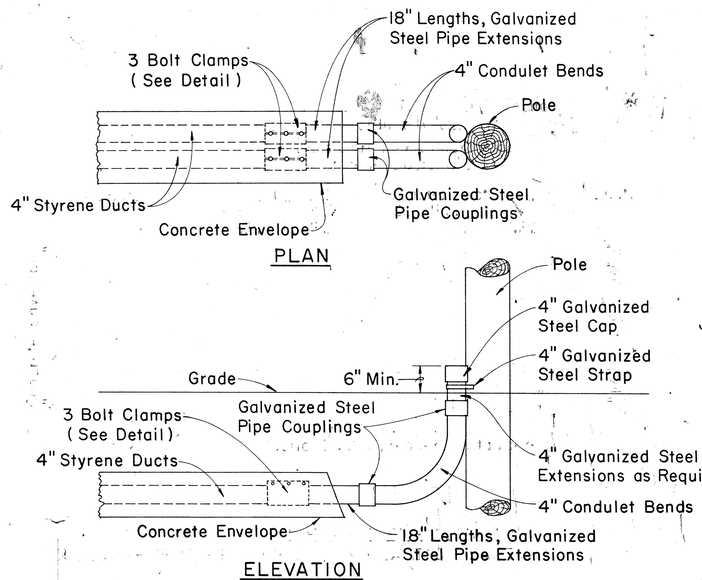

ELEVATION
TYPICAL INSTALLATION DETAILS
Scale: 3/4" = 1'-0"

NOTE

1. The Contractor shall place #12 Fish Wire in designated duct throughout its entire length with protrusions of 2 feet in manholes & handholes at each end and 1 foot in pullboxes.

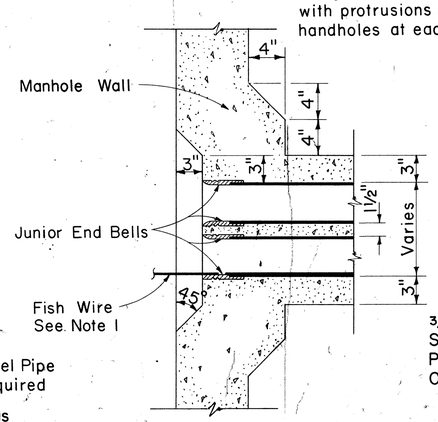

SECTION "F-F"
TYPICAL WINDOW DETAIL & JUNIOR END BELL
Scale: 1 1/2" = 1'-0"

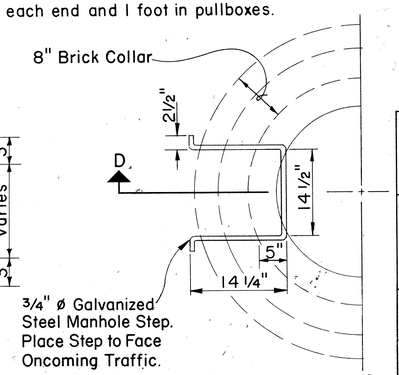

PART-PLAN
MANHOLE STEP
Scale: 1" = 1'-0"

Supplement Sheet to Type "A-1" (Drawing Nos. 34060 & 34061), Type "A-2" (Drwg. Nos. 34062 & 34063) and Type "A-3" (Drwg. Nos. 34064 & 34065) Telephone M.H.

APPROVED:

G Yamada 2-12-80
Hawaiian Telephone Co., Ltd. Date

STATE OF HAWAII
DEPARTMENT OF TRANSPORTATION
HIGHWAYS DIVISION

STANDARD DETAILS

TYPE "A" MANHOLE AND MISCELLANEOUS TELEPHONE DETAILS

Scale: As Noted Date: SEPT. 1979

SHEET No. 8 OF 8 SHEETS

ORIGINAL PLAN	SURVEY PLOTTED BY	DRAWN BY	TRACED BY	DESIGNED BY	QUANTITIES BY	CHECKED BY	DATE
NOTE BOOK							
No.							

HT

FED. ROAD DIST. NO.	STATE	FED AID PROJ. NO.	FISCAL YEAR	SHEET NO.	TOTAL SHEETS
HAWAII	HAWAII	M-7600(2)	1980	151	244

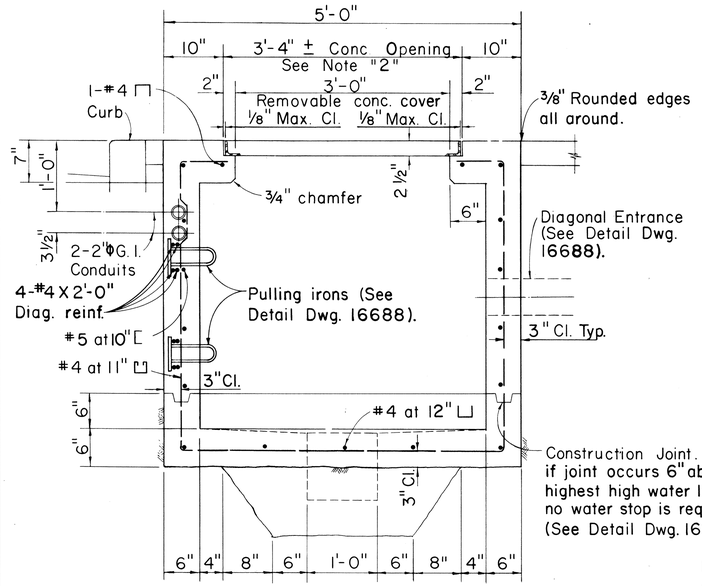

SECTION "B-B"

Scale: 1" = 1'-0"

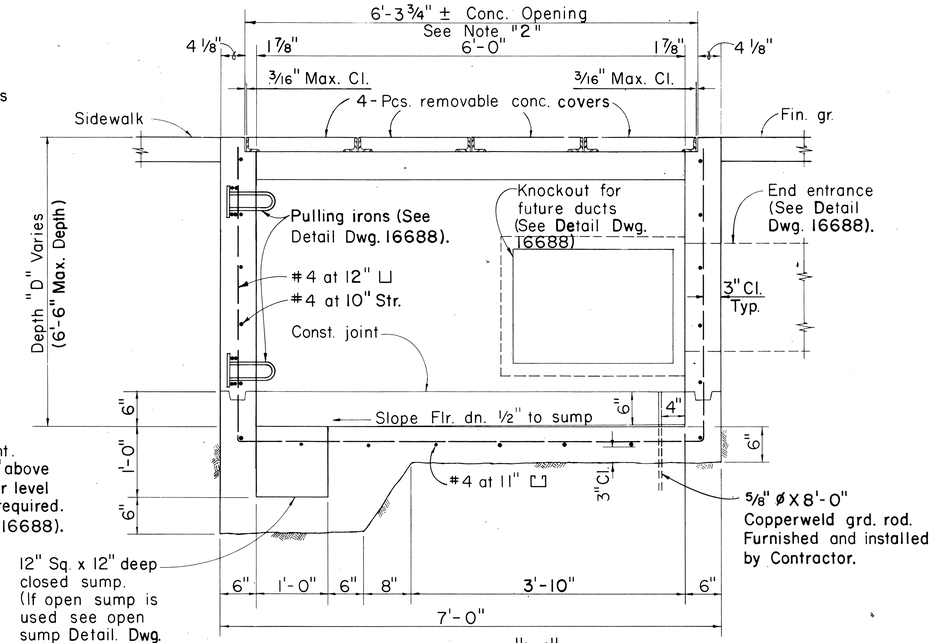

SECTION "A-A"

Scale: 1" = 1'-0"

NOTES:

1. FOR GENERAL NOTES AND MISCELLANEOUS DETAILS, REFER TO DWG. 16688 (2 SHEETS).
2. MAXIMUM CLEARANCES BETWEEN REMOVABLE CONCRETE COVERS AND CONCRETE OPENING AT THE SUPPORTS MUST BE KEPT. CONCRETE CONTRACTOR SHALL MEASURE COVER SLAB STEEL FRAME AFTER FABRICATION TO OBTAIN PROPER CLEARANCES. ANY VARIATION IN CLEARANCES SHALL BE CORRECTED TO THE SATISFACTION OF THE ENGINEER AT CONTRACTOR'S EXPENSE.
3. TWO - 2" ø G.I. COND. FOR STREET LIGHTING TO BE INSTALLED ONLY WHEN OUTSIDE FACE OF HANDHOLE IS LESS THAN 3" FROM CURBING.
4. TOP OF HANDHOLE SHALL MATCH NEW AND/OR EXISTING GRADES UNLESS OTHERWISE SHOWN OR NOTED ON PLANS OF PROJECT CONCERNED.
5. FOR DUCT ENTRANCES, DEPTH AND LOCATIONS OF PULLING IRONS, SEE HANDHOLE DEVELOPMENTS OF PROJECT CONCERNED.
6. SEE PROJECT DRAWING FOR LOCATION OF HANDHOLE CONCERNED.

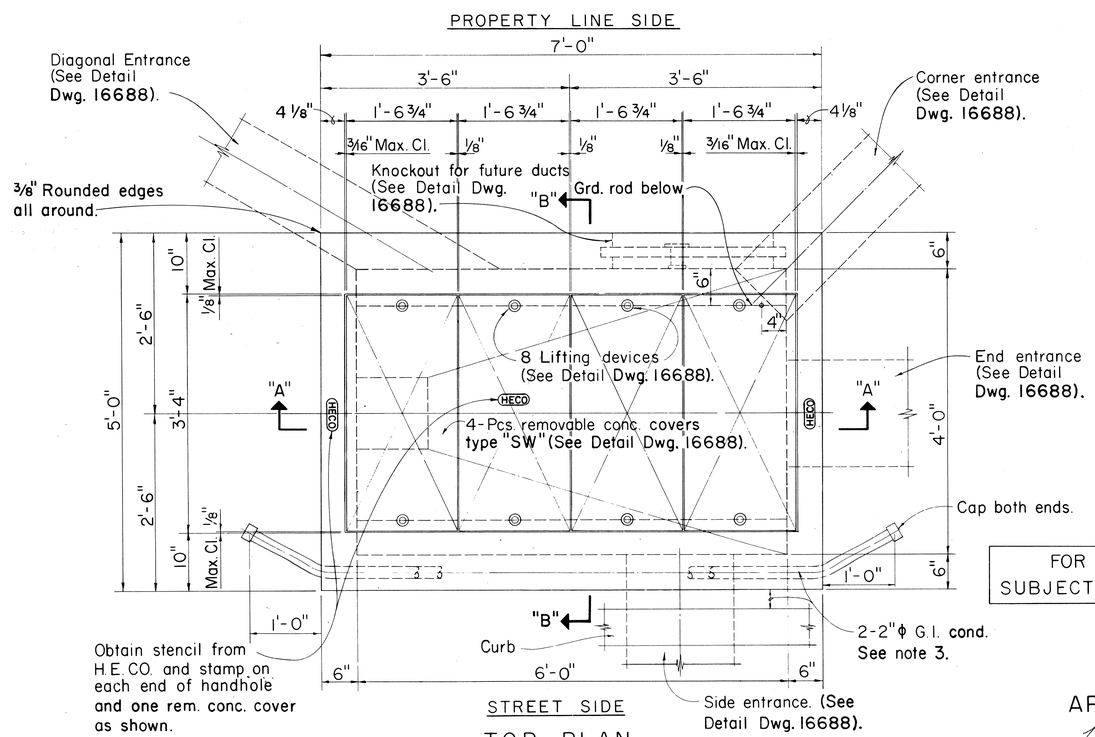

STREET SIDE

TOP PLAN

Scale: 1" = 1' - 0"

REINFORCED CONCRETE QUANTITIES

QUANTITIES OF MATERIALS FOR DEPTH "D" = 5'-0",

Total concrete	=	3.0 Cu. Yds.
Total reinf. steel	=	427 Lbs.
Total misc. steel	=	160 Lbs.

WEIGHT PER REMOVABLE CONCRETE COVER

Concrete	=	150 Lbs.
Reinf. steel	=	7 Lbs.
Misc. steel	=	42 Lbs.
TOTAL		199 Lbs.

MATERIALS FOR 6" DEPTH OF 6" THICK WALL,

Concrete	=	0.2 Cu. Yds.
Reinf. steel	=	25 Lbs.

FOR USE IN AREAS NOT SUBJECT TO VEHICULAR TRAFFIC

APPROVED:

W K Yoshioka 2-22-80

HAWAIIAN ELECTRIC CO., INC. DATE

DD-630.015 SHEET No. 1 OF 6 SHEETS

HECo., Inc. Drawing Number

18842 SHEET No. 1 OF 1 SHEET

STATE OF HAWAII
DEPARTMENT OF TRANSPORTATION
HIGHWAYS DIVISION

STANDARD DETAILS

HANDHOLE TYPE
46 (4'-0" x 6'-0")
UNDERGROUND STANDARDS

Scale: As Shown

ORIGINAL PLAN | SURVEY PLOTTED BY | DRAWN BY | TRACED BY | DESIGNED BY | QUANTITIES BY | CHECKED BY | DATE | NOTE BOOK | No.

FED. ROAD DIST. NO.	STATE	FED. AID PROJ. NO.	FISCAL YEAR	SHEET NO.	TOTAL SHEETS
HAWAII	HAW.	M-7600(2)	1980	152	244

GENERAL NOTES FOR MANHOLES & HANDHOLES STANDARD DETAILS

1. All work shall be subject to inspection by the Hawaiian Electric Co., Inc., Contracting & Inspection Division, City & County of Honolulu and/or Land Transportation Facilities Division, State of Hawaii, whichever Government has authority over the work.
2. Contractor shall notify the Hawaiian Electric Co., Inc., Contracting & Inspection Division, phone 548-4427 or 548-4428 24 hours before proceeding with any work on facilities owned by Hawaiian Electric Co., Inc..
3. Ducts: For number; size and exact location of Duct Entrances, refer to Project Drawings.
4. Pulling Irons: For number and locations, refer to Project Drawings.

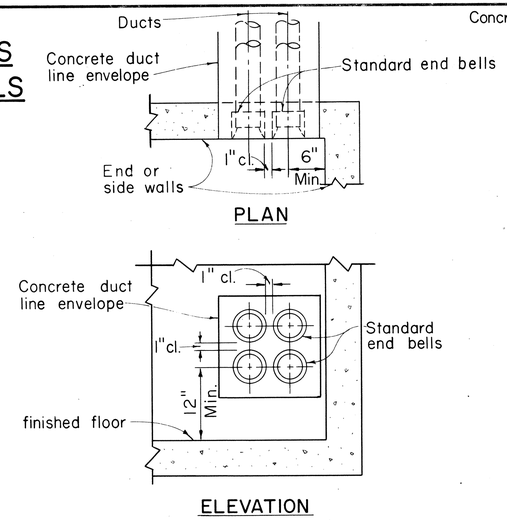

END OR SIDE ENTRANCE

Scale: 1" = 1'-0"

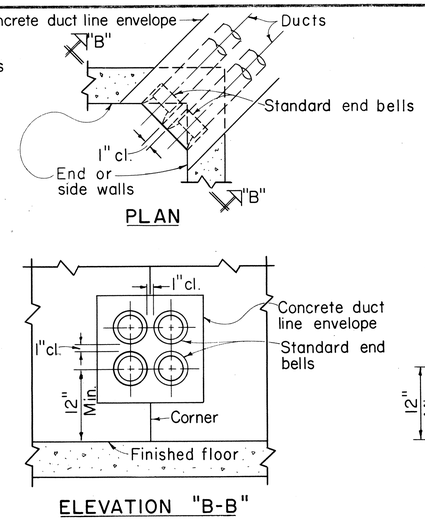

CORNER ENTRANCE

Scale: 1" = 1'-0"

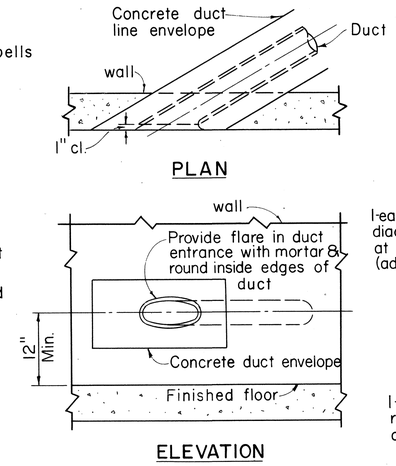

DIAGONAL ENTRANCE

Scale: 1" = 1'-0"

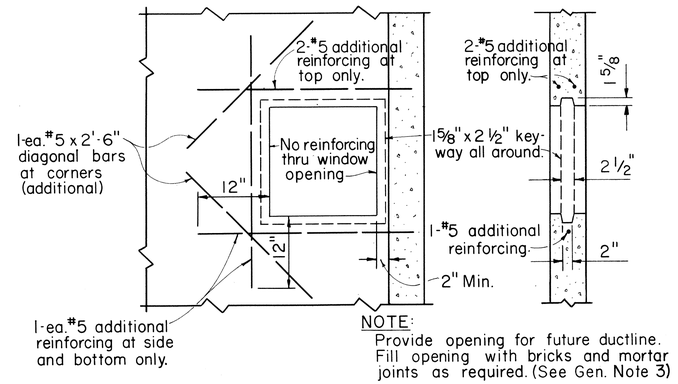

KNOCKOUT FOR FUTURE DUCT LINE

Scale: 1" = 1'-0"

NOTES:
1. Hot-dip galvanized after fabrication.
2. For additional reinf. see Proj Dwg.

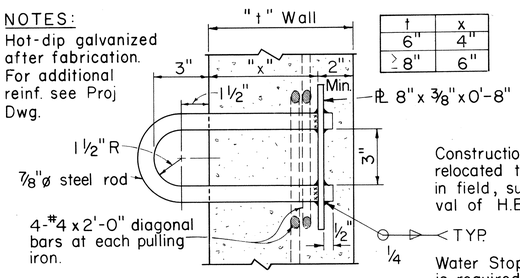

t	x
6"	4"
≥ 8"	6"

PULLING IRON FOR 6" & 8" WALL

Scale: 3" = 1'-0"

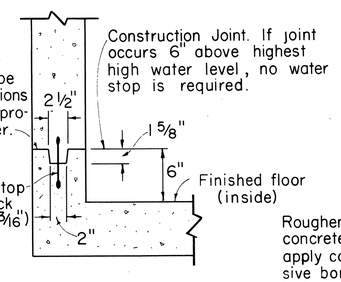

TYPICAL CONSTRUCTION JOINT

Scale: 1 1/2" = 1'-0"

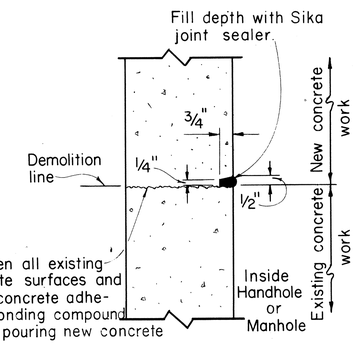

TYPICAL COLD JOINT

Scale: 3" = 1'-0"

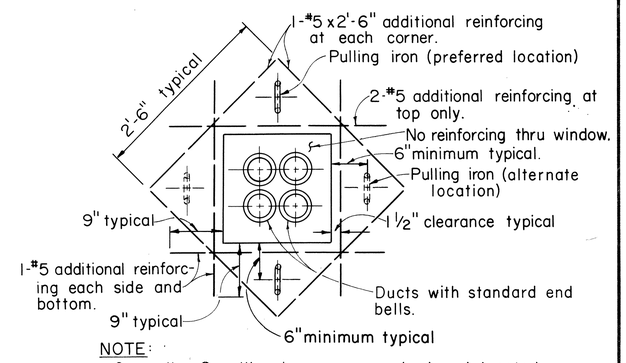

TYPICAL DUCT WINDOW

Scale: 1" = 1'-0"

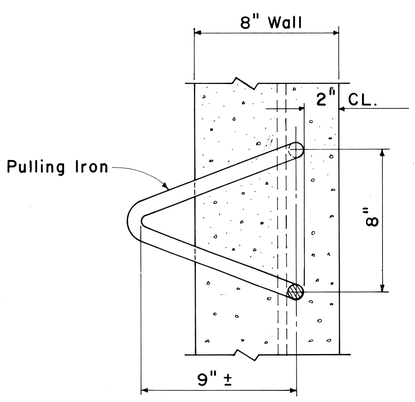

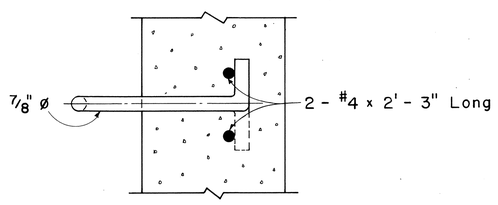

PULLING IRON FOR 8" WALL

Scale: 3" = 1'-0"

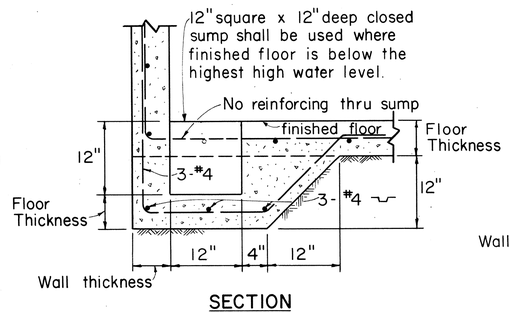

CLOSED SUMP

Scale: 1" = 1'-0"

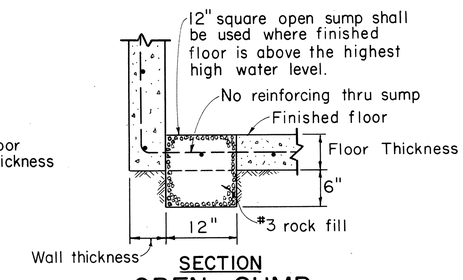

OPEN SUMP

Scale: 1" = 1'-0"

ORIGINAL PLAN	SURVEY PLOTTED BY	DATE
	DRAWN BY	"
	TRACED BY	"
NOTE BOOK	DESIGNED BY	"
No.	QUANTITIES BY	"
	CHECKED BY	"

DD-630.009

HECo., Inc. Drawing Number

16688

SHEET NO. 1 OF 2 SHEETS

STATE OF HAWAII
DEPARTMENT OF TRANSPORTATION
HIGHWAYS DIVISION

MISCELLANEOUS DETAILS
HANDHOLES & MANHOLES
UNDERGROUND STANDARDS

APPROVED:

Hawaiian Electric Co., Inc. — Date 2-22-80

Scale as noted

SHEET No. 2 OF 6 SHEETS

FED. ROAD DIST. NO.	STATE	FED. AID PROJ. NO.	FISCAL YEAR	SHEET NO.	TOTAL SHEETS
HAWAII	HAW.	M-7600(2)	1980	153	244

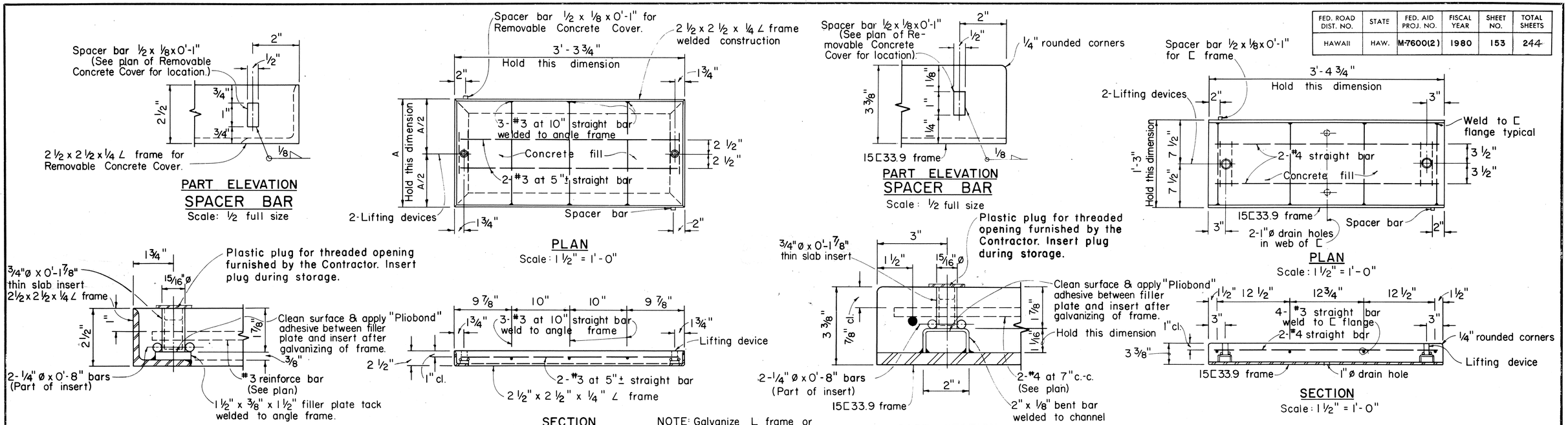

NOTE: Galvanize L frame or [frame, steel rods, and spacer bars after fabrication.

TYPE	DIMENSIONS	
	A	A/2
"SW"	1'-6 3/4"	9 3/8"
"SWI"	1'-2 13/16"	7 13/32"

TYPE "SW" & "SWI" REMOVABLE CONCRETE COVER

TYPE "TR" REMOVABLE CONCRETE COVER

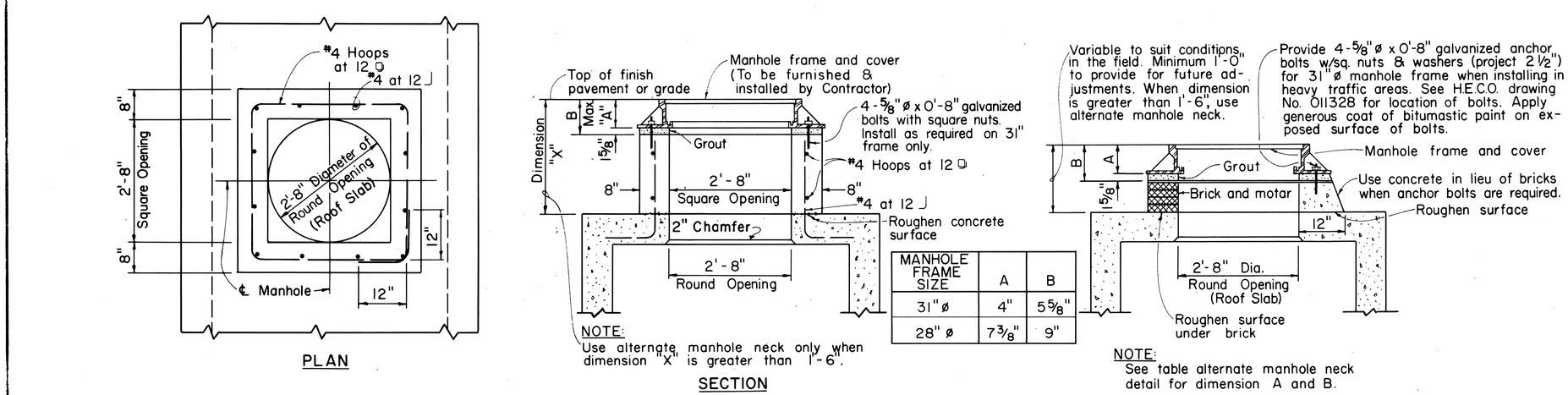

MANHOLE FRAME SIZE	A	B
31"ø	4"	5 5/8"
28"ø	7 3/8"	9"

ALTERNATE MANHOLE NECK

Scale: 3/4" = 1'-0"

31"ø & 28"ø MANHOLE FRAME NECK DETAIL

Scale: 3/4" = 1'-0"

APPROVED:

Hawaiian Electric Co., Inc. — 2-22-80 Date

DD-630.010

HECo., Inc. Drawing Number 16688

SHEET NO. 2 OF 2 SHEETS

STATE OF HAWAII
DEPARTMENT OF TRANSPORTATION
HIGHWAYS DIVISION

MISCELLANEOUS DETAILS
HANDHOLES & MANHOLES
UNDERGROUND STANDARDS

Scale as noted

SHEET No. 3 OF 6 SHEETS

ORIGINAL PLAN | SURVEY PLOTTED BY | DRAWN BY | TRACED BY | DESIGNED BY | QUANTITIES BY | CHECKED BY | NOTE BOOK | No. | DATE

FED. ROAD DIST. NO.	STATE	FED. AID PROJ. NO.	FISCAL YEAR	SHEET NO.	TOTAL SHEETS
HAWAII	HAW.	M-7600(2)	1980	154	244

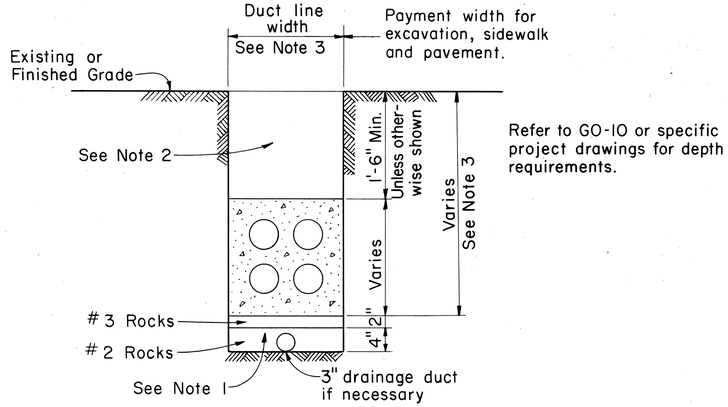

NOTES:

1. If drainage is necessary, install 6" rockfill as shown. In extremely watery areas, install 3" drainage duct.
2. Refer to H.E.Co. Specification CS7001-0 (or equivalent) for backfill material requirements.
3. Size of concrete envelope and depth of excavation to be determined by specific project.

EB EXCAVATION AND BACKFILL DETAILS

(TYPICAL)

Scale: 1" = 1'-0"

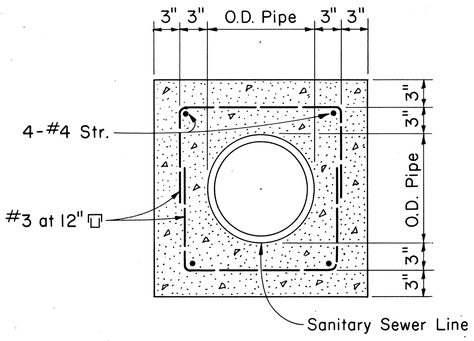

CROSS-SECTION OF SEWER LINE

NOTE:

Where duct line crosses sewer line, cover sewer line with concrete jacket as indicated in specification.

DUCT LINE WIDTH	LENGTH OF SEWER LINE TO BE COVERED
24" or less	5'
Greater than 24"	(Width of duct line) + (5')

SANITARY SEWER LINE CROSSING DETAIL

Scale: 1 1/2" = 1'-0"

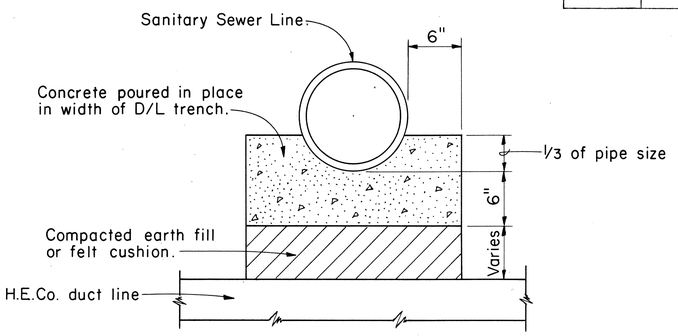

CONCRETE CRADLE FOR SANITARY SEWER LINE CROSSING

Scale: 1 1/2" = 1'-0"

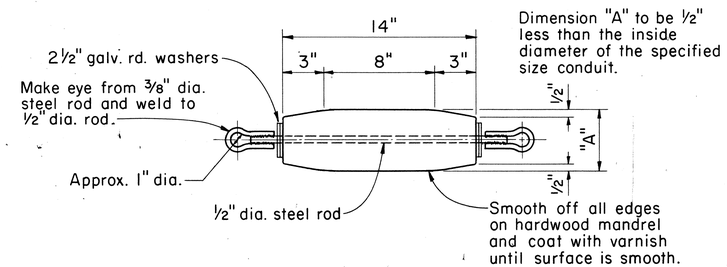

MANDREL DETAIL

Not To Scale

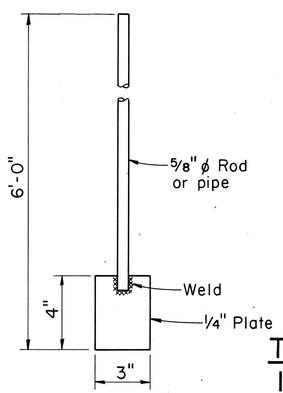

HAND SPADE

Scale: 3" = 1'-0"

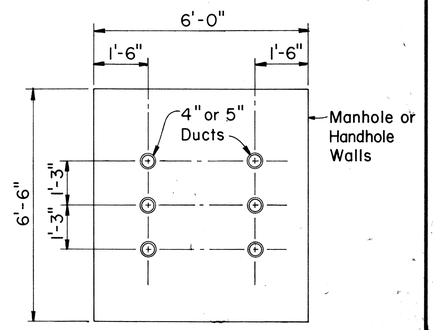

TYPE "B" TYPICAL CONDUIT ENTRANCE INTO HANDHOLE, MANHOLE WALLS

(6 WAY DUCT LINE SHOWN)

Scale: 1/2" = 1'-0"

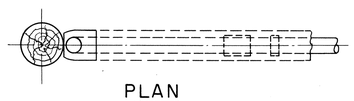

PLAN

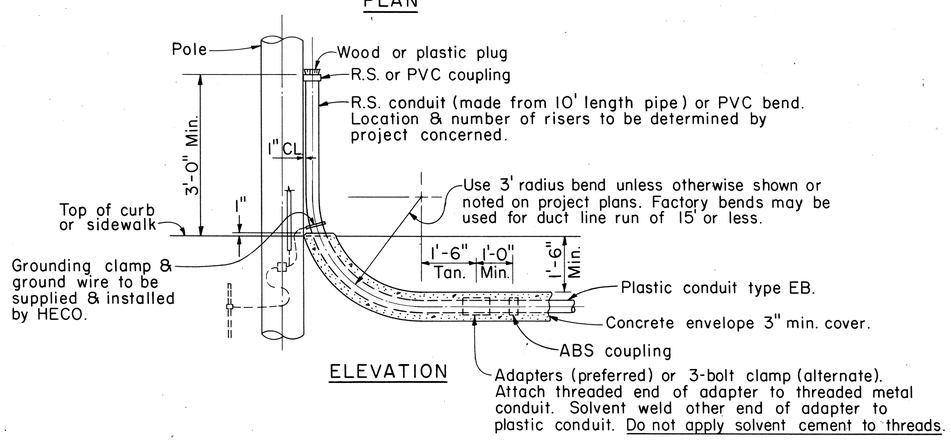

ELEVATION

TYPICAL RISER DETAIL

(POLE RISER SHOWN)

Scale: 1/2" = 1'-0"

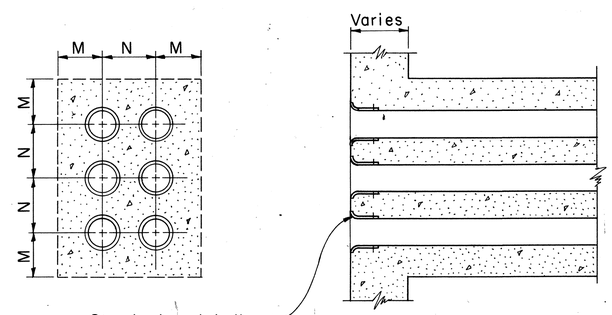

TYPE "A" TYPICAL CONDUIT ENTRANCE INTO HANDHOLE, MANHOLE OR VAULT WALLS

(6 WAY DUCT LINE SHOWN)

Scale: 1 1/2" = 1'-0"

DUCT SIZE	DIMENSIONS (INCHES) M	N
2	4	5
3	5	6
4	5 1/2	7
5	6	8
6	6 5/16	9

APPROVED:

Hawaiian Electric Co., Inc. — Date: 2-22-80

HECo., Inc. Drawing Number

30-1030

STATE OF HAWAII
DEPARTMENT OF TRANSPORTATION
HIGHWAYS DIVISION

TYPICAL DUCT CONSTRUCTION INSTALLATION DETAILS UNDERGROUND DETAILS

Scale as noted

DD-630.002

SHEET No. 4 OF 6 SHEETS

ORIGINAL PLAN		DATE
	SURVEY PLOTTED BY	
	DRAWN BY	"
	TRACED BY	"
	DESIGNED BY	"
NOTE BOOK	QUANTITIES BY	"
No.	CHECKED BY	"

K+E IMPERIAL TRACING CLOTH LA 3207

154

HE-37

FED. ROAD DIST. NO.	STATE	FED. AID PROJ. NO.	FISCAL YEAR	SHEET NO.	TOTAL SHEETS
HAWAII	HAW.	M-7600(2)	1980	155	244

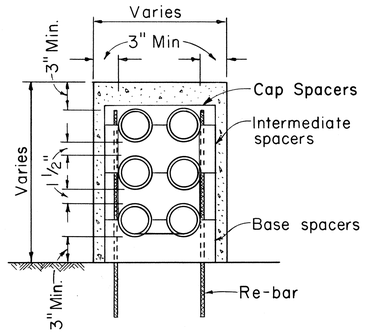

SECTION "A-A"

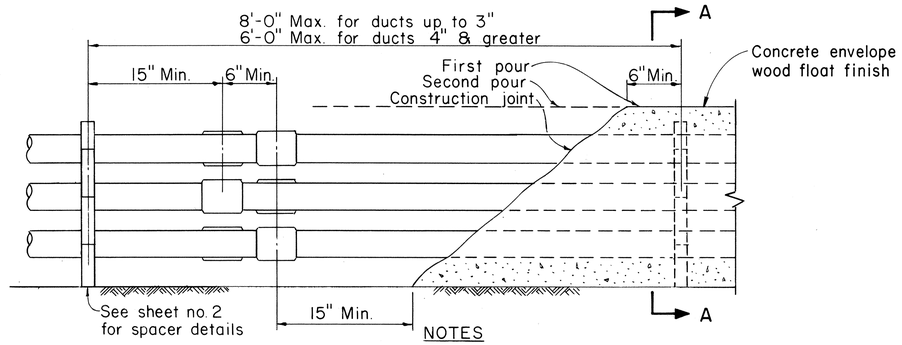

ELEVATION

TYPICAL DUCT LINE

(6-WAY DUCT SHOWN)

Scale: 1½" = 1'-0"

NOTES

1. Stagger couplings (or belled ends).
2. Anchor conduit with #14 steel tie wire & #4 reinforcing bars.
3. Cement all joints.
4. Avoid standing on conduit.

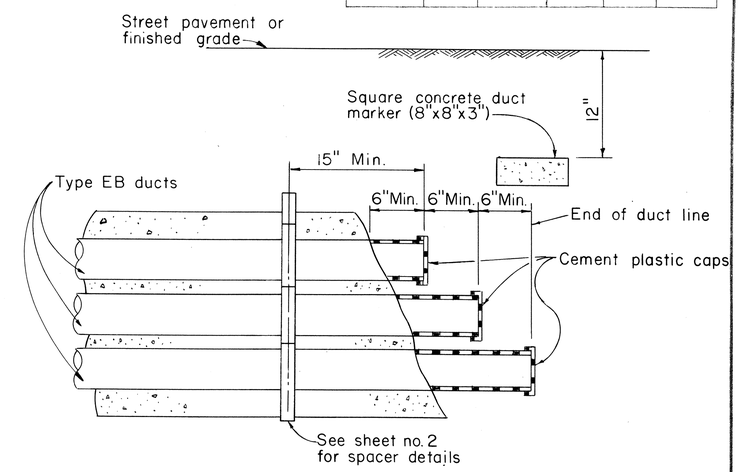

TYPICAL STUB OUT DETAIL

(6-WAY DUCT SHOWN)

Scale: 1½" = 1'-0"

Refer to GO-10 or specific project drawings for depth requirements.

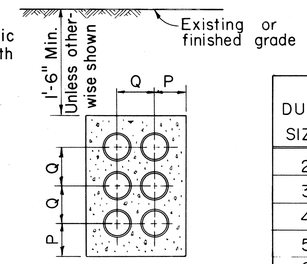

DUCT SIZE	DIMENSIONS (INCHES) P	Q
2	4 1/4	4 1/8
3	4 3/4	5 1/8
4	5 1/4	6 1/4
5	5 7/8	7 5/8
6	6 5/16	8 5/8

NOTE:

1. Maintain 1½" minimum spacing between ducts; 3" minimum concrete envelope around top, bottom & sides.
2. Dimensions are minimum dimensions.

EB TYPICAL DUCT SECTION

(6-WAY DUCT SHOWN)

Scale: 1" = 1'-0"

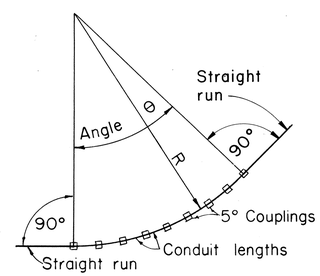

TABLE "A"	
APPROX. RADIUS OF BEND, R	LENGTH OF EA. CONDUIT-FT USING 5° BEND AT COUPL.
11'-6"	1
17'-3"	1.5
23'-0"	2
28'-9"	2.5
34'-6"	3
40'-3"	3.5
46'-0"	4
51'-9"	4.5
57'-6"	5
69'-0"	6
80'-6"	7
92'-0"	8

TABLE "B"		
ANGLE OF BEND θ	NO. OF COUPLINGS	LENGTH OF CONDUIT
15°	3	2
30°	6	5
45°	9	8
60°	12	11
75°	15	14
90°	18	17

EXAMPLE:

Radius of bend (R) = 60'
Angle of bend (θ) = 45°

From Table A, the nearest value to 60' radius is 57'-6". Length of conduit = 5'.

From Table B, for 45° angle.
Number of couplings required = 9
Number of conduit lengths required = 8

METHOD OF FORMING CURVES:

There are 4 methods of forming curves with plastic conduit.

1. "Cold" bending: Limit trench formed radius sweeps to 25' minimum radius.
2. "Heat" bending: Do not heat bend conduit.
3. 5° angle couplings may be used as shown.
4. Factory made elbows and sweeps may be used only when specified by Engineer.

APPLICATION OF 5° COUPLING FOR LONG RADIUS BENDS

GENERAL NOTES

HECO PURCHASE SPECIFICATION NO.

A. APPROVED CONDUIT MATERIALS
   1. Encased Burial (EB) Conduit
      ~~a) Asbetos Cement, Type I ~~ ~~M7005~~
      b) ABS (Acrylonitrile-Butadiene-Styrene) Plastic Conduit, Type EB ____ M7001
      c) PVC (Polyvinyl Chloride) Plastic Conduit, Type EB ____ M7001
      d) PVC Plastic Conduit, Schedule 40 ____ 116
      See note 3 **Typical Duct Line**
   2. Direct Burial (DB) Conduit
      a) ABS Plastic Conduit, Type DB ____ M7001
      b) PVC Plastic Conduit ____ M7001
      c) PVC Plastic Conduit, Schedule 40 ____ 116
B. This drawing provides details for installing Plastic Ducts (ABS & PVC) only. Refer to drawing 30-1030 ~~& 30-1033~~ for installing ~~Asbestos Cement Ducts~~ Encased Burial.

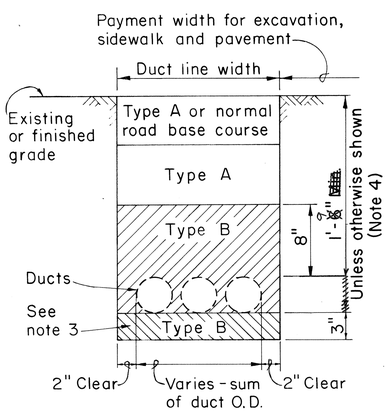

D.B. EXCAVATION & BACKFILL DETAILS (TYPICAL)

Scale 1½" = 1'-0"

NOTES:

1. Type A: Beach sand, earth or earth and gravel. If earth and gravel, the max. rock size shall be 1" and the mixture shall contain not more than 50%, by volume, of rock particles.
2. Type B: Beach sand, earth or earth and gravel. If earth and gravel, the mixture must pass a ½" mesh screen and contain not more than 20%, by volume, of rock particles.
3. When trench bottom is coarser than Type B material, provide 3" duct cushion.
4. **Refer to GO-10 or specific project drawings for depth requirements.**

REFERENCE SPECIFICATION

CS 7202	General Conditions
CS 7001	Construction of U.G. Facilities
CS 7003	Construction of Electrical Facilities

APPROVED:

[illegible] 2-22-80
Hawaiian Electric Co., Inc. Date

DD-630.005

HECo., Inc. Drawing Number

30-1035 SHEET No. 1 OF 2 SHEETS

STATE OF HAWAII
DEPARTMENT OF TRANSPORTATION
HIGHWAYS DIVISION

STANDARD DETAILS

PLASTIC DUCTS
INSTALLATION DETAILS
UNDERGROUND STRUCTURES

Scale as noted

SHEET No. 5 OF 6 SHEETS

ORIGINAL PLAN | SURVEY PLOTTED BY | DRAWN BY | TRACED BY | DESIGNED BY | QUANTITIES BY | CHECKED BY | DATE | NOTE BOOK | No.

FED. ROAD DIST. NO.	STATE	FED. AID PROJ. NO.	FISCAL YEAR	SHEET NO.	TOTAL SHEETS
HAWAII	HAW.	M-7600(2)	1980	156	244

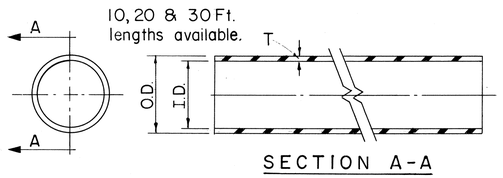

CONDUIT

CONDUIT SIZE	EB (ENCASED BURIAL) HECO CODE	O.D.	I.D.	T (MIN.)	WEIGHT #/10² FT.	DB (DIRECT BURIAL) HECO CODE	O.D.	I.D.	T (MIN.)	WEIGHT #/10² FT.
2		2.375	2.25	.060	21	29010	2.375	2.15	.110	38
3		3.500	3.35	.075	39	29012	3.500	3.25	.125	64
4		4.500	4.31	.095	63	29014	4.500	4.18	.160	104
5		5.563	5.36	.100	82	29016	5.563	5.20	.180	146
6		6.625	6.375	.125	121		6.625	6.25	.190	182

NOTE: Type EB & DB Conduits have same O.D. for a given size. All fittings which go over Conduits are DB type & fit both types of Conduits.

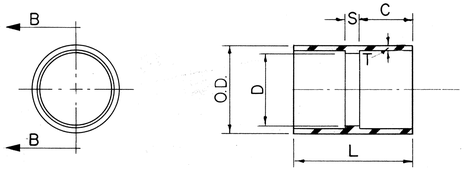

SIZE	HECO CODE	O.D.	D	L	C	S	T
2		2.620	2.255	2 7/16	1.16	.110	.110
3		3.780	3.350	3 3/8	1.63	.120	.125
4		4.855	4.310	3 11/16	1.78	.120	.160
5		5.965	5.363	4 3/32	1.97	.160	.180
6		7.050	6.375	4 15/32	2.16	.160	.190

COUPLING (ASTM D-2750)

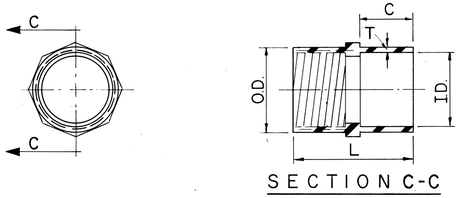

SIZE	HECO CODE	O.D.	I.D.	L	T	C
2				2 15/16	1 1/16	1.16
3				3 7/16	1 5/8	1.63
4				3 11/16	1 23/32	1.78
5				4 1/16	1 27/32	1.97
6				15 5/8	1 11/16	3.44

ADAPTER - PLASTIC TO STEEL

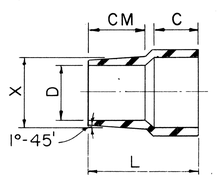

SIZE	HECO CODE	L	X	C.M.	D	C
2		3 1/16	2.580	1 3/4	2.18	1.16
3		3 19/32	3.620	1 3/4	3.09	1.63
4		4 1/32	4.620	2	4.03	1.78
5						

ADAPTER - PLASTIC TO ASBESTOS CEMENT

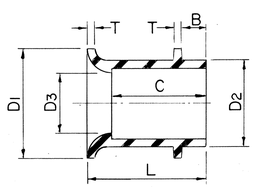

SIZE	HECO CODE	D1	D2	D3	B	C	L	T
2		3.01	2.520	2.255	.50	1.16	1.54	.060
3		4.10	3.680	3.350	.75	1.63	2.00	.075
4		5.31	4.725	4.310	.75	1.78	2.28	.095
5		6.36	5.805	5.363	1.00	1.97	2.47	.100
6		7.38	6.920	6.375	1.00	2.16	2.66	.125

END BELL (ASTM D-2750)

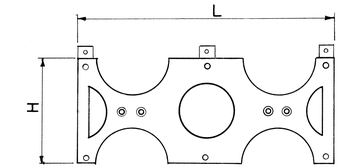

SIZE	HECO CODE	L	H	W
2		9.50	3.94	
3		11.25	5.06	
4		13.75	6.06	
5		15.97	7.06	
6		18.0	8.19	

INTERMEDIATE SPACER

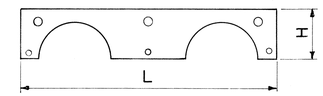

SIZE	HECO CODE	L	H
2		9.50	1.75
3		11.25	2.25
4		13.75	3.13
5		15.87	3.63
6		18.0	4.25

CAP SPACER

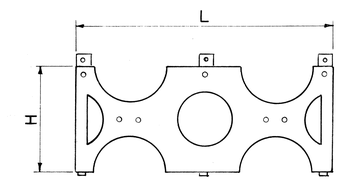

SIZE	HECO CODE	L	H
2		9.50	4.25
3		11.25	4.75
4		13.75	5.25
5		15.87	5.87
6		18.0	6.375

BASE SPACER

DUCT SPACER COMPONENTS
(FORMEX SPACER OR EQUIVALENT)

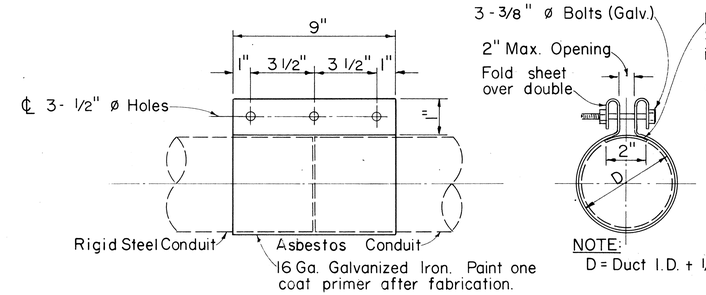

SIZE	HECO CODE
2	13126
3	13128
4	13130
5	13132
6	

3 - BOLT CLAMP

GENERAL NOTES:
1. All dimensions in inches.
2. Spacers shown are different than that used for Asbestos Cement Type.
3. These accessories are to be used with ABS (Acrylonitrile-Butadiene - Styrene), or PVC (Poly-Vinyl Chloride) Plastic Conduit, per HECO purchase specification M7001-0.

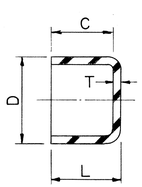

SIZE	HECO CODE	D	C	L	T
2		2.52	.59	.65	.060
3		3.68	.81	.89	.075
4		4.725	.91	1.01	.095
5		5.805	1.00	1.10	.100
6		6.920	1.13	1.25	.125

CAP (RIGID) - FOR SEMI-PERMANENT USE (ASTM D-2750)

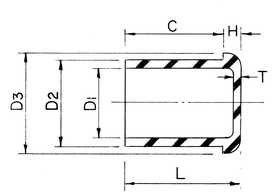

SIZE	HECO CODE	D1	D2	D3	C	H	L	T
2		2.260	2.375	2.500	.593	.125	.718	.060
3		3.360	3.500	3.656	.812	.156	.968	.075
4		4.320	4.500	4.687	.906	.187	1.092	.095
5		5.375	5.638	5.760	1.000	.218	1.218	.100
6		6.390	6.625	6.875	1.093	.250	1.343	.125

CAP (TEMPORARY) (ASTM D-2750)

NOTE: Cap will go over conduit or "plug" the coupling.

APPROVED:
m? [illegible] 2-22-80
Hawaiian Electric Co., Inc. Date

DD-630.006
HECo., Inc. Drawing Number
30-1035
SHEET NO. 2 OF 2 SHEETS

STATE OF HAWAII
DEPARTMENT OF TRANSPORTATION
HIGHWAYS DIVISION

STANDARD DETAILS
PLASTIC DUCTS
INSTALLATION DETAILS
UNDERGROUND STRUCTURES

Scales: Not to Scale

SHEET No. 6 OF 6 SHEETS

ORIGINAL PLAN | SURVEY PLOTTED BY | DRAWN BY | TRACED BY | DESIGNED BY | QUANTITIES BY | CHECKED BY | DATE
NOTE BOOK No.