FED. ROAD DIST. NO.	STATE	FED. AID PROJ. NO.	FISCAL YEAR	SHEET NO.	TOTAL SHEETS
HAWAII	HAW.	M-7600(2)	1980	168	244

GENERAL NOTES

1. GENERAL SPECIFICATIONS: HAWAII DEPARTMENT OF TRANSPORTATION, STANDARD SPECIFICATIONS FOR ROAD AND BRIDGE CONSTRUCTION, 1976, TOGETHER WITH SPECIAL PROVISIONS PREPARED FOR THIS CONTRACT.
2. DESIGN SPECIFICATIONS: THE LATEST EDITION OF A.A.S.H.T.O. STANDARD SPECIFICATIONS FOR HIGHWAY BRIDGES.
3. LOADS:
   (A) DEAD LOAD: AN ALLOWANCE OF 18 P.S.F. FOR FUTURE WEARING SURFACE OF ASPHALT CONCRETE HAS BEEN PROVIDED FOR IN THE DESIGN.
   (B) LIVE LOAD: HS20-44 OR INTERSTATE LOADING.
4. MATERIALS:
   (A) ALL CONCRETE SHALL BE CLASS A UNLESS OTHERWISE NOTED.
   (B) ALL REINFORCING STEEL SHALL BE A.S.T.M. A615, GRADE 40 UNLESS OTHERWISE NOTED.
   (C) ALL STRUCTURAL STEEL SHALL BE A.S.T.M. A-36 HOT DIP GALVANIZED, UNLESS OTHERWISE NOTED.
   (D) ALL ANCHOR BOLTS WASHERS AND NUTS FOR BRIDGE BEARINGS SHALL BE A.S.T.M. A325, HOT DIP GALVANIZED, UNLESS OTHERWISE SPECIFIED.
   (E) FOR MATERIALS OF PRESTRESSED CONCRETE BEAM SEE PRESTRESSED CONCRETE NOTES.
   (F) FOR MATERIALS OF PRESTRESSED CONCRETE PILES SEE PILE NOTES.
5. DESIGN STRESSES: SHALL FOLLOW A.A.S.H.T.O. STANDARD SPECIFICATIONS FOR HIGHWAY BRIDGES IN ADDITION TO THOSE LISTED BELOW.

CONCRETE	CLASS A OR CLASS BD
F'c	3000 P.S.I.
Fc	1200 P.S.I.
N	9

FOR PRESTRESSED CONCRETE BEAMS AND PILES, (INCLUDING PILE BUILD-UPS) SEE PRESTRESSED CONCRETE NOTES AND PILE NOTES.

6. REINFORCEMENT:
   (A) THE MINIMUM COVERING MEASURED FROM THE SURFACE OF THE CONCRETE TO THE FACE OF ANY REINFORCING STEEL SHALL BE AS FOLLOWS UNLESS OTHERWISE SPECIFIED ON THE PLANS:
   A.1 DECK SLABS
      A. TOP BARS = 1 1/2"
      B. BOTTOM BARS = 1 1/4"
   A.2 FOR PRESTRESSED CONCRETE BEAMS AND PILES SEE PRESTRESSED CONCRETE BEAM DETAILS AND PILE DETAILS.
   A.3 PIERS AND RETAINING WALLS = 2"
   A.4 CONCRETE CAST AGAINST AND PERMANENTLY EXPOSED TO EARTH = 3".
   (B) REINFORCING BARS SHALL BE DETAILED IN ACCORDANCE WITH A.C.I. MANUAL OF STANDARD PRACTISE FOR DETAILING REINFORCED CONCRETE HIGHWAY STRUCTURES UNLESS OTHERWISE NOTED.
   (C) MINIMUM CLEAR SPACING BETWEEN PARALLEL BARS SHALL BE 1 1/2 TIMES THE DIAMETER OF BARS (FOR NON BUNDLED BARS), BUT IN NO CASE SHALL THE CLEAR DISTANCE BETWEEN THE BARS BE LESS THAN 1 1/2 TIMES THE MAXIMUM SIZE OF THE COARSE AGGREGATE.
   (D) ALL DIMENSIONS RELATING TO REINFORCING BARS (EG. SPACING OF BARS, ETC.,) ARE TO CENTERS OF BARS UNLESS OTHERWISE NOTED.
   (E) REINFORCING BARS SHALL BE SECURELY TIED AT ALL INTERSECTIONS AND LAP SPLICES EXCEPT WHERE THE SPACING OF INTERSECTIONS IS LESS THAN ONE FOOT IN EACH DIRECTION, IN WHICH CASE ALTERNATE INTERSECTIONS SHALL BE TIED.
7. ELASTOMERIC PADS: BOTTOM OF BRIDGE BEARING PADS SHALL BE SECURED TO THE CONCRETE SEATS, TO PREVENT DISPLACEMENT, WITH ADHESIVES APPROVED BY THE ENGINEER.
8. CONSTRUCTION METHODS.
   (A) SEE STANDARD SPECIFICATIONS AND SPECIAL PROVISIONS.
   (B) TOP OF CONCRETE DECK SLAB SHALL BE CONSTRUCTED TO FOLLOW GRADES AND THE ROADWAY VERTICAL AND HORIZONTAL CURVES.
   (C) FOR CONCRETE FINISH SEE STANDARD SPECIFICATIONS AND FOR ARCHITECTURAL TREATMENT SEE DETAILS.
   (D) GIRDER CONCRETE SEATS RECEIVING ELASTOMERIC PADS SHALL BE POURED MONOLITHICALLY WITH SUPPORTING STRUCTURE. TOP OF CONCRETE SEATS SHALL BE FINISHED WITH A STEEL TROWEL TO A SMOOTH LEVEL SURFACE TO THE ELEVATION SHOWN ON THE PLANS.
   (E) IN THE INSTALLATION OF ANCHOR BOLTS FOR BRIDGE BEARING, THE CONTRACTOR SHALL PROVIDE A RIGID TEMPLATE TO MAINTAIN THE PROPER LOCATION AND SHALL PROTECT THEM AT ALL TIMES DURING THE PERIOD OF CONSTRUCTION. METHODS SHALL BE APPROVED BY THE ENGINEER.
   (F) EXCEPT AS OTHERWISE NOTED, ALL VERTICAL DIMENSIONS ARE MEASURED PLUMB.
9. GENERAL
   (A) ALL ITEMS NOTED INCIDENTAL WILL NOT BE PAID FOR SEPARATELY.
   (B) THE CONTRACTOR SHALL VERIFY THE LOCATION OF ALL UTILITY LINES AND NOTIFY THE RESPECTIVE OWNERS BEFORE COMMENCING THE WORK OF EXCAVATION OR THE DRIVING OF PILES, INCLUDING ANY TEMPORARY PILING OR SHEETING.
   (C) CONSTRUCTION JOINTS MAY BE RELOCATED OR ADDITIONAL ONES ADDED SUBJECT TO THE APPROVAL OF THE ENGINEER.
   (D) UNLESS OTHERWISE NOTED, ALL EXPOSED CONCRETE EDGES SHALL BE CHAMFERED 3/4" x 3/4".
   (E) FOR ELECTRICAL CONDUIT LOCATION DETAILS SEE ELECTRICAL DRAWINGS.
10. FOUNDATION NOTES:
   (A) FOR PILE DESIGN LOAD SEE FOUNDATION PLAN.
   (B) LOAD TEST PILES INDICATED IN FOUNDATION PLAN SHALL BE FURNISHED 5 FEET LONGER THAN REGULAR PILES. (SEE SPECIAL PROVISIONS.)
   (C) TEST PILES INDICATED IN FOUNDATION PLAN SHALL BE FURNISHED 5' LONGER THAN REGULAR PILES.
   (D) IN DRIVING EACH GROUP OF PILES, THE CONTRACTOR SHALL START FROM CENTER OF THE GROUP AND PROCEED OUTWARD.
   (E) ALL PILES SHALL BE DRIVEN AFTER THE EMBANKMENT FILL IS STABILIZED WITH SANDRAINS AS DETERMINED BY THE ENGINEER. (SEE SPECIAL PROVISIONS)
11. REFERENCES:
   (A) FOR PRESTRESSED CONCRETE NOTES, SEE DRAWINGS FOR PRESTRESSED BEAM DETAILS.
12. SYMBOLS AND ABREVIATIONS

(E) OR (EXP.)	- EXPANSION	JT.	- JOINT
(H)	- HINGE	N.T.S.	- NOT TO SCALE
ALT.	- ALTERNATE	O.C.	- ON CENTERS
AZ.	- AZIMUTH	O/S	- OFFSET
℄	- CENTERLINE	STR.	- STRAIGHT OR STRINGER
℄	- BASELINE	STIRR.	- STIRRUP
E.F.	- EACH FACE	TYP.	- TYPICAL
B.F.	- BOTH FACES	(T) OR T.	- TOP
F.F.	- FAR FACE	(B) OR B.	- BOTTOM
N.F.	- NEAR FACE	BRG.	- BEARING
C.J.	- CONSTRUCTION JOINT	B.H. ELEV.	- BUSH HAMMER ELEVATION
CL.	- CLEAR	T.O.D.	- TOP OF DECK
EL., ELEV.	- ELEVATION	W.P.	- WORKING POINT
E.P.	- EDGE OF PAVEMENT	@	- AT
N.B.	- NORTH BOUND	Ø OR DIA	- DIAMETER
FIN. GR.	- FINISHED GRADE	℄	- PLATE
S. B.	- SOUTH BOUND	G.R.P.	- GROUTED RUBBLE PAVING
F. W. R.	- FORT WEAVER ROAD		

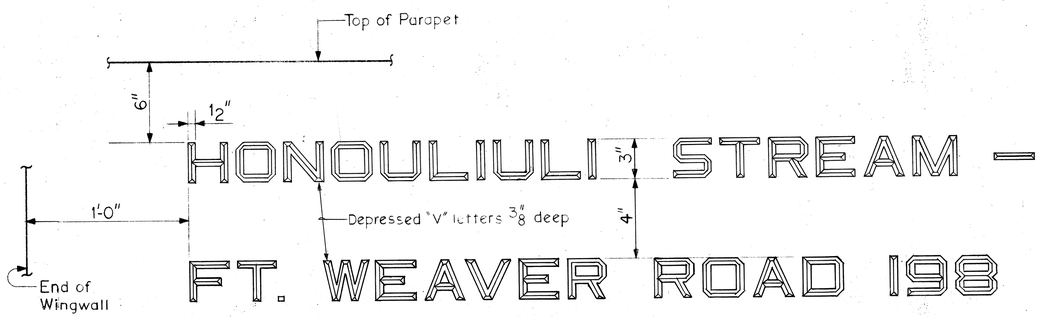

NOTE: FOR LOCATIONS OF NAME AND DATE, SEE SHEET Nº S-2. EXACT DETAILS AND SPACING OF LETTERS AND FIGURES SHALL BE AS DIRECTED BY THE ENGINEER.

NAME & DATE OF STRUCTURE

INDEX TO BRIDGE DRAWINGS

JOHN P. JOHNSON REGISTERED PROFESSIONAL ENGINEER No. 3647 HAWAII, U.S.A.

THIS WORK WAS PREPARED BY ME OR UNDER MY SUPERVISION.
John P. Johnson

STATE OF HAWAII
DEPARTMENT OF TRANSPORTATION
HIGHWAYS DIVISION

GENERAL NOTES

FORT WEAVER ROAD
SOUTH OF FARRINGTON HIGHWAY
TO THE VICINITY OF RENTON ROAD
HONOULIULI STREAM BRIDGE

SCALE: NONE DATE: SEPT 1979

SHEET No. S-1 OF S-18 SHEETS

ORIGINAL PLAN | SURVEY PLOTTED BY | DRAWN BY | TRACED BY | DESIGNED BY | QUANTITIES BY | CHECKED BY | DATE
NOTE BOOK No.

PRINTED ON NO. 1000H CLEARPRINT

FED. ROAD DIST. NO.	STATE	FED. AID PROJ. NO.	FISCAL YEAR	SHEET NO.	TOTAL SHEETS
HAWAII	HAW.	M-7600(2)	1980	169	244

CURVE (600) DATA	
Δ	25°-19'-56.24"
R	2750'
L	1215.86'
T	618.03'
P.C. Sta. =	124+67.00
P.T. Sta. =	136+82.86

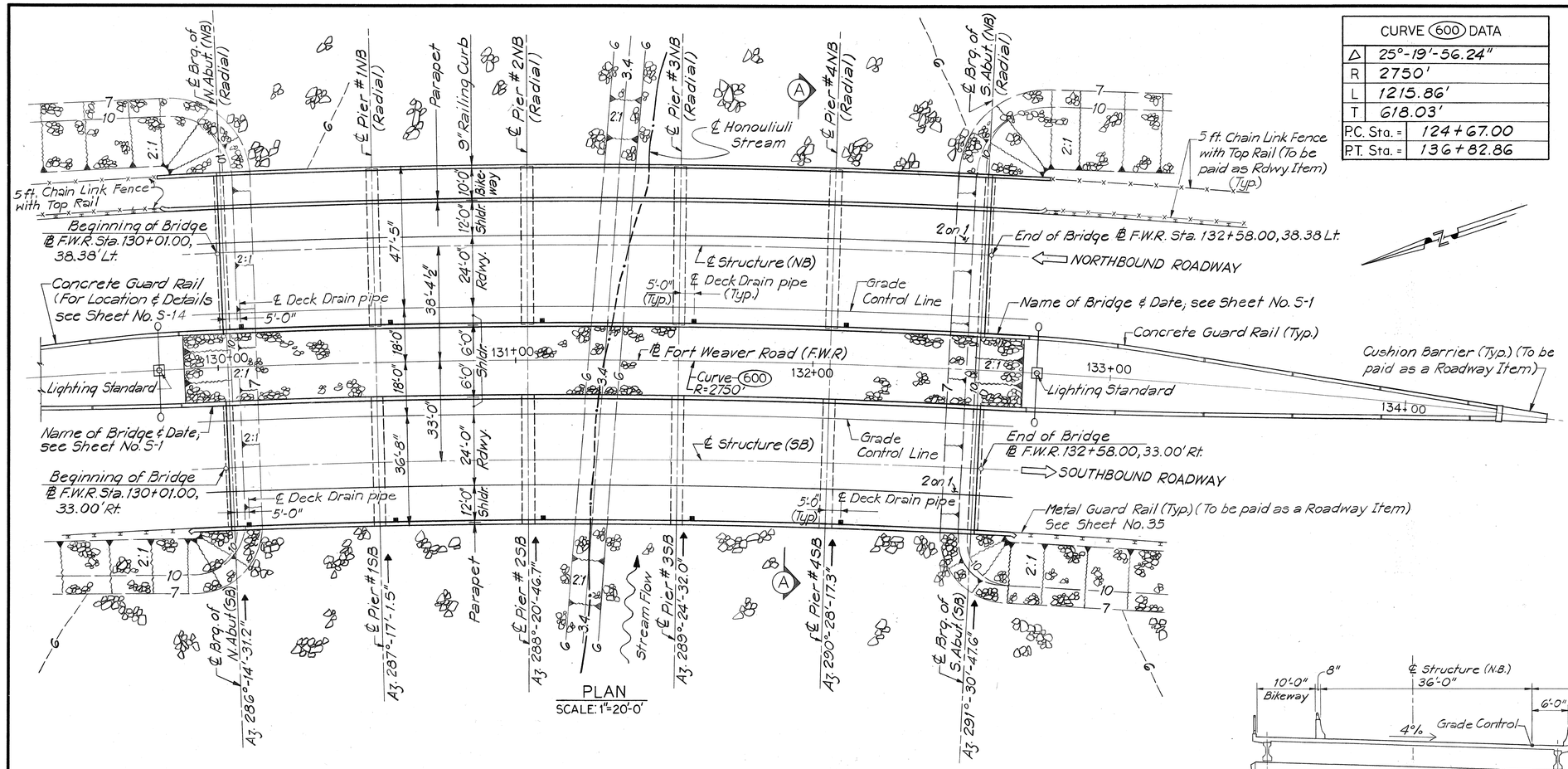

ESTIMATED QUANTITIES

Item No.	Item	Unit	Quantity
206.6000	Structure Excavation for Bridges	Cu.Yd.	93
206.7000	Structure Backfill	Cu.Yd.	825
206.8000	Filter Material	Cu.Yd.	33
503.1092	Concrete in Bridges (Except Footings)	L.S.	(1,048) C.Y.
503.1093	Concrete in Bridge Footings	L.S.	(332) C.Y.
504.2200	Type II Prestressed Conc. Girder	Lin.Ft.	4,080
505.0010	Pile Load Tests	Ea.	2
505.0020	Test Piles, Driven	Lin.Ft.	1,520
505.0411	Precast, Prestressed Conc. Piles, Furnished	Lin.Ft.	20,234
505.4110	Precast, Prestressed Conc. Piles, Driven	Lin.Ft.	10,340
505.6100	24 Inch Dia. Predrilled Holes	Lin.Ft.	1,128
505.9000	Extensions or Build-ups of Piles	F.A.	—
505.9100	Pile Driving Equipment Expense (Not to Exceed $8000.00)	L.S.	—
507.7100	Standard Parapet (Incl. End Post)	Lin.Ft.	1,150
507.9000	Type I Metal Bikeway Railing	Lin.Ft.	295
507.9100	Type II Metal Bikeway Railing	Lin.Ft.	285
602.0051	Reinf. Steel in Bridges	L.S.	(266,000) Lbs.
660.0100	Bitumen Coating	Lin.Ft.	12,580

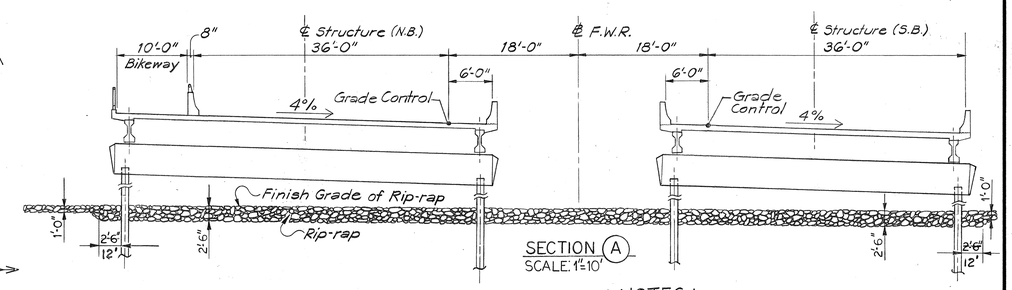

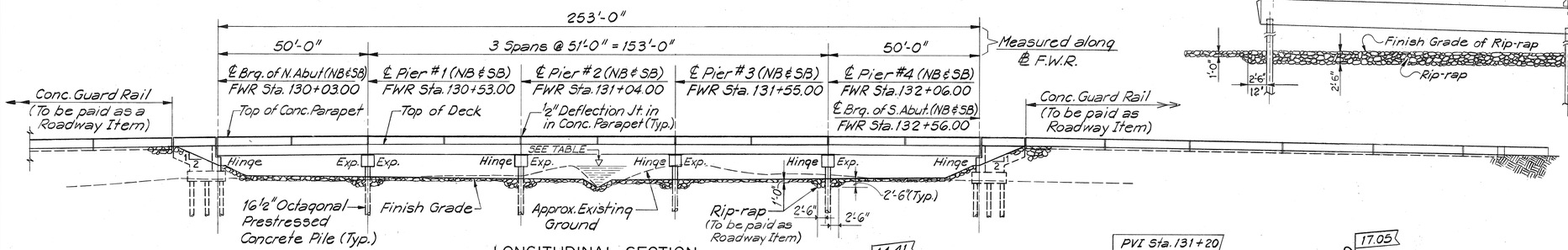

NOTES:

1. For Deck Drain Details see Sheet No. S-3
2. For limits of rip-rap see Sheet No. 35.
3. For 5 ft. chain link fence details see Standard Drawing DD 607-1, Sheet No. 58
4. For details of Concrete Guard Rail and Cushion Barrier see Sheet No. S-14
5. For locations and details of Lighting Standards see Civil and Electrical plans.

HONOULIULI STREAM HYDRAULIC DATA		
	Water Level	Water Discharge
50 Year Flood	El. 9.11	Q_{50} = 3500 cu.ft./sec.
100 Year Flood	El. 9.72	Q_{100} = 5000 cu.ft./sec.

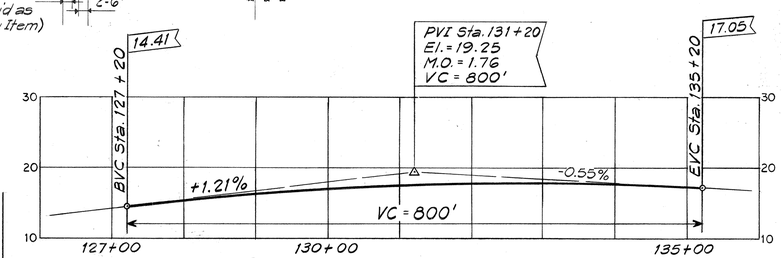

For Superelevations see Roadway Profile Drawings.

GRADE CONTROL PROFILE – SCALE: HOR. 1"=100'-0", VERT. 1"=10'-0"

DATE	REVISION
6/6/80	Changed Unit & Quantity for Item No. 660.0100 under Estimated Quantities, per Addendum No. 1.

ORIGINAL PLAN | NOTE BOOK | No. | SURVEY PLOTTED BY | DRAWN BY | TRACED BY | DESIGNED BY | QUANTITIES BY | CHECKED BY | DATE

JOHN P. JOHNSON REGISTERED PROFESSIONAL ENGINEER No. 3647 HAWAII, U.S.A.

THIS WORK WAS PREPARED BY ME OR UNDER MY SUPERVISION.

John P. Johnson

STATE OF HAWAII
DEPARTMENT OF TRANSPORTATION
HIGHWAYS DIVISION

GENERAL PLAN AND LONGITUDINAL SECTION

FORT WEAVER ROAD
SOUTH OF FARRINGTON HIGHWAY
TO THE VICINITY OF RENTON ROAD
HONOULIULI STREAM BRIDGE

SCALE: AS SHOWN DATE: SEPT 1979

SHEET No. S-2 OF S-18 SHEETS

169R

FED. ROAD DIST. NO.	STATE	FED. AID PROJ. NO.	FISCAL YEAR	SHEET NO.	TOTAL SHEETS
HAWAII	HAW.	M-7600 (2)	1980	170	244

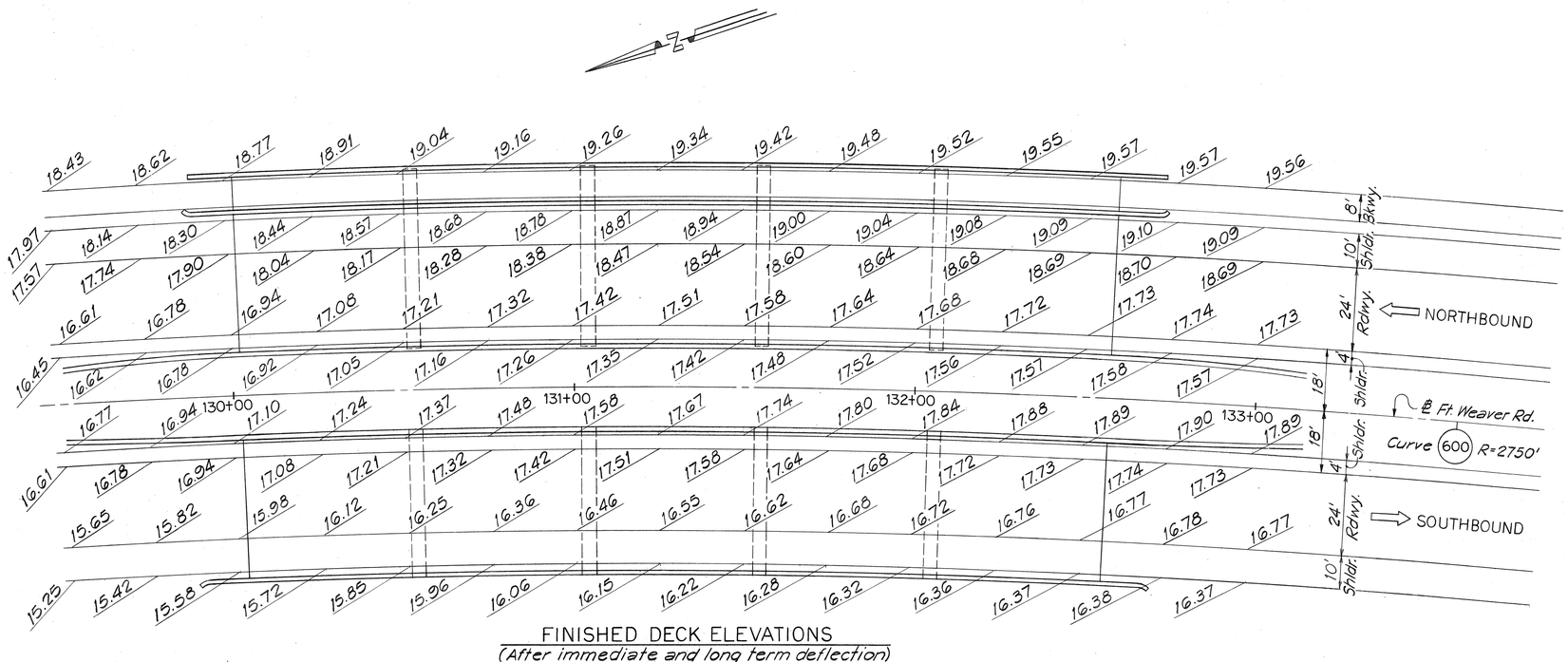

FINISHED DECK ELEVATIONS
(After immediate and long term deflection)
SCALE: 1"=20'

PILE ELEVATIONS AT PIERS

	PIER #1		PIER #2		PIER #3		PIER #4	
	PILE CUT-OFF ELEVATION	PILE TIP ELEVATION	PILE CUT-OFF ELEVATION	PILE TIP ELEVATION	PILE CUT-OFF ELEVATION	PILE TIP ELEVATION	PILE CUT-OFF ELEVATION	PILE TIP ELEVATION
Pile a	11.67	-95.00	11.88	-95.00	12.02	-95.00	12.15	-95.00
Pile b	11.42	↑	11.63	↑	11.77	↑	11.90	↑
Pile c	11.17		11.38		11.52		11.65	
Pile d	10.93		11.14		11.28		11.41	
Pile e	10.68		10.89		11.03		11.16	
Pile f	10.43		10.64		10.78		10.91	
Pile g	10.19		10.40		10.54		10.67	
Pile h	9.94		10.15		10.29		10.42	
Pile i	9.69		9.90		10.04		10.17	
Pile j	10.04		10.25		10.39		10.52	
Pile k	9.81		10.02		10.16		10.29	
Pile l	9.58		9.79		9.93		10.06	
Pile m	9.36		9.57		9.71		9.84	
Pile n	9.13		9.34		9.48		9.61	
Pile p	8.90		9.11		9.25		9.38	
Pile q	8.68	↓	8.89	↓	9.03	↓	9.16	↓
Pile r	8.45	-95.00	8.66	-95.00	8.80	-95.00	8.93	-95.00

NOTE: Elevation of lower limit of Bitumen Coating = -60.00 for all Piles in piers.

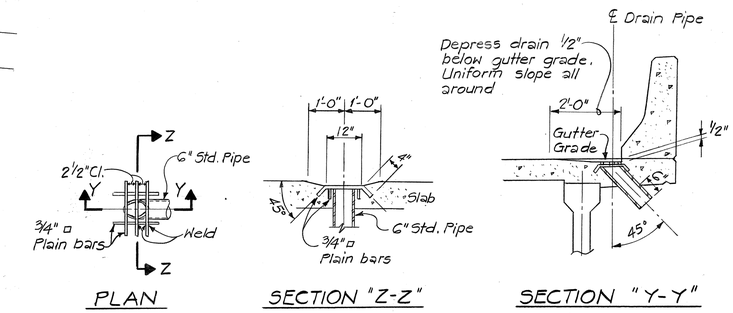

PLAN — SECTION "Z-Z" — SECTION "Y-Y"

DECK DRAIN DETAIL

Scale: 12" = 1'-0"
(All metal shall be hot dipped galvanized after fabrication)

NOTES:

1. For footing details of piers and abutments see Sheet Nos. S-4 thru S-7.
2. For Boring Logs see Sheet No. 73 & 74
3. For limit of Bitumen Coating see Sheet No. S-15
4. Design Pile loads: (AASHTO Group I)
   45 Tons for all Abutments.
   75 Tons for all Piers.
5. Deck drains shall be considered incidental to Concrete in Bridges and will not be paid separately.

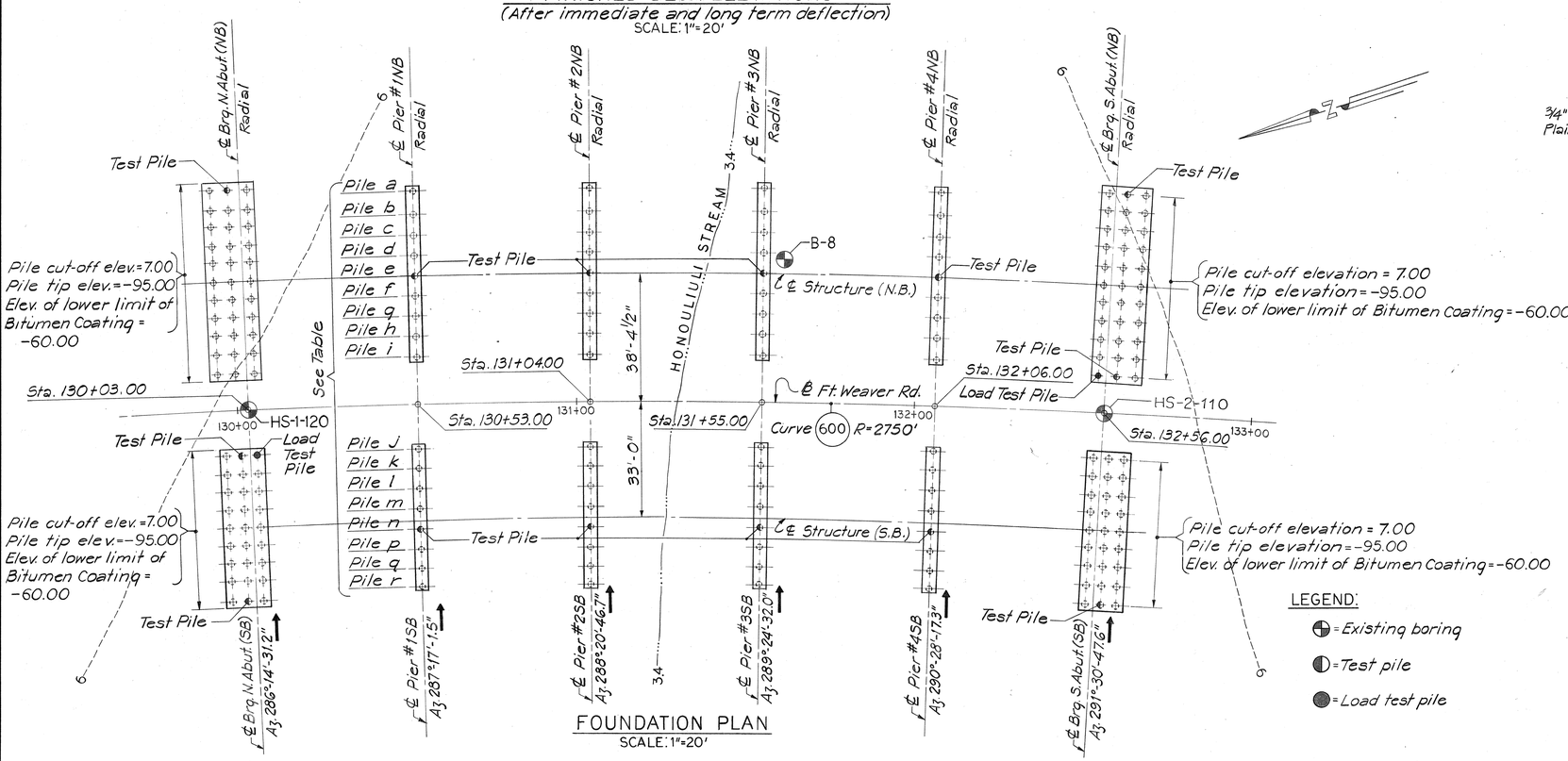

FOUNDATION PLAN
SCALE: 1"=20'

LEGEND:

- ◐ = Existing boring
- ◑ = Test pile
- ● = Load test pile

ORIGINAL PLAN	SURVEY PLOTTED BY	DATE
	DRAWN BY	
	TRACED BY	
NOTE BOOK	DESIGNED BY	
	QUANTITIES BY	
No.	CHECKED BY	

JOHN P. JOHNSON
REGISTERED PROFESSIONAL ENGINEER
No. 3647
HAWAII, U.S.A.

THIS WORK WAS PREPARED BY ME OR UNDER MY SUPERVISION.

John P. Johnson

STATE OF HAWAII
DEPARTMENT OF TRANSPORTATION
HIGHWAYS DIVISION

DECK ELEVATIONS AND FOUNDATION PLAN

FORT WEAVER ROAD
SOUTH OF FARRINGTON HIGHWAY
TO THE VICINITY OF RENTON ROAD
HONOULIULI STREAM BRIDGE

SCALE: 1"=20' DATE: SEPT 1979

SHEET No. S-3 OF S-18 SHEETS

FED. ROAD DIST. NO.	STATE	FED. AID PROJ. NO.	FISCAL YEAR	SHEET NO.	TOTAL SHEETS
HAWAII	HAW.	M-7600(2)	1980	171	244

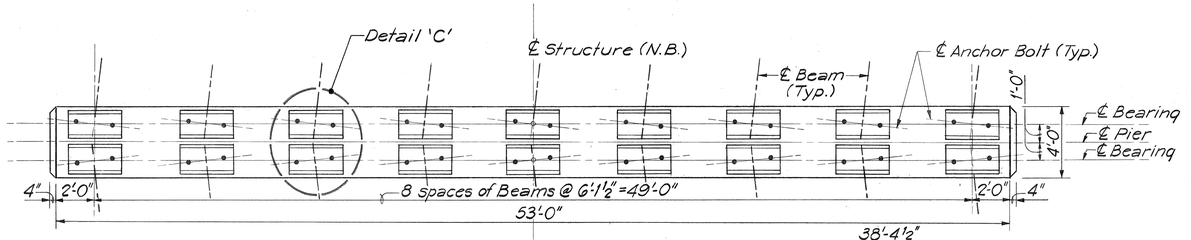

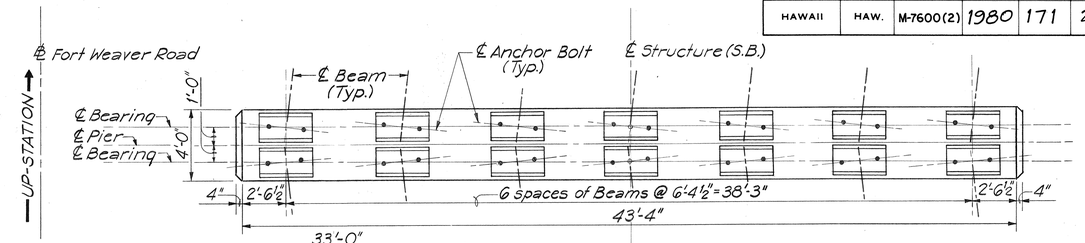

PIER PLAN
SCALE: 1/4" = 1'-0"

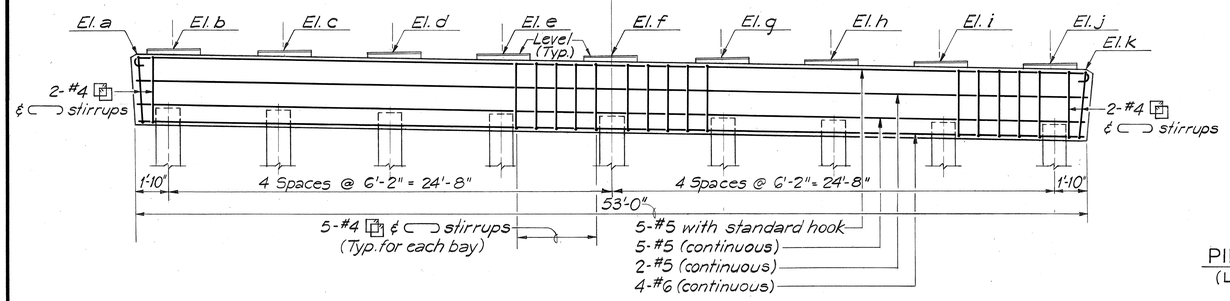

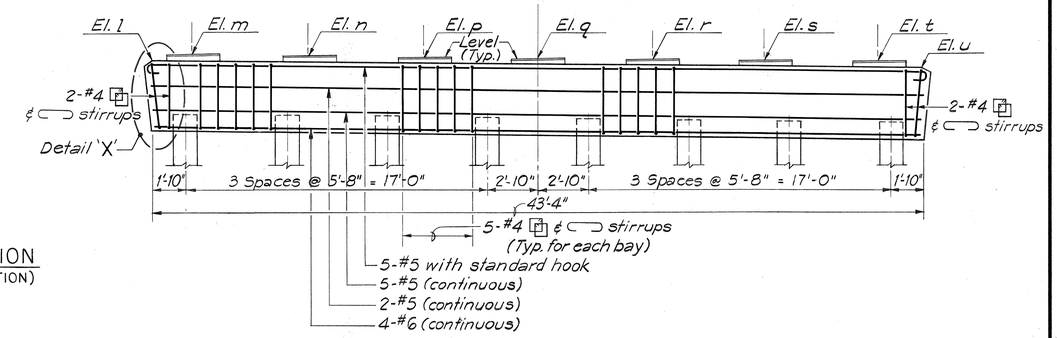

PIER ELEVATION
(LOOKING UP-STATION)
SCALE: 1/4" = 1'-0"

	TABLE OF PIER ELEVATIONS							
	Pier #1		Pier #2		Pier #3		Pier #4	
	UP-STATION	DOWN STATION	UP-STATION	DOWN STATION	UP-STATION	DOWN STATION	UP-STATION	DOWN STATION
El. a	14.74	14.74	14.95	14.95	15.09	15.09	15.22	15.22
El. b	15.07	15.07	15.29	15.29	15.44	15.44	15.55	15.55
El. c	14.83	14.83	15.04	15.04	15.19	15.19	15.30	15.30
El. d	14.58	14.58	14.80	14.80	14.95	14.95	15.06	15.06
El. e	14.34	14.34	14.55	14.55	14.70	14.70	14.81	14.81
El. f	14.09	14.09	14.31	14.31	14.46	14.46	14.57	14.57
El. g	13.85	13.85	14.06	14.06	14.22	14.22	14.32	14.32
El. h	13.60	13.60	13.82	13.82	13.97	13.97	14.08	14.08
El. i	13.36	13.36	13.57	13.57	13.73	13.73	13.83	13.83
El. j	13.11	13.11	13.33	13.33	13.48	13.48	13.59	13.59
El. k	12.62	12.62	12.83	12.83	12.97	12.97	13.10	13.10
El. l	13.11	13.11	13.32	13.32	13.46	13.46	13.59	13.59
El. m	13.44	13.44	13.66	13.66	13.81	13.81	13.92	13.92
El. n	13.19	13.19	13.40	13.40	13.55	13.55	13.66	13.66
El. p	12.93	12.93	13.15	13.15	13.30	13.30	13.41	13.41
El. q	12.68	12.68	12.89	12.89	13.05	13.05	13.15	13.15
El. r	12.42	12.42	12.64	12.64	12.79	12.79	12.90	12.90
El. s	12.17	12.17	12.38	12.38	12.54	12.54	12.64	12.64
El. t	11.91	11.91	12.13	12.13	12.28	12.28	12.39	12.39
El. u	11.38	11.38	11.60	11.60	11.74	11.74	11.86	11.86

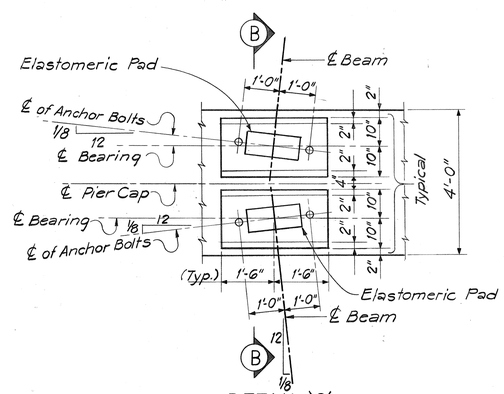

DETAIL 'C'
N.T.S.

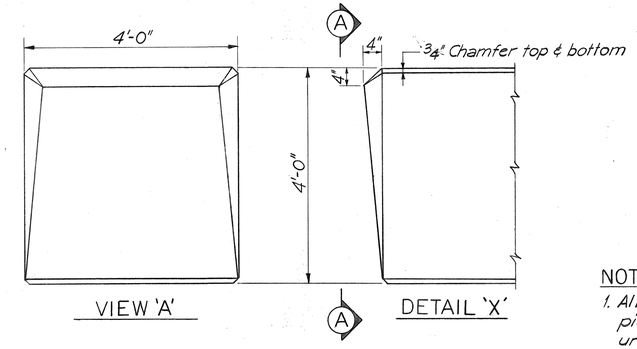

TYPICAL PIER CAP END DETAIL
SCALE: 3/4" = 1'-0"

NOTES:

1. All transverse dimensions shown on pier plan and pier elevation are measured along ℄ pier.
2. For Anchor Bolt details see Sheet No. S-12.
3. For Pile reinforcement extension into pier cap see sheet No. S-15
4. Pier cap concrete shall be paid under item "Concrete In Bridges (Except Footings").

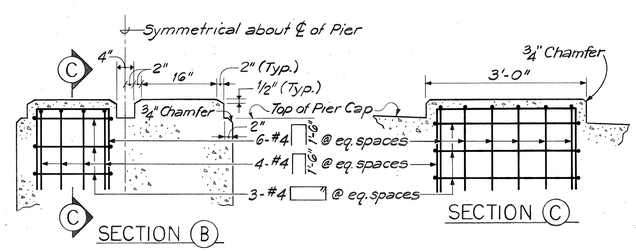

TYPICAL CONCRETE PEDESTAL DETAIL
SCALE: 3/4" = 1'-0"

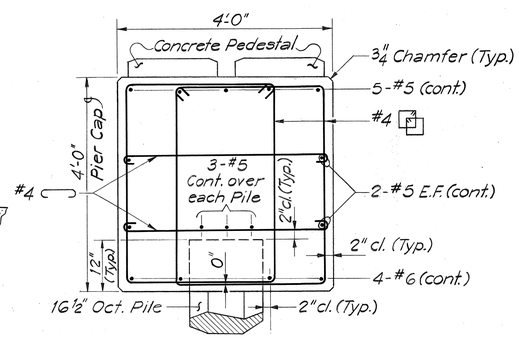

TYPICAL PIER SECTION
SCALE: 3/4" = 1'-0"

JOHN P. JOHNSON
REGISTERED PROFESSIONAL ENGINEER
No. 3647
HAWAII, U.S.A.

THIS WORK WAS PREPARED BY ME OR UNDER MY SUPERVISION.
John P. Johnson

STATE OF HAWAII
DEPARTMENT OF TRANSPORTATION
HIGHWAYS DIVISION

PIER DETAILS

FORT WEAVER ROAD
SOUTH OF FARRINGTON HIGHWAY
TO THE VICINITY OF RENTON ROAD
HONOULIULI STREAM BRIDGE

SCALE: AS SHOWN DATE: SEPT 1979
SHEET No. S-4 OF S-18 SHEETS

ORIGINAL PLAN
NOTE BOOK No.
SURVEY PLOTTED BY
DRAWN BY
TRACED BY
DESIGNED BY
QUANTITIES BY
CHECKED BY
DATE

171

FED. ROAD DIST. NO.	STATE	FED. AID PROJ. NO.	FISCAL YEAR	SHEET NO.	TOTAL SHEETS
HAWAII	HAW.	M-7600(2)	1980	172	244

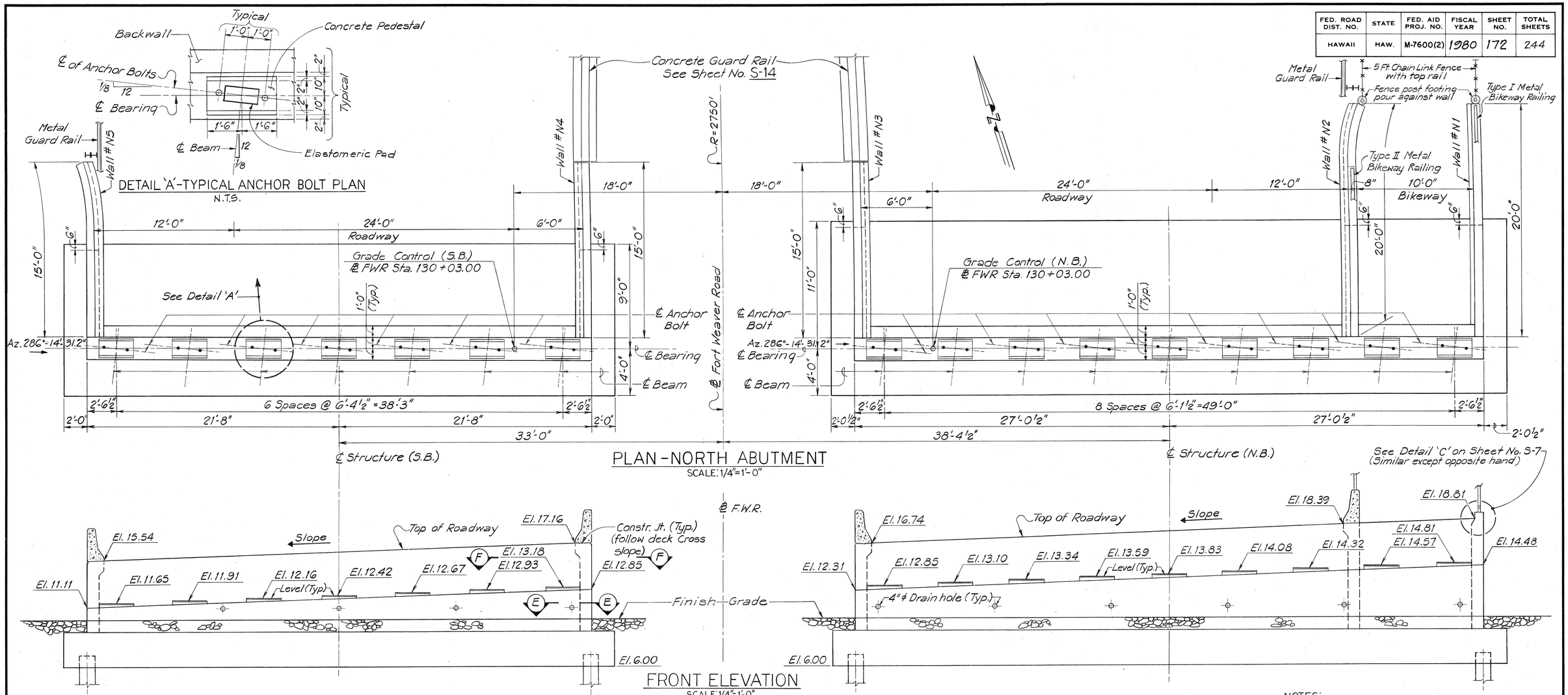

NOTES:

1. Walls of abutment shall follow roadway curve.
2. For metal guard rail details & connection to parapet see Sheet No's. S-11 & S-13
3. For concrete pedestal details see Sht. No. S-4.
4. For anchor bolt detail see Sheet No. S-12
5. For Pile reinforcement extension into footings see Sheet No. S-15.
6. For Sections (E) and (F) See Sheet No. S-7.

JOHN P. JOHNSON
REGISTERED PROFESSIONAL ENGINEER
No. 3647
HAWAII, U.S.A.

THIS WORK WAS PREPARED BY ME OR UNDER MY SUPERVISION.

John P. Johnson

STATE OF HAWAII
DEPARTMENT OF TRANSPORTATION
HIGHWAYS DIVISION

ABUTMENT-SHEET 1 OF 3

FORT WEAVER ROAD
SOUTH OF FARRINGTON HIGHWAY
TO THE VICINITY OF RENTON ROAD
HONOULIULI STREAM BRIDGE

SCALE: AS SHOWN DATE: SEPT 1979

SHEET No. S-5 OF S-18 SHEETS

ORIGINAL PLAN		DATE
NOTE BOOK	SURVEY PLOTTED BY	
	DRAWN BY	
	TRACED BY	
	DESIGNED BY	
	QUANTITIES BY	
	CHECKED BY	
No.		

FED. ROAD DIST. NO.	STATE	FED. AID PROJ. NO.	FISCAL YEAR	SHEET NO.	TOTAL SHEETS
HAWAII	HAW.	M-7600(2)	1980	173	244

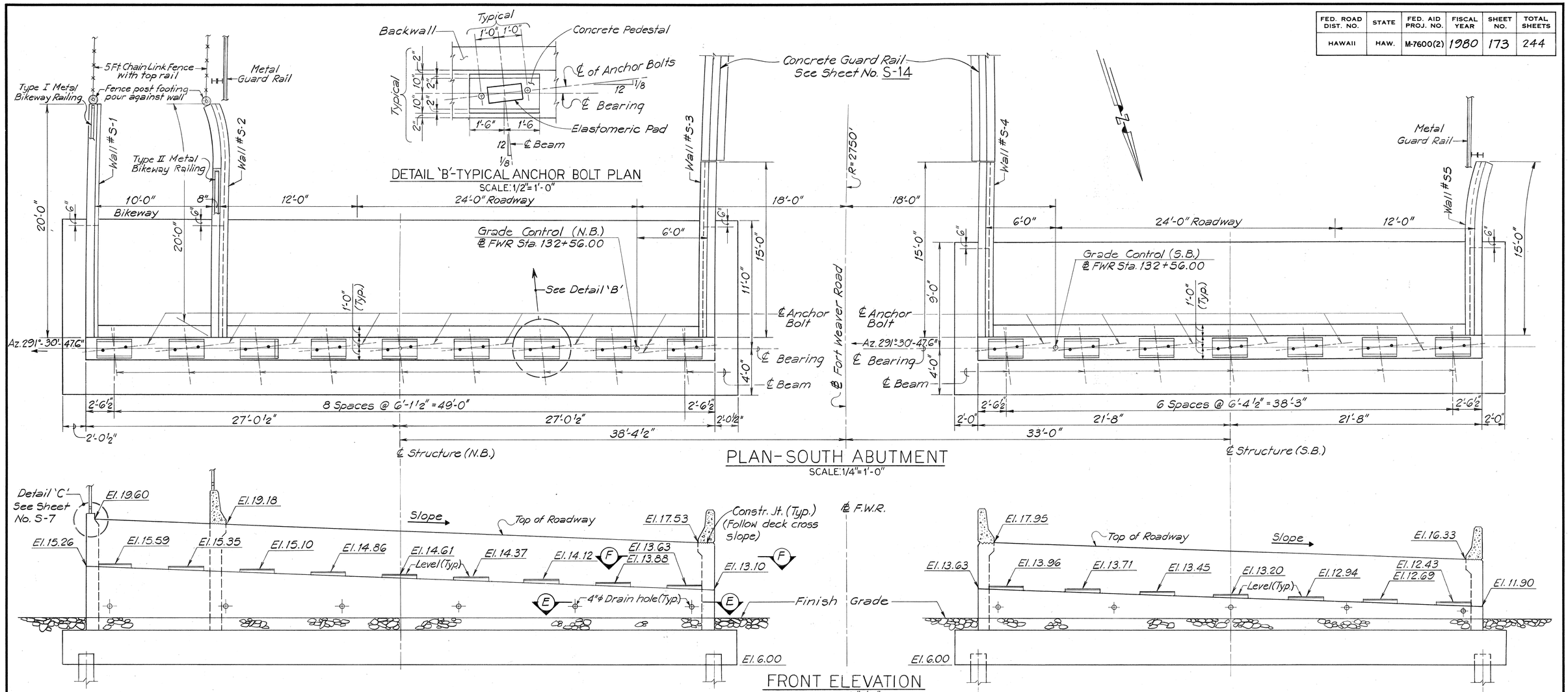

NOTE:
See 'NOTES:' on Sheet No. S-5.

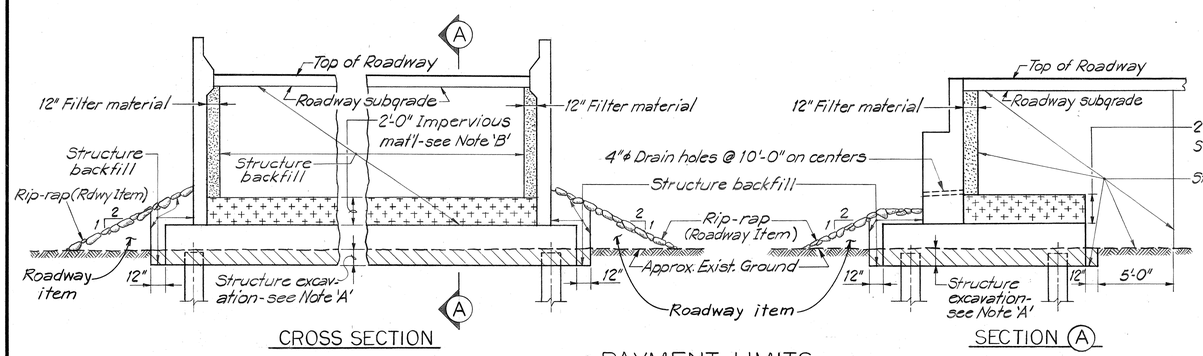

Note 'A'
Hatched areas denote the limit of structure excavation.

Note 'B'
Impervious material as selected by the Engineer shall be incidental to structure backfill. The subgrade upon which filter material is to be placed shall be made impervious as possible by pnuematic tamping or other approved methods.

JOHN P. JOHNSON REGISTERED PROFESSIONAL ENGINEER No. 3647 HAWAII, U.S.A.

THIS WORK WAS PREPARED BY ME OR UNDER MY SUPERVISION.

John P. Johnson

STATE OF HAWAII
DEPARTMENT OF TRANSPORTATION
HIGHWAYS DIVISION

ABUTMENT-SHEET 2 OF 3

FORT WEAVER ROAD
SOUTH OF FARRINGTON HIGHWAY
TO THE VICINITY OF RENTON ROAD
HONOULIULI STREAM BRIDGE

SCALE: AS SHOWN DATE: SEPT 1979

SHEET No. S-6 OF S-18 SHEETS

173

ORIGINAL PLAN | SURVEY PLOTTED BY | DRAWN BY | TRACED BY | DESIGNED BY | QUANTITIES BY | CHECKED BY | DATE | NOTE BOOK | No.

173

FED. ROAD DIST. NO.	STATE	FED. AID PROJ. NO.	FISCAL YEAR	SHEET NO.	TOTAL SHEETS
HAWAII	HAW.	M-7600(2)	1980	174	244

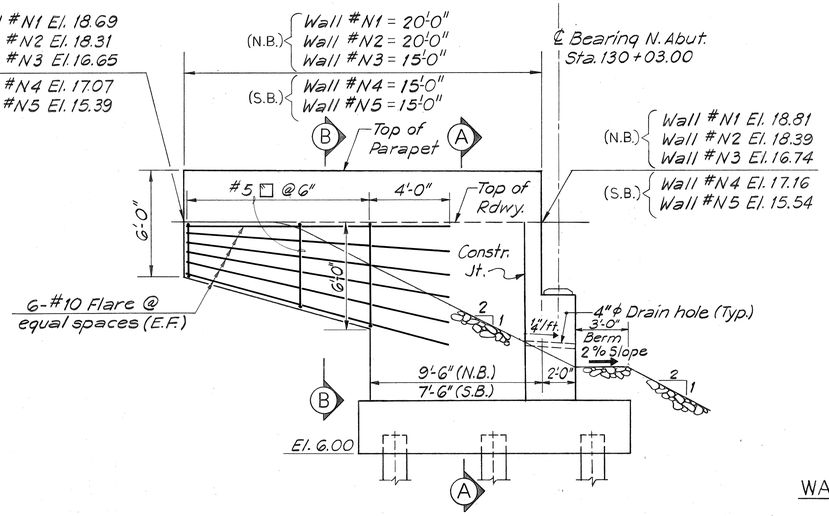

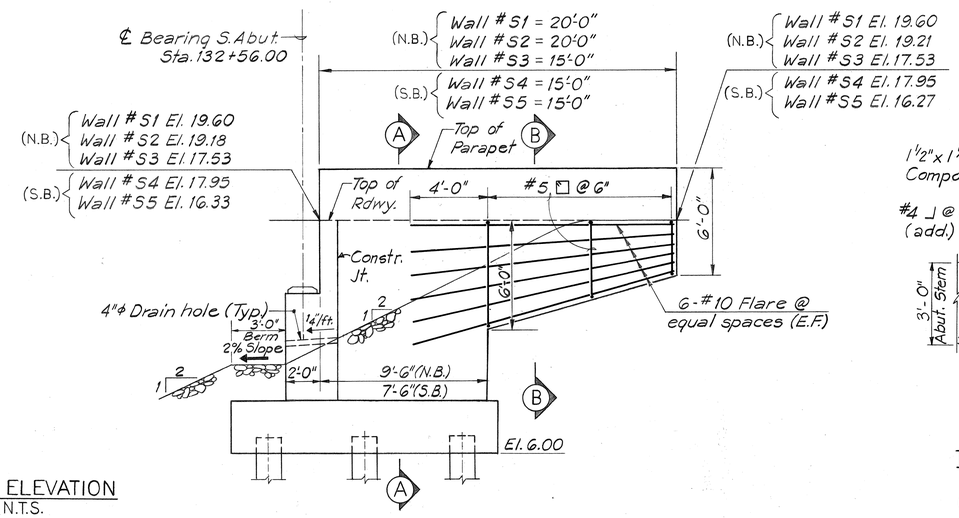

WALL ELEVATION
N.T.S.

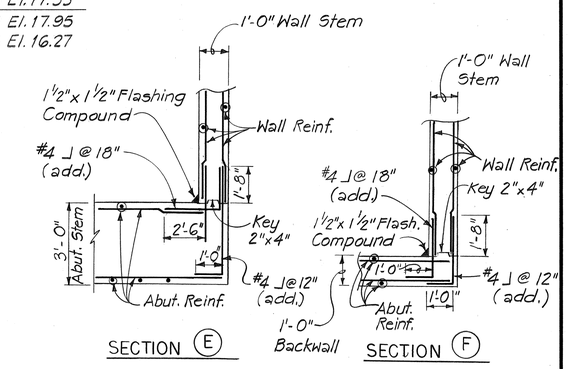

TYPICAL CORNER REINFORCING DETAIL
SCALE: 3/8" = 1'-0"
(For location of Sections see Sheets S5 and S6)

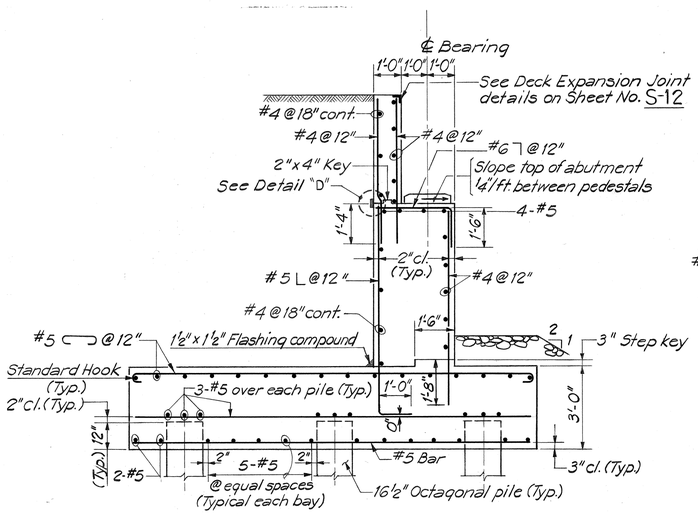

TYPICAL ABUTMENT SECTION
SCALE: 3/8"=1'-0"

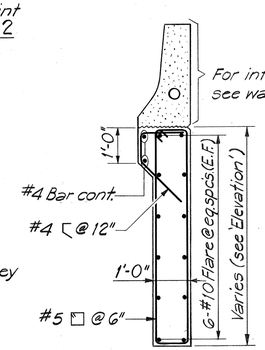

SECTION (B)
SCALE: 1/2"=1'-0"

DETAIL 'E'
SCALE: 3"=1'-0"

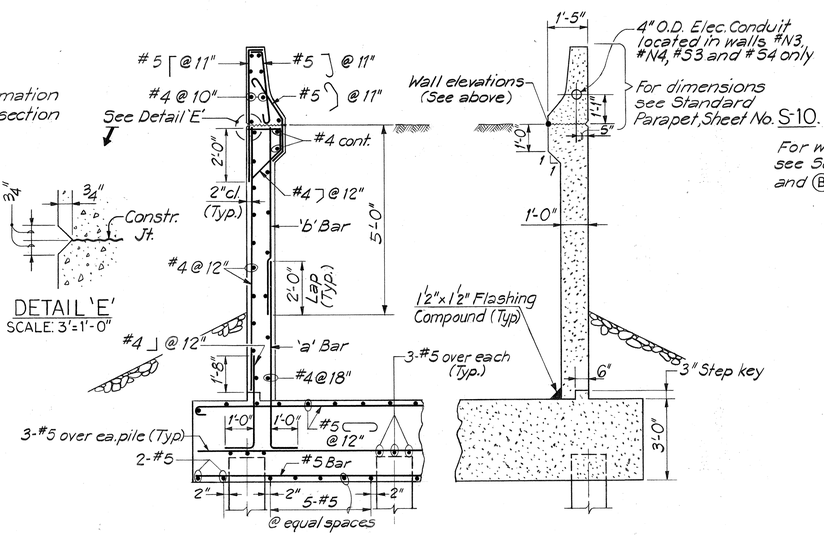

SECTION (A) - TYPICAL WALL SECTION
SCALE: 3/8"=1'-0"

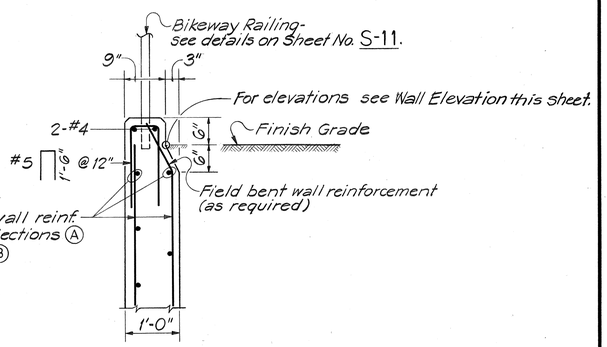

DETAIL 'C'
SCALE: 3/4"=1'-0"
(Typical for Walls #N1 & #S1 only)

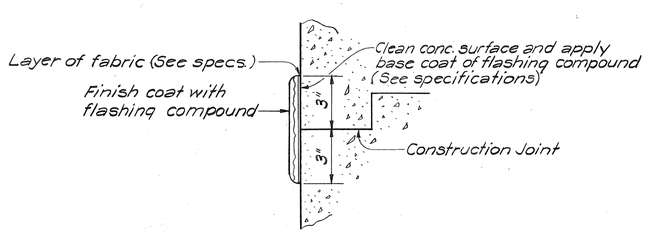

DETAIL 'D'
SCALE: 3"=1'-0"

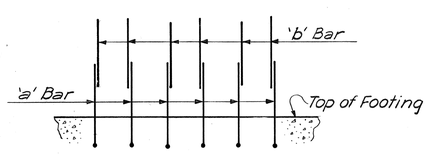

VERT. REINF. ARRANGEMENT
N.T.S.

WALL REINFORCING SCHEDULE		
Locations	'a' Bar	'b' Bar
Walls #N1, #S1	#8 ⌊ @ 6"	#5 @ 6"
Walls #N2, #S2	#4 ⌊ @ 12"	#4 @ 12"
Walls #N3, #S3	#7 ⌊ @ 6"	#5 @ 6"
Walls #N4, #S4	#8 ⌊ @ 6"	#5 @ 6"
Walls #N5, #S5	#7 ⌊ @ 6"	#5 @ 6"

JOHN P. JOHNSON
REGISTERED PROFESSIONAL ENGINEER
No. 3647
HAWAII, U.S.A.

THIS WORK WAS PREPARED BY ME OR UNDER MY SUPERVISION.
John P. Johnson

STATE OF HAWAII
DEPARTMENT OF TRANSPORTATION
HIGHWAYS DIVISION

ABUTMENT-SHEET 3 OF 3

FORT WEAVER ROAD
SOUTH OF FARRINGTON HIGHWAY
TO THE VICINITY OF RENTON ROAD
HONOULIULI STREAM BRIDGE

SCALE: AS SHOWN DATE: SEPT 1979
SHEET No. S-7 OF S-18 SHEETS

ORIGINAL PLAN	SURVEY PLOTTED BY	DATE
	DRAWN BY	
	TRACED BY	
NOTE BOOK	DESIGNED BY	
	QUANTITIES BY	
No.	CHECKED BY	

FED. ROAD DIST. NO.	STATE	FED. AID PROJ. NO.	FISCAL YEAR	SHEET NO.	TOTAL SHEETS
HAWAII	HAW.	M-7600(2)	1980	175	244

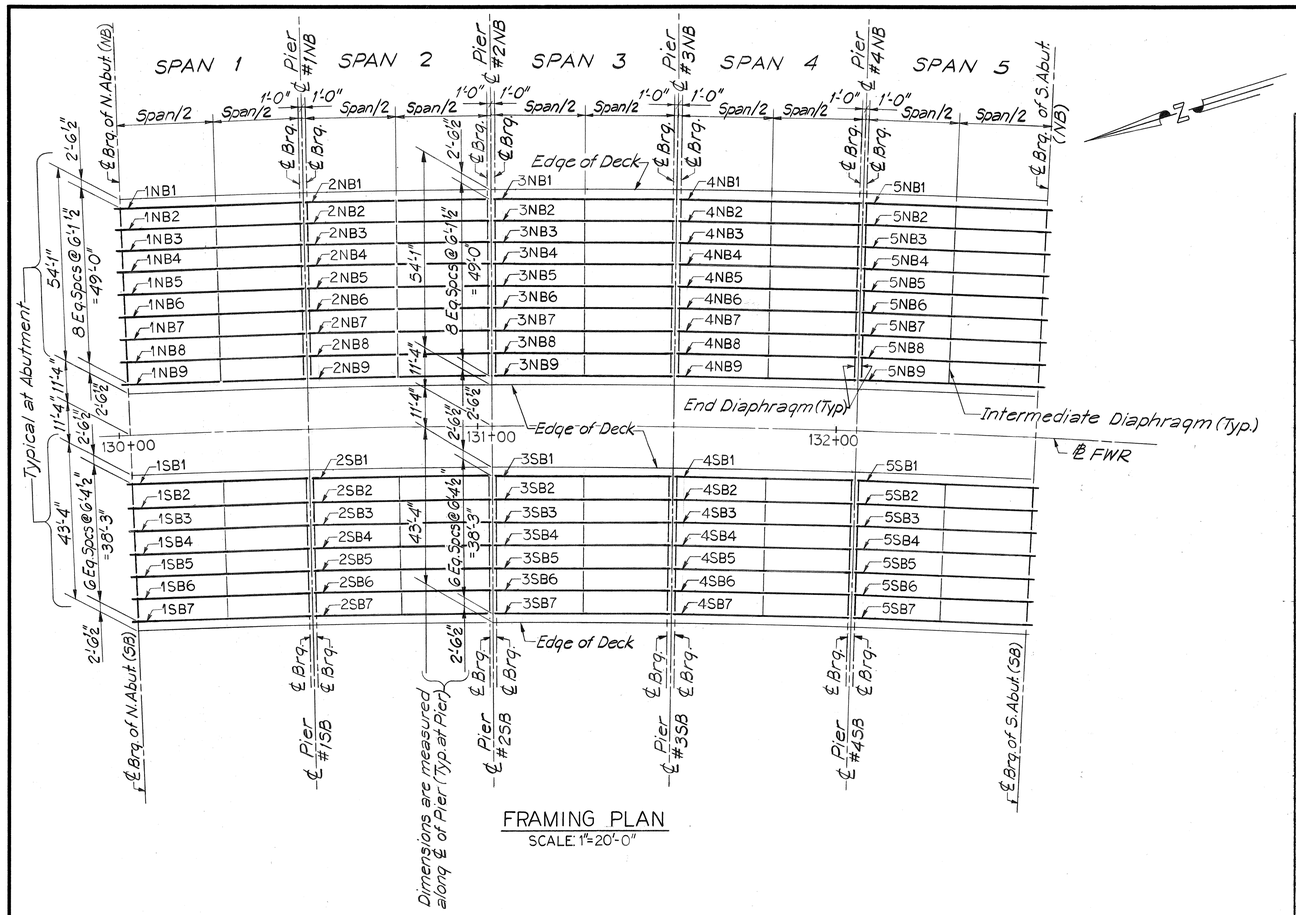

FRAMING PLAN

SCALE: 1"=20'-0"

NORTHBOUND SCHEDULE					SOUTHBOUND SCHEDULE				
BEAM MARK	BEAM LGTH. ℄ TO ℄ BRG.	t^1	t^2	BEAM TYPE	BEAM MARK	BEAM LGTH. ℄ TO ℄ BRG.	t^1	t^2	BEAM TYPE
1NB1	50.14'	1"	1"	AASHTO II	1SB1	48.75'	1"	1"	AASHTO II
2	50.03'				2	48.63'			
3	49.92'				3	48.52'			
4	49.81'				4	48.40'			
5	49.70'				5	48.28'			
6	49.59'				6	48.17'			
7	49.47'				7	48.05'	1"		
8	49.36'				2SB1	48.74'	1⅛"		
1NB9	49.25'	1"			2	48.62'			
2NB1	50.16'	1⅛"			3	48.51'			
2	50.05'				4	48.39'			
3	49.94'				5	48.27'			
4	49.82'				6	48.15'			
5	49.71'				2SB7	48.03'			
6	49.60'				3SB1	48.74'			
7	49.48'				2	48.62'			
8	49.37'				3	48.51'			
2NB9	49.26'				4	48.39'			
3NB1	50.16'				5	48.27'			
2	50.05'				6	48.15'			
3	49.94'				3SB7	48.03'	1⅛"		
4	49.82'				4SB1	48.74'	1 1/16"		
5	49.71'				2	48.62'			
6	49.60'				3	48.51'			
7	49.48'				4	48.39'			
8	49.37'				5	48.27'			
3NB9	49.26'	1⅛"			6	48.15'			
4NB1	50.16'	1 1/16"			4SB7	48.03'	1 1/16"		
2	50.05'				5SB1	48.75'	1"		
3	49.94'				2	48.63'			
4	49.82'				3	48.52'			
5	49.71'				4	48.40'			
6	49.60'				5	48.28'			
7	49.48'				6	48.17'			
8	49.37'				5SB7	48.05'	1"	1"	AASHTO II
4NB9	49.26'	1 1/16"							
5NB1	50.14'	1"							
2	50.03'								
3	49.92'								
4	49.81'								
5	49.70'								
6	49.59'								
7	49.47'								
8	49.36'								
5NB9	49.25'	1"	1"	AASHTO II					

NOTES:

1. t^1 is the Bearing Plate thickness (inches) at down station end of the Beam.
2. t^2 is the Bearing Plate thickness (inches) at up station end of the Beam.
3. For Bearing type see 'Longitudinal Section' on Sheet No. S-2 and details on Sheet No. S-12.
4. Beam length given is horizontal distance between ℄ Bearings.

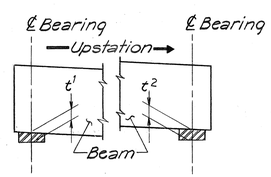

BEARING PLATE THICKNESS

N.T.S.

JOHN P. JOHNSON
REGISTERED PROFESSIONAL ENGINEER
No. 3647
HAWAII, U.S.A.

THIS WORK WAS PREPARED BY ME OR UNDER MY SUPERVISION.

John P. Johnson

STATE OF HAWAII
DEPARTMENT OF TRANSPORTATION
HIGHWAYS DIVISION

FRAMING PLAN AND SCHEDULE

FORT WEAVER ROAD
SOUTH OF FARRINGTON HIGHWAY
TO THE VICINITY OF RENTON ROAD
HONOULIULI STREAM BRIDGE

SCALE: AS SHOWN DATE: SEPT 1979

SHEET No. S-8 OF S-18 SHEETS

ORIGINAL PLAN | NOTE BOOK No. | SURVEY PLOTTED BY | DRAWN BY | TRACED BY | DESIGNED BY | QUANTITIES BY | CHECKED BY | DATE

175

FED. ROAD DIST. NO.	STATE	FED. AID PROJ. NO.	FISCAL YEAR	SHEET NO.	TOTAL SHEETS
HAWAII	HAW.	M-7600(2)	1980	176	244

NOTE "A": Bend bars in field 1½" below top of deck. All reinforcing dimensions are out to out.

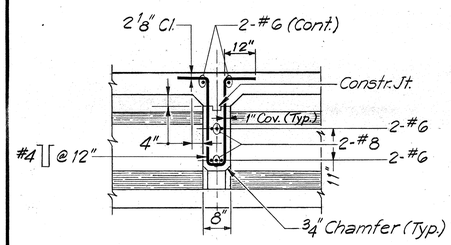

SECTION 'A'

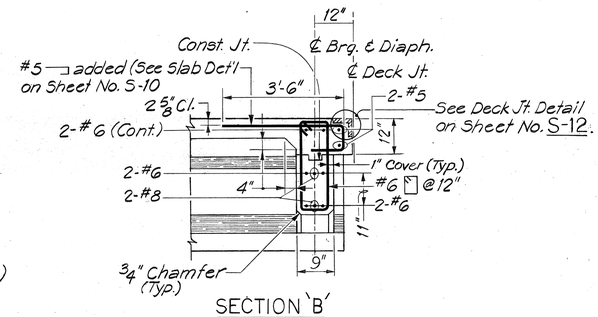

SECTION 'B'

TYPICAL DIAPHRAGM SECTIONS

N.T.S.

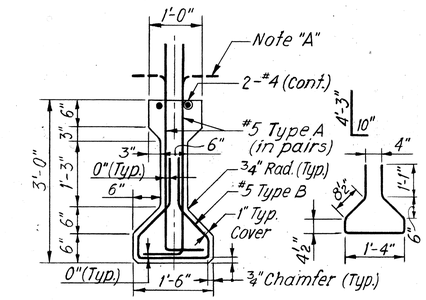

AASHTO TYPE II
TYPICAL BEAM SECTION

SCALE: 3/4"=1'-0"

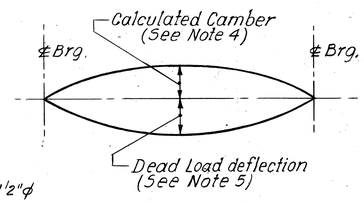

CAMBER DIAGRAM

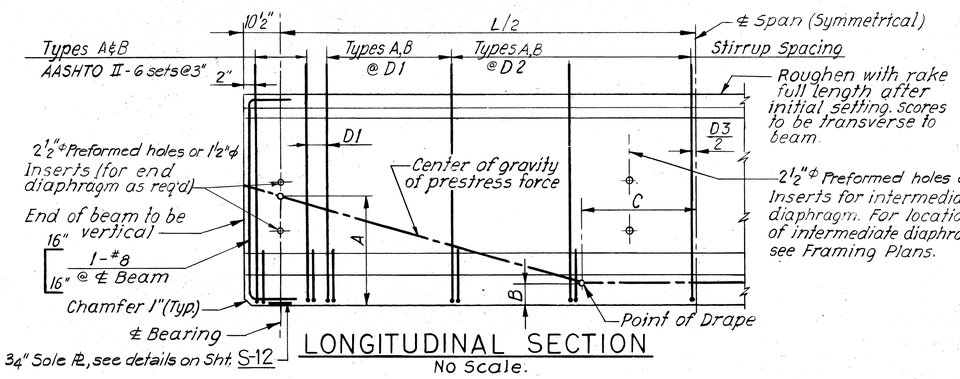

LONGITUDINAL SECTION

No Scale.

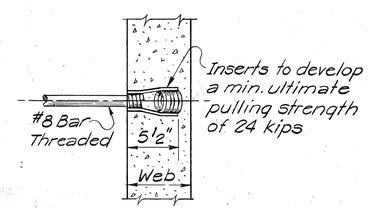

INSERT DETAIL

SCALE: 1½"=1'-0"

BEAM SCHEDULE

BEAM TYPE	INITIAL PRESTRESS FORCE (KIPS)	FINAL PRESTRESS FORCE (KIPS)	CALCULATED CAMBER SEE NOTE 4	DEAD LOAD DEFLECTION SEE NOTE 5	LOCATION OF CENTER OF GRAVITY OF PRESTRESS FORCE			STIRRUPS			REQUIRED MIN. ULT. CONC. STRENGTH BEFORE RELEASE OF STRANDS (P.S.I.)	REMARKS
					DIST A	DIST B	DIST. TO PT. OF DRAPE C	NO. OF STIRRUPS @ SPACING D1	NO. OF STIRRUPS @ SPACING D2			
II	548.0	424.0	-0.70"	0.33"	10.11"	5.22"	5.0'	11 @ 12"	balance @ 18"		4200	

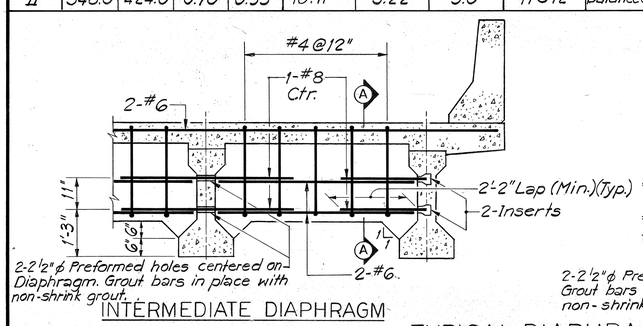

INTERMEDIATE DIAPHRAGM

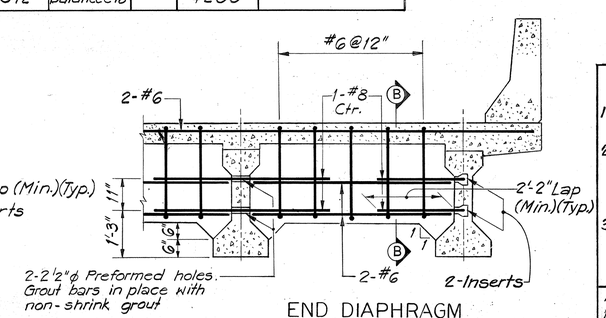

END DIAPHRAGM

TYPICAL DIAPHRAGM DETAILS

SCALE: 1/2"=1'-0"

NOTES FOR PRESTRESSED BEAMS:

PRETENSIONING

1. Concrete shall have a minimum ultimate 28 day cylinder strength of 6,000 psi.
2. Pretensioned strands shall be 7 wire ½"φ stress-relieved steel strands (area = 0.153 in²) with an ultimate strength of 270 ksi. For properties see State Standard Specifications.
   Initial strand stress (before any losses): 199 ksi.; Initial loss = 20,000 psi.
   Total loss due to creep, shrinkage, elastic shortening and relaxation of steel = 45,000 psi.
3. Non-prestressed reinforcing steel shall be Grade 40 unless otherwise noted. For properties see State Standard Specifications.
4. The calculated camber includes the effect of the initial prestress force and the weight of the beam after removal from bed. Negative values shown for calculated camber indicate a net upward deflection. Calculated camber values shown do not account for any camber growth of the beam. The actual camber shall not exceed the calculated camber shown on the plans by more than 100% at the time of installation.
5. The dead load deflection includes the combined effects of the weight of slab, haunch & diaphragm.
6. Strand pattern shall be symmetrical about the longitudinal ℄ of the beam.
7. Strand release sequence shall not induce any lateral deflection of the beam.
8. Contractor shall submit his proposed strand pattern and releasing sequence to the Engineer for approval.
9. During curing care shall be taken to avoid any lateral deflection of the beam due to improper orientation.
10. Lifting devices shall be placed as close as possible to the center line of bearings of the beam. Details and locations of lifting devices shall be submitted to the Engineer for approval. Such approval does not relieve the Contractor of his responsibilities if beam is damaged due to failure of the lifting device.
11. See Framing Plans for locations of diaphragms, type, mark number and length of individual girders. Lengths shown do not include effect of elastic shortening.
12. In lieu of the 7 wire ½" dia. stress-relieved steel strands (area 0.153 in²) with an ultimate strength of 270 ksi, the Contractor at his option may use 7 wire 0.6" dia. stress-relieved steel strands (area 0.217 in²) with an ultimate strength of 270 ksi. For properties of 0.6" dia. strand see special provisions. However the final prestress force and its center of gravity, as stated, shall not be revised.
13. Beams shall be stored in accordance with the specifications for at least 90 days before installation.

POST-TENSIONING
(Contractor's Option)

a. The ultimate 28-day cylinder strength of concrete shall be a minimum of 6,000 psi.
b. Post-tensioning steel shall consist of either ½"φ, 270 ksi S/R multistrand tendons or high strength alloy steel bars. Sheathing shall be galvanized rigid duct (coef. of friction μ = 0.25 and wobble coef. K = 0.0002) for strands and galvanized metal sheathing (μ = 0.15 and k = 0.0002) for bars.
c. Loss due to creep, shrinkage, elastic shortening and relaxation of steel to be assumed = 35,000 psi.
d. Contractor shall submit the post-tensioned beam design including elongation, jacking and deflection computation to Engineer for approval. Estimate of losses (apart from that listed above) peculiar to post-tensioning shall be part of the calculations
e. Contractor shall submit the tendon pattern and profile, sequence of stressing and anchorage details to Engineer for approval. Tendons location and post-tensioning shall be symmetrical about the longitudinal ℄ of the beam.
f. Pretensioning notes 3, 9 10 and 11 also apply to post-tensioning.

BUNDLING OF PRESTRESSING REINFORCEMENT

ARRANGEMENT AND CLEARANCE FOR PRETENSIONED STRANDS

1. Strands may be bundled in groups as shown.
2. The min. distance "a" between groups or individual strands is 2" for ½" strands.
3. "a" is measured between centers of adjacent strands.

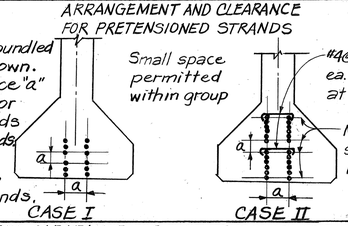

ARRANGEMENT AND CLEARANCE FOR POST TENSIONED STRANDS
1. Horizontal clearance between units equals 2" min.
2. Units may be bundled vertically in groups of 3 max.
3. Vertical clearance between bundled units equal 3" min.
4. Approval of the Engineer is required for deviation.

JOHN P. JOHNSON REGISTERED PROFESSIONAL ENGINEER No. 3647 HAWAII, U.S.A.

THIS WORK WAS PREPARED BY ME OR UNDER MY SUPERVISION.

John P. Johnson

STATE OF HAWAII
DEPARTMENT OF TRANSPORTATION
HIGHWAYS DIVISION

PRESTRESSED BEAM DETAILS

FORT WEAVER ROAD
SOUTH OF FARRINGTON HIGHWAY
TO THE VICINITY OF RENTON ROAD
HONOULIULI STREAM BRIDGE

SCALE: AS SHOWN DATE: SEPT '79

SHEET No. S-9 OF S-18 SHEETS

ORIGINAL PLAN | SURVEY PLOTTED BY | DRAWN BY | TRACED BY | DESIGNED BY | QUANTITIES BY | CHECKED BY | DATE | NOTE BOOK | No.

FED. ROAD DIST. NO.	STATE	FED. AID PROJ. NO.	FISCAL YEAR	SHEET NO.	TOTAL SHEETS
HAWAII	HAW.	M-7600(2)	1980	177	244

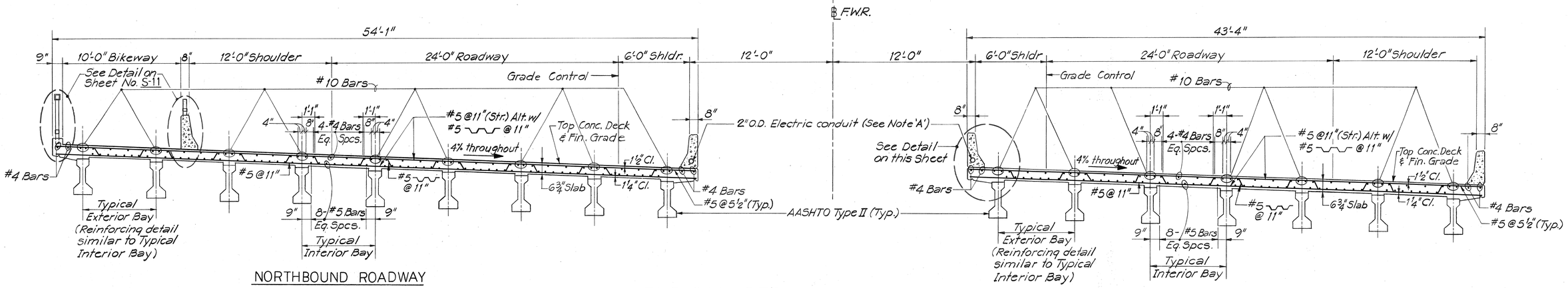

TYPICAL DECK SECTION

SCALE: 1/4"=1'-0"

Note 'A': 2" O.D. Electric conduit located in interior parapets only. For locations see Highway and Electrical plans.

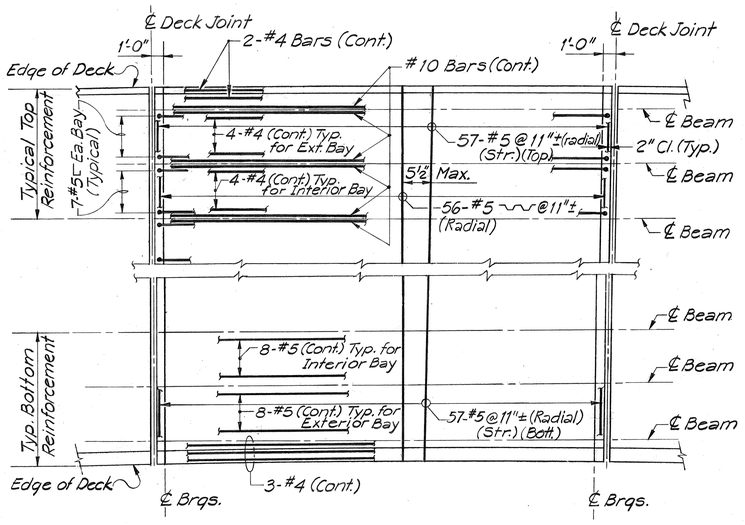

Note: Splices of Longitudinal Reinforcement shall be staggered.

TYPICAL DECK REINF. PLAN

N.T.S.

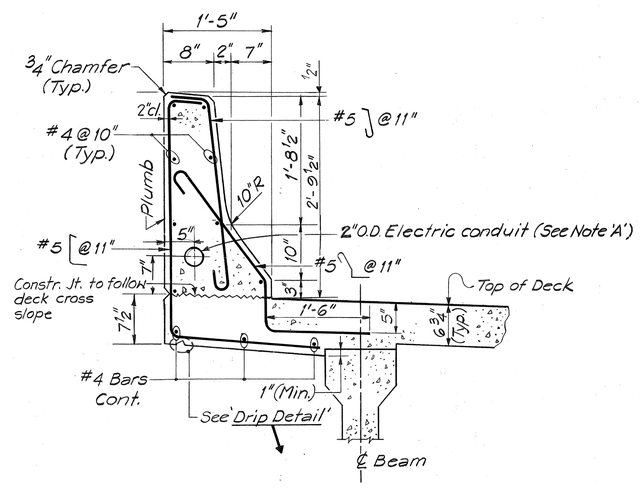

STANDARD PARAPET DETAIL

SCALE: 1"= 1'-0"

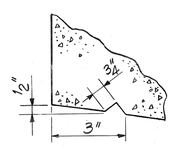

DRIP DETAIL

N.T.S.

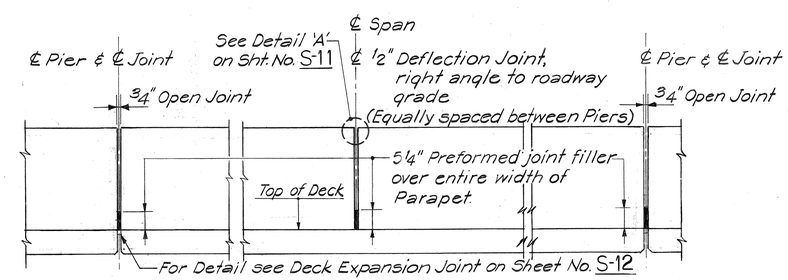

STANDARD PARAPET TYPICAL LONGITUDINAL SECTION

SCALE: ½"=1'-0"

NOTE:
Concrete in bridge deck slab (excluding diaphragms & parapets) shall be Class BD.

ORIGINAL PLAN		DATE
	SURVEY PLOTTED BY	
	DRAWN BY	
	TRACED BY	
NOTE BOOK	DESIGNED BY	
	QUANTITIES BY	
No.	CHECKED BY	

JOHN P. JOHNSON REGISTERED PROFESSIONAL ENGINEER No. 3647 HAWAII, U.S.A.

THIS WORK WAS PREPARED BY ME OR UNDER MY SUPERVISION.

John P. Johnson

STATE OF HAWAII
DEPARTMENT OF TRANSPORTATION
HIGHWAYS DIVISION

DECK REINFORCEMENT AND PARAPET DETAILS

FORT WEAVER ROAD
SOUTH OF FARRINGTON HIGHWAY
TO THE VICINITY OF RENTON ROAD
HONOULIULI STREAM BRIDGE

SCALE: AS SHOWN DATE: SEPT 1979

SHEET No. S-10 OF S-18 SHEETS

FED. ROAD DIST. NO.	STATE	FED. AID PROJ. NO.	FISCAL YEAR	SHEET NO.	TOTAL SHEETS
HAWAII	HAW.	M-7600(2)	1980	178	244

NOTE

Types A Panel: Length = 3'-8"
Types B Panel: Length Varies, 3'-11" Max.

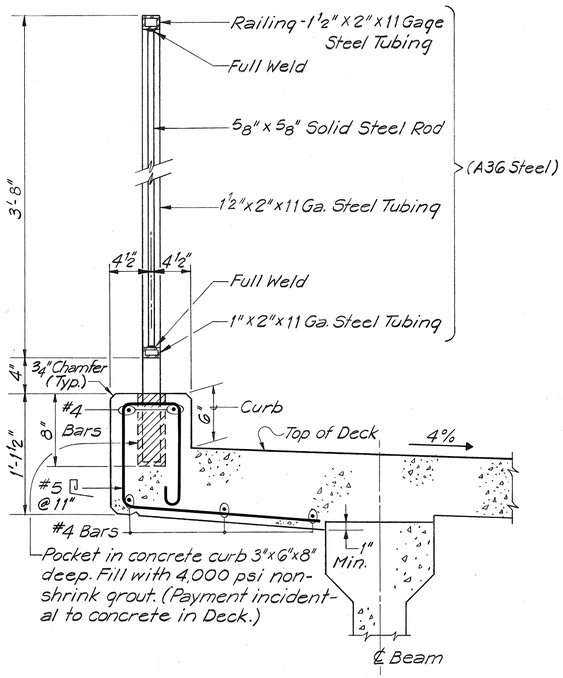

TYPICAL SECTION - TYPE I METAL BIKEWAY RAILING
SCALE: 1½" = 1'-0"

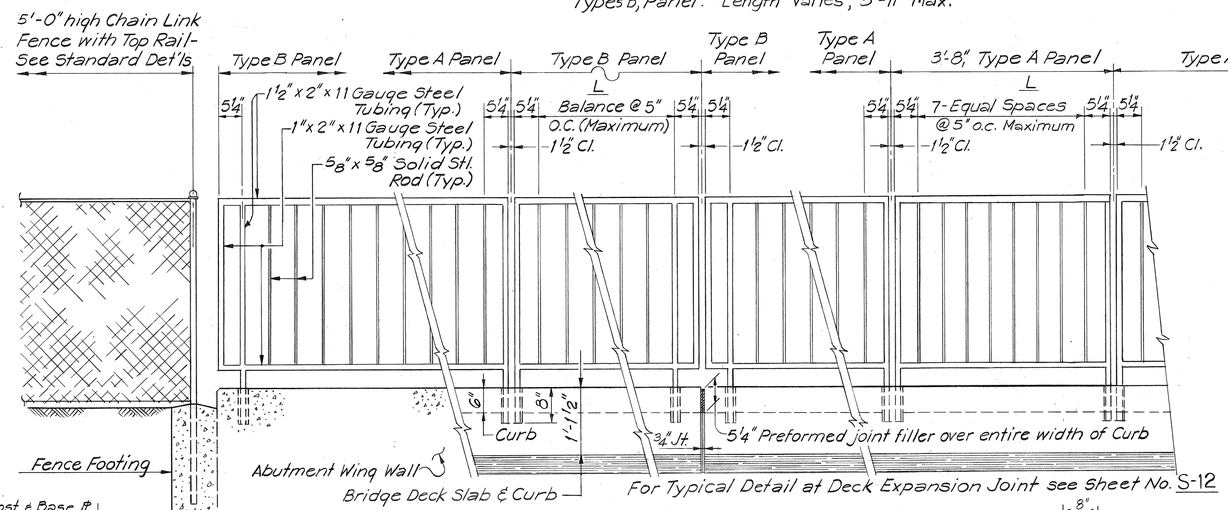

TYPE I METAL BIKEWAY RAILING ELEVATION
N.T.S.

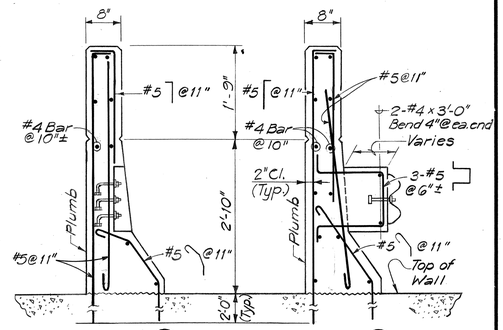

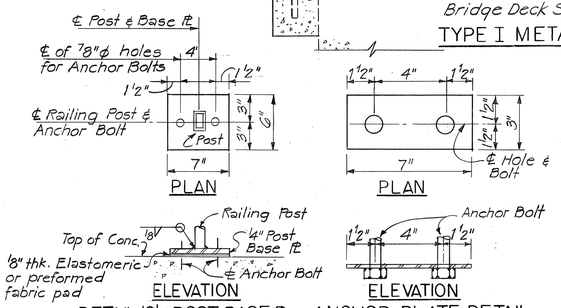

DETAIL 'C' - POST BASE Pl.
(Incidental to Railing)
Scale: 1/2" = 1'-0"

ANCHOR PLATE DETAIL
(Incidental to Railing)
Scale: 3" = 1'-0"

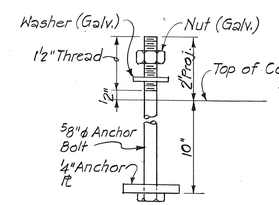

ANCHOR BOLT
(Galv. Steel ASTM A325)
(Incidental to Railing)
6" = 1'-0"

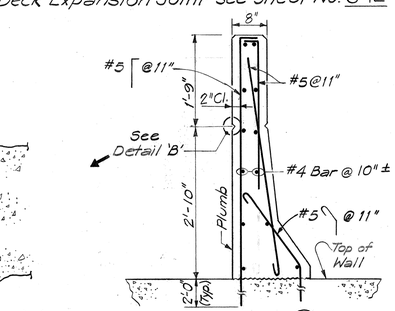

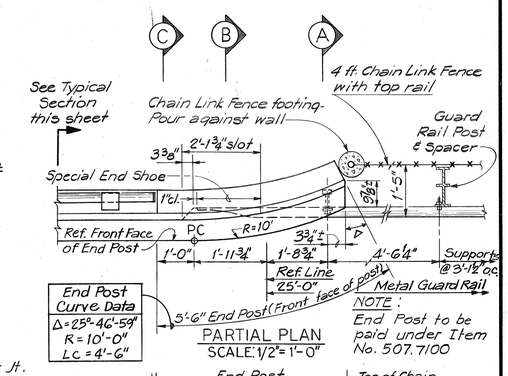

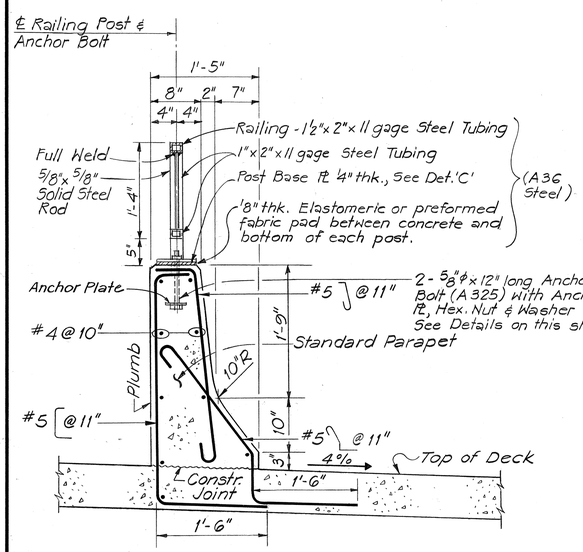

TYPICAL SECTION - TYPE II METAL BIKEWAY RAILING ON STANDARD PARAPET
SCALE: 1" = 1'-0"

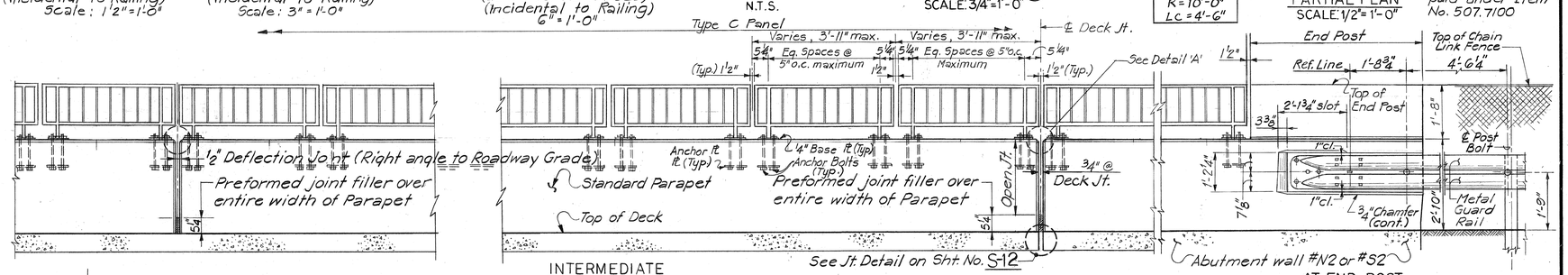

ELEVATION - TYPE II METAL BIKEWAY RAILING ON STANDARD PARAPET
SCALE: 1/2" = 1'-0"

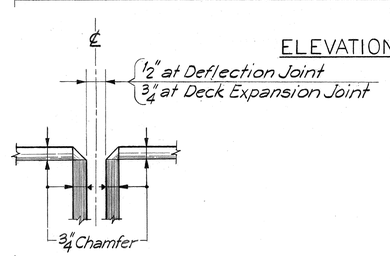

DETAIL 'A'
N.T.S.

NOTES:

1. Steel railing shall be hot-dipped galvanized after fabrication.
2. Non-shrink grout admixture shall be non-metallic.
3. For special end shoe of metal guard rail see details on Sht. S-13
4. For additional information for installation metal guard rail see Sheet No. S-13
5. For chain link fence detail see Standard Drawing Sheet No. 58
6. Rail post shall be normal to grade.
7. Anchor bolts shall be embedded such that the threads are excluded from the shear plane and approximately 2 threads are exposed above the nut.

JOHN P. JOHNSON
REGISTERED PROFESSIONAL ENGINEER
No. 3647
HAWAII, U.S.A.

THIS WORK WAS PREPARED BY ME OR UNDER MY SUPERVISION.
John P. Johnson

STATE OF HAWAII
DEPARTMENT OF TRANSPORTATION
HIGHWAYS DIVISION

RAILING DETAILS

FORT WEAVER ROAD
SOUTH OF FARRINGTON HIGHWAY
TO THE VICINITY OF RENTON ROAD
HONOULIULI STREAM BRIDGE

SCALE: AS SHOWN DATE: SEPT 1979
SHEET No. S-11 OF S-18 SHEETS

ORIGINAL PLAN | SURVEY PLOTTED BY | DRAWN BY | TRACED BY | DESIGNED BY | QUANTITIES BY | CHECKED BY | NOTE BOOK | NO. | DATE

FED. ROAD DIST. NO.	STATE	FED. AID PROJ. NO.	FISCAL YEAR	SHEET NO.	TOTAL SHEETS
HAWAII	HAW.	M-7600(2)	1980	179	244

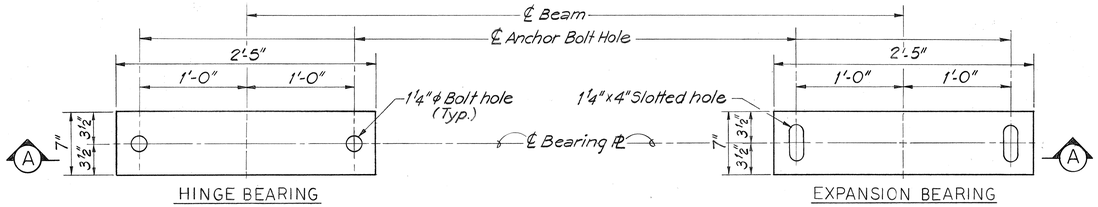

PLAN-BEARING PLATES
SCALE: 1½"=1'-0"

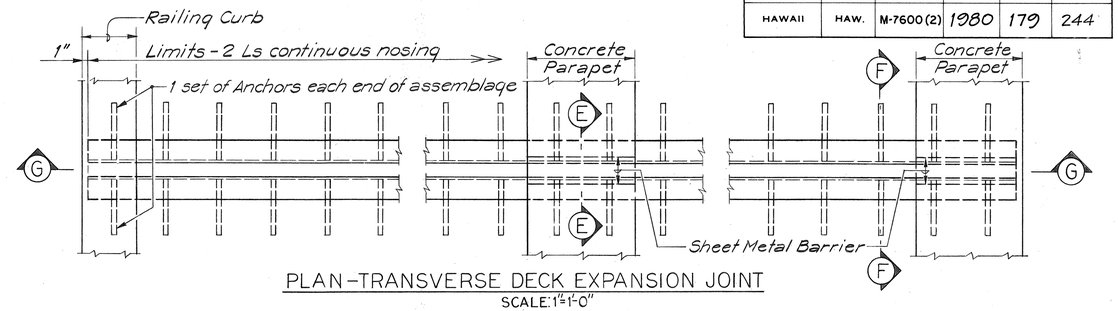

PLAN-TRANSVERSE DECK EXPANSION JOINT
SCALE: 1"=1'-0"

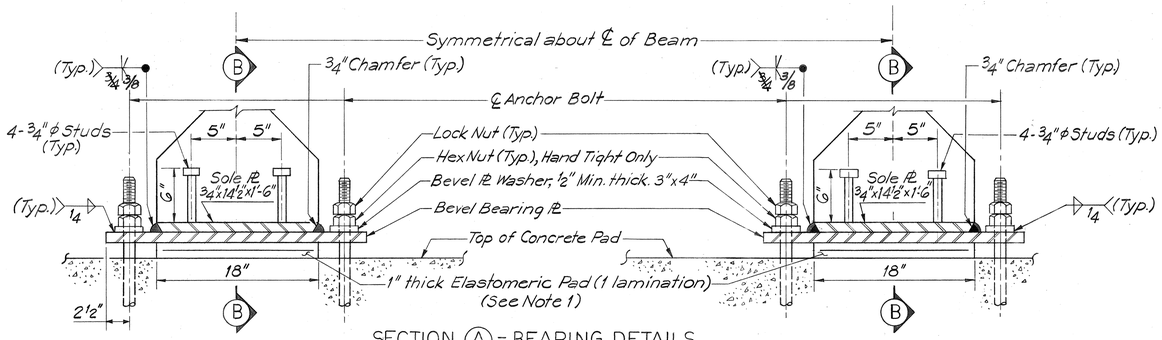

SECTION (A) - BEARING DETAILS
SCALE: 1½"=1'-0"

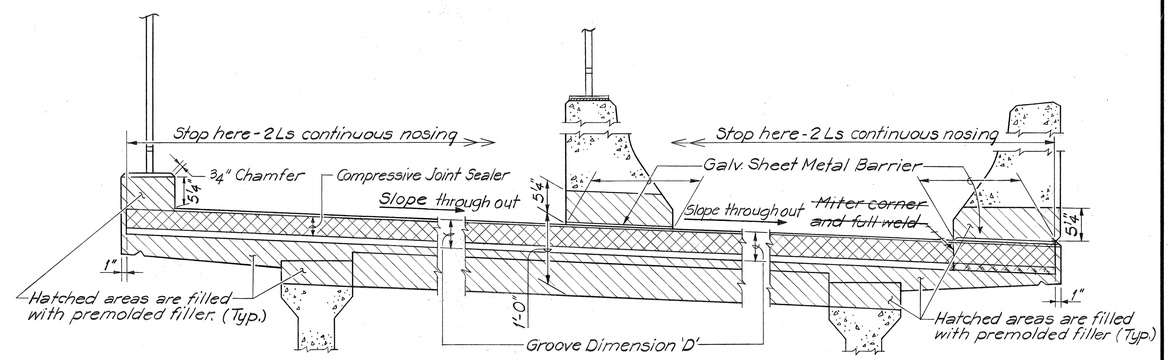

TYPICAL AT BIKEWAY RAILING | TYPICAL AT ONE-RAIL COMBINATION | TYPICAL AT STANDARD PARAPET

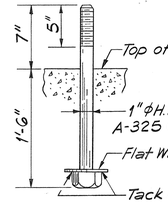

ANCHOR BOLT DETAIL
N.T.S.

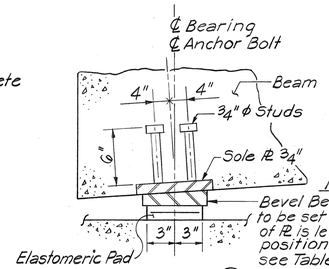

NOTE:
Bevel Bearing Plate to be set so that bottom of ℞ is level in final position. For thickness see Table on Sht. No. S-8.

SECTION (B)
N.T.S.

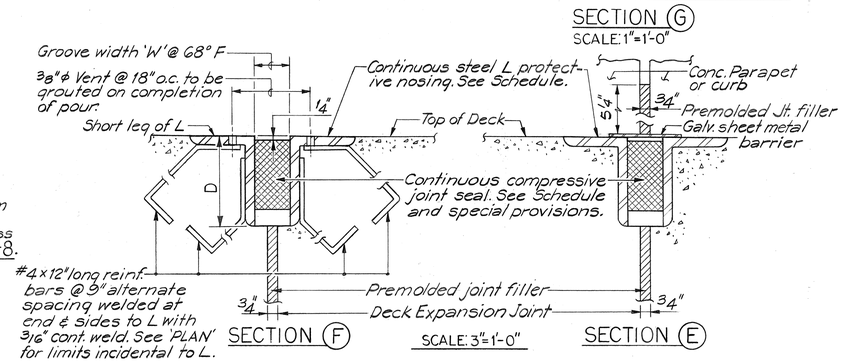

SECTION (F) | SCALE: 3"=1'-0" | SECTION (E)

SECTION (G)
SCALE: 1"=1'-0"

NOTES:

1. Bottom of Elastomeric Pad shall be secured against displacement with an adhesive approved by the Engineer.
2. All Bearing Assembly shown on 'Bearing Details' shall be hot dipped galvanized. The field weld on Bearing ℞'s shall be field galvanized.
3. Elastomeric bearing pads, anchor bolts, washers and nuts, bevel bearing ℞'s in 'Bearing Details' shall be incidental to Concrete in bridges.
4. Sole ℞'s and welded studs in 'Bearing Details' are incidental to prestressed concrete girders.
5. Compressive seals, joint filler, steel angles, sheet metal barrier and anchor bars shown on Deck Expansion details shall be incidental to concrete in bridges.

EXPANSION JOINT SEALER SCHEDULE

Joint Seal Size	Dimensions and Tolerances T	t	t_1	Steel Angle Protective Nosing	Groove Dimen. 'D'	Groove Width 'W'	Locations (N.B. and S.B.)
Type 'A'	0.1" +0.035" -0.025"	0.125" +0.046" -0.030"	0.105" +0.035" -0.025"	L3½"x3"x½"	3½"	1⅛"	N. Abut, S. Abut. Piers #2 & #3
Type 'B'	0.15" +0.045" -0.045"	—	0.2" +0.045" -0.045"	L5"x3½"x½"	5"	2⅜"	Piers #1 & #4

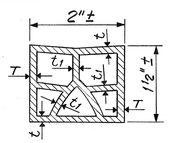

SEAL TYPE 'A'
N.T.S.

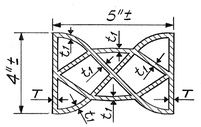

SEAL TYPE 'B'
N.T.S.

JOHN P. JOHNSON
REGISTERED PROFESSIONAL ENGINEER
No. 3647
HAWAII, U.S.A.

THIS WORK WAS PREPARED BY ME OR UNDER MY SUPERVISION.
John P. Johnson

STATE OF HAWAII
DEPARTMENT OF TRANSPORTATION
HIGHWAYS DIVISION

BEARING AND DECK JOINT DETAILS

FORT WEAVER ROAD
SOUTH OF FARRINGTON HIGHWAY
TO THE VICINITY OF RENTON ROAD
HONOULIULI STREAM BRIDGE

SCALE: AS SHOWN | DATE: SEPT 1979

SHEET No. S-12 OF S-18 SHEETS

ORIGINAL PLAN | NOTE BOOK No. | SURVEY PLOTTED BY | DRAWN BY | TRACED BY | DESIGNED BY | QUANTITIES BY | CHECKED BY | DATE

FED. ROAD DIST. NO.	STATE	FED. AID PROJ. NO.	FISCAL YEAR	SHEET NO.	TOTAL SHEETS
HAWAII	HAW.	M-7600(2)	1980	180	244

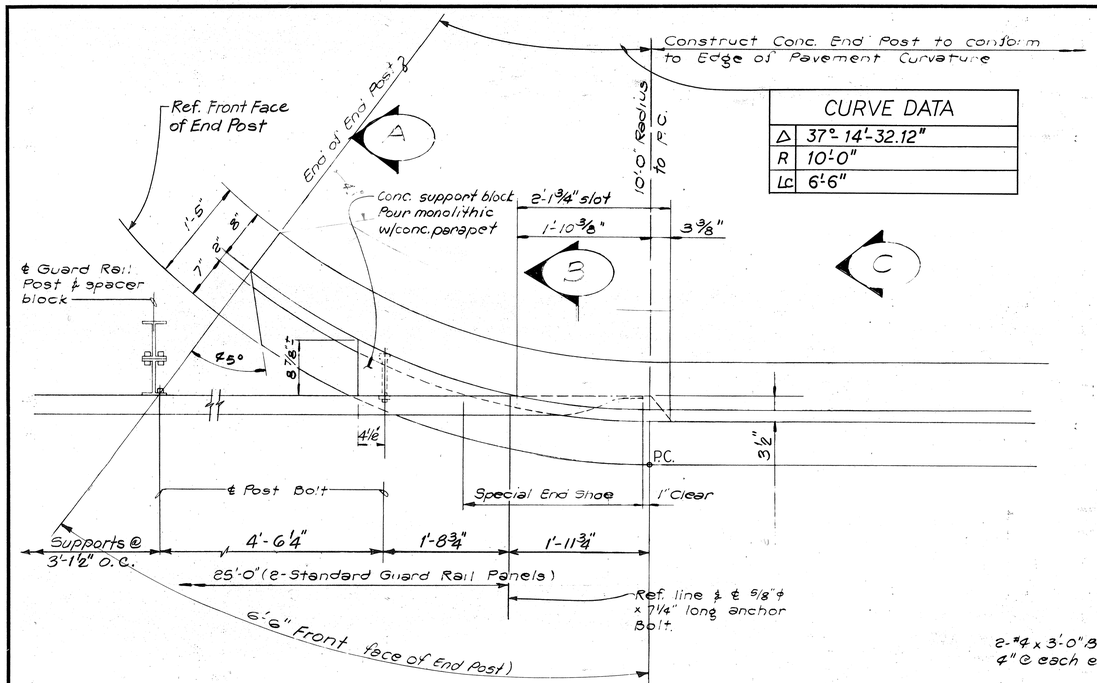

CURVE DATA	
Δ	37°-14'-32.12"
R	10'-0"
LC	6'-6"

PLAN — (Walls #N5 and #S5 only)
Scale: 1" = 1'-0"

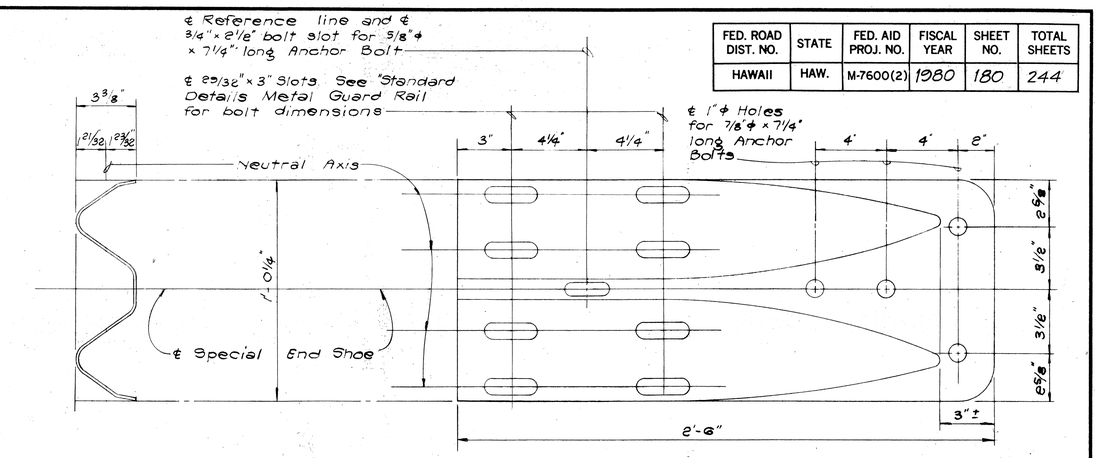

SECTION ELEVATION

SPECIAL END SHOE DETAILS
Scale: 3" = 1'-0"

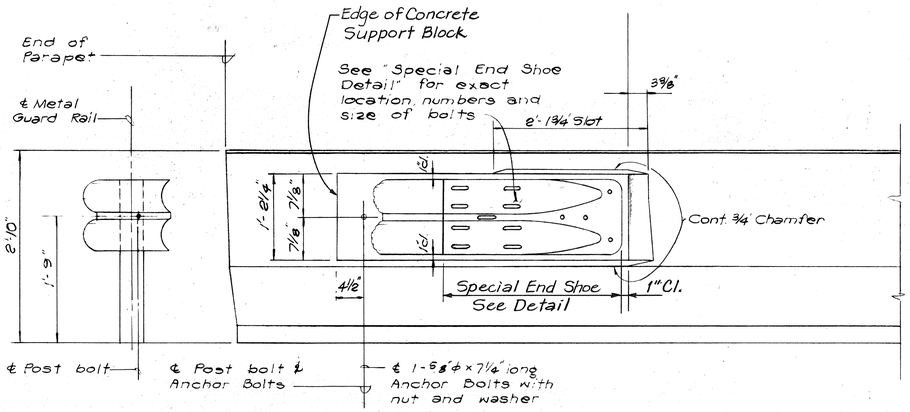

ELEVATION
Scale: 1" = 1'-0"

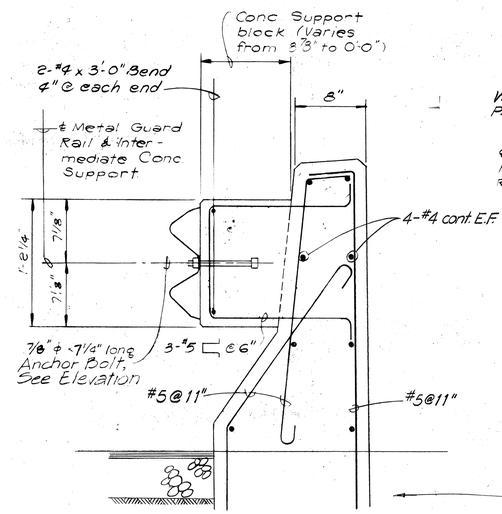

SECTION (A)
Scale: 1 1/2" = 1'-0"

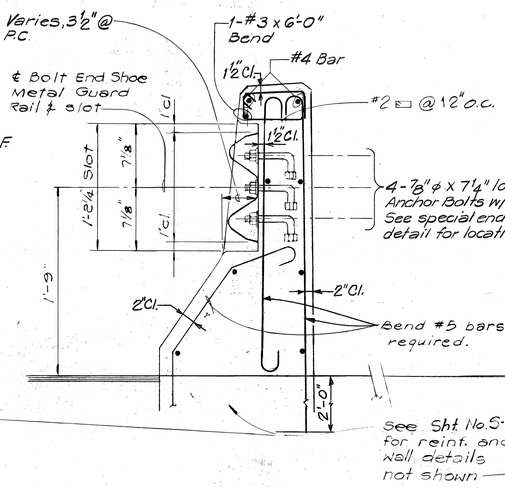

SECTION (3)
Scale: 1 1/2" = 1'-0"

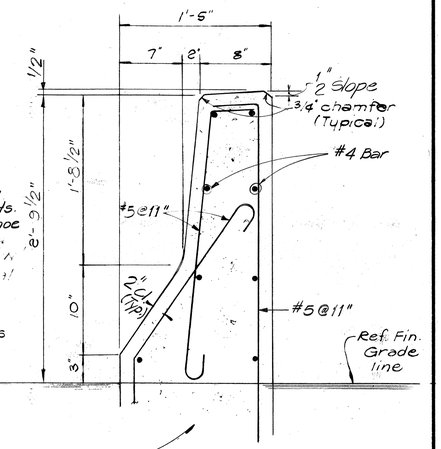

SECTION (C)
Scale: 1 1/2" = 1'-0"

NOTES:

1. All Anchor Bolts shall be High Strength bolts conforming to the requirements of ASTM A325
2. All Shoe assembly, including anchor bolts, nuts and washers shall be galvanized
3. Special End Shoe shall be fabricated from 10 gage steel conforming to the requirements of AASHO 180.
4. First 25'-0" of guard rail adjoining "Special End Shoe" shall be galvanized steel
5. Anchor Bolt length given from under bolt head
6. Front face of End Post to match front face of typical concrete parapet.
7. For End Post detail at Type II Metal Bikeway Railing, see Sheet No. S-11.

ORIGINAL PLAN	SURVEY PLOTTED BY	DATE
	DRAWN BY	
	TRACED BY	
NOTE BOOK	DESIGNED BY	
	QUANTITIES BY	
No.	CHECKED BY	

JOHN P. JOHNSON
REGISTERED PROFESSIONAL ENGINEER
No. 3647
HAWAII, U.S.A.

THIS WORK WAS PREPARED BY ME OR UNDER MY SUPERVISION.
John P. Johnson

STATE OF HAWAII
DEPARTMENT OF TRANSPORTATION
HIGHWAY VISION

TYPICAL END POST DETAIL

FORT WEAVER ROAD
SOUTH OF FARRINGTON HIGHWAY
TO THE VICINITY OF RENTON ROAD
HONOULIULI STREAM BRIDGE

SCALE: AS SHOWN DATE: SEPT 1979

SHEET NO. S-13 OF S-18 SHEETS

DATE	REVISION
7-17-81	Added Second Rebar to Concrete Guardrail. Provided Baseline Offsets for the Conc. Guardrail Taper Sections.

FED. ROAD DIST. NO.	STATE	FED. AID PROJ. NO.	FISCAL YEAR	SHEET NO.	TOTAL SHEETS
HAWAII	HAW.	M-7600 (2)	1980	181	244

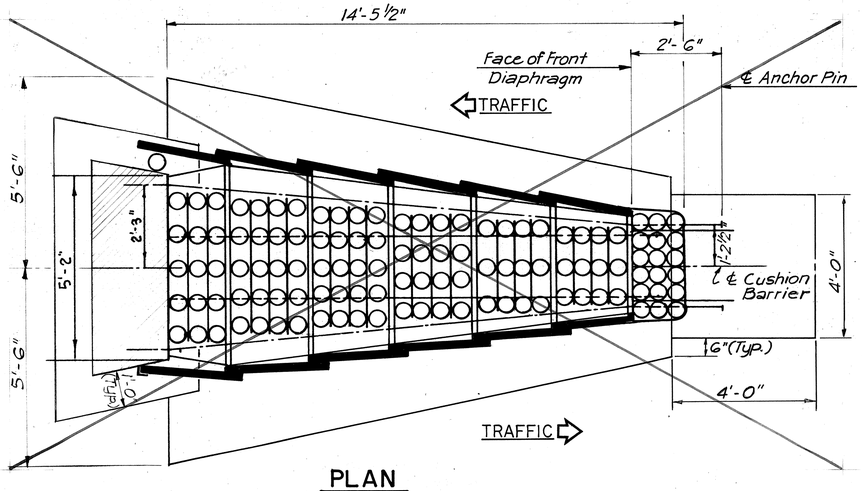

PLAN
SCALE: 1/2" = 1'-0"

NOTE: Footings and Pad for Cushion Barriers shall be of Class A Concrete (Incidental to Item "Cushion Barrier" paid in Roadway Item)

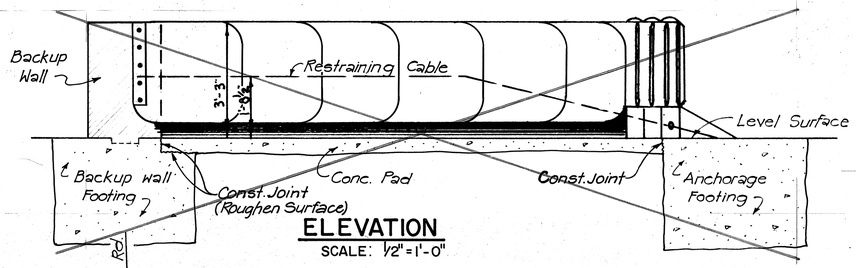

ELEVATION
SCALE: 1/2" = 1'-0"

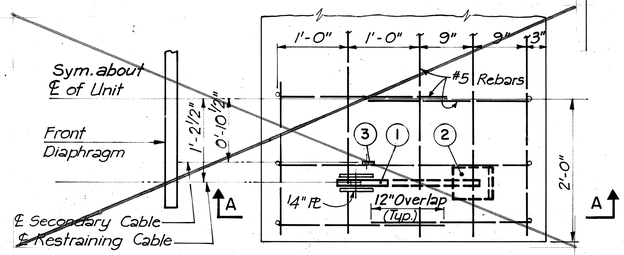

TOP VIEW
SCALE: 1" = 1'-0"

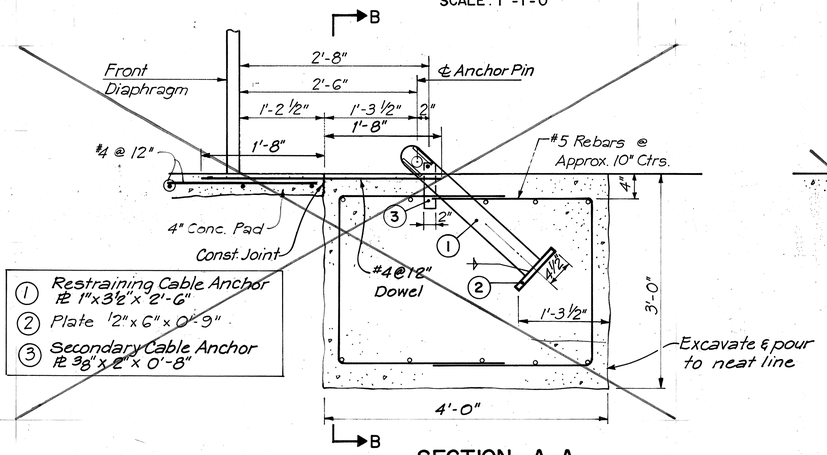

1. Restraining Cable Anchor PL 1"x3 1/2"x 2'-6"
2. Plate 1/2"x 6"x 0'-9"
3. Secondary Cable Anchor PL 3/8"x 2"x 0'-8"

SECTION A-A
SCALE: 1" = 1'-0"

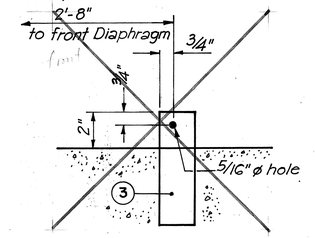

DETAIL A
SCALE: 3" = 1'-0"

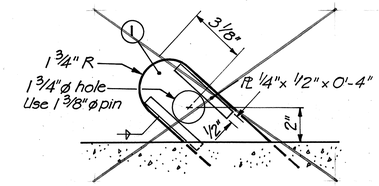

DETAIL B
SCALE: 3" = 1'-0"

NOTE: HI-DRO CUSHION ATTENUATION DEVICE WAS SUBSTITUTED WITH A FITCH INERTIAL BARRIER SYSTEM (SAND BARREL ATTENUATION DEVICE) THRU VECR. FOR DETAIL OF FITCH INERTIAL BARRIER SYSTEM SEE PLAN SHT. NO. CO 405-3

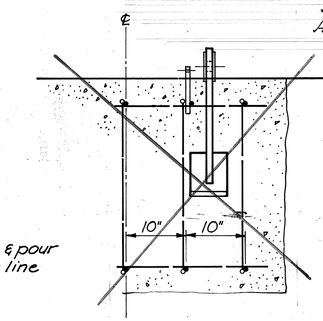

SECTION B-B
SCALE: 1" = 1'-0"

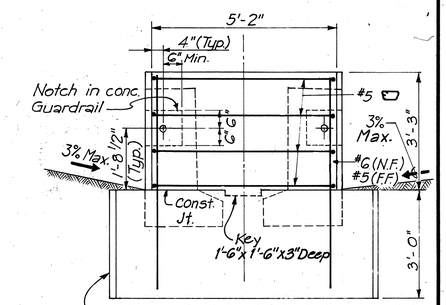

ELEVATION

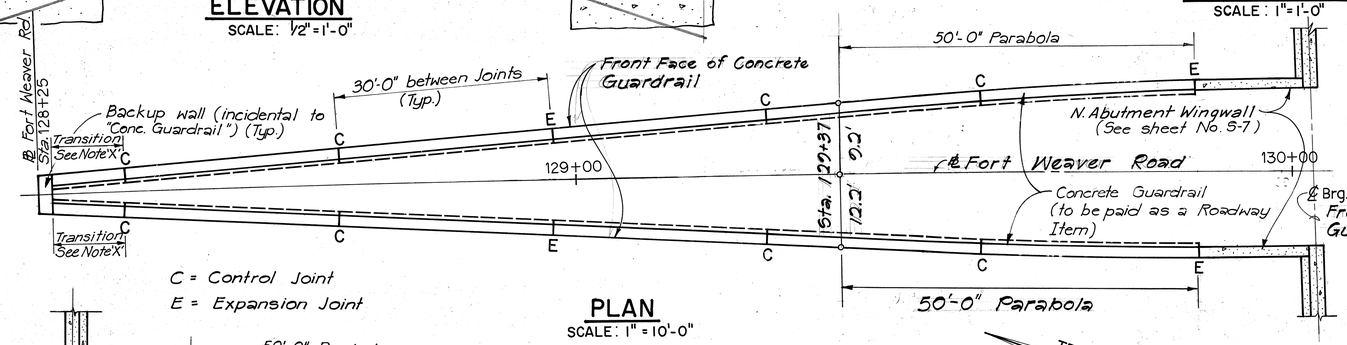

C = Control Joint
E = Expansion Joint

PLAN
SCALE: 1" = 10'-0"

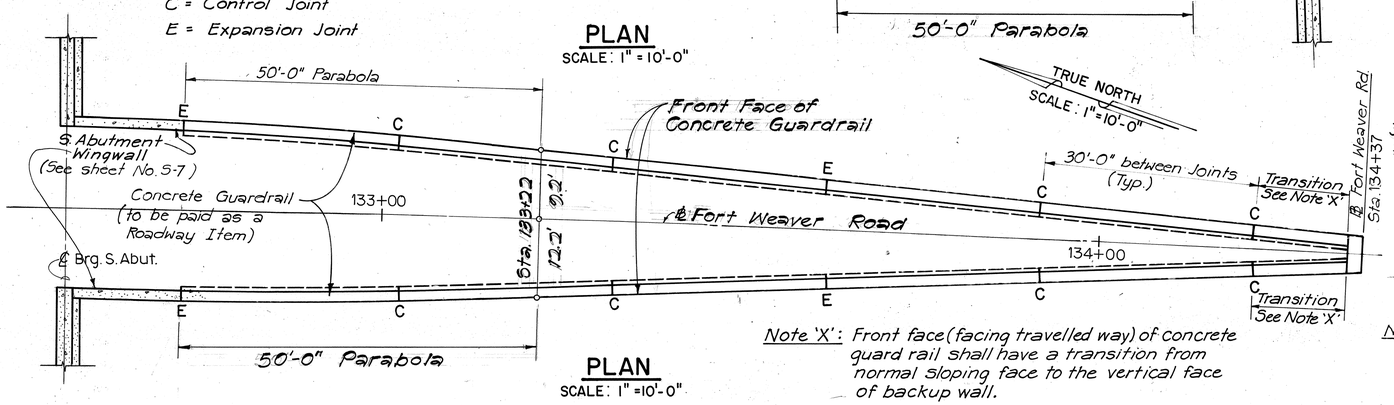

PLAN
SCALE: 1" = 10'-0"

Note 'X': Front face (facing travelled way) of concrete guard rail shall have a transition from normal sloping face to the vertical face of backup wall.

FRONT CABLE ANCHORAGE IMBEDDED TYPE A

(In lieu of the imbedded type of Cable Anchorage, Plate Type of Anchorage may be used, subject to the approval of The Engineer. Expansion bolts will not be permitted for Plate Type Anchorage.)

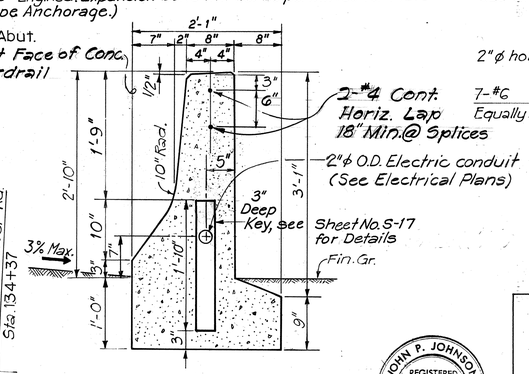

CONCRETE GUARDRAIL
SCALE: 1" = 1'-0"

NOTE: For Details of Concrete Guardrail Expansion and Control Joints, see Standard Drawing No. S-18.

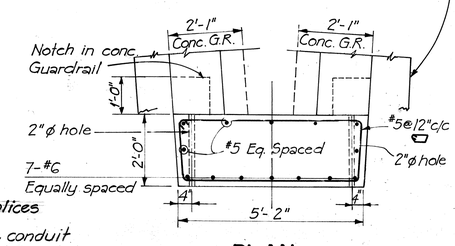

PLAN

CONCRETE BACKUP WALL
SCALE: 1/2" = 1'-0"

JOHN P. JOHNSON REGISTERED PROFESSIONAL ENGINEER No. 3647 HAWAII, U.S.A.

THIS WORK WAS PREPARED BY ME OR UNDER MY SUPERVISION.

John P. Johnson

STATE OF HAWAII
DEPARTMENT OF TRANSPORTATION
HIGHWAYS DIVISION

CONCRETE GUARD RAIL AND CUSHION BARRIER DETAILS

FORT WEAVER ROAD
SOUTH OF FARRINGTON HIGHWAY
TO THE VICINITY OF RENTON ROAD
HONOULIULI STREAM BRIDGE

SCALE: AS SHOWN DATE: SEPT 1979

SHEET No. S-14 OF S-18 SHEETS

ORIGINAL PLAN | SURVEY PLOTTED BY | DRAWN BY | TRACED BY | DESIGNED BY | QUANTITIES BY | CHECKED BY | NOTE BOOK | No. | DATE

C.0.181

FED. ROAD DIST. NO.	STATE	FED. AID PROJ. NO.	FISCAL YEAR	SHEET NO.	TOTAL SHEETS
HAWAII	HAW.	M-7600(2)	1980	182	244

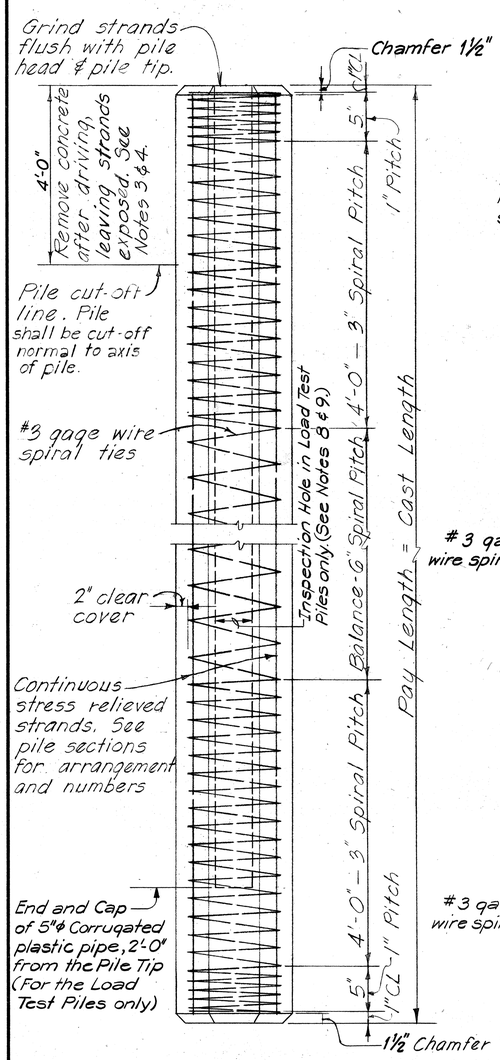

TYPICAL PILE DETAIL

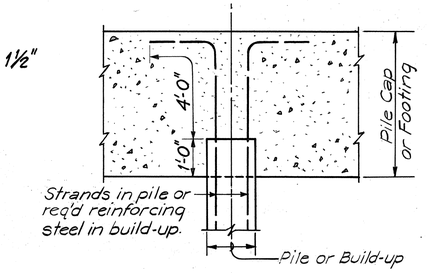

PILE REINFORCEMENT EXTENSION DETAIL
N.T.S.

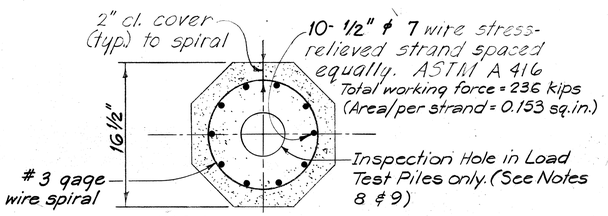

TYPICAL PILE SECTION
SCALE: 1½" = 1'-0"

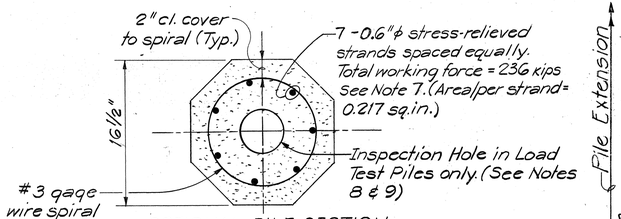

OPTIONAL PILE SECTION
SCALE: 1½" = 1'-0"

NOTE:
Pile splices and 5" φ corrugated plastic pipe for inspection holes shall be incidental to "Precast Prestressed conc. pile, Furnished" and will not be paid separately.

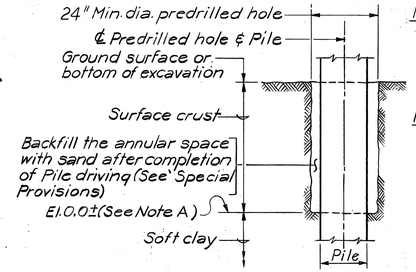

PREDRILLED HOLE DETAIL
N.T.S.

NOTE A.
Surface crust is defined as the material between the ground line, or bottom of excavation, and the uniform soft clays (without the presence of granular materials). Limit of Surface Crust to be determined by the Engineer in field.

NOTE B.
The bitumen coating shall not protrude into Footing or Pile Cap. When Pile is exposed above ground, as in the case of certain Pile bents, the bitumen coating shall be up to the finished grade (or stream bed) only. ~~If the Pile tip ends higher than the estimated Pile tip elevation the Contractor shall remove the bitumen coating from the Pile head that is to be embedded into the Footing (or Pile cap), or the portion above the finished grade, as applicable. Removal of the bitumen coating shall be incidental to pile driving.~~

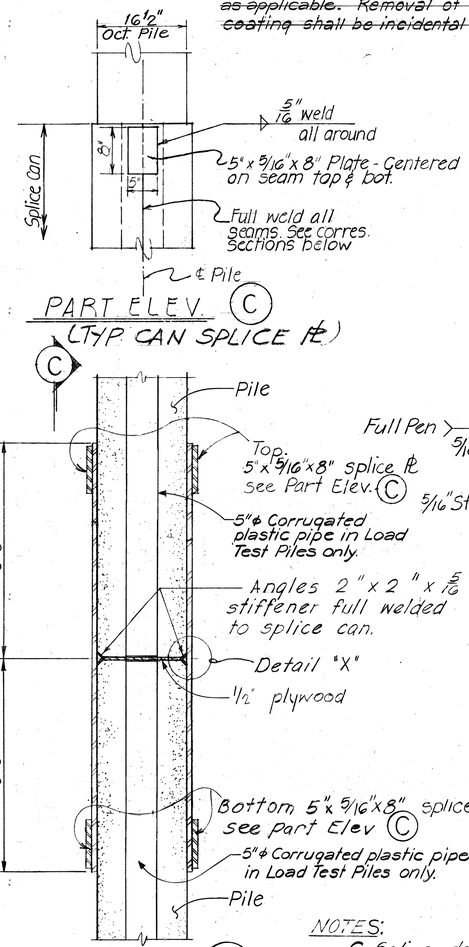

PART ELEV. C
(TYP. CAN SPLICE PL)

SECTION B

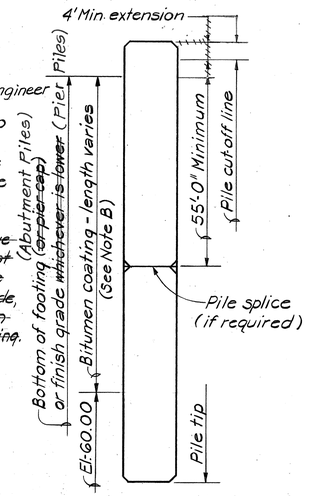

PILE ARRANGEMENT
N.T.S.

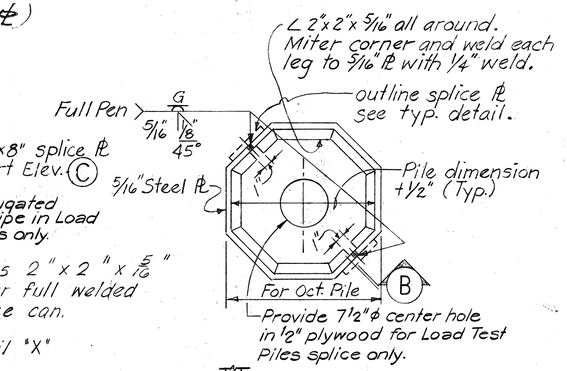

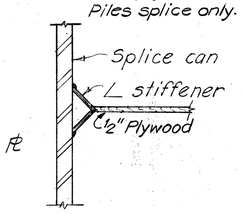

DETAIL "X"

PILE NOTES:

1. Concrete in prestressed concrete pile shall have f'c = 6,000 psi cylinder strength at 28 days. Release strength = 4,000 psi.
2. Prestressing strands shall be 7 wire stress-relieved strands with an ultimate strength of 270 ksi. Diameter of strands shall be as shown on the 'Typical Pile Section'. Total loss due to creep, shrinkage, elastic shortening and relaxation of steel = 37,000 psi. Total working force shown on 'Typical Pile Section' is the net force after all losses.
3. Work of cutting off prestressed concrete piles or concrete build-ups shall be performed in such a manner as to avoid spalling or damaging the pile below cut-off. In case of such damage, the pile shall be replaced or repaired by the Contractor at his own expense as directed by the Engineer.
4. Portion of pile embedded into footing shall be of sound concrete. Damaged portions shall be removed and pile cut-off elevation lowered as required by the Engineer.
5. Non-prestressed steel in build-ups shall be ASTM A615 Grade 60. Spiral ties shall be cold drawn ASTM A82.
6. Concrete in Pile Build-up Type A shall have f'c = 5000 psi Cylinder strength at 28 days. Concrete in Pile Build-up Type B shall have f'c = 3000 psi cylinder strength at 28 days.
7. In lieu of the 7 wire ½" dia. stress-relieved steel strands (area 0.153 in²) with an ultimate strength of 270 ksi. the Contractor at his option may use 7 wire 0.6" dia. stress-relieved steel strands (area 0.217 in²) with an ultimate strength of 270 ksi. For properties of 0.6" dia. strand see special provisions. However the final prestress force as stated shall not be revised.
8. Inspection holes in Load Test Piles shall have a 5"φ corrugated plastic pipe cast in the center of the Pile. The Pipe shall have a radial tolerance of ⅛" off-set from center of Pile except that within 3 feet of the ends of Pile segments the radial tolerance shall be 1/16" off-set from the center of the Pile. The allowable deviation from straight for the pipe is ⅛" in any 10 ft of length.
9. The 5"φ corrugated plastic pipe shall be similar or equal, as determined by the Engineer, to the corrugated plastic drainage tubing manufactured by "Advance Drainage Systems" and shall have a wall thickness of 0.05 inches, 5.73 inches O.D. on outside of corrugation and 5.07 inches O.D. on inside of corrugation, and a pitch of 0.7 inches. The pipe shall be made in straight lengths, not coiled, of 10 feet each and be non-perforated. (See "SECTION B")

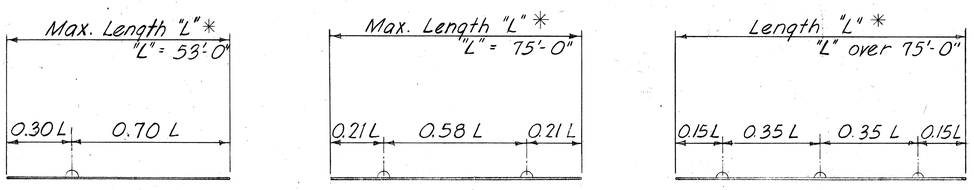

* The length "L" is the distance end to end of pile.

1 POINT PICK-UP 2 POINT PICK-UP 3 POINT PICK-UP

NOTE: Unless special lifting devices are attached for pick-up points, pick-up points shall be plainly marked on all piles after removal of the forms and all lifting shall be done at these points.
The use of special embedded or attached lifting devices, the employment of other pick-up points or any other method of pick-up shall be subject to approval by the Engineer.

NOTES:
C. Splice detail shown above shall not be used except for pile length in excess of 100'-0" long.
D. Structural steel for splice can shall be ASTM A36.

NOTE: All welding shall conform to the Specifications for "Welded Highway and Railway Bridges" of the American Welding Society.

TYPICAL PILE SPLICE DETAILS
(FOR PRESTRESSED-CONCRETE PILES WHEN CAST IN TWO OR MORE SECTIONS)

JOHN P. JOHNSON
REGISTERED PROFESSIONAL ENGINEER
No. 3647
HAWAII, U.S.A.

THIS WORK WAS PREPARED BY ME OR UNDER MY SUPERVISION.
John P. Johnson

STATE OF HAWAII
DEPARTMENT OF TRANSPORTATION
HIGHWAYS DIVISION

PRESTRESSED CONCRETE
PILE DETAILS-SHEET 1 OF 2

FORT WEAVER ROAD
SOUTH OF FARRINGTON HIGHWAY
TO THE VICINITY OF RENTON ROAD
HONOULIULI STREAM BRIDGE

SCALE: AS SHOWN DATE: SEPT 1979
SHEET No. S-15 OF S-18 SHEETS

ORIGINAL PLAN | SURVEY PLOTTED BY | DRAWN BY | TRACED BY | DESIGNED BY | QUANTITIES BY | CHECKED BY | DATE | NOTE BOOK No.

PRINTED ON NO. 1000H CLEARPRINT

FED. ROAD DIST. NO.	STATE	FED. AID PROJ. NO.	FISCAL YEAR	SHEET NO.	TOTAL SHEETS
HAWAII	HAW.	M-7600 (2)	1980	183	244

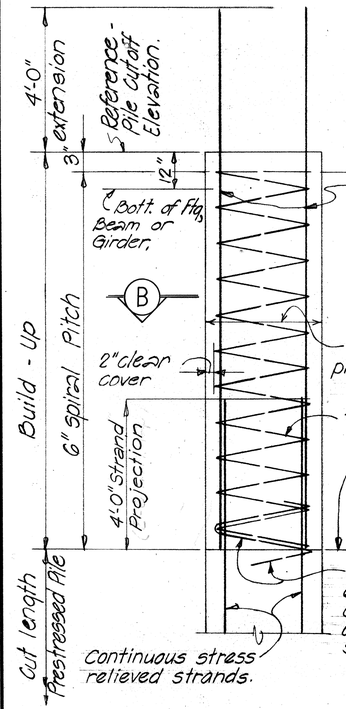

TYPE A

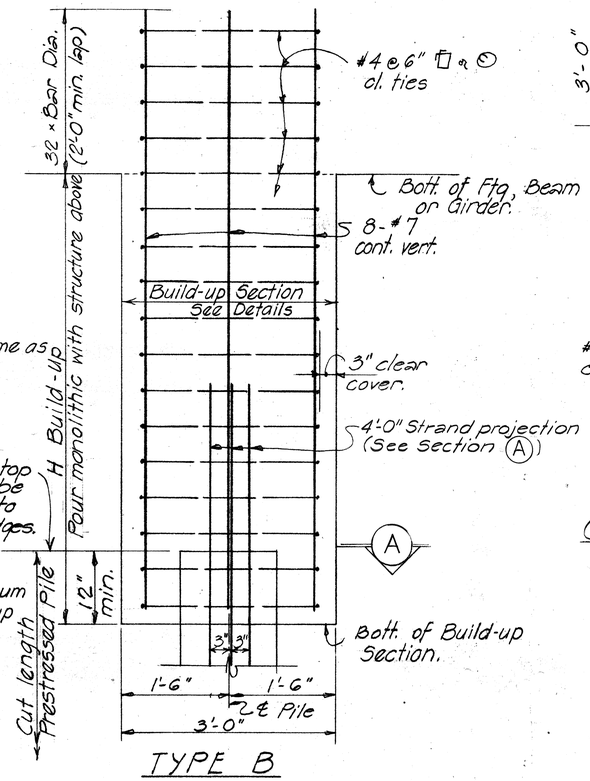

TYPE B

Notes:

Selection of pile build-up type without driving to be determined by the Engineer.

When height of depressed portion of footing (H) exceeds 4', the depressed section shall be poured separately from the main body of the footing.

Depressed portion of footing may be omitted for pile heads embedded at least 4" into footing provided at least 90% of the piles in each footing have the minimum embedment into footing as shown in contract plans.

WITHOUT DRIVING
TYPICAL PILE BUILD-UP DETAILS

N.T.S.

(For Pile Notes see Sheet No. S-15)

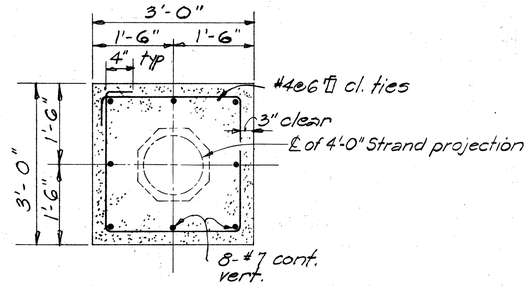

SQUARE BUILD-UP

Note:
Circular section may be used instead of square section if approved by the Engineer.

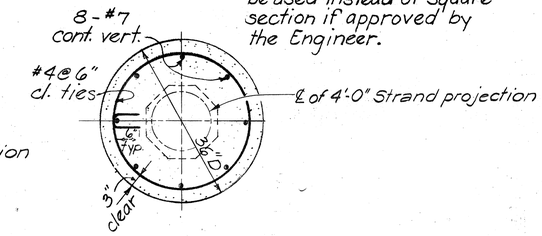

CIRCULAR BUILD-UP

SECTION (A)

SCALE: 3/4" = 1'-0"

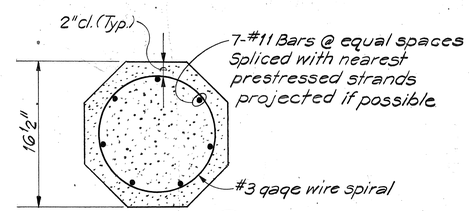

SECTION (B)

SCALE: 1 1/2" = 1'-0"

4'-0" unless otherwise directed by the Engineer. Remove concrete after driving, leaving reinf. exposed

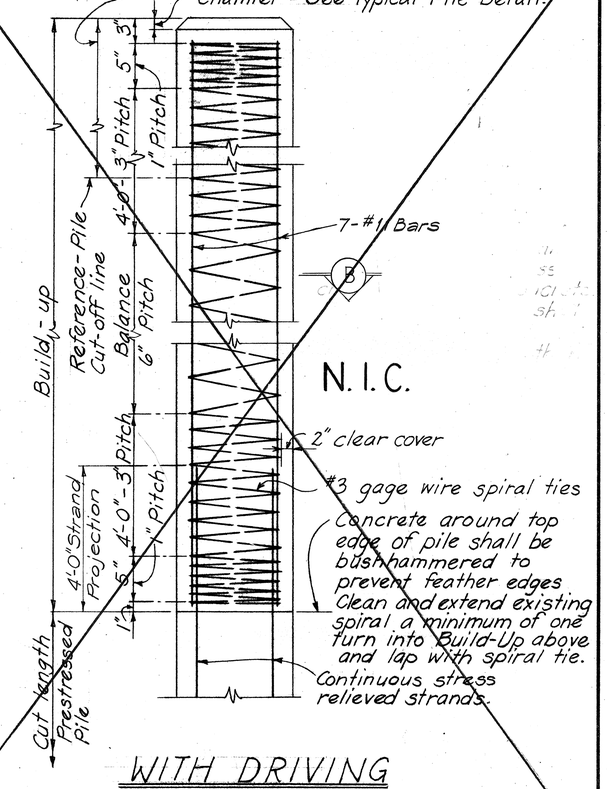

WITH DRIVING
TYPICAL PILE BUILD-UP DETAIL

N.T.S.

NO.	REVISION	APPROVED BY	DATE

JOHN P. JOHNSON
REGISTERED PROFESSIONAL ENGINEER
No. 3647
HAWAII, U.S.A.

THIS WORK WAS PREPARED BY ME OR UNDER MY SUPERVISION.

John P. Johnson

STATE OF HAWAII
DEPARTMENT OF TRANSPORTATION
HIGHWAYS DIVISION

PRESTRESSED CONCRETE PILE DETAILS-SHEET 2 OF 2

FORT WEAVER ROAD
SOUTH OF FARRINGTON HIGHWAY
TO THE VICINITY OF RENTON ROAD
HONOULIULI STREAM BRIDGE

SCALE: AS SHOWN DATE: SEPT 1979

SHEET No. S-16 OF S-18 SHEETS

ORIGINAL PLAN | SURVEY PLOTTED BY | DRAWN BY | TRACED BY | DESIGNED BY | QUANTITIES BY | CHECKED BY | DATE | NOTE BOOK No.

PRINTED ON NO. 1000H CLEARPRINT

183

FED. ROAD DIST. NO.	STATE	FED. AID PROJ. NO.	FISCAL YEAR	SHEET NO.	TOTAL SHEETS
HAWAII	HAW.	M-7600(2)	1980	184	244

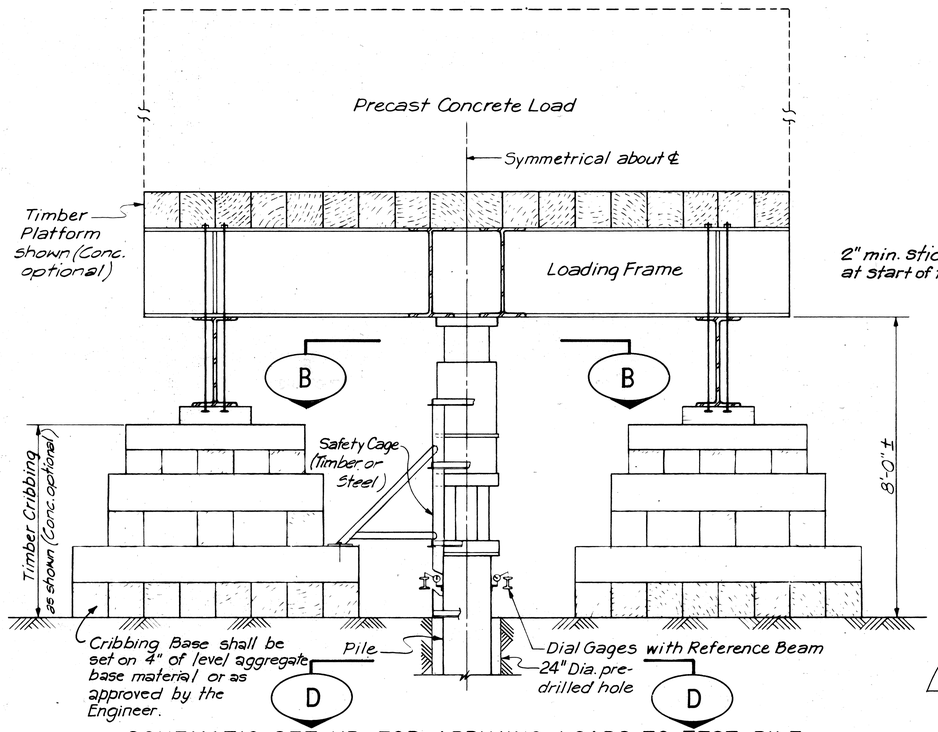

SCHEMATIC SET-UP FOR APPLYING LOADS TO TEST PILE

SCALE: 1/2" = 1'-0"

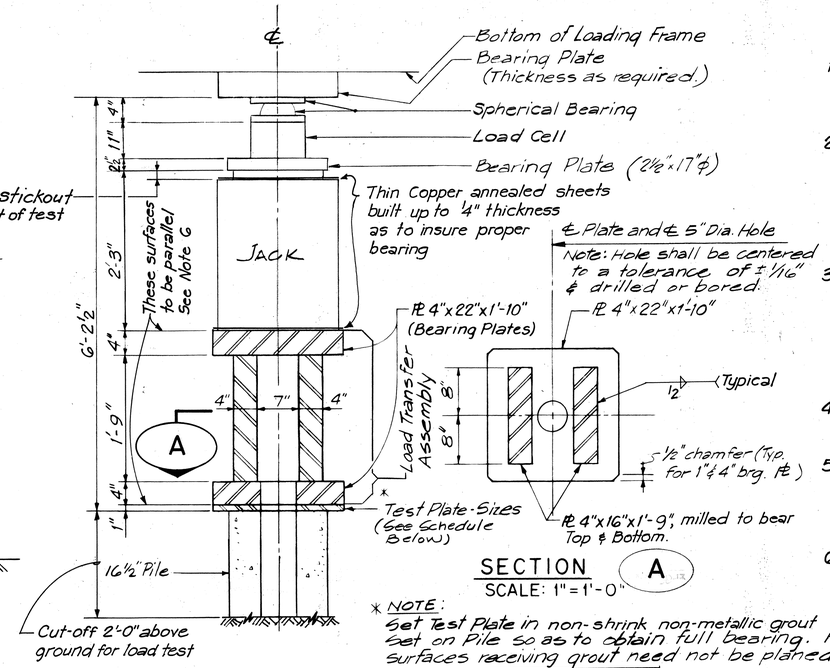

SECTION A

SCALE: 1" = 1'-0"

* NOTE: Set Test Plate in non-shrink non-metallic grout set on Pile so as to obtain full bearing. Plate surfaces receiving grout need not be planed.

DETAIL FOR JACKING SET-UP

Not to Scale

Schedule Test Plate-Sizes		
Pile Size	Plate Size	Hole Size
16½"	1"x18"x1'-6"	5" ϕ

LOAD FRAME NOTES:

1. The Loading Frame shall be designed to support load required to permit the Test Pile to be loaded to 450 Tons. Loading blocks to be provided by Contractor.
2. Design of Frame shall conform to the latest Edition of the Manual of Steel Construction by the American Institute of Steel Construction. Allowable stresses in this manual may be increased by 20% for main structural members. This increase in allowable stresses will not be allowed for Connections, Bolts and Welds.
3. At the option of the Contractor, the Loading Frame may be fabricated from new or used structural steel shapes; or loading frames previously used in other projects may be used provided the design and construction of the frame to be furnished conforms to the requirements in Notes 1 and 2 above.
4. Timber Cribbing shall have a soil bearing area of not less than 240 square feet at each side of loading Jack.
5. Timber Cribbing and Platform may be of new or used sound timber and shall be of adequate size and grade to safely carry the loads imposed upon them resulting from the Load Tests.
6. Surfaces of all bearing plates shall be planed or milled smooth to provide full surface contact, Top & Bottom of Load Transfer Assembly to be planed after welding.

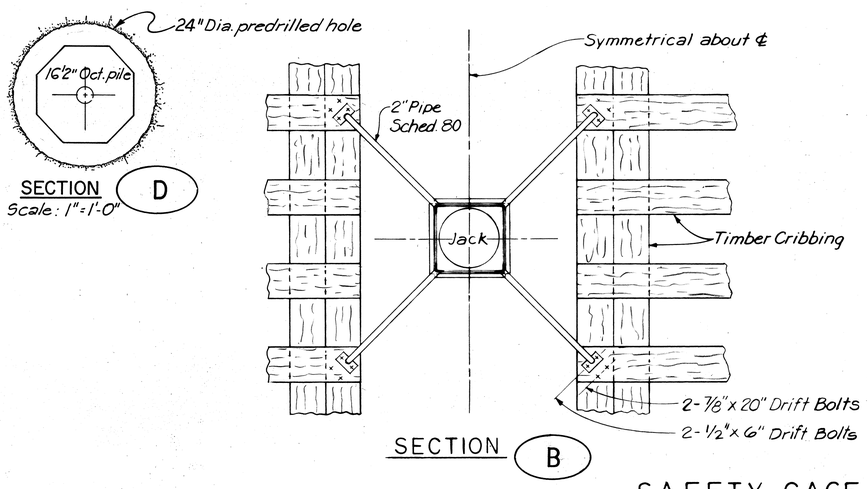

SAFETY CAGE DETAIL

Scale: 1" = 1'-0"

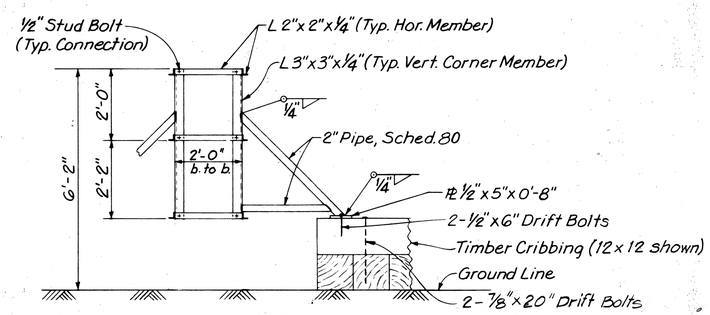

TYPICAL ELEVATION

ORIGINAL PLAN	SURVEY PLOTTED BY	DATE
	DRAWN BY	
	TRACED BY	
NOTE BOOK	DESIGNED BY	
	QUANTITIES BY	
No.	CHECKED BY	

JOHN P. JOHNSON REGISTERED PROFESSIONAL ENGINEER No. 3647 HAWAII, U.S.A.

THIS WORK WAS PREPARED BY ME OR UNDER MY SUPERVISION.

John P. Johnson

STATE OF HAWAII
DEPARTMENT OF TRANSPORTATION
HIGHWAYS DIVISION

LOAD TEST SET-UP

FORT WEAVER ROAD
SOUTH OF FARRINGTON HIGHWAY
TO THE VICINITY OF RENTON ROAD
HONOULIULI STREAM BRIDGE

SCALE: AS SHOWN DATE: SEPT 1979

SHEET No. S-17 OF S-18 SHEETS

FED. ROAD DIST. NO.	STATE	FED. AID PROJ. NO.	FISCAL YEAR	SHEET NO.	TOTAL SHEETS
HAWAII	HAW.	M-7600(2)	1981	C.O.185	244

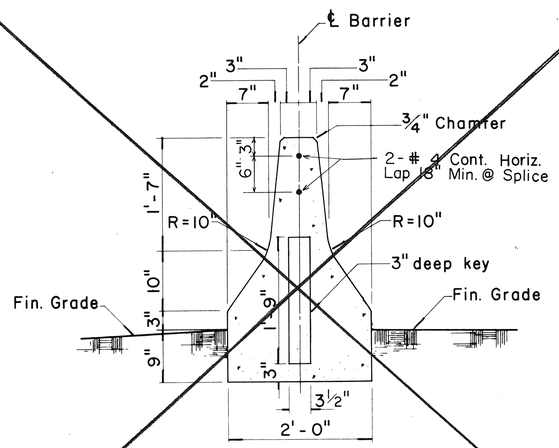

TYPE 4A

Scale: 1" = 1'-0"

N. I. C.

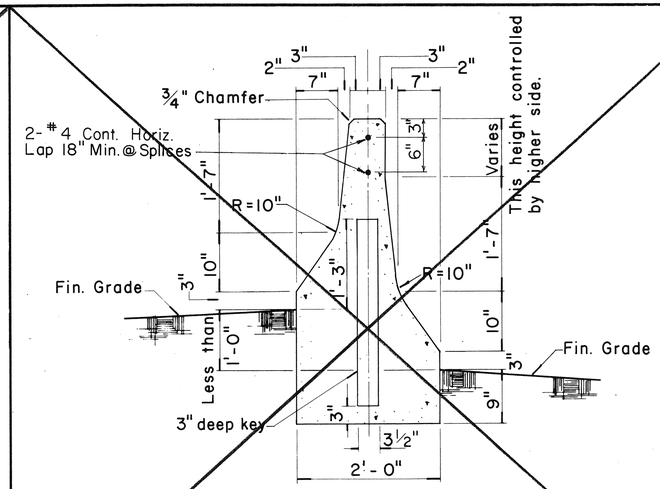

TYPE 4B

Scale: 1" = 1'-0"

N. I. C.

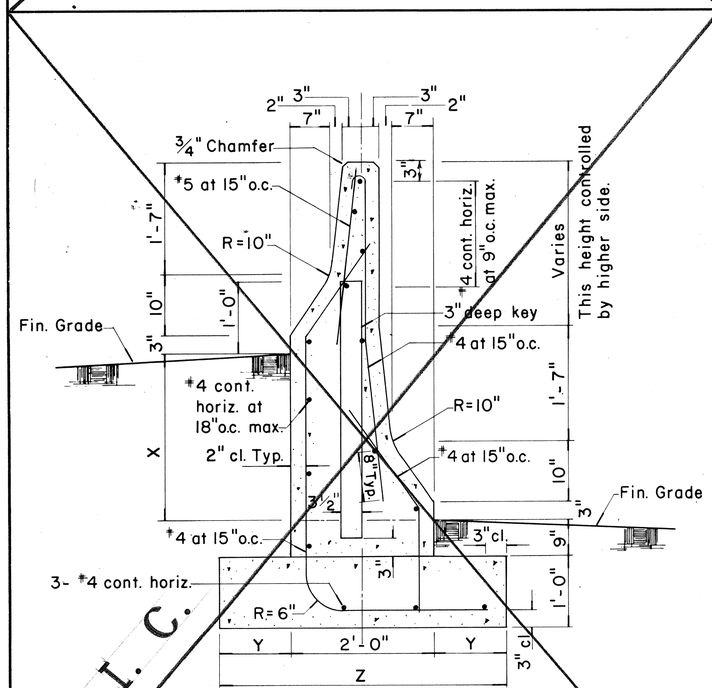

N. I. C.

TYPE 4C & TYPE 4D

Scale: 1" = 1'-0"

TYPE	DIFFERENCE IN FIN. GRADE	FOOTING	
	X	Y	Z
4C	1'-0" min., 2'-4" max.	1'-0"	4'-0"
4D	Greater than 2'-4", 4'-4" max.	1'-3"	4'-6"

NOTE:

Except where noted all dimensions shall be the same for Type 4C and Type 4D.

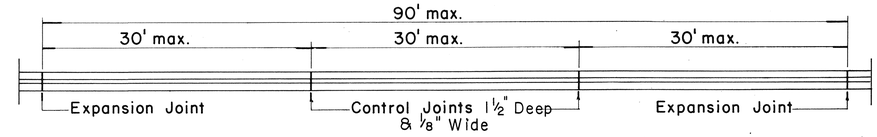

PLAN

Scale: ⅛" = 1'-0"

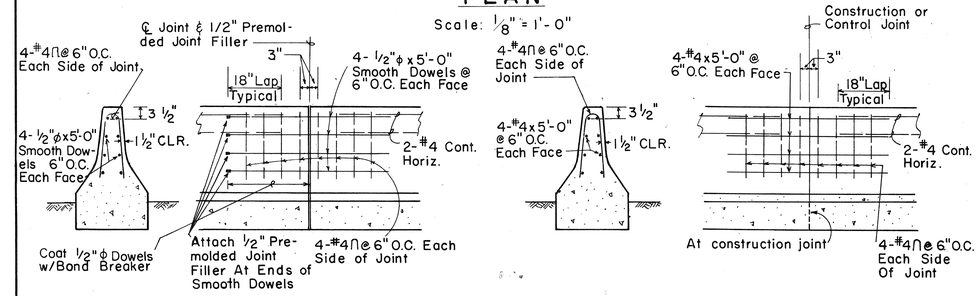

SECTION ELEVATION

EXPANSION JOINT DETAIL

SCALE: 1/2" = 1'-0"

SECTION ELEVATION

CONSTRUCTION & CONTROL JOINT DETAIL

SCALE: 1/2" = 1'-0"

NOTE: 1/2" PREMOLDED JOINT FILLER IS NOT REQUIRED AT CONSTRUCTION JOINTS.

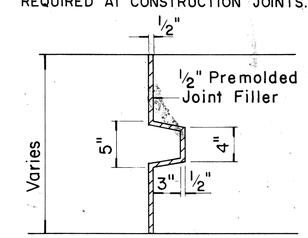

SECTION THRU KEY AT EXPANSION JOINT

Scale: 1½" = 1'-0"

GENERAL NOTES

1. Precast Rigid Barrier Guard Rail may be installed as an option to cast-in-place Type 4 Rigid Barrier Guard Rail. Contractor shall submit shop drawings to Engineer for approval.
2. Expansion Joints shall be constructed at ninety-foot (90 ft.) maximum intervals and at existing expansion joints of structures. (Use ½" premolded joint filler, incidental to - Type 4 Rigid Barrier Guard Rail). Control Joints shall be placed between expansion joints at 30' maximum. Shear keys shall be required at all construction joints.
3. The exterior surface and vertical alignment of the Type 4 Rigid Barrier Guard Rail shall be constructed to give a uniform and presentable appearance. Variation of more than ¼" in 20' max. and ½" in 40' or more will be considered objectionable. The Engineer will determine the acceptability of the work.
   During the course of the work, samples may be tested and measurements made to establish whether or not the specified values or dimensions are being met. If the specified values or dimensions are not being met, the Engineer will determine the degree of the non-conformance, the effect on the serviceability of the project, whether the work be accepted and remain in place and, if so, the amount to be paid for such work, or whether the work shall be removed and replaced or otherwise corrected at the Contractor's expense.

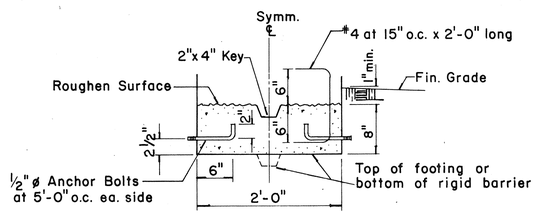

OPTIONAL CONSTRUCTION JOINT DETAILS

Scale: 1" = 1'-0"

NOTE:

The intent of the optional construction joint details for the Type 4 Rigid Barrier Guard Rail is to provide a method of securing the forms and preventing uplift so that the barrier will have a uniform and presentable appearance.
The Contractor may submit an alternate method of constructing the barrier for the approval of the Engineer and for use on a trial basis. Any unsatisfactory work shall be removed or corrected as directed by the Engineer and at the Contractor's expense.

DATE	REVISION
7-17-81	Replaces Superseded Standard Detail, DT-521

NO.	REVISION	APPROVED BY	DATE
1	Supersede Sht. DT 521 Approved 2-10-72	RHL	1/21/81

APPROVAL RECOMMENDED:
Eichi Tanaka — 1/20/81
TRAFFIC ENGINEER — DATE

APPROVED:
Richard K. Sakaishi — 1/21/81
ASSISTANT CHIEF, ENGINEERING — DATE

STATE OF HAWAII
DEPARTMENT OF TRANSPORTATION
HIGHWAYS DIVISION

STANDARD DETAILS

GUARD RAIL TYPE 4 (RIGID BARRIER)

Scale: As Shown

SHEET No. S-18 OF S-18 SHEETS | DT 521

C.O. 185

ORIGINAL PLAN	SURVEY PLOTTED BY	DATE
	DRAWN BY	
	TRACED BY	
	DESIGNED BY	
NOTE BOOK	QUANTITIES BY	
No.	CHECKED BY	