FED. ROAD DIST. NO.	STATE	FED. AID PROJ. NO.	FISCAL YEAR	SHEET NO.	TOTAL SHEETS
HAWAII	HAW.	NH-072-1(47)	1999	25S-1	89

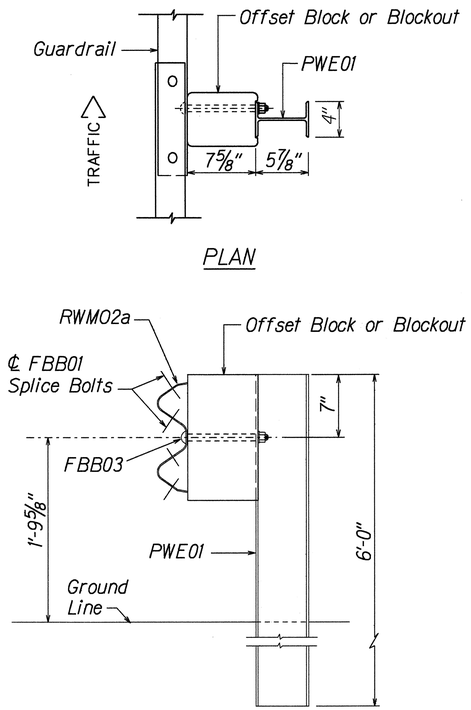

STRONG POST W-BEAM GUARDRAIL (SGR04a)

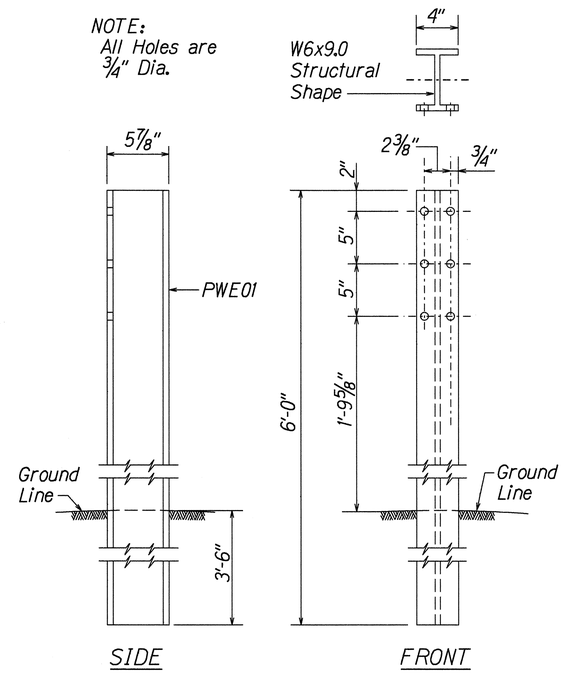

W-BEAM STRONG POST (PWE01)

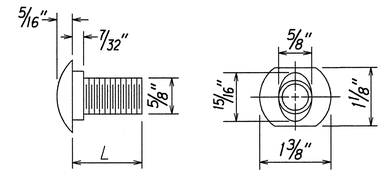

DESIGNATOR	L
FBB01	1 3/8"
FBB02	2"
FBB03	10"

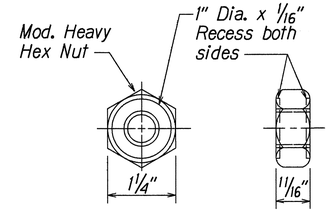

GUARDRAIL BOLTS AND RECESSED NUT

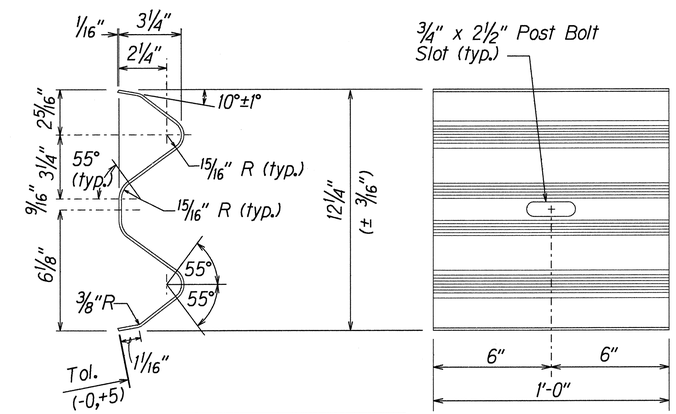

DESIGNATOR	BASE METAL THICKNESS
RWB01b	17/128"

W-BEAM BACK-UP-PLATE (RWB01b)

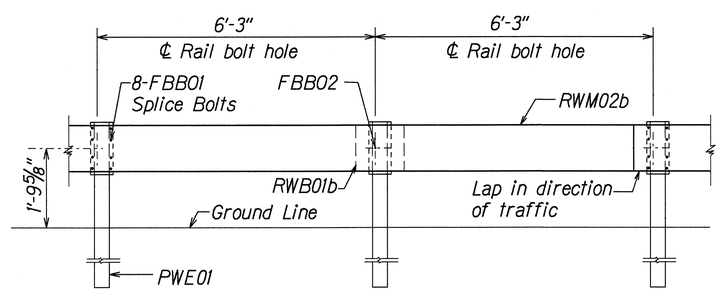

ELEVATION

STRONG POST W-BEAM GUARDRAIL WITH RECYCLED OFFSET BLOCK OR PLASTIC BLOCKOUT

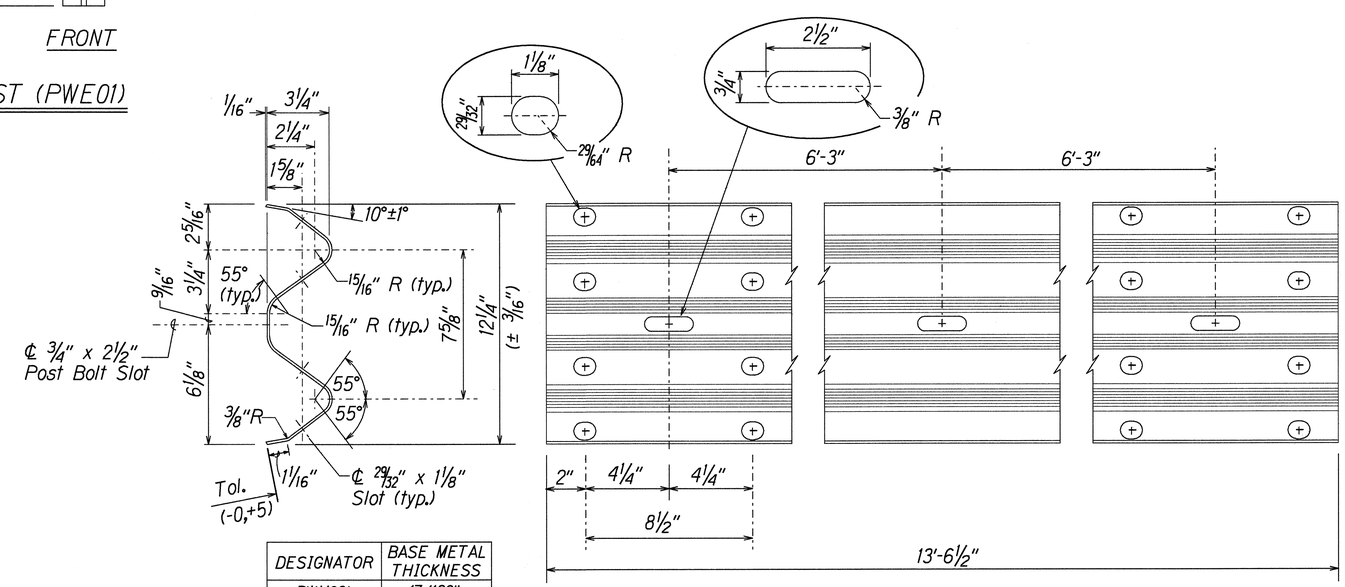

DESIGNATOR	BASE METAL THICKNESS
RWM02b	17/128"

2 SPACE W-BEAM GUARDRAIL (RWM02b)

ORIGINAL PLAN	SURVEY PLOTTED BY	DATE
	DRAWN BY X	
	TRACED BY X	
NOTE BOOK	DESIGNED BY X	
	QUANTITIES BY	
No.	CHECKED BY	

r3/01/99 fdtrdbr/guardrail/wbeamstudgn (standard plan TE-50 r03/06/87)

STATE OF HAWAII
DEPARTMENT OF TRANSPORTATION
HIGHWAYS DIVISION

STRONG POST W-BEAM GUARDRAIL

KALANIANAOLE HIGHWAY RESURFACING
Ainakoa Avenue to West Hind Drive
Federal-Aid Project No. NH-072-1(47)

Scale: NTS Date: Aug., 1999

SHEET No. 1 OF 2 SHEETS

25S-1