FED. ROAD DIST. NO.	STATE	PROJ. NO.	FISCAL YEAR	SHEET NO.	TOTAL SHEETS
HAWAII	HAW.	72A-01-96M	1996	44	55

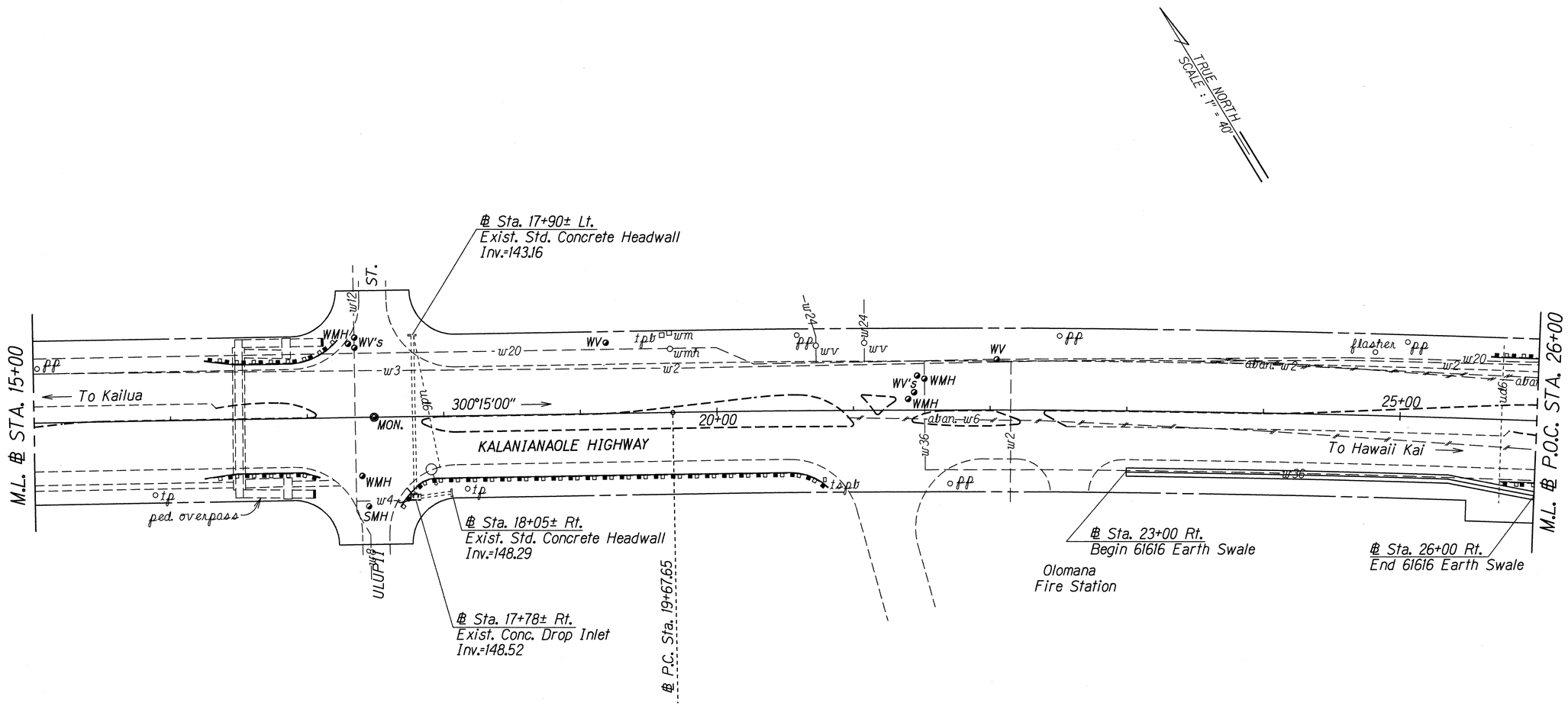

℄ Sta. 17+78± Rt.
Construct: Concrete Pad
(For Details see Sht. No. H12A)
Estimated Quantities
Class A Concrete = 1 C.Y.

℄ Sta. 23+00 Rt. to ℄ Sta. 26+00 Rt.
Construct: 61616 Earth Swale
(For Detail see Sht. No. H12J)
Estimated Quantities
Ditch and Channel Excavation = 17 C.Y.

DATE	REVISION
9/13/96	Class B Concrete changed to Class A.
6/14/96	Notes added to clarify plans.

STATE OF HAWAII
DEPARTMENT OF TRANSPORTATION
HIGHWAYS DIVISION

DRAINAGE PLAN

KALANIANAOLE HIGHWAY RESURFACING
Kailua Rd. to Hilu St.
Project No. 72A-01-96M

Scale: 1"=40' Date: May 1996

SHEET No. H1 OF 12 SHEETS

ORIGINAL PLAN
SURVEY PLOTTED BY
DRAWN BY Al Nomura DATE 5/20/96
TRACED BY
DESIGNED BY R. Sakamoto
NOTE BOOK
QUANTITIES BY
CHECKED BY

C.O. ADD. 44

FED. ROAD DIST. NO.	STATE	PROJ. NO.	FISCAL YEAR	SHEET NO.	TOTAL SHEETS
HAWAII	HAW.	72A-01-96M	1996	45	55

℄ Sta. 30+40±
Construct: Type "X" C.B.
(For Details see Sht. No. H12B)
Estimated Quantities
Type "X" Catch Basin = 1 Ea.

℄ Sta. 32+71± Lt.
Remove and Dispose: Existing Metal Cover
Install: Type A-8 Frame and Grates
(For Details see Sht. No. H12C)
Estimated Quantities
Type A-8 Frame and Grates = 1 Ea.

℄ Sta. 34+40 Lt.
Construct: Std. Concrete Headwall
(For Details see Std. Plan Sht. H-16)
Earth Ditch
Remove: 10' existing CMP
Place: Dumped Riprap
(For Detail see Sht. No. H12E)
Estimated Quantities

Structure Excavation for Drainage System	= 6 C.Y.
Ditch and Channel Excavation	= 17 C.Y.
Class A Concrete	= 2 C.Y.
Reinforcing Steel	= 43 Lb.
Dumped Riprap	= 45 C.Y.

℄ Sta. 35+10 Lt.
Remove and Dispose: Existing Metal Cover
Install: Type A-15 Frame and Grate
(For Details see Sht. No. H12D)
Estimated Quantities
Type A-15 Frame and Grate = 1 Ea.

TRUE NORTH
SCALE : 1" = 40'

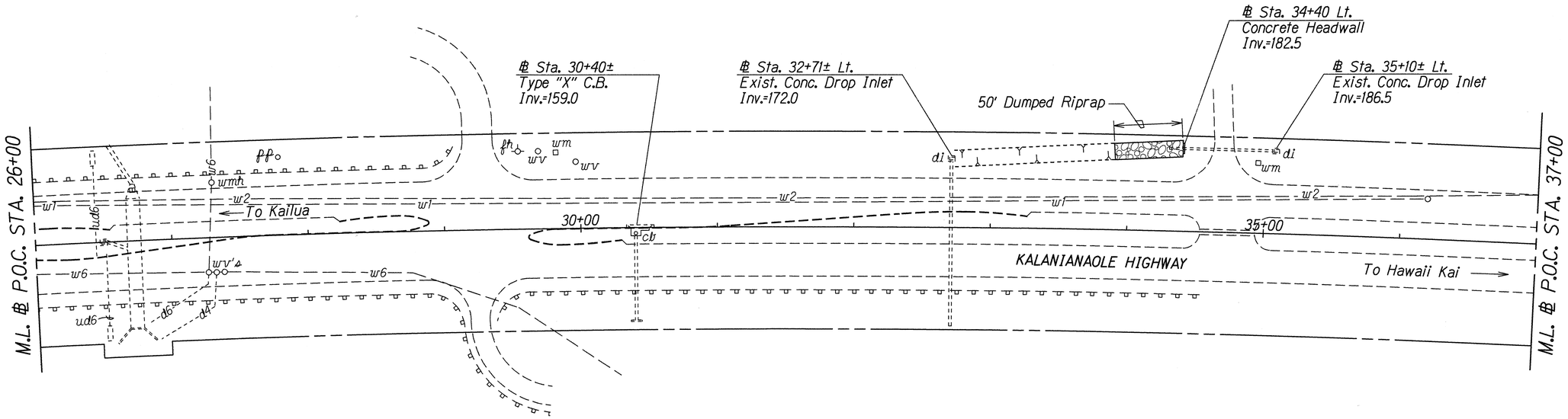

DATE	REVISION
6/14/96	Notes added to clarify plans.

STATE OF HAWAII
DEPARTMENT OF TRANSPORTATION
HIGHWAYS DIVISION

DRAINAGE PLAN

KALANIANAOLE HIGHWAY RESURFACING
Kailua Rd. to Hilu St.
Project No. 72A-01-96M

Scale: 1"=40' Date: May 1996

SHEET No. H2 OF 12 SHEETS

ORIGINAL PLAN
SURVEY PLOTTED BY
DRAWN BY A. Nomura DATE 5/20/96
TRACED BY
DESIGNED BY R. Sakamoto
QUANTITIES BY
CHECKED BY
NOTE BOOK
Hilo Bay
Reinforced Concrete

ADD. 45

FED. ROAD DIST. NO.	STATE	PROJ. NO.	FISCAL YEAR	SHEET NO.	TOTAL SHEETS
HAWAII	HAW.	72A-01-96M	1996	46	55

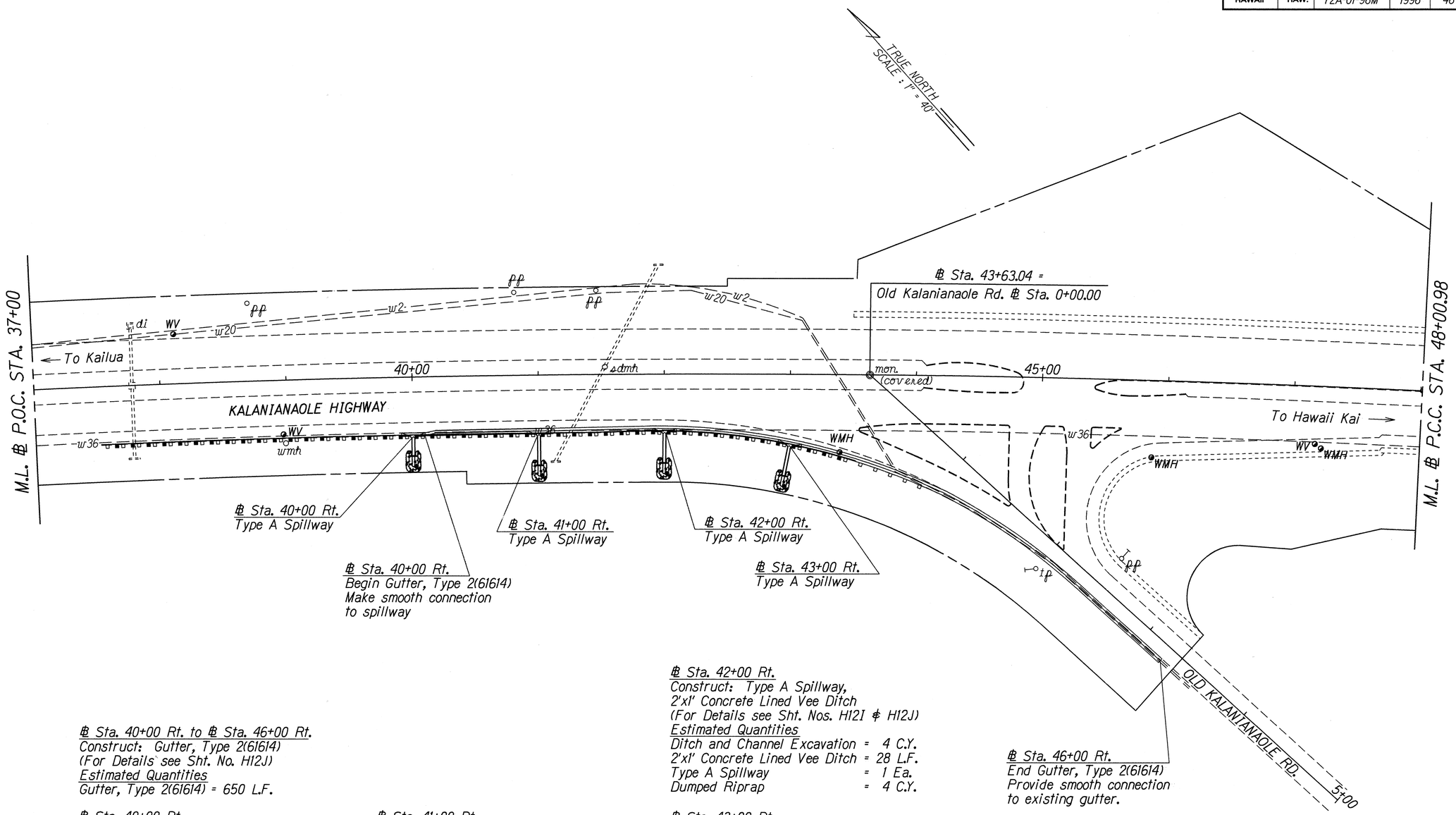

⌀ Sta. 40+00 Rt. to ⌀ Sta. 46+00 Rt.
Construct: Gutter, Type 2(61614)
(For Details see Sht. No. H12J)
Estimated Quantities
Gutter, Type 2(61614) = 650 L.F.

⌀ Sta. 40+00 Rt.
Construct: Type A Spillway,
2'x1' Concrete Lined Vee Ditch
(For Details see Sht. Nos. H12I & H12J)
Estimated Quantities

Ditch and Channel Excavation	=	4 C.Y.
2'x1' Concrete Lined Vee Ditch	=	28 L.F.
Type A Spillway	=	1 Ea.
Dumped Riprap	=	4 C.Y.

⌀ Sta. 41+00 Rt.
Construct: Type A Spillway,
2'x1' Concrete Lined Vee Ditch
(For Details see Sht. Nos. H12I & H12J)
Estimated Quantities

Ditch and Channel Excavation	=	4 C.Y.
2'x1' Concrete Lined Vee Ditch	=	28 L.F.
Type A Spillway	=	1 Ea.
Dumped Riprap	=	4 C.Y.

⌀ Sta. 42+00 Rt.
Construct: Type A Spillway,
2'x1' Concrete Lined Vee Ditch
(For Details see Sht. Nos. H12I & H12J)
Estimated Quantities

Ditch and Channel Excavation	=	4 C.Y.
2'x1' Concrete Lined Vee Ditch	=	28 L.F.
Type A Spillway	=	1 Ea.
Dumped Riprap	=	4 C.Y.

⌀ Sta. 43+00 Rt.
Construct: Type A Spillway,
2'x1' Concrete Lined Vee Ditch
(For Details see Sht. Nos. H12I & H12J)
Estimated Quantities

Ditch and Channel Excavation	=	4 C.Y.
2'x1' Concrete Lined Vee Ditch	=	28 L.F.
Type A Spillway	=	1 Ea.
Dumped Riprap	=	4 C.Y.

ORIGINAL PLAN	SURVEY PLOTTED BY	DATE 5/20/96
	PLANS PREPARED BY A. Hiraoka	
	NOTE BOOK	DESIGNED BY F. Sakamoto
	Hilo Bay	QUANTITIES BY
	Bridge	CHECKED BY

DATE	REVISION
12/5/96	Added spillways at ⌀ Sta. 40+00 Rt. and ⌀ Sta. 43+00 Rt.
6/14/96	Notes added to clarify plans.

STATE OF HAWAII
DEPARTMENT OF TRANSPORTATION
HIGHWAYS DIVISION

DRAINAGE PLAN

KALANIANAOLE HIGHWAY RESURFACING
Kailua Rd. to Hilu St.
Project No. 72A-01-96M

Scale: 1"=40' Date: May 1996

SHEET No. H3 OF 12 SHEETS

C.O. ADD. 46

FED. ROAD DIST. NO.	STATE	PROJ. NO.	FISCAL YEAR	SHEET NO.	TOTAL SHEETS
HAWAII	HAW.	72A-01-96M	1996	47	55

℄ Sta. 52+50± Lt.
Install: Dumped Riprap at end of exist. spillway along eroded area
(For Details see Sht. No. H12E)
Estimated Quantities)
Dumped Riprap = 60 C.Y.

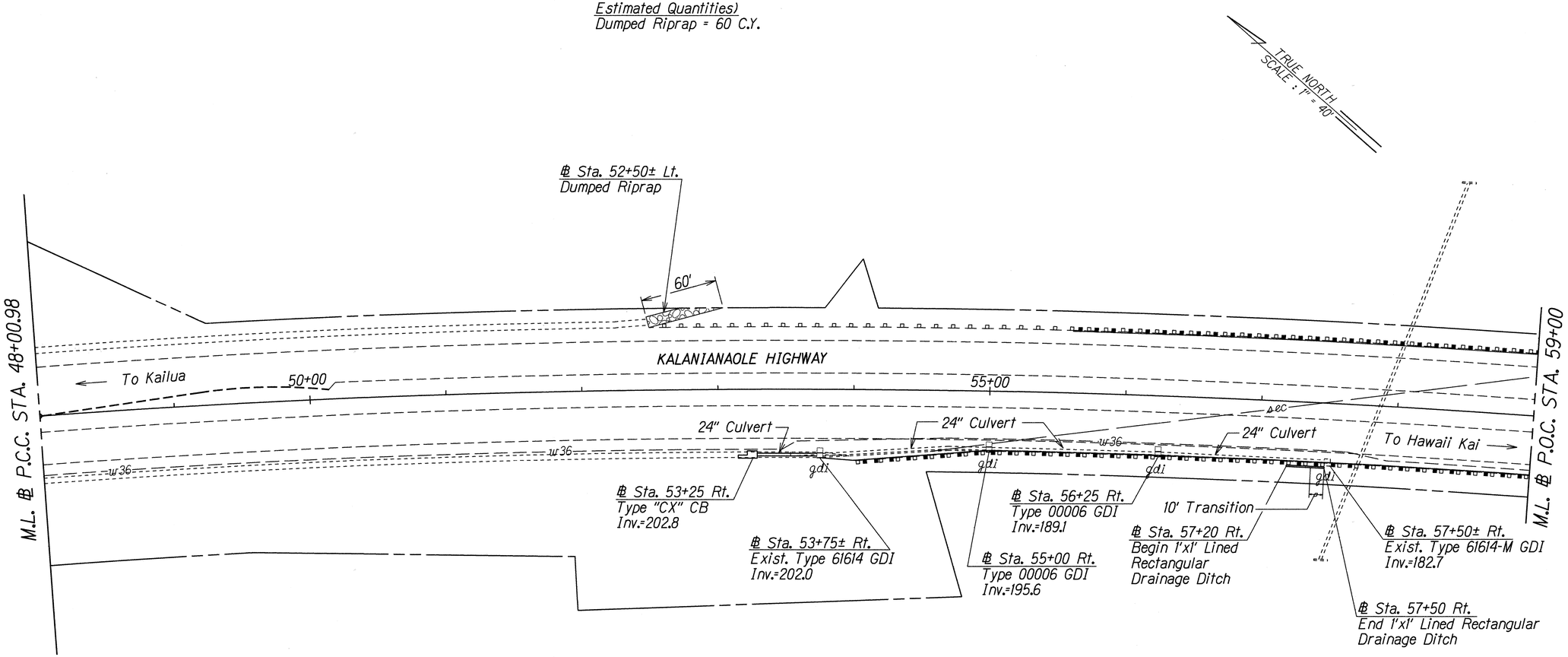

℄ Sta. 53+25 Rt.
Construct: Type "CX" CB
(For Details see Sht. No. H12N)
Install: 24" CSP
Reconstruct: Concrete Gutter
(For Details see Sht. No. H12O)
Estimated Quantities
Structure Excavation for Drainage System = 41 C.Y.
Gutter, Type 2(61214) = 50 L.F.
24" CSP, Sht. t=0.109" = 50 L.F.
Type "CX" CB = 1 Ea.
4.00 Ft. to 4.99 Ft.

℄ Sta. 55+00 Rt.
Construct: Type 00006 GDI
(For Details see Sht. No. H12G)
Estimated Quantities
Type 00006 GDI = 1 Ea.
4.00 Ft. to 4.99 Ft.

℄ Sta. 56+25 Rt.
Construct: Type 00006 GDI
(For Details see Sht. No. H12G)
Estimated Quantities
Type 00006 GDI = 1 Ea.
4.00 Ft. to 4.99 Ft.

℄ Sta. 57+20 Rt. to ℄ Sta. 57+50 Rt.
Construct: 1'x1' Lined Rectangular Drainage Ditch
(For Details see Sht. No. H12K)
Estimated Quantities
Ditch and Channel Excavation = 3 C.Y.
1'x1' Lined Rectangular Drainage Ditch = 30 L.F.

℄ Sta. 57+50± Rt.
Modify: Type 61614-M GDI
(For Details see Sht. No. H12L)

DATE	REVISION
12/5/96	Changed beginning of 1'x1' Lined Rectangular Drainage Ditch
10/1/96	Notes revised to clarify plans.
9/13/96	Changed Type 61214B GDI to Type "CX" CB and portion of Type 2D Curb replaced with 1'x1' Lined Rectangular Drainage Ditch.
6/14/96	Notes added to clarify plans.

STATE OF HAWAII
DEPARTMENT OF TRANSPORTATION
HIGHWAYS DIVISION

DRAINAGE PLAN

KALANIANAOLE HIGHWAY RESURFACING
Kailua Rd. to Hilu St.
Project No. 72A-01-96M

Scale: 1"=40' Date: May 1996

SHEET No. H4 OF 12 SHEETS

ORIGINAL PLAN
SURVEY PLOTTED BY
DRAWN BY S. Nomura DATE 5/20/96
TRACED BY
NOTE BOOK
DESIGNED BY R. Sakamoto
QUANTITIES BY
CHECKED BY

C.O. ADD. 47

FED. ROAD DIST. NO.	STATE	PROJ. NO.	FISCAL YEAR	SHEET NO.	TOTAL SHEETS
HAWAII	HAW.	72A-01-96M	1996	48	55

℄ Sta. 62+50
Modify: Exist. Type 61616 Grates
(For Details see Sht. No. H12H)
Estimated Quantities
Type 61616M Grate = 2 Ea.

TRUE NORTH
SCALE : 1" = 40'

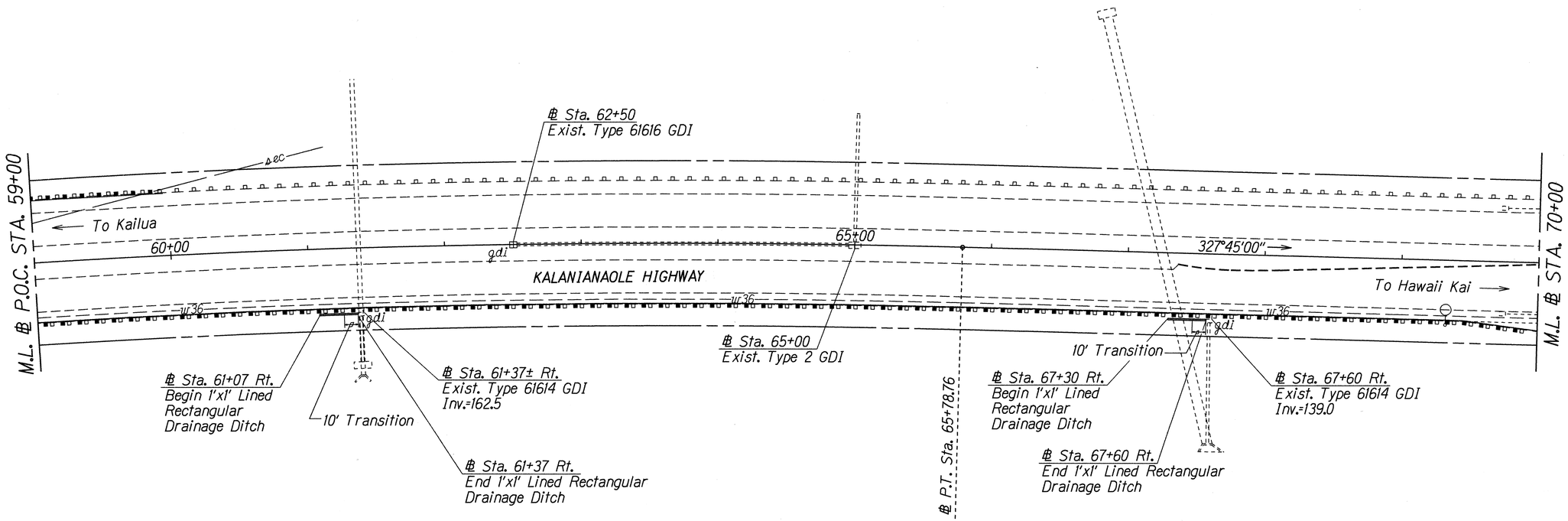

℄ Sta. 61+07 Rt. to ℄ Sta. 61+37± Rt.
Construct: 1'x1' Lined Rectangular Drainage Ditch
(For Details see Sht. No. H12K)
Estimated Quantities
Ditch and Channel Excavation = 3 C.Y.
1'x1' Lined Rectangular Ditch = 30 L.F.

℄ Sta. 67+30 Rt. to ℄ Sta. 67+60 Rt.
Construct: 1'x1' Lined Rectangular Drainage Ditch
(For Details see Sht. No. H12K)
Estimated Quantities
Ditch and Channel Excavation = 3 C.Y.
1'x1' Lined Rectangular Ditch = 30 L.F.

℄ Sta. 61+37± Rt.
Modify: Type 61614 GDI
(For Details see Sht. No. H12K)

℄ Sta. 65+00
Dispose: Exist. Grates
Install: Type A-9P Grates
(For Details see Std. Plan Sht. H-09)
Estimated Quantities
Type A-9P Grate = 2 Ea.

℄ Sta. 67+60 Rt.
Modify: Type 61614 GDI
(For Details see Sht. No. H12K)

DATE	REVISION
12/5/96	Changed beginning of 1'x1' Lined Rectangular Drainage Ditch
10/1/96	Notes revised to clarify plans.
9/13/96	Portion of Type 2D Curb replaced with 1'x1' Lined Rectangular Drainage Ditch.
6/14/96	Notes added to clarify plans.

STATE OF HAWAII
DEPARTMENT OF TRANSPORTATION
HIGHWAYS DIVISION

DRAINAGE PLAN

KALANIANAOLE HIGHWAY RESURFACING
Kailua Rd. to Hilu St.
Project No. 72A-01-96M

Scale: 1"=40' Date: May 1996

SHEET No. H5 OF 12 SHEETS

C.O. ADD. 48

ORIGINAL PLAN
SURVEY PLOTTED BY
DRAWN BY J. Nomura DATE 12/20/96
TRACED BY
NOTE BOOK
DESIGNED BY R. Sakamoto
QUANTITIES BY
CHECKED BY

FED. ROAD DIST. NO.	STATE	PROJ. NO.	FISCAL YEAR	SHEET NO.	TOTAL SHEETS
HAWAII	HAW.	72A-01-96M	1996	49	55

℄ Sta. 70+50±
Modify: Exist. Type 61616 Grates
(For Details see Sht. No. H12H)
Estimated Quantities
Type 61616M Grate = 2 Ea.

℄ Sta. 72+00
Construct: Type 61616M GDI
(For Grate Details see Sht. No. H12H,
for GDI and Frame Details see
Std. Plan Shts. H-12 & H-13)
Estimated Quantities
Type 61616M GDI, 3.0 Ft. = 1 Ea.

TRUE NORTH
SCALE : 1" = 40'

℄ Sta. 80+92±
Modify: Exist. Type 61616 Grates
(For Details see Sht. No. H12H)
Estimated Quantities
Type 61616M Grate = 2 Ea.

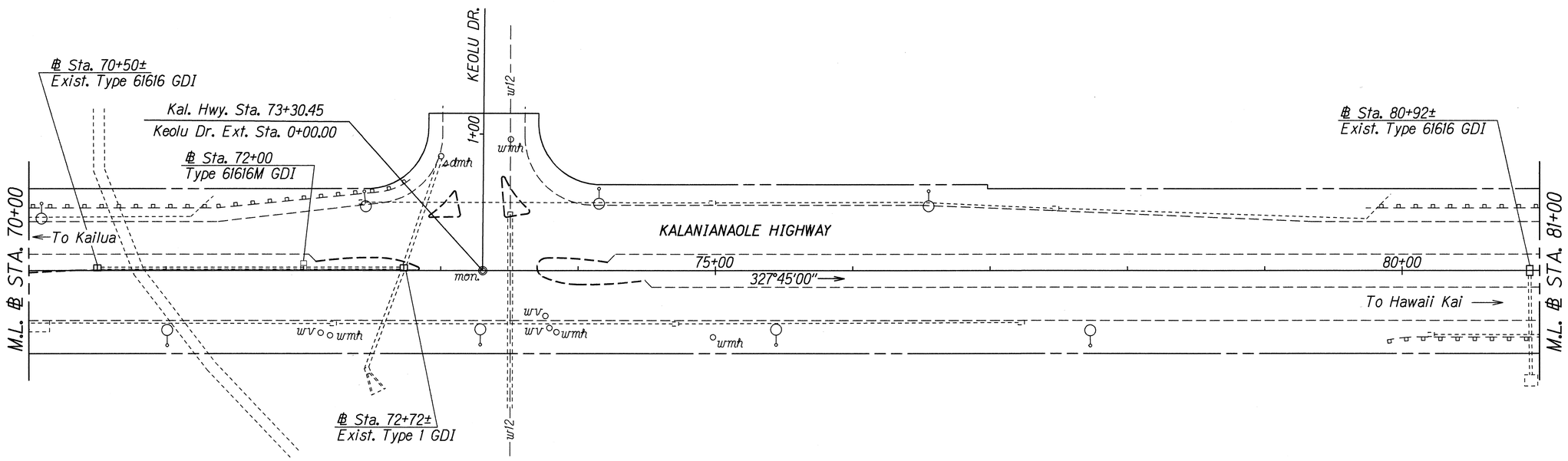

℄ Sta. 72+72±
Dispose: Exist. Grate
Install: Type A-9P Grate
(For Details see Std. Plan Sht. H-09)
Estimated Quantities
Type A-9P Grate = 1 Ea.

DATE	REVISION
6/14/96	Notes added to clarify plans.

STATE OF HAWAII
DEPARTMENT OF TRANSPORTATION
HIGHWAYS DIVISION

DRAINAGE PLAN

KALANIANAOLE HIGHWAY RESURFACING
Kailua Rd. to Hilu St.
Project No. 72A-01-96M

Scale: 1"=40' Date: May 1996

SHEET No. H6 OF 12 SHEETS

ORIGINAL PLAN
SURVEY PLOTTED BY
DRAWN BY L. Nimura DATE 5/21/96
TRACED BY
DESIGNED BY R. Sakamoto
QUANTITIES BY
CHECKED BY
NOTE BOOK
ORIGINAL SIGNED BY
REVISED

FED. ROAD DIST. NO.	STATE	PROJ. NO.	FISCAL YEAR	SHEET NO.	TOTAL SHEETS
HAWAII	HAW.	72A-01-96M	1996	50	55

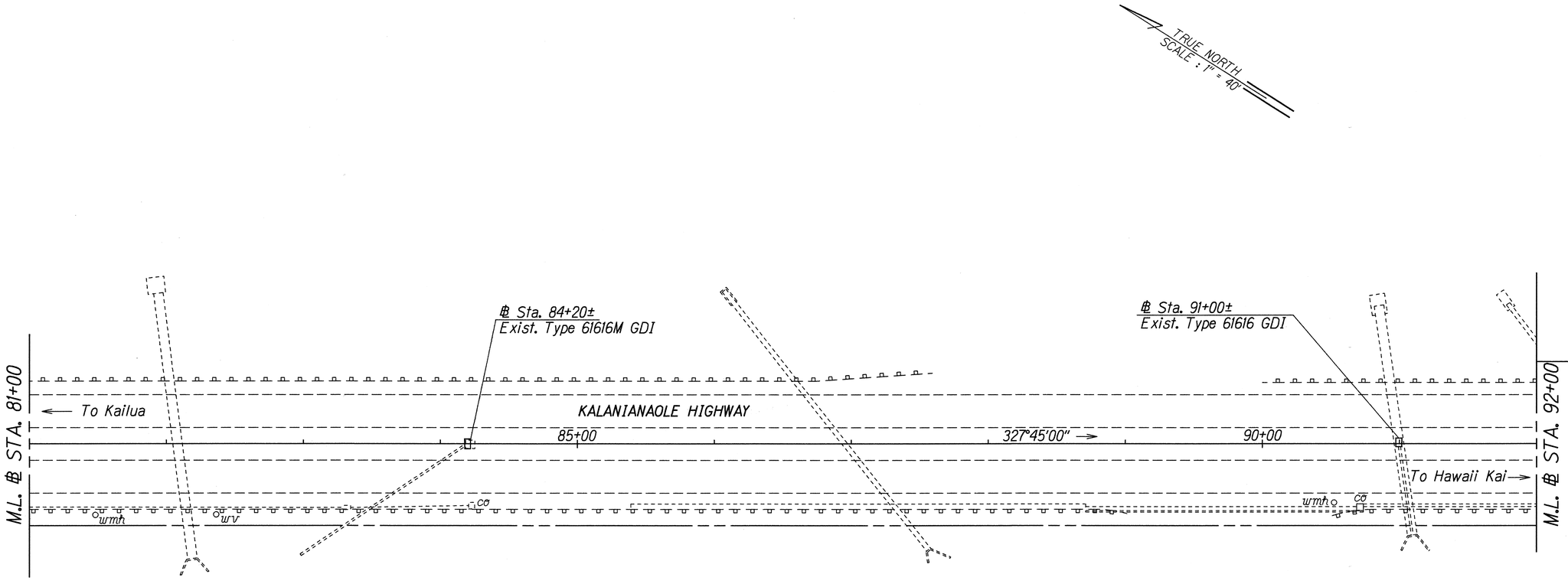

℄ Sta. 84+20±
Demolish, Remove and Dispose:
Exist. Type 2 GDI
Construct: Type 61616M GDI
(For Grate Details see Sht. No. H12H,
for GDI and Frame Details see
Std. Plan Shts. H-12 & H-13)
Estimated Quantities
Type 61616M GDI, 2.8 Ft. = 1 Ea.

℄ Sta. 91+00±
Modify: Exist. Type 61616 Grates
(For Details see Sht. No. H12H)
Estimated Quantities
Type 61616M Grate = 2 Ea.

DATE	REVISION
6/14/96	Notes added to clarify plans.

STATE OF HAWAII
DEPARTMENT OF TRANSPORTATION
HIGHWAYS DIVISION

DRAINAGE PLAN

KALANIANAOLE HIGHWAY RESURFACING
Kailua Rd. to Hilu St.
Project No. 72A-01-96M

Scale: 1"=40' Date: May 1996

SHEET No. H7 OF 12 SHEETS

ORIGINAL PLAN	SURVEY PLOTTED BY	DATE
	DRAWN BY A. Nomura	5/21/96
NOTE BOOK	TRACED BY	
	DESIGNED BY R. Sakamoto	
	QUANTITIES BY	
	CHECKED BY	

FED. ROAD DIST. NO.	STATE	PROJ. NO.	FISCAL YEAR	SHEET NO.	TOTAL SHEETS
HAWAII	HAW.	72A-01-96M	1996	51	55

TRUE NORTH
SCALE : 1" = 40'

℄ Sta. 99+00±
Modify: Exist. Type 61616 Grates
(For Details see Sht. No. H12H)
Estimated Quantities
Type 61616M Grate = 2 Ea.

℄ Sta. 101+50± Lt. to ℄ Sta. 103+00 Lt.
Construct: Gutter, Type 2(61614)
Estimated Quantities
Gutter, Type 2(61614) = 150 L.F.

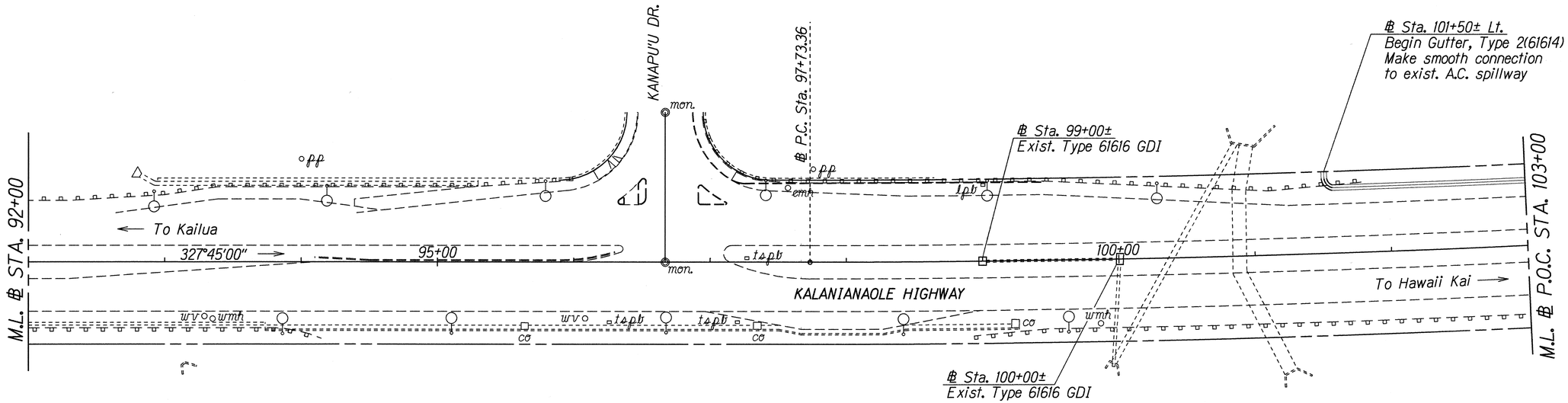

℄ Sta. 100+00±
Modify: Exist. Type 61616 Grates
(For Details see Sht. No. H12H)
Estimated Quantities
Type 61616M Grate = 2 Ea.

ORIGINAL PLAN	SURVEY PLOTTED BY	DATE 5/21/96
	DRAWN BY J. Nawa	
	TRACED BY	
NOTE BOOK	DESIGNED BY J. Sakamoto	
Ohi-2 Ohi-3 Ohi-4	QUANTITIES BY	
No.	CHECKED BY	

DATE	REVISION
6/14/96	Notes added to clarify plans.

STATE OF HAWAII
DEPARTMENT OF TRANSPORTATION
HIGHWAYS DIVISION

DRAINAGE PLAN

KALANIANAOLE HIGHWAY RESURFACING
Kailua Rd. to Hilu St.
Project No. 72A-01-96M

Scale: 1"=40' Date: May 1996

SHEET No. H8 OF 12 SHEETS

ADD. 51

FED. ROAD DIST. NO.	STATE	PROJ. NO.	FISCAL YEAR	SHEET NO.	TOTAL SHEETS
HAWAII	HAW.	72A-01-96M	1996	52	55

℄ Sta. 103+00 Lt. to ℄ Sta. 114+00 Lt.
Construct: Gutter, Type 2(61614)
Estimated Quantities
Gutter, Type 2(61614) = 1100 L.F.

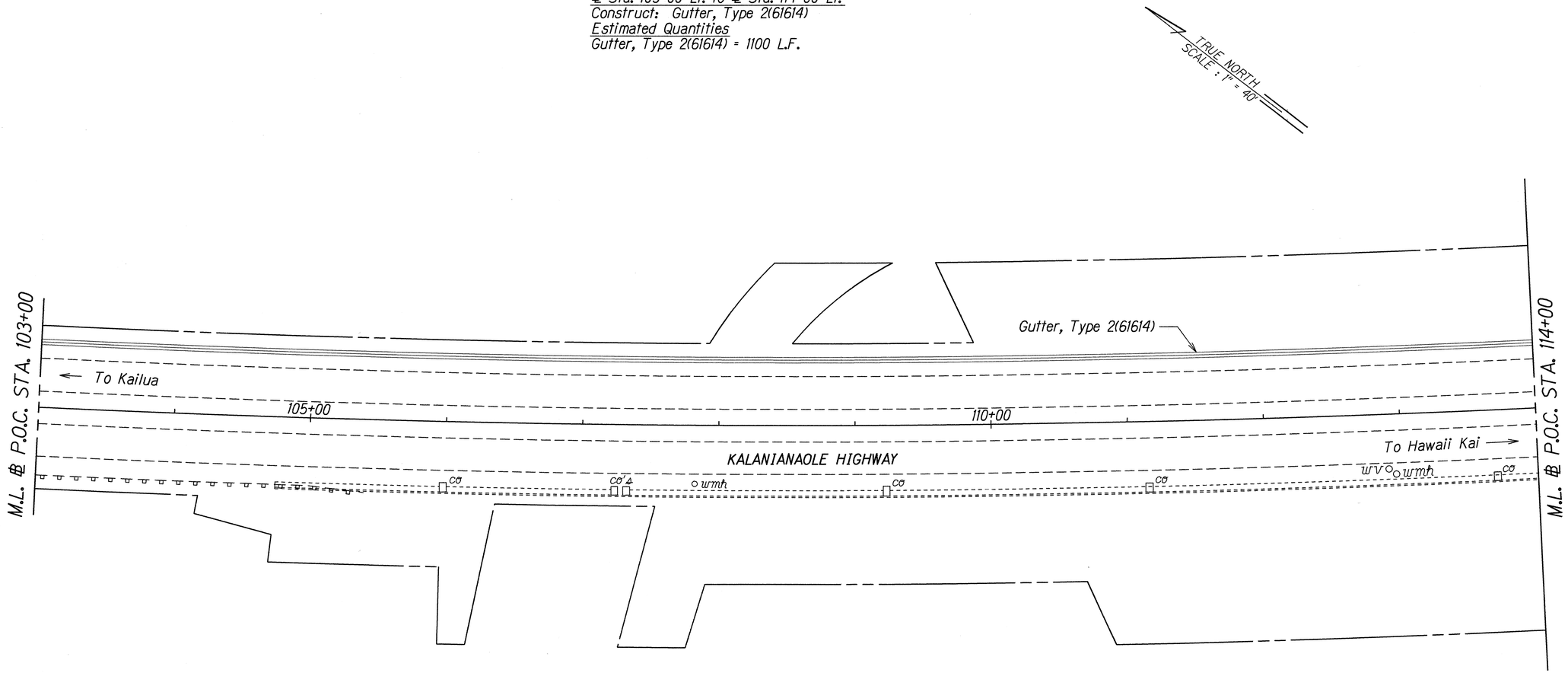

DATE	REVISION
6/14/96	Notes added to clarify plans.

STATE OF HAWAII
DEPARTMENT OF TRANSPORTATION
HIGHWAYS DIVISION

DRAINAGE PLAN

KALANIANAOLE HIGHWAY RESURFACING
Kailua Rd. to Hilu St.
Project No. 72A-01-96M

Scale: 1"=40' Date: May 1996

SHEET No. H9 OF 12 SHEETS

ADD. 52

ORIGINAL PLAN
SURVEY PLOTTED BY
DRAWN BY A. Nimura DATE 5/21/96
TRACED BY
NOTE BOOK
DESIGNED BY R. Sakamoto
QUANTITIES BY
CHECKED BY

FED. ROAD DIST. NO.	STATE	PROJ. NO.	FISCAL YEAR	SHEET NO.	TOTAL SHEETS
HAWAII	HAW.	72A-01-96M	1996	53	55

Ⓑ Sta. 114+00 Lt. to Ⓑ Sta. 114+50 Lt.
Ⓑ Sta. 118+50 Lt. to Ⓑ Sta. 122+00 Lt.
Construct: Gutter, Type 2(61614)
Estimated Quantities
Gutter, Type 2(61614) = 400 L.F.

Ⓑ Sta. 114+55± Lt.
Construct: Inlet Structure and Concrete Load Distribution Pad over Pipe
(For Details see Sht. No. H12F)
Install: 24" CSP
Estimated Quantities
Structure Excavation for Drainage System = 40 C.Y.
Class A Concrete for Drainage System = 7 C.Y.
Reinforcing Steel For Drainage System = 675 Lb.
24" CSP, Sht. "t"=0.109" = 60 L.F.

Ⓑ Sta. 115+18± Lt.
Construct: Standard Concrete Headwall
(For Details see Std. Plan Sht. H-16)
2'x1' Concrete Lined Vee Ditch
(For Detail see Sht. No. H12J)
Estimated Quantities
Structure Excavation for Drainage System = 6 C.Y.
Ditch and Channel Excavation = 13 C.Y.
Class A Concrete for Drainage System = 2 C.Y.
Reinforcing Steel for Drainage System = 43 Lb.
2'x1' Concrete Lined Vee Ditch = 90 L.F.
Dumped Riprap = 4 C.Y.

Ⓑ Sta. 118+00 Lt.
Construct: Type A Spillway
(For Detail see Sht. No. H12I)
Estimated Quantities
Type A Spillway = 1 Ea.

Ⓑ Sta. 122+00 Lt.
Construct: 2'x1' Concrete Lined Vee Ditch
(For Detail see Sht. No. H12J)
Estimated Quantities
Ditch and Channel Excavation = 12 C.Y.
2'x1' Concrete Lined Vee Ditch = 80 L.F.
Dumped Riprap = 4 C.Y.

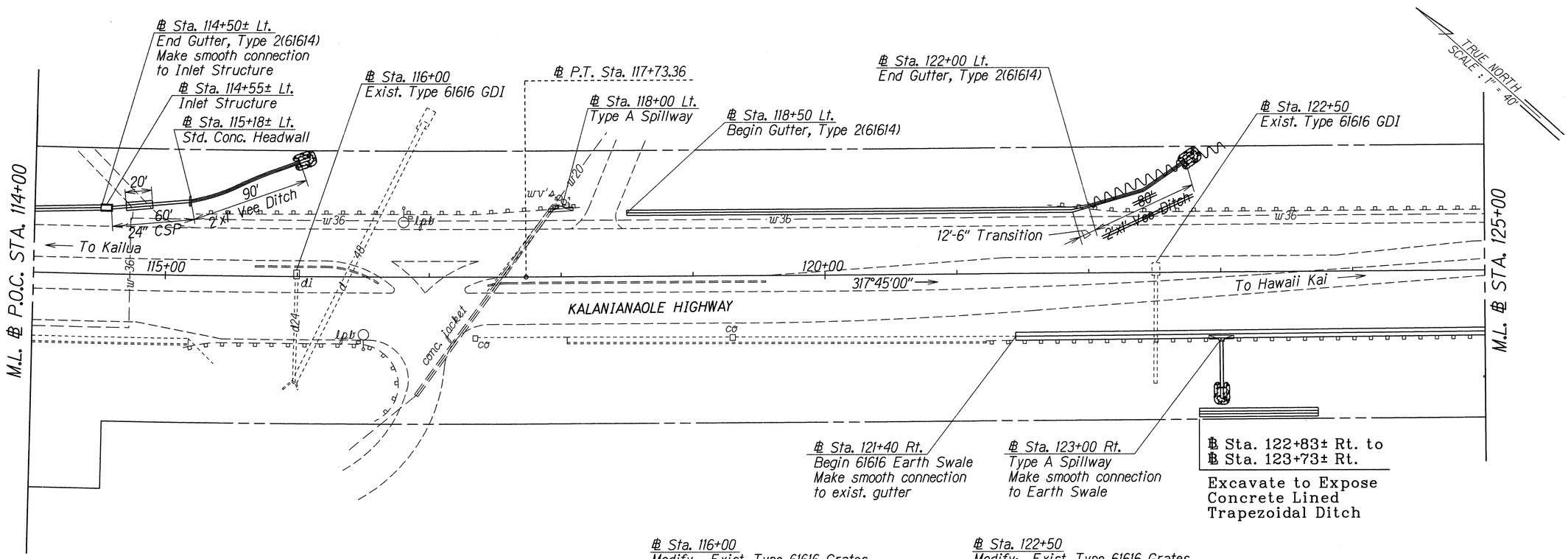

Ⓑ Sta. 116+00
Modify: Exist. Type 61616 Grates
(For Details see Sht. No. H12H)
Estimated Quantities
Type 61616M Grate = 2 Ea.

Ⓑ Sta. 122+50
Modify: Exist. Type 61616 Grates
(For Details see Sht. No. H12H)
Estimated Quantities
Type 61616M Grate = 2 Ea.

Ⓑ Sta. 121+40 Rt. to Ⓑ Sta. 125+00 Rt.
Construct: 61616 Earth Swale
(For Details see Sht. No. H12J)
Estimated Quantities
Ditch and Channel Excavation = 20 C.Y.

Ⓑ Sta. 123+00 Rt.
Construct: Type A Spillway,
2'x1' Concrete Lined Vee Ditch
(For Details see Sht. Nos. H12I & H12J)
Estimated Quantities
Ditch and Channel Excavation = 5 C.Y.
2'x1' Concrete Lined Vee Ditch = 32 L.F.
Type A Spillway = 1 Ea.
Dumped Riprap = 4 C.Y.

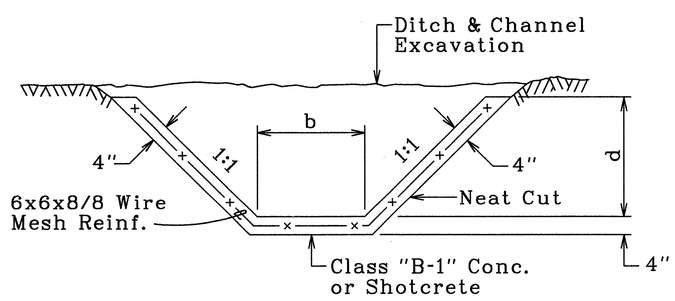

CONCRETE LINED DITCH (b x d)
Scale: 3/4"=1'-0"

~~	Squiggly line for as-built deletion
~~100.00~~	Double line for as-built deletion
Roadway	Text for as-built posting

DATE	REVISION
6/14/96	Notes added to clarify plans.

STATE OF HAWAII
DEPARTMENT OF TRANSPORTATION
HIGHWAYS DIVISION

DRAINAGE PLAN

KALANIANAOLE HIGHWAY RESURFACING
Kailua Rd. to Hilu St.
Project No. 72A-01-96M

Scale: 1"=40' Date: May 1996

SHEET No. H10 OF 12 SHEETS

ORIGINAL PLAN
SURVEY PLOTTED BY
DRAWN BY A. Nomura & R. Calo DATE 5/21/96
TRACED BY
DESIGNED BY R. Sakamoto
NOTE BOOK
QUANTITIES BY
CHECKED BY

FED. ROAD DIST. NO.	STATE	PROJ. NO.	FISCAL YEAR	SHEET NO.	TOTAL SHEETS
HAWAII	HAW.	72A-01-96M	1996	54	55

126+35± Lt.
℄ Sta. ~~126+43± Lt.~~
Construct: Type A Spillway,
2'x1' Concrete Lined Vee Ditch
(For Details see Sht. Nos. H12I & H12J)
Estimated Quantities
Ditch and Channel Excavation = 6 C.Y.
2'x1' Concrete Lined Vee Ditch = 44 L.F.
Type A Spillway = 1 Ea.
Dumped Riprap = 4 C.Y.

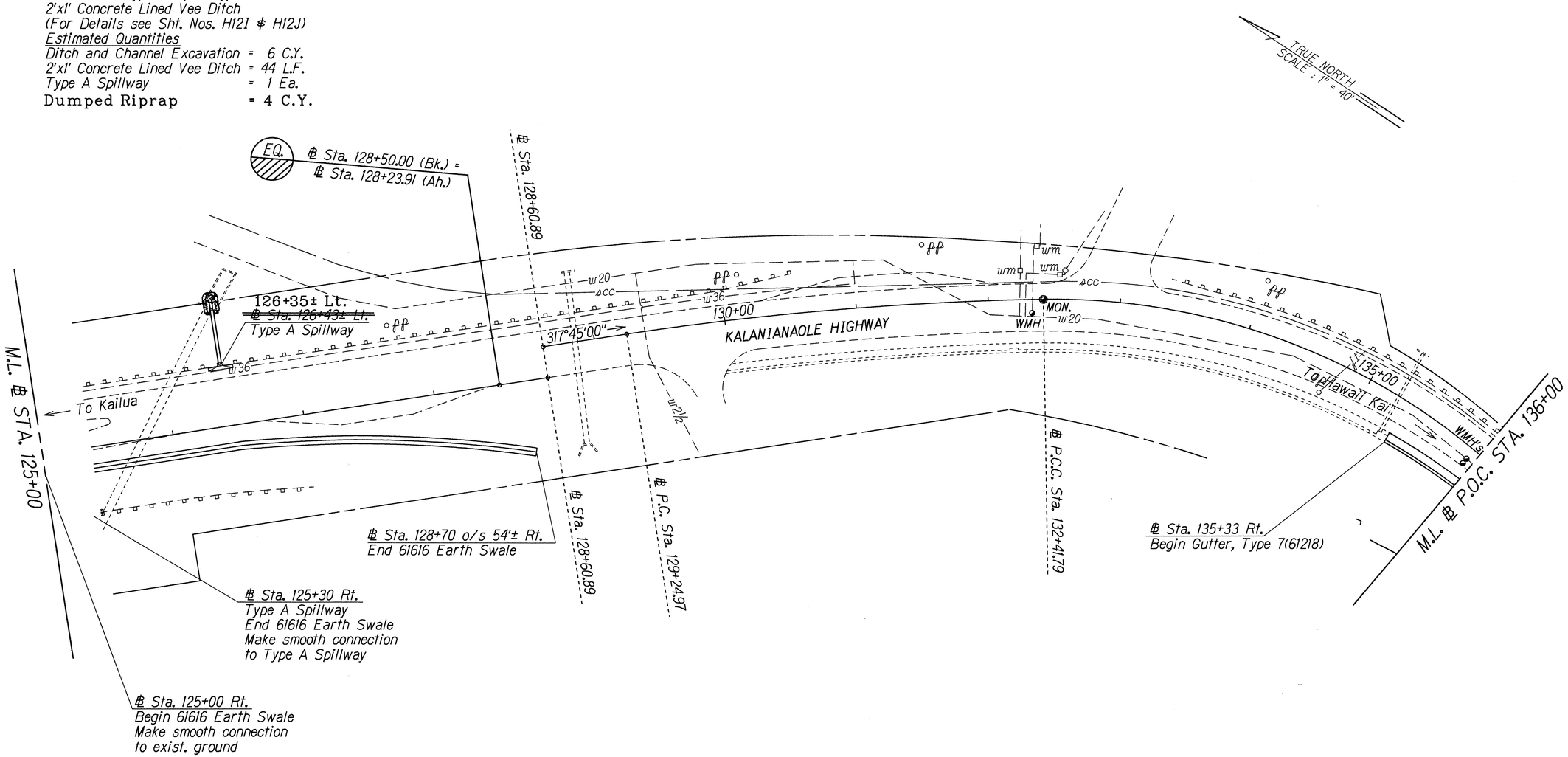

℄ Sta. 135+33 Rt. to ℄ Sta. 136+00 Rt.
Construct: Gutter, Type 7(61218)
Estimated Quantities
Gutter, Type 7(61218) = 67 L.F.

℄ Sta. 125+00 Rt. to ℄ Sta. 128+70 o/s 54'± Rt.
Construct: 61616 Earth Swale
Estimated Quantities
Ditch and Channel Excavation = 21 C.Y.

℄ Sta. 125+00 Rt. to ℄ Sta. 125+30 Rt.
Construct: 61616 Earth Swale
Estimated Quantities
Ditch and Channel Excavation = 2 C.Y.

℄ Sta. 125+30 Rt.
Construct: Type A Spillway,
2'x1' Concrete Lined Vee Ditch
(For Details see Sht. Nos. H12I & H12J)
Estimated Quantities
Ditch and Channel Excavation = 4 C.Y.
2'x1' Concrete Lined Vee Ditch = 30 L.F.
Type A Spillway = 1 Ea.
Dumped Riprap = 4 C.Y.

LEGEND FOR AS-BUILT POSTINGS	
~~	Squiggly line for as-built deletion
~~100.00~~	Double line for as-built deletion
Roadway	Text for as-built posting

DATE	REVISION
12/5/96	Added spillway at ℄ Sta. 126+43± Rt.
6/14/96	Notes added to clarify plans.

STATE OF HAWAII
DEPARTMENT OF TRANSPORTATION
HIGHWAYS DIVISION

DRAINAGE PLAN

KALANIANAOLE HIGHWAY RESURFACING
Kailua Rd. to Hilu St.
Project No. 72A-01-96M

Scale: 1"=40' Date: May 1996

SHEET No. H11 OF 12 SHEETS

ORIGINAL PLAN	SURVEY PLOTTED BY	DATE
	DRAWN BY A. Nomura & R. Saito	5/20/96
	TRACED BY	
NOTE BOOK	DESIGNED BY R. Sakamoto	
dh1a,8el	QUANTITIES BY	
pkaihpl1dg	CHECKED BY	

C.O. ADD. 54

FED. ROAD DIST. NO.	STATE	PROJ. NO.	FISCAL YEAR	SHEET NO.	TOTAL SHEETS
HAWAII	HAW.	72A-01-96M	1996	55	55

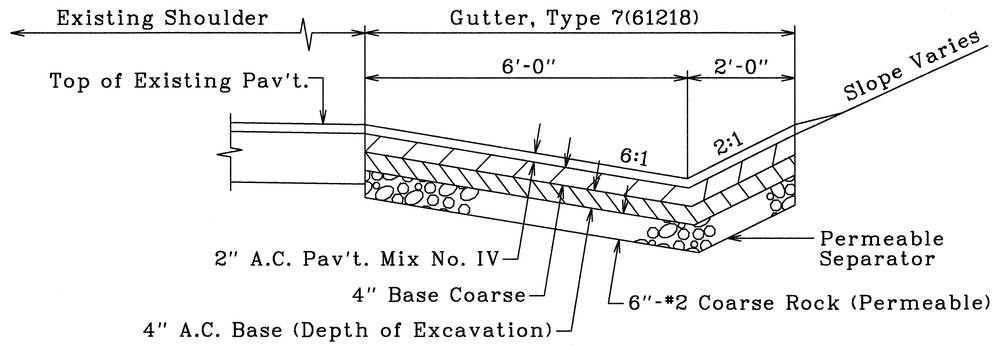

GUTTER, TYPE 7(61218) DETAIL

℄ STA. 138+16 RT. TO ℄ STA. 140+30 RT.
SCALE: 3/4"=1'-0"

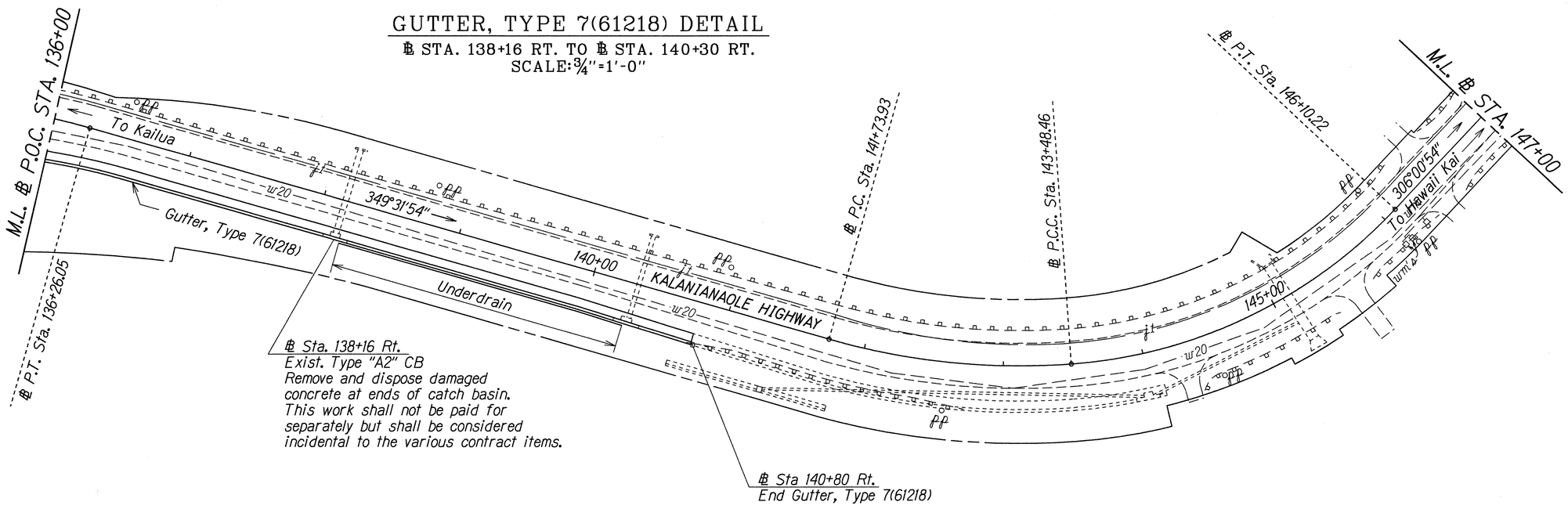

℄ Sta. 136+00 Rt. to ℄ Sta. 140+80 Rt.
Construct: Gutter, Type 7(61218)
Estimated Quantities
Gutter, Type 7(61218) = 480 L.F.

℄ Sta. 138+19 Rt. to ℄ Sta. 140+29 Rt.
Install: Underdrain
(For Details see Sht. No. H12J & H12P)
Estimated Quantities

Underdrain	= 210 L.F.
6-Inch Perforated Underdrain Pipe	= 210 L.F.
6-Inch Nonperforated Underdrain Pipe	= 4 L.F.

LEGEND FOR AS-BUILT POSTINGS

∿∿∿	Squiggly line for as-built deletion
~~100.00~~	Double line for as-built deletion
Roadway	Text for as-built posting

DATE	REVISION
2/20/97	Underdrain added.
6/14/96	Notes added to clarify plans.

STATE OF HAWAII
DEPARTMENT OF TRANSPORTATION
HIGHWAYS DIVISION

DRAINAGE PLAN

KALANIANAOLE HIGHWAY RESURFACING
Kailua Rd. to Hilu St.
Project No. 72A-01-96M

Scale: 1"=40' Date: May 1996

SHEET No. H12 OF 12 SHEETS

C.O. ADD. 55

ORIGINAL PLAN	SURVEY PLOTTED BY	DATE
	DRAWN BY A. Nomura & R. Sato	5/21/96
	TRACED BY	
NOTE BOOK	DESIGNED BY R. Sakamoto	
dh,aj,8(a)	QUANTITIES BY	
gk,wp,12,dg	CHECKED BY	

FED. ROAD DIST. NO.	STATE	PROJ. NO.	FISCAL YEAR	SHEET NO.	TOTAL SHEETS
HAWAII	HAW.	72A-01-96M	1996	ADD. 55S-1	55

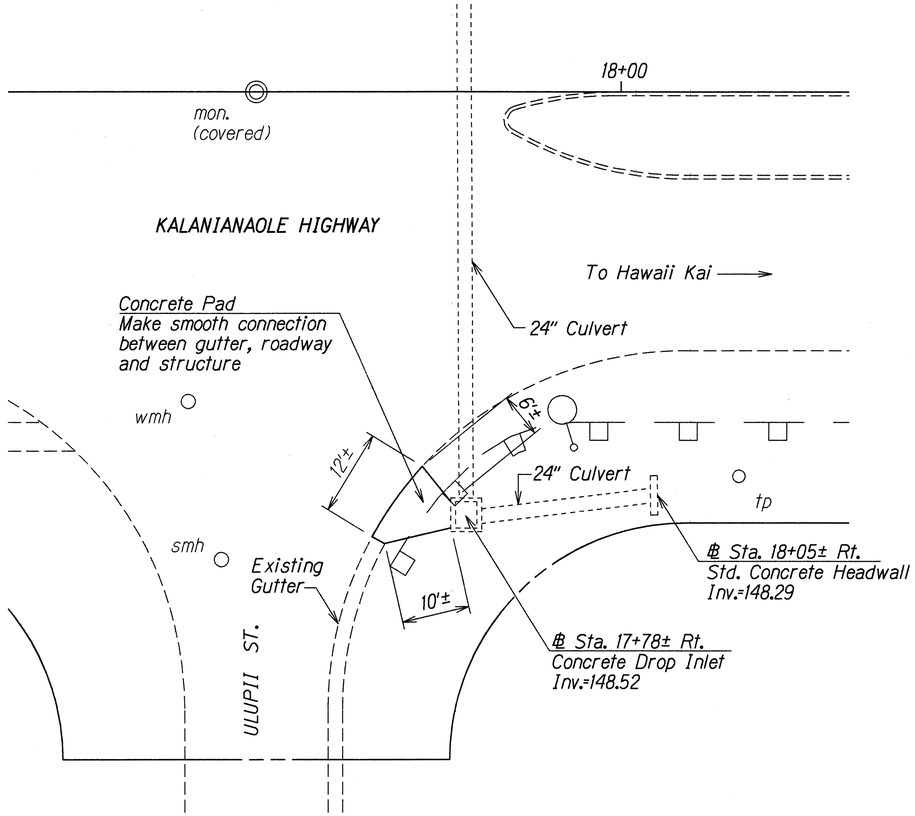

PLAN

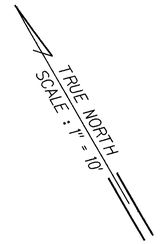

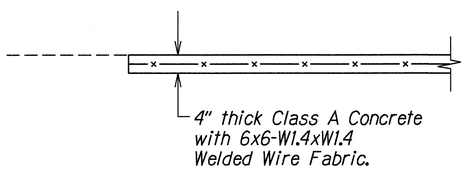

TYPICAL SECTION

Scale: 3/4"=1'-0"

CONCRETE PAD DETAIL AT ℄ STA. 17+78± RT.

DRAINAGE NOTES:

1. Existing drainage systems will be functional at all times during construction. The Contractor is to furnish materials, equipment, labor, tools and incidentals necessary to accomplish maintenance of flow. The cost shall be incidental to the various Contract Items.
2. The Contractor shall verify the locations of all existing culverts and utilities in the field. Any existing culverts and utilities damaged during construction shall be repaired or replaced by the Contractor at his own expense.
3. Concrete shall be Class A unless otherwise noted.

DATE	REVISION
9/13/96	Class B Concrete changed to Class A.
6/14/96	Details added to complete drainage plan.

STATE OF HAWAII
DEPARTMENT OF TRANSPORTATION
HIGHWAYS DIVISION

DRAINAGE DETAILS

KALANIANAOLE HIGHWAY RESURFACING
Kailua Rd. to Hilu St.
Project No. 72A-01-96M

Scale: As Noted — Date: June, 1996

SHEET No. H12A OF 12 SHEETS

C.O. ADD. 55S–1

ORIGINAL PLAN — SURVEY PLOTTED BY — DRAWN BY Russell Saito — TRACED BY — DESIGNED BY Roy Sakamoto — QUANTITIES BY — CHECKED BY — DATE — NOTE BOOK 0000 0000 Bikini/Udon No.

FED. ROAD DIST. NO.	STATE	PROJ. NO.	FISCAL YEAR	SHEET NO.	TOTAL SHEETS
HAWAII	HAW.	72A-01-96M	1996	ADD. 55S-2	55

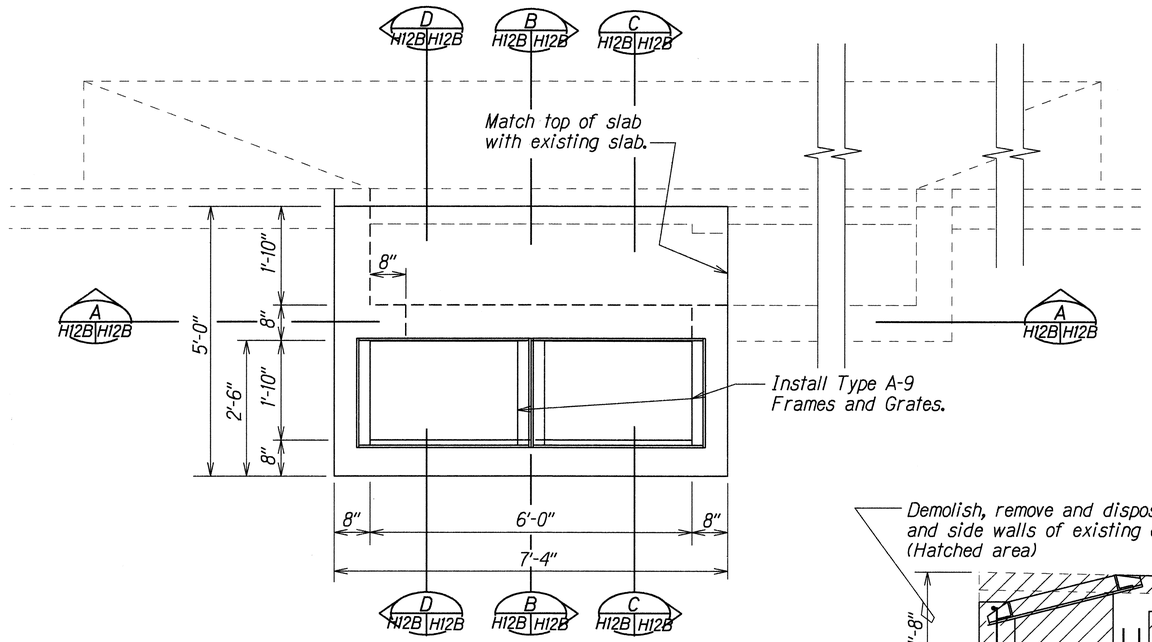

PLAN

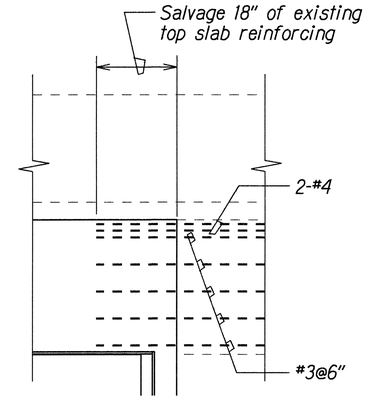

PLAN VIEW OF EXISTING TOP SLAB REINFORCING

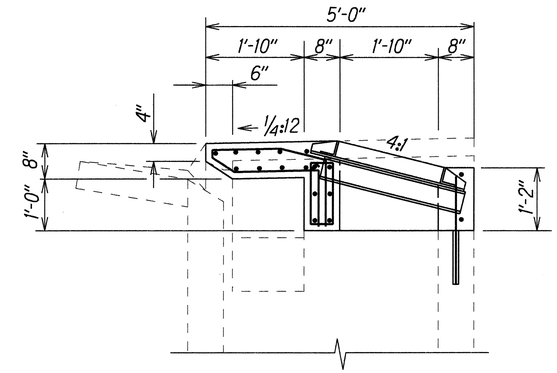

SECTION B H12B H12B

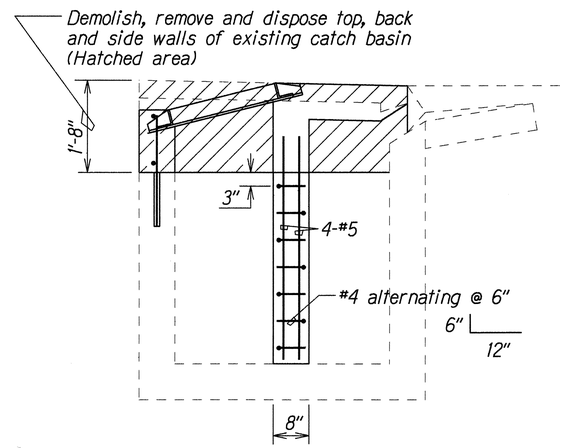

SECTION D H12B H12B

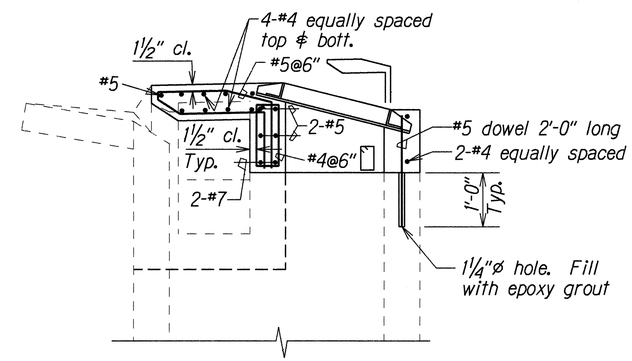

SECTION C H12B H12B

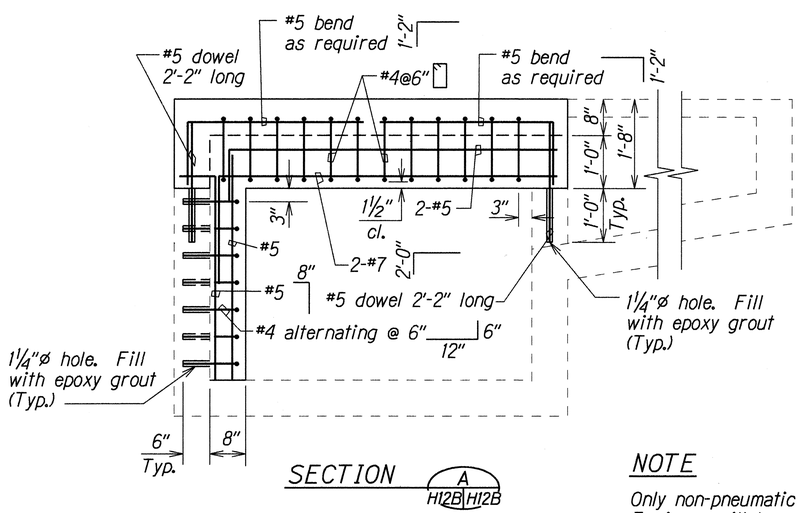

SECTION A H12B H12B

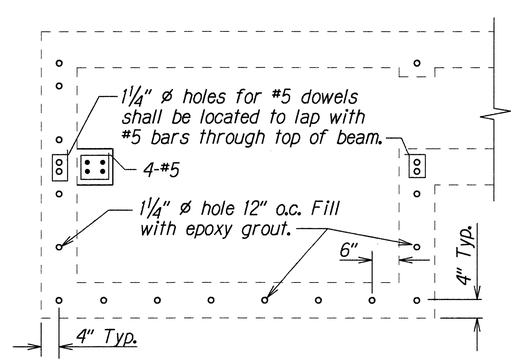

PLAN VIEW OF DOWEL LOCATIONS

NOTE

Only non-pneumatic type of drill as approved by the Engineer will be permitted for drilling holes in concrete. The approximate diameter of drilled holes for installation of dowels shall be 1¼ inches. After installing dowels the voids shall be filled with epoxy grout as directed by the Engineer. Above work shall be considered incidental to the various contract items.

DETAILS OF TYPE "X" CATCH BASIN AT ℄ STA. 30+40

DATE	REVISION
6/14/96	Details added to complete drainage plan.

STATE OF HAWAII
DEPARTMENT OF TRANSPORTATION
HIGHWAYS DIVISION

DRAINAGE DETAILS

KALANIANAOLE HIGHWAY RESURFACING
Kailua Rd. to Hilu St.
Project No. 72A-01-96M

Scale: ¾"=1'-0" Date: June, 1996

SHEET No. H12B OF 12 SHEETS

ADD. 55S-2

ORIGINAL PLAN | SURVEY PLOTTED BY | DRAWN BY L. Lindell A. Nomura | TRACED BY | DESIGNED BY R. Sakamoto | QUANTITIES BY | CHECKED BY | DATE 6/14/96
NOTE BOOK | 0/Ha.Bta | Rev. 0/0/0/0/0

FED. ROAD DIST. NO.	STATE	PROJ. NO.	FISCAL YEAR	SHEET NO.	TOTAL SHEETS
HAWAII	HAW.	72A-01-96M	1996	ADD. 55S-3	55

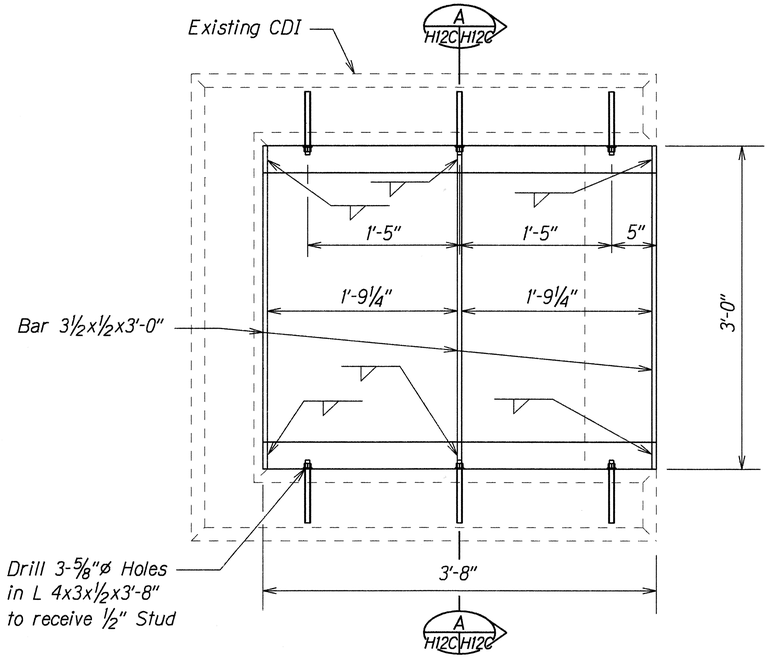

PLAN

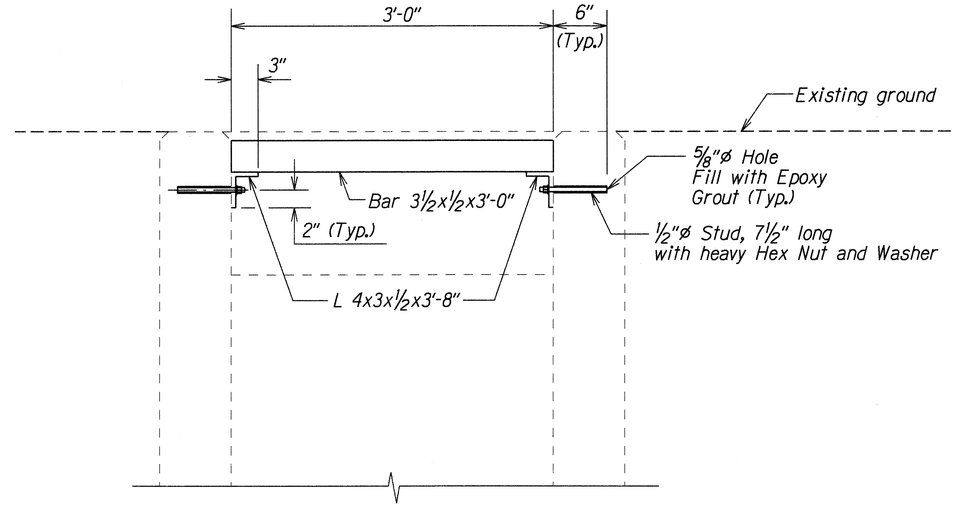

SECTION A H12C H12C

NOTES

1. Only non-pneumatic type of drill as approved by the Engineer will be permitted for drilling holes in concrete. The approximate diameter of drilled holes for installation of studs shall be ⅝ inches. After installing studs the voids shall be filled with epoxy grout as directed by the Engineer. Above work shall be considered incidental to the various contract items.
2. Frames and grates shall be hot dip galvanized after fabrication.
3. All welds 5/16" unless otherwise noted.

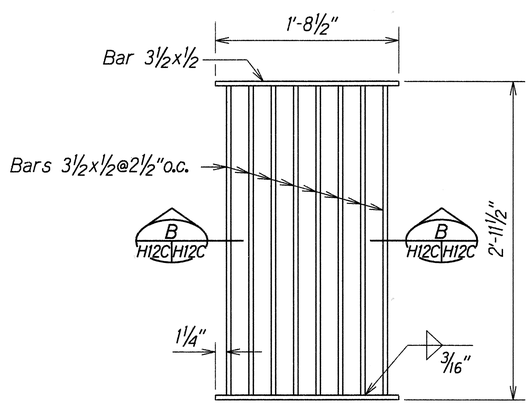

PLAN

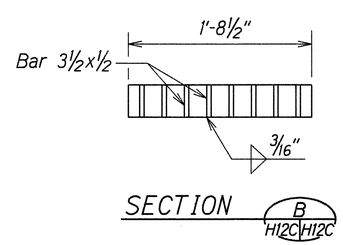

SECTION B H12C H12C

TYPE A-8 STEEL GRATE DETAILS

CONCRETE DROP INLET AT ℄ STA. 32+71± LT.

DATE	REVISION
6/14/96	Details added to complete drainage plan.

STATE OF HAWAII
DEPARTMENT OF TRANSPORTATION
HIGHWAYS DIVISION

DRAINAGE DETAILS

KALANIANAOLE HIGHWAY RESURFACING
Kailua Rd. to Hilu St.
Project No. 72A-01-96M

Scale: 1½"=1'-0" Date: May 1996

SHEET No. H12C OF 12 SHEETS

ORIGINAL PLAN	SURVEY PLOTTED BY	DATE 5/27/96
	DRAWN BY A. Nomura	
	TRACED BY	
NOTE BOOK	DESIGNED BY R. Sakamoto	
dh,sk,kg	QUANTITIES BY	
Rev. 10/1/96	CHECKED BY	

ADD. 55S–3

FED. ROAD DIST. NO.	STATE	PROJ. NO.	FISCAL YEAR	SHEET NO.	TOTAL SHEETS
HAWAII	HAW.	72A-01-96M	1996	ADD. 55S-4	55

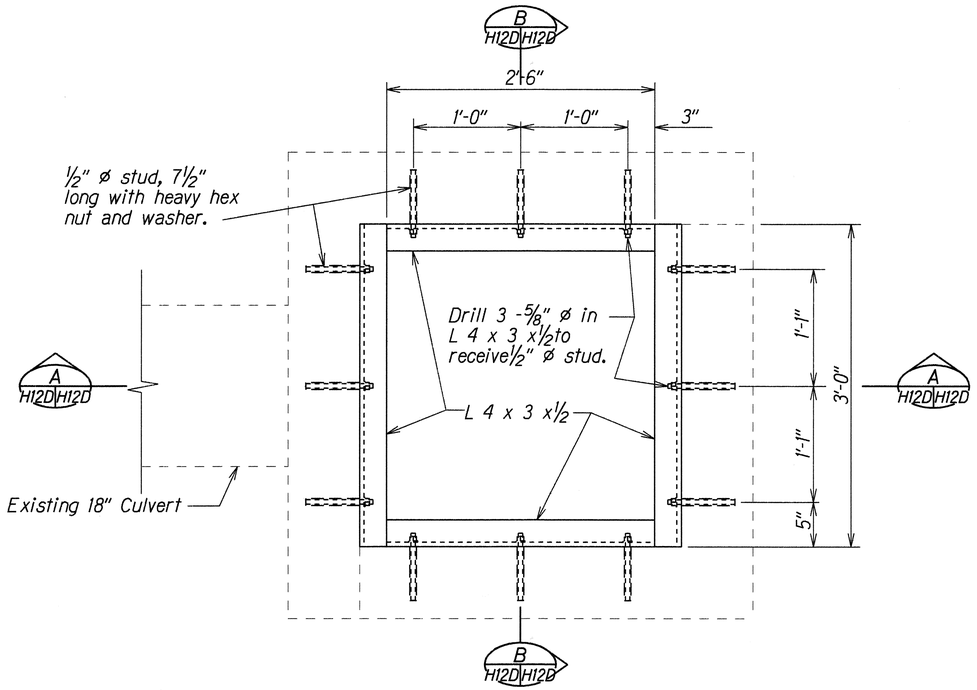

PLAN

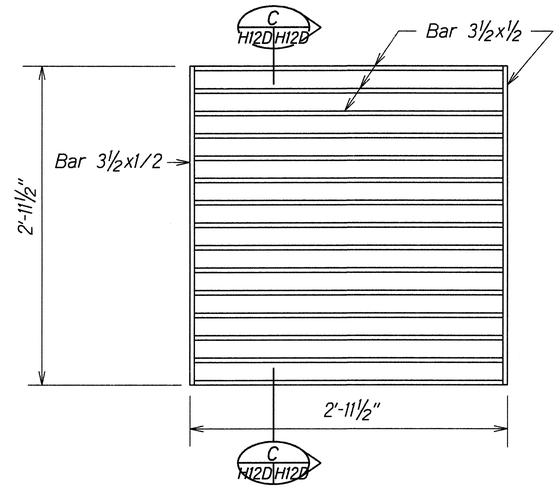

PLAN

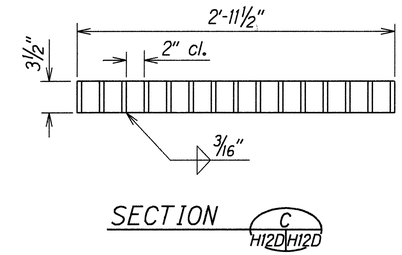

SECTION

TYPE A-15 STEEL GRATE DETAIL

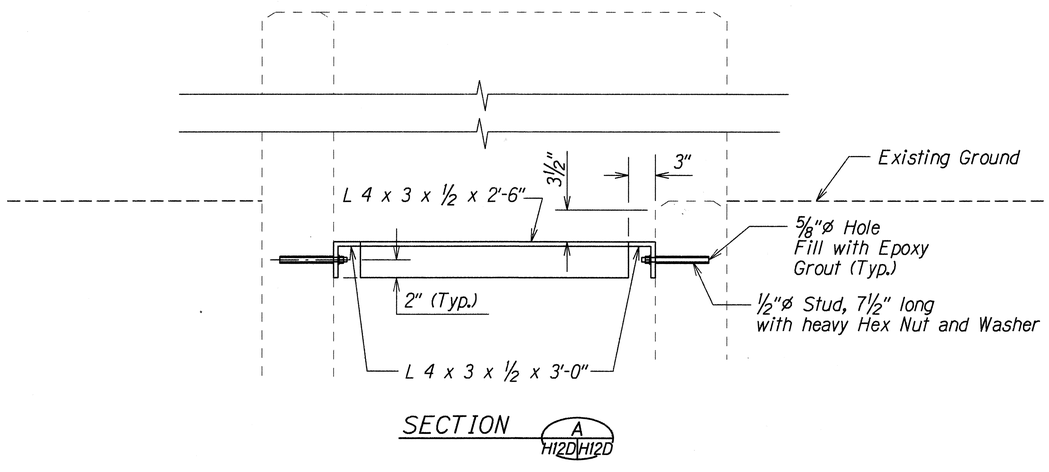

SECTION

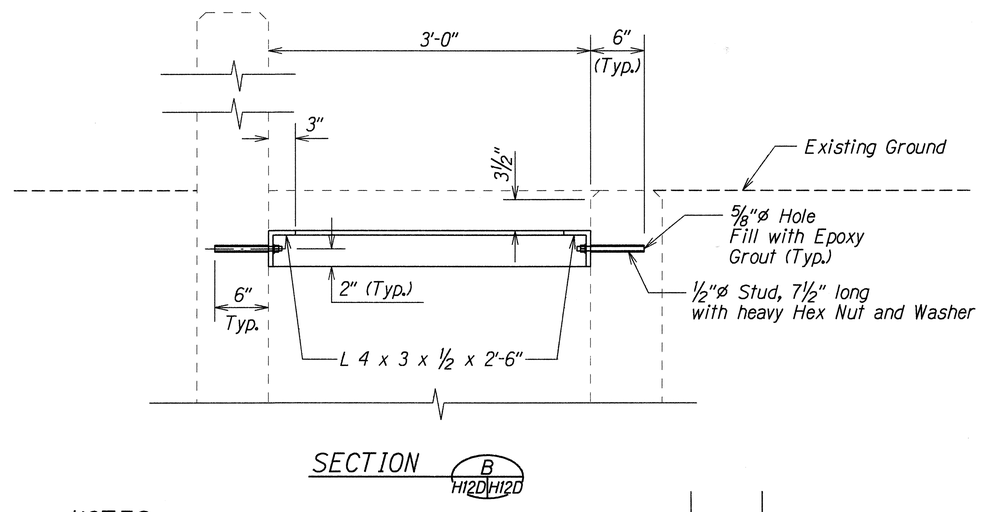

SECTION

NOTES

1. Only non-pneumatic type of drill as approved by the Engineer will be permitted for drilling holes in concrete. The approximate diameter of drilled holes for installation of studs shall be ⅝ inches. After installing studs the voids shall be filled with epoxy grout as directed by the Engineer. Above work shall be considered incidental to the various contract items.
2. Frames and grates shall be hot dip galvanized after fabrication.

DETAILS OF A-15 FRAME & GRATE IN CDI AT ℄ STA. 35+10 LT.

DATE	REVISION
6/14/96	Details added to complete drainage plan.

STATE OF HAWAII
DEPARTMENT OF TRANSPORTATION
HIGHWAYS DIVISION

DRAINAGE DETAILS

KALANIANAOLE HIGHWAY RESURFACING
Kailua Rd. to Hilu St.
Project No. 72A-01-96M

Scale: 1½"=1'-0" Date: June, 1996

SHEET No. H12D OF 12 SHEETS

ADD. 55S-4

ORIGINAL PLAN	SURVEY PLOTTED BY	DATE
	DRAWN BY J. Lokelani A. Nomura	6/14/96
NOTE BOOK	TRACED BY	
	DESIGNED BY R. Sakamoto	
	QUANTITIES BY	
	CHECKED BY	

FED. ROAD DIST. NO.	STATE	PROJ. NO.	FISCAL YEAR	SHEET NO.	TOTAL SHEETS
HAWAII	HAW.	72A-01-96M	1996	ADD. 55S-5	55

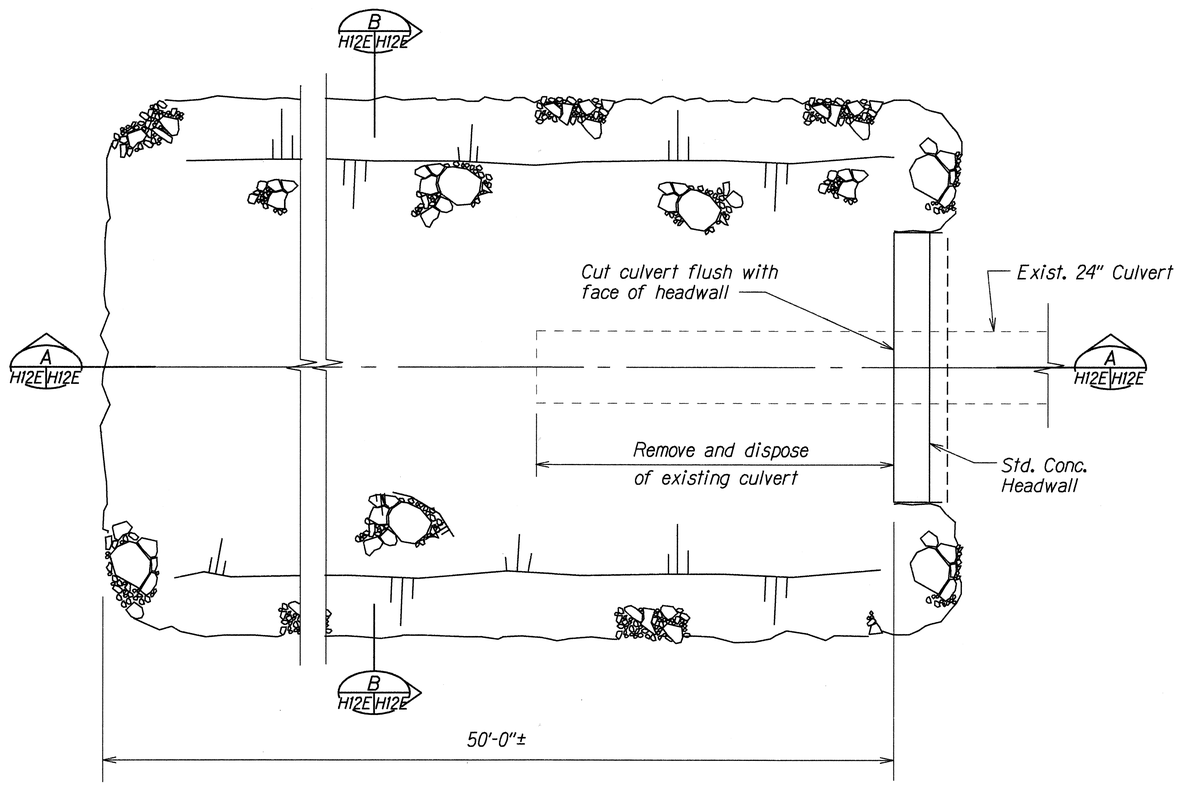

PLAN

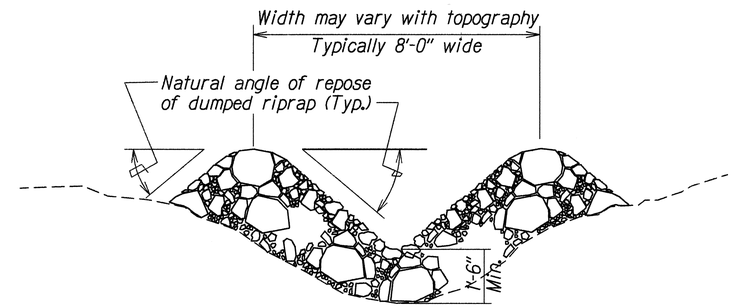

NOTE: Riprap shall be dumped loosely, hand placement of stones is not necessary.

DUMPED RIPRAP AT ℄ STA. 52+50± LT.

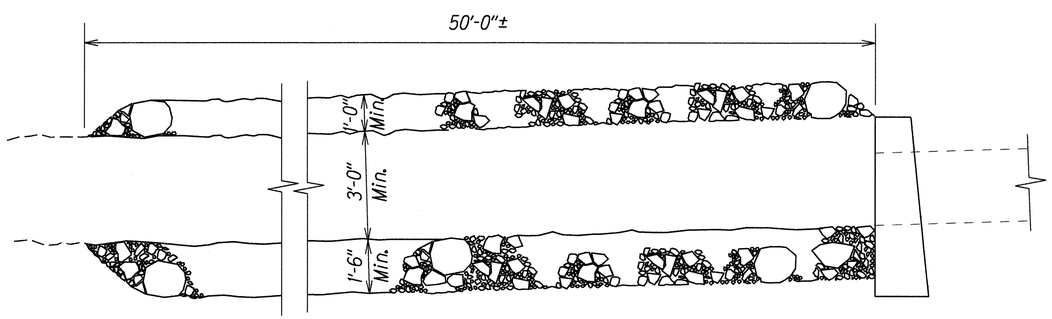

SECTION A H12E H12E

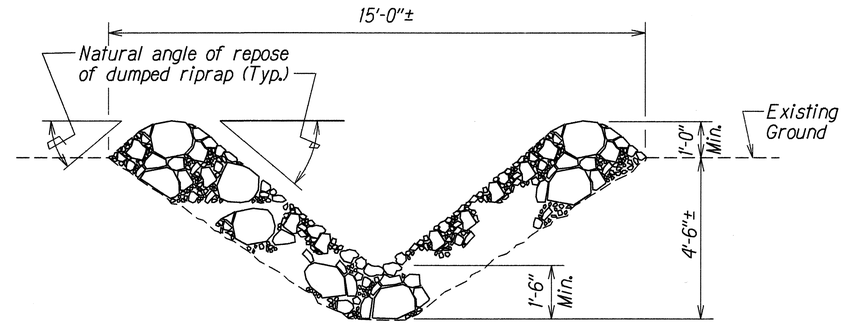

SECTION B H12E H12E

DUMPED RIPRAP IN EARTH DITCH AT ℄ STA. 34+40 LT.

DATE	REVISION
6/14/96	Details added to complete drainage plan.

STATE OF HAWAII
DEPARTMENT OF TRANSPORTATION
HIGHWAYS DIVISION

DRAINAGE DETAILS

KALANIANAOLE HIGHWAY RESURFACING
Kailua Rd. to Hilu St.
Project No. 72A-01-96M

Scale: ½"=1'-0" Date: May 1996

SHEET No. H12E OF 12 SHEETS

ADD. 55S-5

ORIGINAL PLAN
SURVEY PLOTTED BY
DRAWN BY A. Nakata
PLANS PREPARED BY
DESIGNED BY R. Sakamoto
QUANTITIES BY
CHECKED BY
DATE 5/27/96
NOTE BOOK

FED. ROAD DIST. NO.	STATE	PROJ. NO.	FISCAL YEAR	SHEET NO.	TOTAL SHEETS
HAWAII	HAW.	72A-01-96M	1996	ADD. 55S-6	55

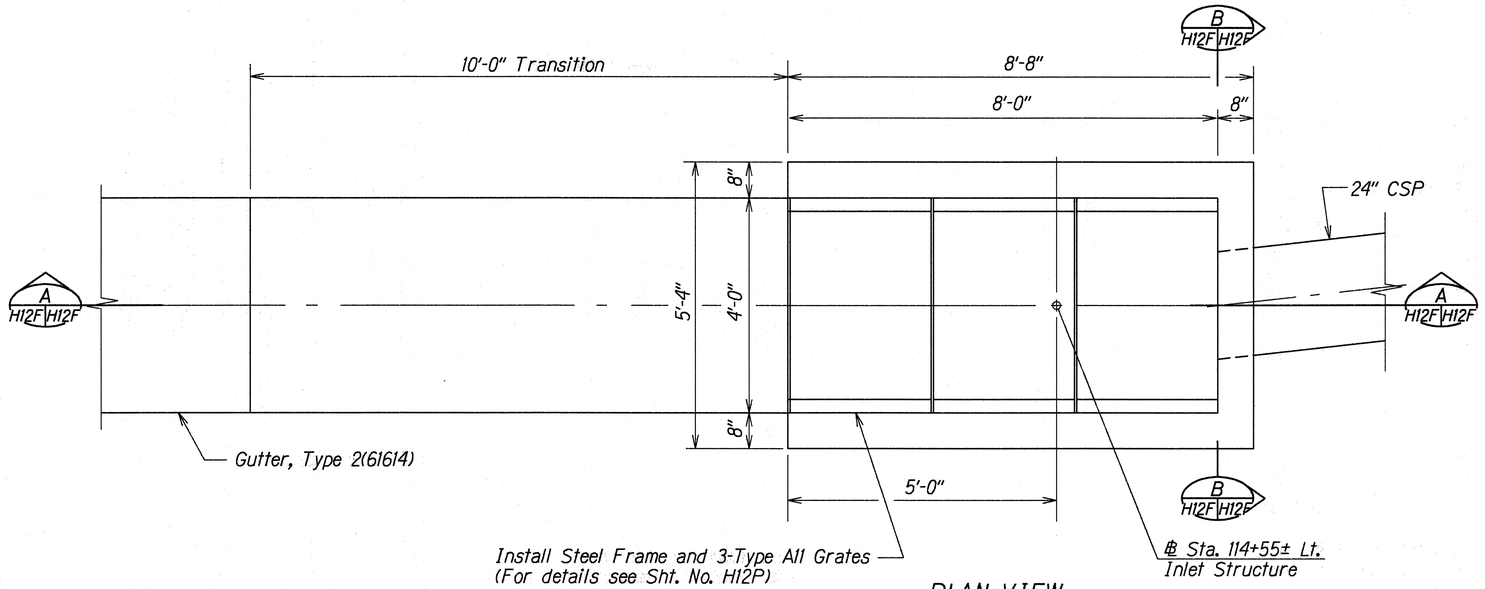

PLAN VIEW

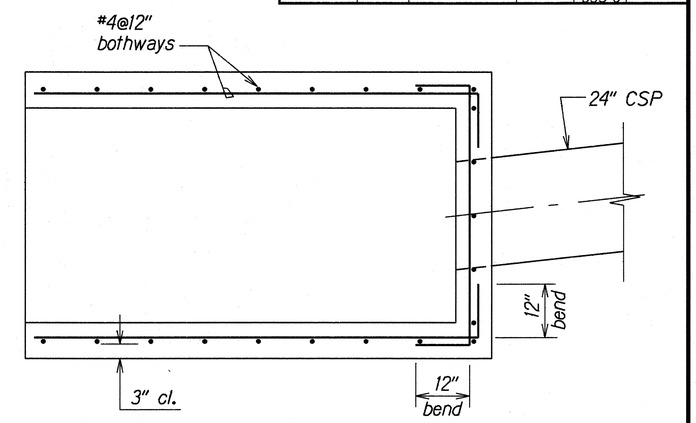

PLAN VIEW OF WALL REINFORCING

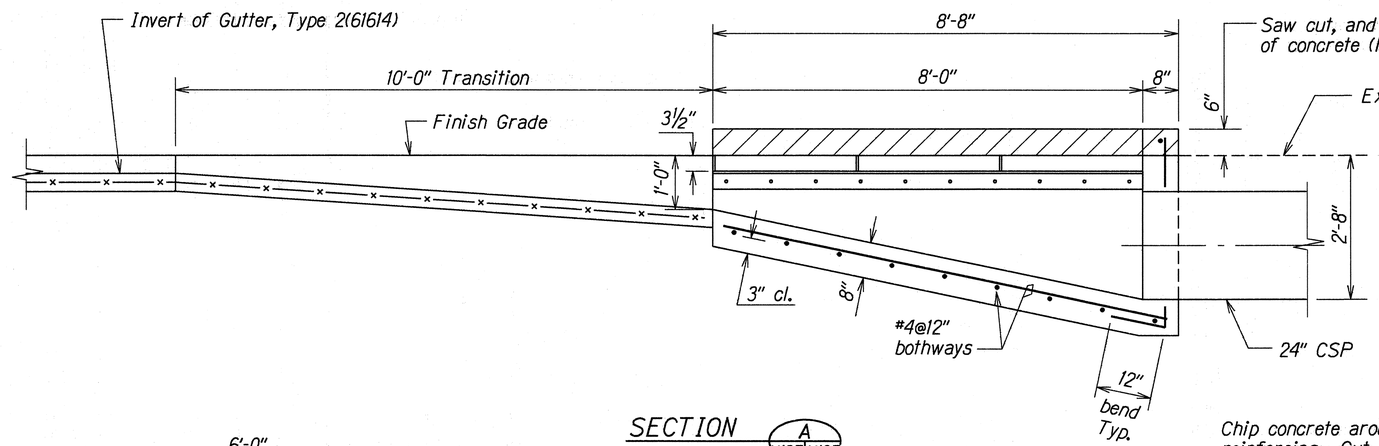

SECTION A H12F H12F

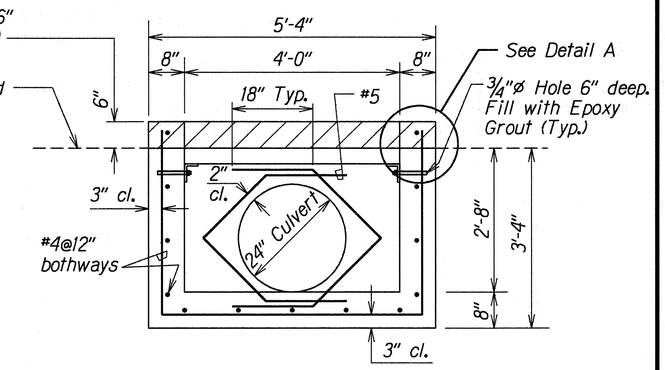

SECTION B H12F H12F

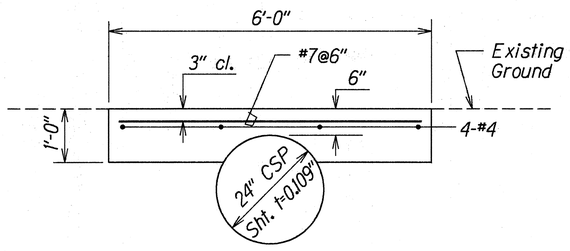

LOAD DISTRIBUTION PAD

NOTE

Only non-pneumatic type of drill as approved by the Engineer will be permitted for drilling holes in concrete. The approximate diameter of drilled holes for installation of studs shall be ¾ inches. After installing studs the voids shall be filled with epoxy grout as directed by the Engineer. Above work shall be considered incidental to the various contract items.

Chip concrete around existing reinforcing. Cut reinforcing bar 1" below saw cut. Fill chipped out area with epoxy mortar.

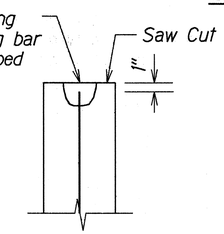

DETAIL A
Scale: 1½"=1'-0"

INLET STRUCTURE AT ℄ STA. 114+55± LT.

DATE	REVISION
4/15/97	Revised Inlet Structure for safety.
6/14/96	Details added to complete drainage plan.

STATE OF HAWAII
DEPARTMENT OF TRANSPORTATION
HIGHWAYS DIVISION

DRAINAGE DETAILS

KALANIANAOLE HIGHWAY RESURFACING
Kailua Rd. to Hilu St.
Project No. 72A-01-96M

Scale: ¾"=1'-0" Date: May 1996

SHEET No. H12F OF 12 SHEETS

ORIGINAL PLAN	SURVEY PLOTTED BY	DATE 5/27/96
	DRAWN BY A. Nomura	
	TRACED BY	
NOTE BOOK	DESIGNED BY R. Sakamoto	
dh.ai.8ial	QUANTITIES BY	
8(Wed/04/dgy)	CHECKED BY	

C.O. ADD. 55S–6

FED. ROAD DIST. NO.	STATE	PROJ. NO.	FISCAL YEAR	SHEET NO.	TOTAL SHEETS
HAWAII	HAW.	72A-01-96M	1996	ADD. 55S-7	55

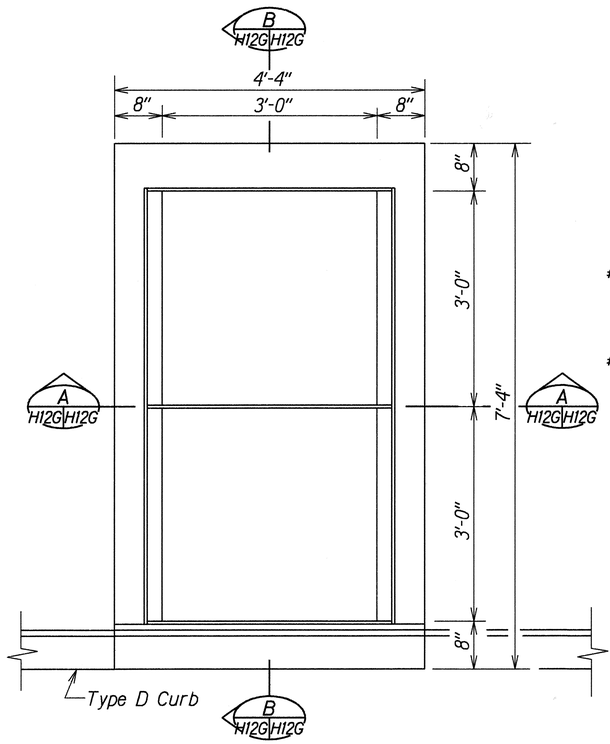

PLAN

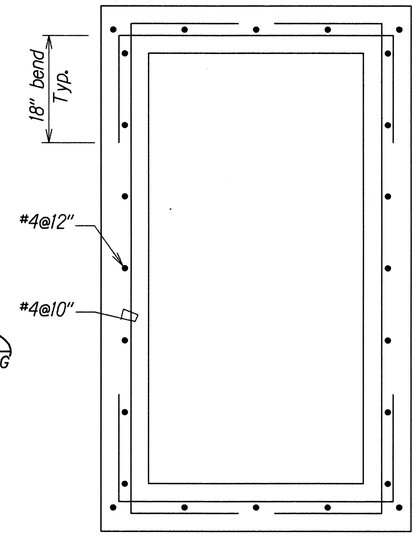

PLAN VIEW OF WALL REINFORCING

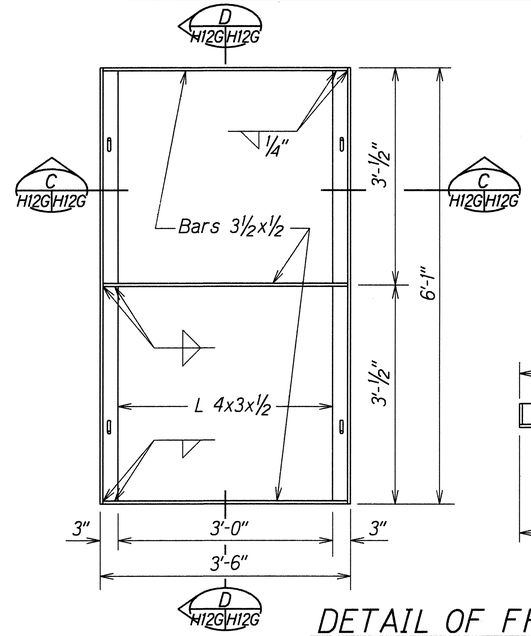

PLAN

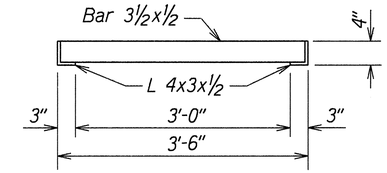

SECTION C H12G H12G

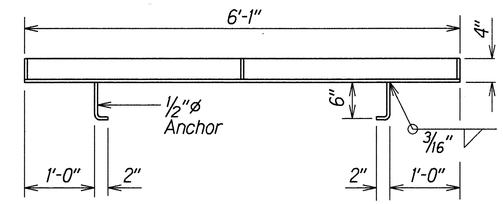

SECTION D H12G H12G

DETAIL OF FRAME

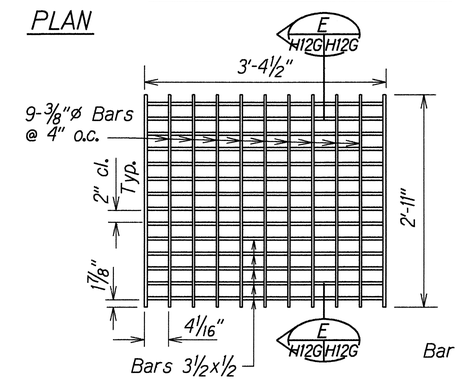

PLAN

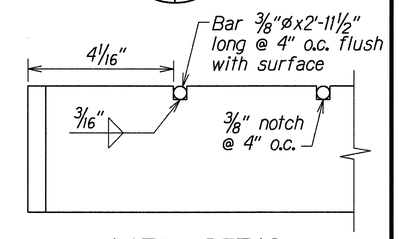

NOTCH DETAIL
Scale: 6"=1'-0"

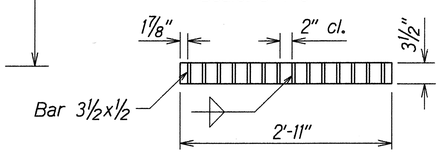

SECTION E H12G H12G

DETAIL OF GRATE

NOTES:
1. All welds ⅜" unless otherwise noted.
2. Frame and grates shall be hot dip galvanized after fabrication.

STEEL FRAME AND GRATE DETAILS

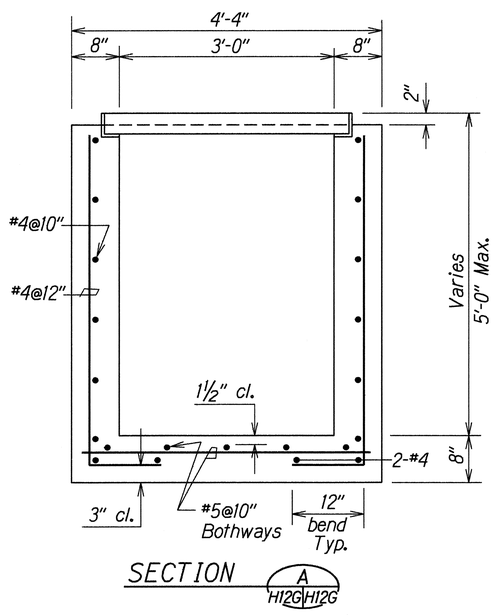

SECTION A H12G H12G

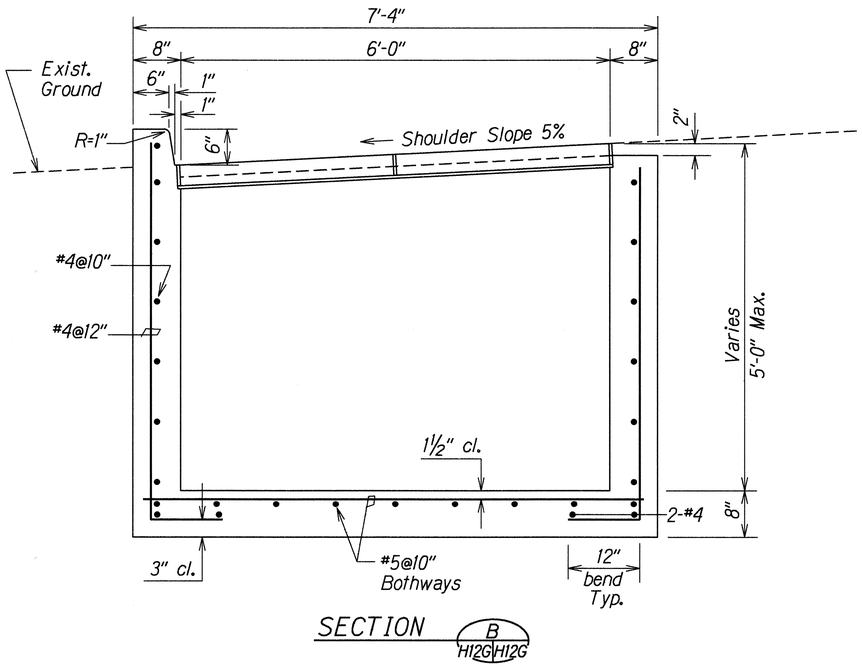

SECTION B H12G H12G

TYPE 00006 GDI DETAILS

DATE	REVISION
6/14/96	Details added to complete drainage plan.

STATE OF HAWAII
DEPARTMENT OF TRANSPORTATION
HIGHWAYS DIVISION

DRAINAGE DETAILS

KALANIANAOLE HIGHWAY RESURFACING
Kailua Rd. to Hilu St.
Project No. 72A-01-96M

Scale: 1"=1'-0" Date: May 1996

SHEET No. H12G OF 12 SHEETS

ADD 55S-7

ORIGINAL PLAN	SURVEY PLOTTED BY	DATE 5/27/96
	DRAWN BY A. Nimura	
	TRACED BY	
NOTE BOOK d/Ma.Bsl. & Miscellaneous	DESIGNED BY R. Sakamoto	
	QUANTITIES BY	
	CHECKED BY	

FED. ROAD DIST. NO.	STATE	PROJ. NO.	FISCAL YEAR	SHEET NO.	TOTAL SHEETS
HAWAII	HAW.	72A-01-96M	1996	ADD. 55S-8	55

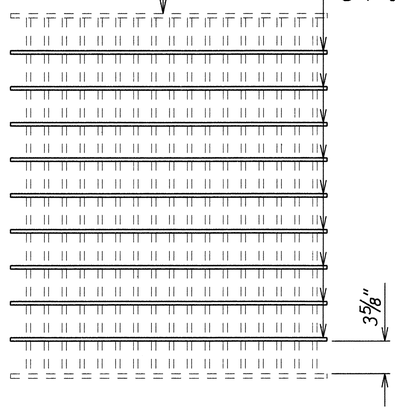

PLAN
Scale: 1 1/2"=1'-0"

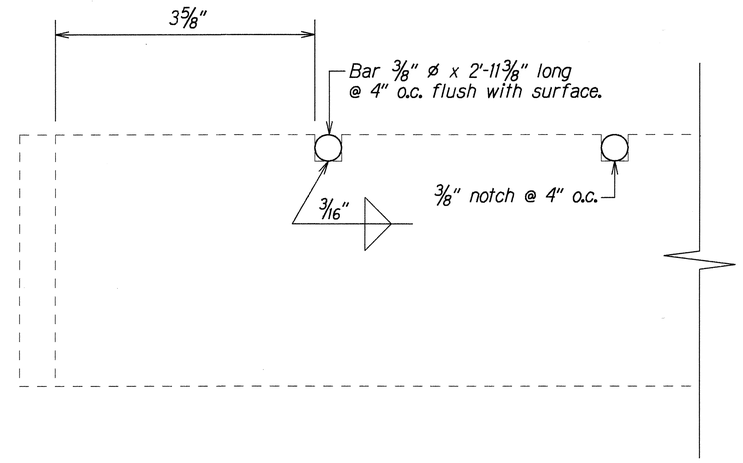

NOTCH DETAIL
Scale: Full Size

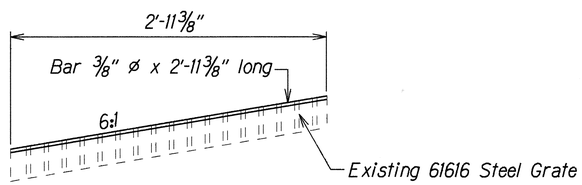

SECTION
Scale: 1 1/2"=1'-0"

NOTE:

1. Existing Drainage System shall be functional at all times.
2. Grated Drop Inlets shall not be left open while the existing grates are being modified.
3. The grate shall be cleaned of all rust and bent bars shall be straightened before the notches are cut.
4. The grate shall be galvanized after the 3/8" ø bars are welded into the notches.
5. Grates shall fit into the frames of existing grated drop inlets without rocking. Any adjustments to the grate shall be done before galvanizing.

61616M STEEL GRATE DETAILS

ORIGINAL PLAN	SURVEY PLOTTED BY	DATE 5/22/96
	DRAWN BY R. Sato, A. Nimura	
NOTE BOOK	PLOTTED BY	
	DESIGNED BY R. Sakamoto	
	QUANTITIES BY	
	CHECKED BY	

DATE	REVISION
6/14/96	Details added to complete drainage plan.

STATE OF HAWAII
DEPARTMENT OF TRANSPORTATION
HIGHWAYS DIVISION

DRAINAGE DETAILS

KALANIANAOLE HIGHWAY RESURFACING
Kailua Rd. to Hilu St.
Project No. 72A-01-96M

Scale: As Shown Date: May 1996

SHEET No. H12H OF 12 SHEETS

ADD. 55S-8

FED. ROAD DIST. NO.	STATE	PROJ. NO.	FISCAL YEAR	SHEET NO.	TOTAL SHEETS
HAWAII	HAW.	72A-01-96M	1996	ADD. 55S-9	55

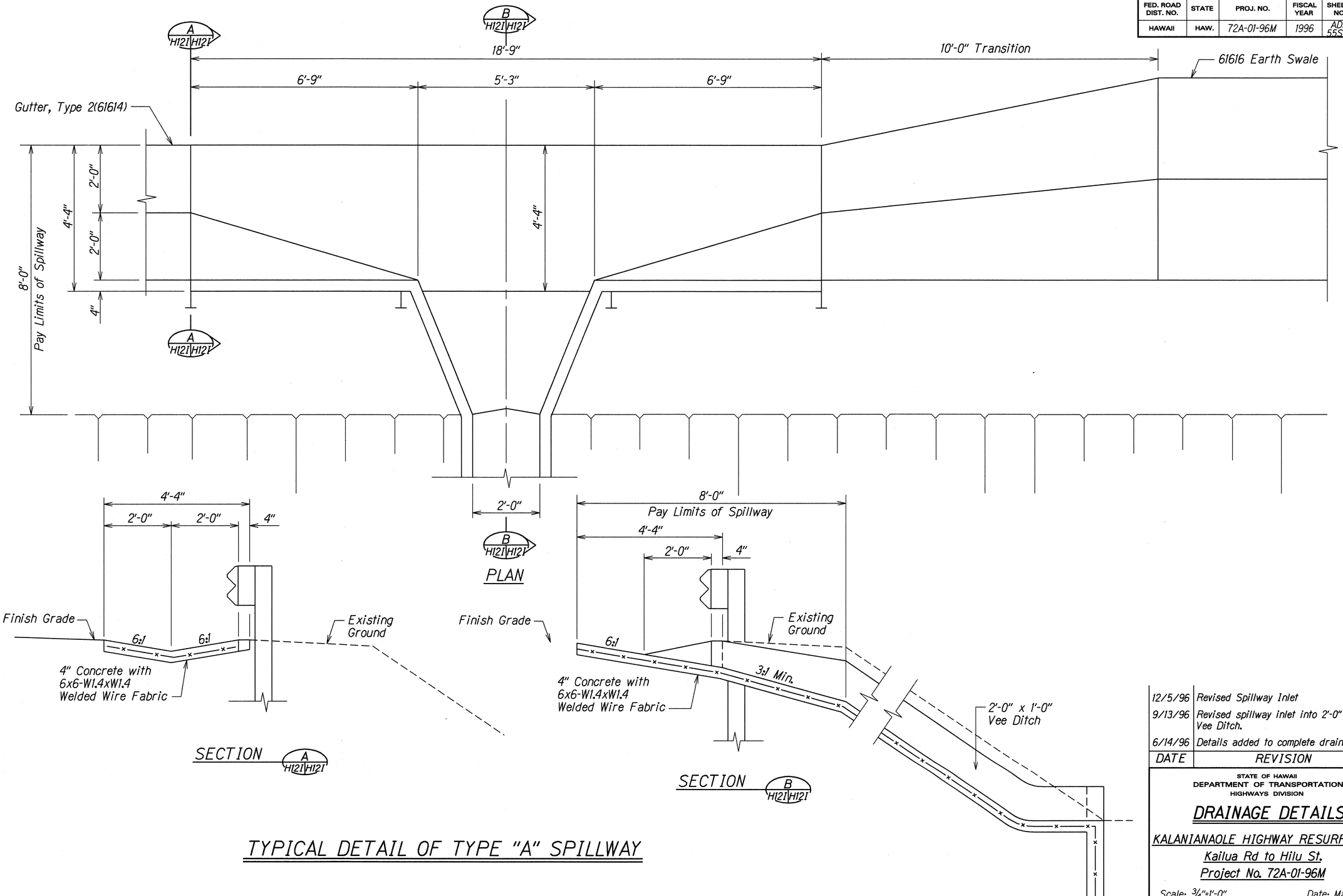

TYPICAL DETAIL OF TYPE "A" SPILLWAY

ORIGINAL PLAN	SURVEY PLOTTED BY	DATE 12/5/96
	DRAWN BY A. Nimura	
	TRACED BY	
NOTE BOOK	DESIGNED BY R. Sakamoto	
ch-ch-ch	QUANTITIES BY	
Kawamoto	CHECKED BY	

DATE	REVISION
12/5/96	Revised Spillway Inlet
9/13/96	Revised spillway inlet into 2'-0" x 1'-0" Vee Ditch.
6/14/96	Details added to complete drainage plan.

STATE OF HAWAII
DEPARTMENT OF TRANSPORTATION
HIGHWAYS DIVISION

DRAINAGE DETAILS

KALANIANAOLE HIGHWAY RESURFACING
Kailua Rd to Hilu St.
Project No. 72A-01-96M

Scale: 3/4"=1'-0" Date: May, 1996

SHEET No. H121 OF 12 SHEETS

C.O. ADD. 55S–9

FED. ROAD DIST. NO.	STATE	PROJ. NO.	FISCAL YEAR	SHEET NO.	TOTAL SHEETS
HAWAII	HAW.	72A-01-96M	1996	ADD. 55S-10	55

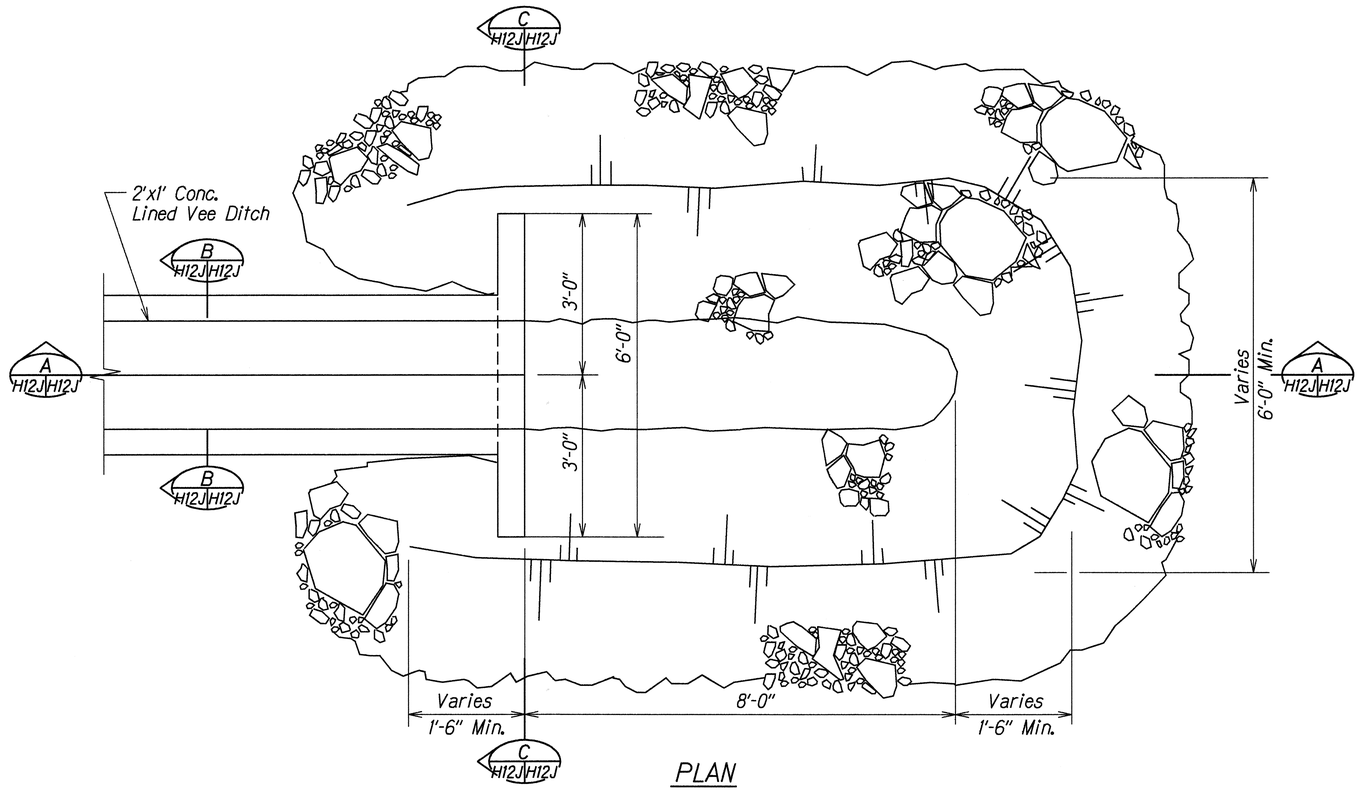

PLAN

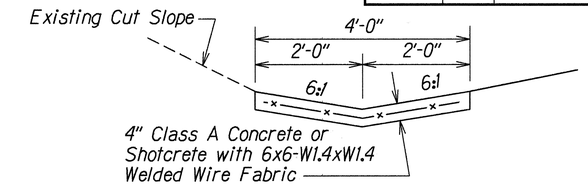

GUTTER, TYPE 2(61614) DETAIL

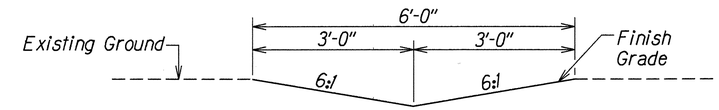

DETAIL OF 61616 EARTH SWALE

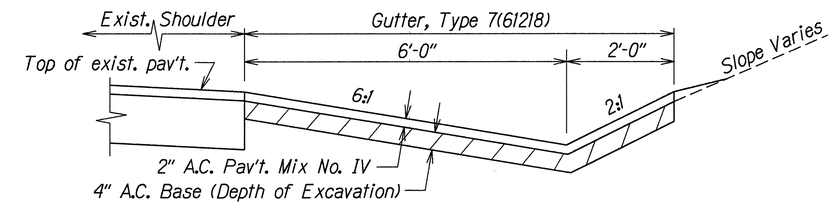

GUTTER, TYPE 7(61218) DETAIL

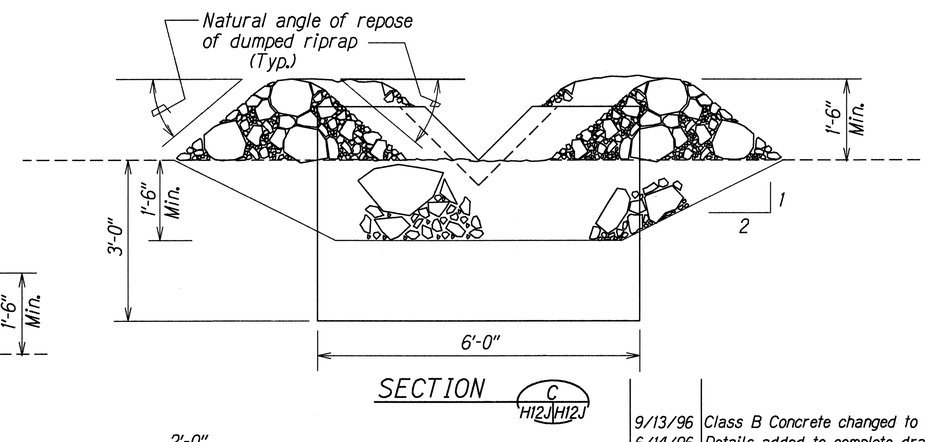

SECTION

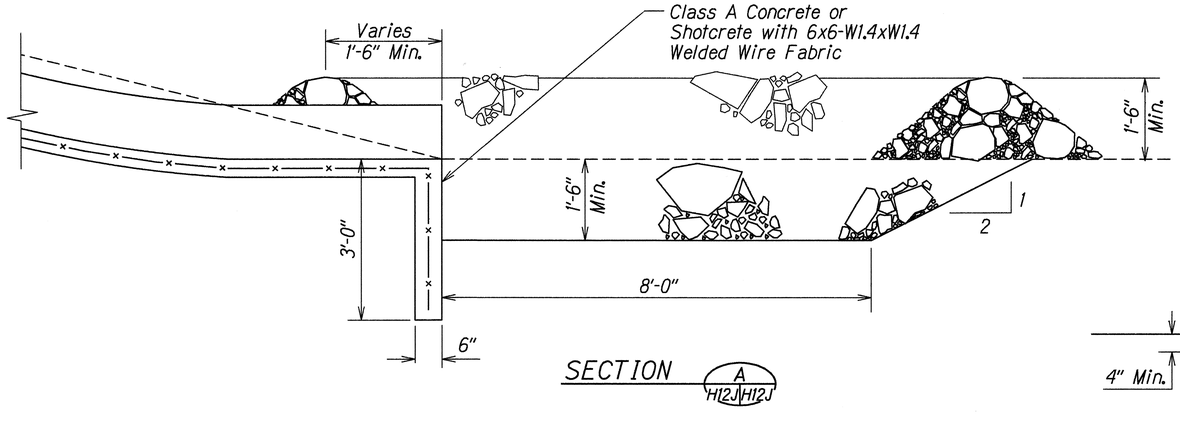

SECTION

2'x1' CONCRETE LINED VEE DITCH

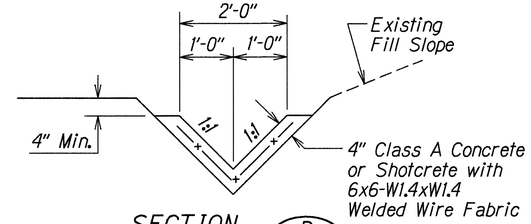

SECTION

DATE	REVISION
9/13/96	Class B Concrete changed to Class A.
6/14/96	Details added to complete drainage plan.

STATE OF HAWAII
DEPARTMENT OF TRANSPORTATION
HIGHWAYS DIVISION

DRAINAGE DETAILS

KALANIANAOLE HIGHWAY RESURFACING
Kailua Rd. to Hilu St.
Project No. 72A-01-96M

Scale: 3/4"=1'-0" Date: May 1996

SHEET No. H12J OF 12 SHEETS

ORIGINAL PLAN

SURVEY PLOTTED BY
DRAWN BY A. Nakura DATE 5/27/96
TRACED BY
DESIGNED BY R. Sakamoto
NOTE BOOK
QUANTITIES BY
CHECKED BY

C.O. ADD. 55S-10

FED. ROAD DIST. NO.	STATE	FED. AID PROJ. NO.	FISCAL YEAR	SHEET NO.	TOTAL SHEETS
HAWAII	HAW.	72A-01-96M	1996	C.O. 55S-11	55

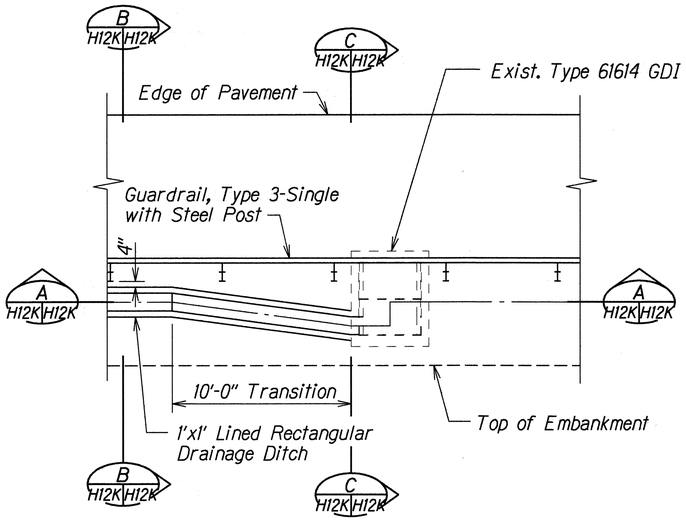

PLAN
Scale: 1/4"=1'-0"

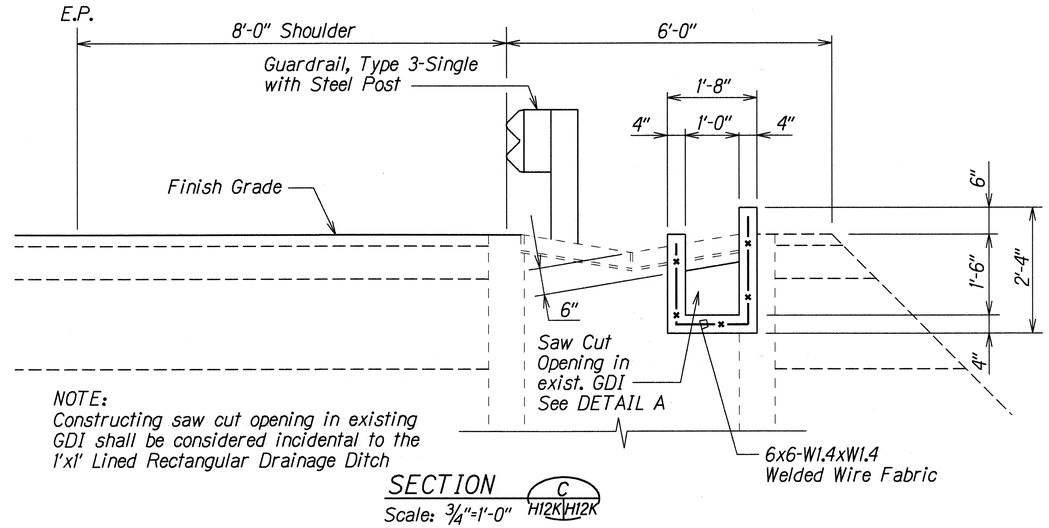

NOTE:
Constructing saw cut opening in existing GDI shall be considered incidental to the 1'x1' Lined Rectangular Drainage Ditch

SECTION C HI2K HI2K
Scale: 3/4"=1'-0"

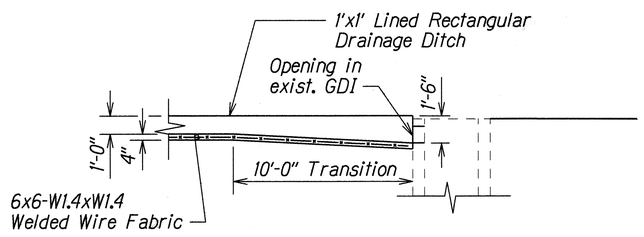

SECTION A HI2K HI2K
Scale: 1/4"=1'-0"

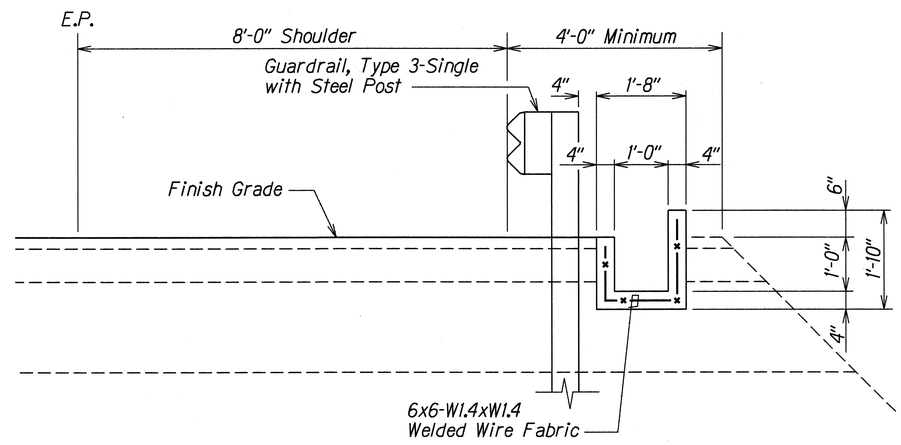

SECTION B HI2K HI2K
Scale: 3/4"=1'-0"

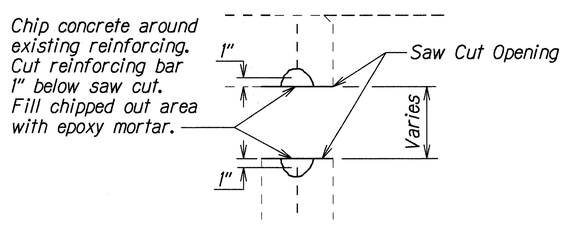

DETAIL A
Scale: 1 1/2"=1'-0"

DETAIL OF 1' x 1' LINED RECTANGULAR DRAINAGE DITCH

DATE	REVISION
12/5/96	Delete Portion of 1'x1' Lined Rectangular Drainage Ditch.
9/13/96	Sheet added to show details of 1'x1' Lined Rectangular Drainage Ditch.

STATE OF HAWAII
DEPARTMENT OF TRANSPORTATION
HIGHWAYS DIVISION

DRAINAGE DETAILS

KALANIANAOLE HIGHWAY RESURFACING
Kailua Rd. to Hilu St.
Project No. 72A-01-96M

Scale: As Shown Date: Jul. 1996

SHEET No. HI2K OF 12 SHEETS

C.O. 55S-11

ORIGINAL PLAN	SURVEY PLOTTED BY	DATE 7/24/96
	DRAWN BY L. Takashi A. Nomura	
	TRACED BY	
NOTE BOOK dHI-816 dHI-819	DESIGNED BY R. Sakamoto	
	QUANTITIES BY	
	CHECKED BY	

FED. ROAD DIST. NO.	STATE	FED. AID PROJ. NO.	FISCAL YEAR	SHEET NO.	TOTAL SHEETS
HAWAII	HAW.	72A-01-96M	1997	C.O. 55S-12	55

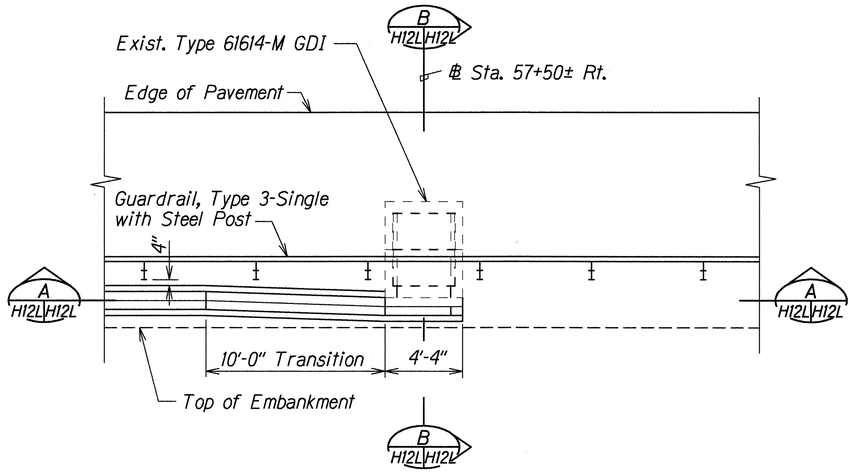

PLAN
Scale: 1/4"=1'-0"

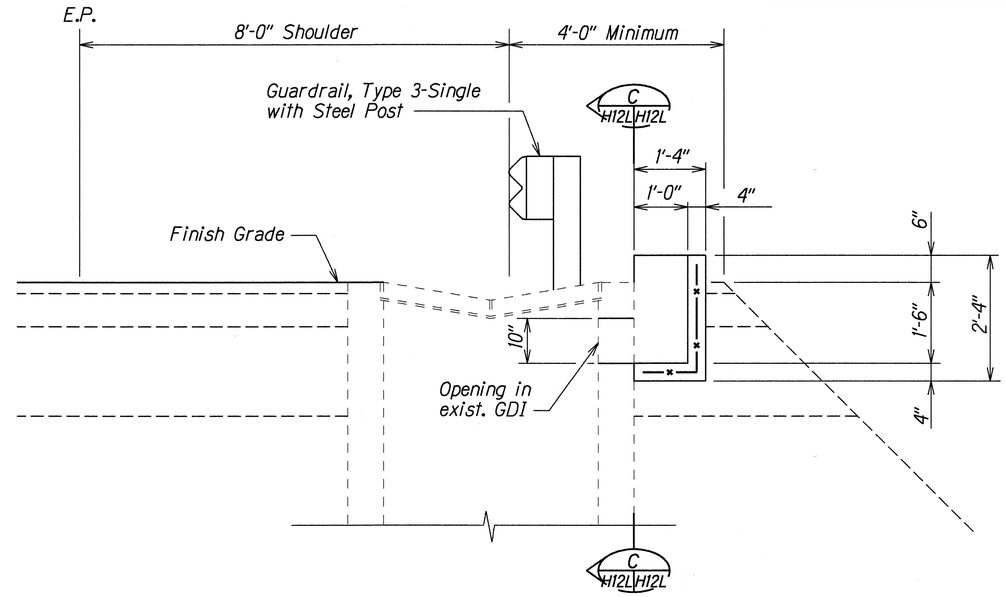

SECTION B H12L H12L
Scale: 3/4"=1'-0"

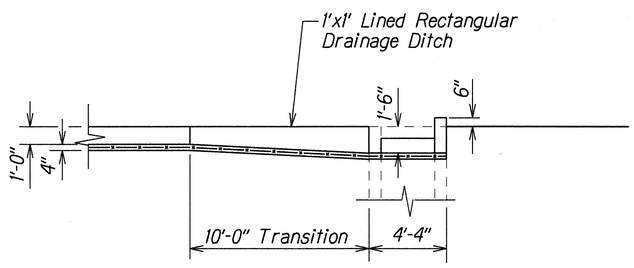

SECTION A H12L H12L
Scale: 1/4"=1'-0"

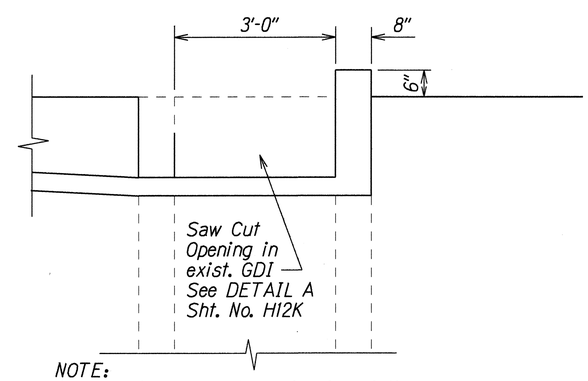

NOTE:
Constructing saw cut opening in existing GDI shall be considered incidental to the 1'x1' Lined Rectangular Drainage Ditch

SECTION C H12L H12L
Scale: 3/4"=1'-0"

12/5/96	Revised Transition of 1'x1' Lined Rectangular Drainage Ditch.
9/13/96	Sheet added to show details of 1'x1' Lined Rectangular Drainage Ditch Transition at ℄ Sta. 57+50± Rt.
DATE	REVISION

STATE OF HAWAII
DEPARTMENT OF TRANSPORTATION
HIGHWAYS DIVISION

DRAINAGE DETAILS

KALANIANAOLE HIGHWAY RESURFACING
Kailua Rd. to Hilu St.
Project No. 72A-01-96M

Scale: As Shown Date: Jul. 1996

SHEET No. H12L OF 12 SHEETS

ORIGINAL PLAN
SURVEY PLOTTED BY
DRAWN BY Lowell A. Nomura DATE 7/24/96
TRACED BY
DESIGNED BY R. Sakamoto
NOTE BOOK
QUANTITIES BY
CHECKED BY

DETAILS OF 1' x 1' LINED RECTANGULAR DRAINAGE DITCH TRANSITION AT ℄ STA. 57+50± RT.

C.O. 55S-12

FED. ROAD DIST. NO.	STATE	PROJ. NO.	FISCAL YEAR	SHEET NO.	TOTAL SHEETS
HAWAII	HAW.	72A-01-96M	1997	C.O. 55S-13	55

TRUE NORTH
SCALE : 1" = 40'

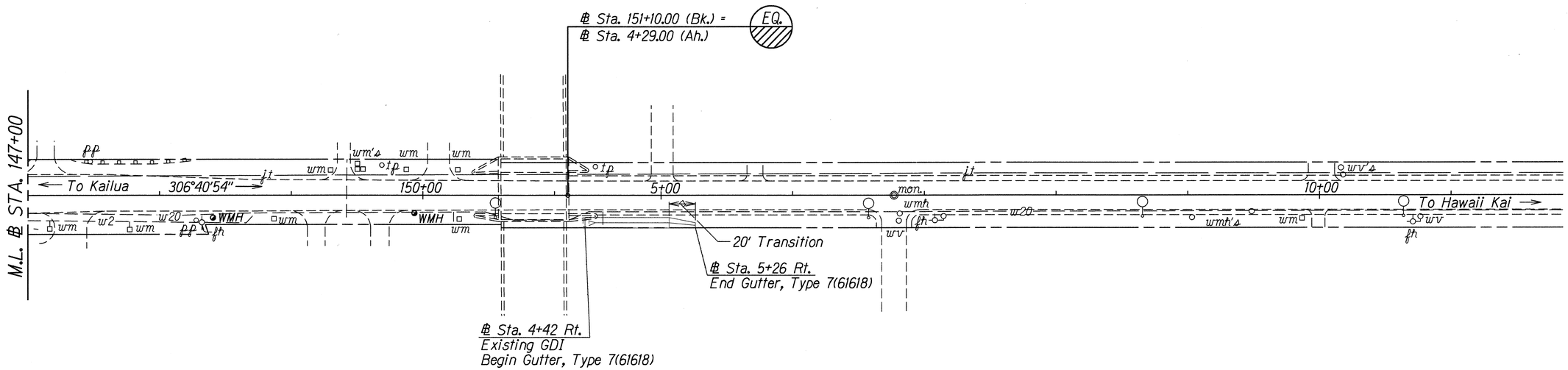

℄ Sta. 4+42 Rt. to ℄ Sta. 5+26 Rt.
Construct: Gutter, Type 7(61618)
(For Details see Sht. No. H120)
Estimated Quantities
Gutter, Type 7(61618) = 84 L.F.

DATE	REVISION
9/13/96	Added Drainage Plan

STATE OF HAWAII
DEPARTMENT OF TRANSPORTATION
HIGHWAYS DIVISION

DRAINAGE PLAN

KALANIANAOLE HIGHWAY RESURFACING
Kailua Rd. to Hilu St.
Project No. 72A-01-96M

Scale: 1"=40' Date: Aug. 1996

SHEET No. H12M OF 12 SHEETS

C.O. 55S-13

ORIGINAL PLAN
SURVEY PLOTTED BY ____ DATE 12/21/95
DRAWN BY A. Nomura
TRACED BY ____
DESIGNED BY R. Sakamoto
QUANTITIES BY ____
CHECKED BY ____
NOTE BOOK
Ohai Beal
Nº Bridge Bldg

FED. ROAD DIST. NO.	STATE	PROJ. NO.	FISCAL YEAR	SHEET NO.	TOTAL SHEETS
HAWAII	HAW.	72A-01-96M	1997	C.O. 55S-14	55

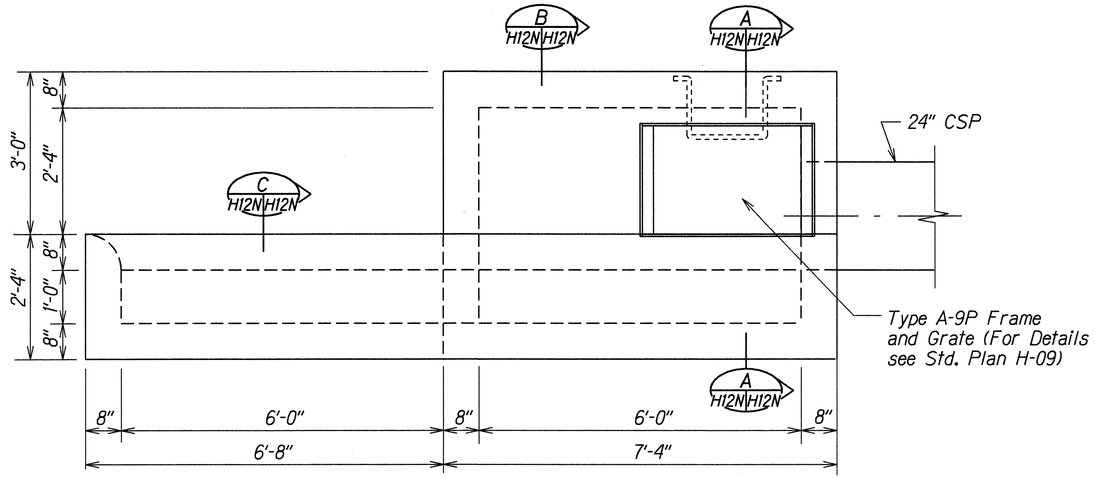

PLAN

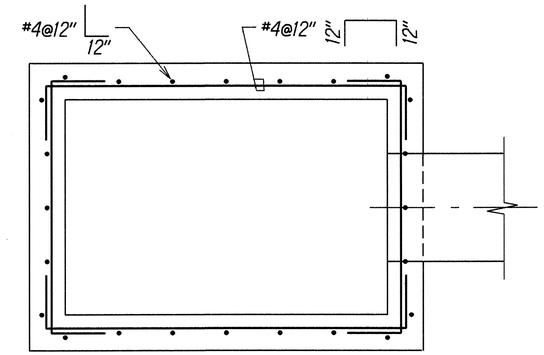

PLAN VIEW FOR WALL REINFORCING

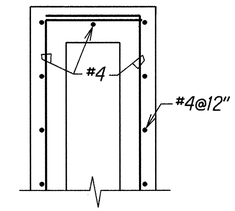

SECTION D H12N H12N

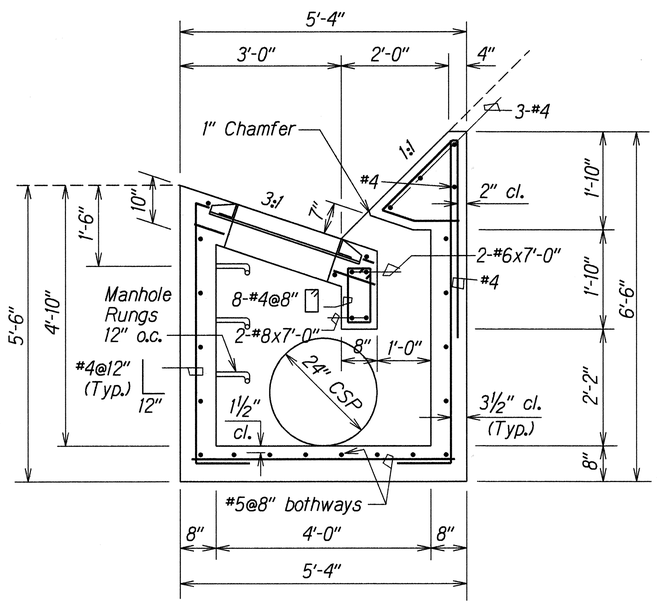

SECTION A H12N H12N

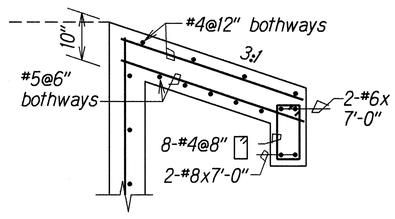

SECTION B H12N H12N

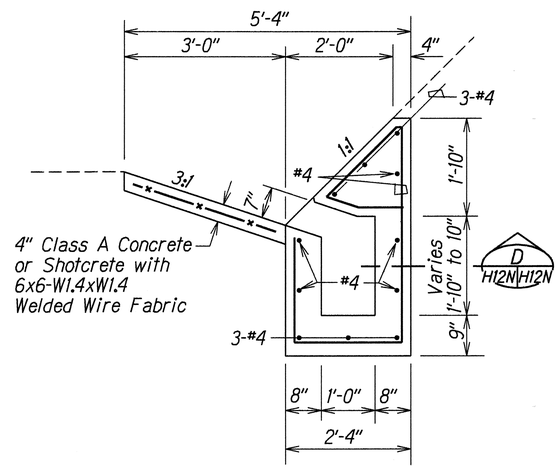

SECTION C H12N H12N

DATE	REVISION
9/13/96	Added Details of Type "CX" C.B.

STATE OF HAWAII
DEPARTMENT OF TRANSPORTATION
HIGHWAYS DIVISION

DRAINAGE DETAILS

KALANIANAOLE HIGHWAY RESURFACING
Kailua Rd. to Hilu St.
Project No. 72A-01-96M

Scale: ¾"=1'-0" Date: Aug. 1996

SHEET No. H12N OF 12 SHEETS

ORIGINAL PLAN | SURVEY PLOTTED BY | DRAWN BY J. Nomura | TRACED BY | DESIGNED BY R. Sakamoto | QUANTITIES BY | CHECKED BY | DATE 8/12/96 | NOTE BOOK | APPROVED BY

DETAILS OF TYPE "CX" C.B. AT ℄ STA. 53+25 RT.

C.O. 55S–14

FED. ROAD DIST. NO.	STATE	PROJ. NO.	FISCAL YEAR	SHEET NO.	TOTAL SHEETS
HAWAII	HAW.	72A-01-96M	1997	C.O. 55S-15	55

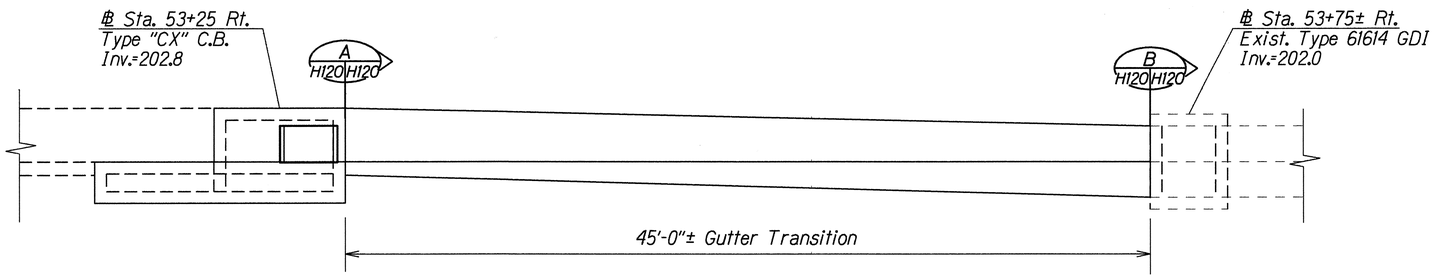

PLAN
Scale: 1/4"=1'-0"

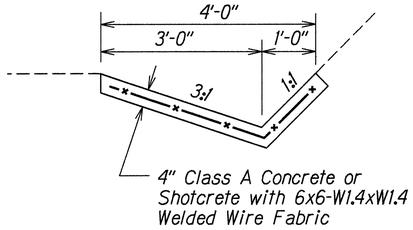

SECTION A H120 H120
Scale: 3/4"=1'-0"

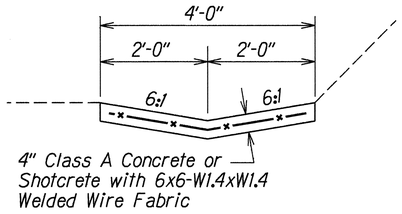

SECTION B H120 H120
Scale: 3/4"=1'-0"

GUTTER RECONSTRUCTION DETAILS

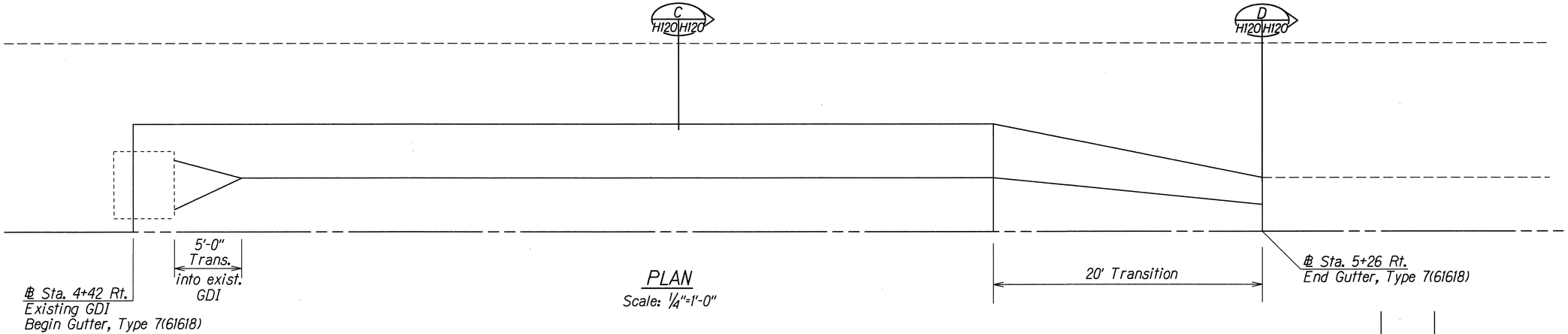

PLAN
Scale: 1/4"=1'-0"

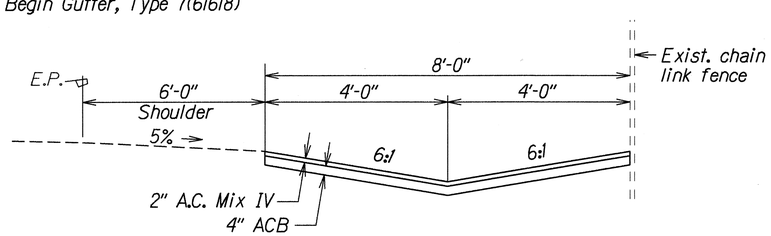

SECTION C H120 H120
Scale: 3/8"=1'-0"

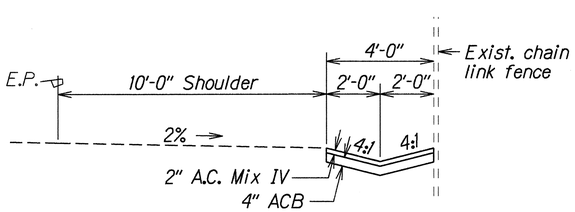

SECTION D H120 H120
Scale: 3/8"=1'-0"

GUTTER, TYPE 7(61618) DETAILS

DATE	REVISION
9/13/96	Added Gutter Reconstruction Details

STATE OF HAWAII
DEPARTMENT OF TRANSPORTATION
HIGHWAYS DIVISION

DRAINAGE DETAILS

KALANIANAOLE HIGHWAY RESURFACING
Kailua Rd. to Hilu St.
Project No. 72A-01-96M

Scale: As Shown Date: Aug. 1996

SHEET No. H120 OF 12 SHEETS

ORIGINAL PLAN	SURVEY PLOTTED BY	DATE 8/12/96
	DRAWN BY J. Nakata	
	TRACED BY	
NOTE BOOK	DESIGNED BY Y. Sakamoto	
	QUANTITIES BY	
	CHECKED BY	

C.O. 55S-15

FED. ROAD DIST. NO.	STATE	PROJ. NO.	FISCAL YEAR	SHEET NO.	TOTAL SHEETS
HAWAII	HAW.	72A-01-96M	1996	C.O. 55S-16	55

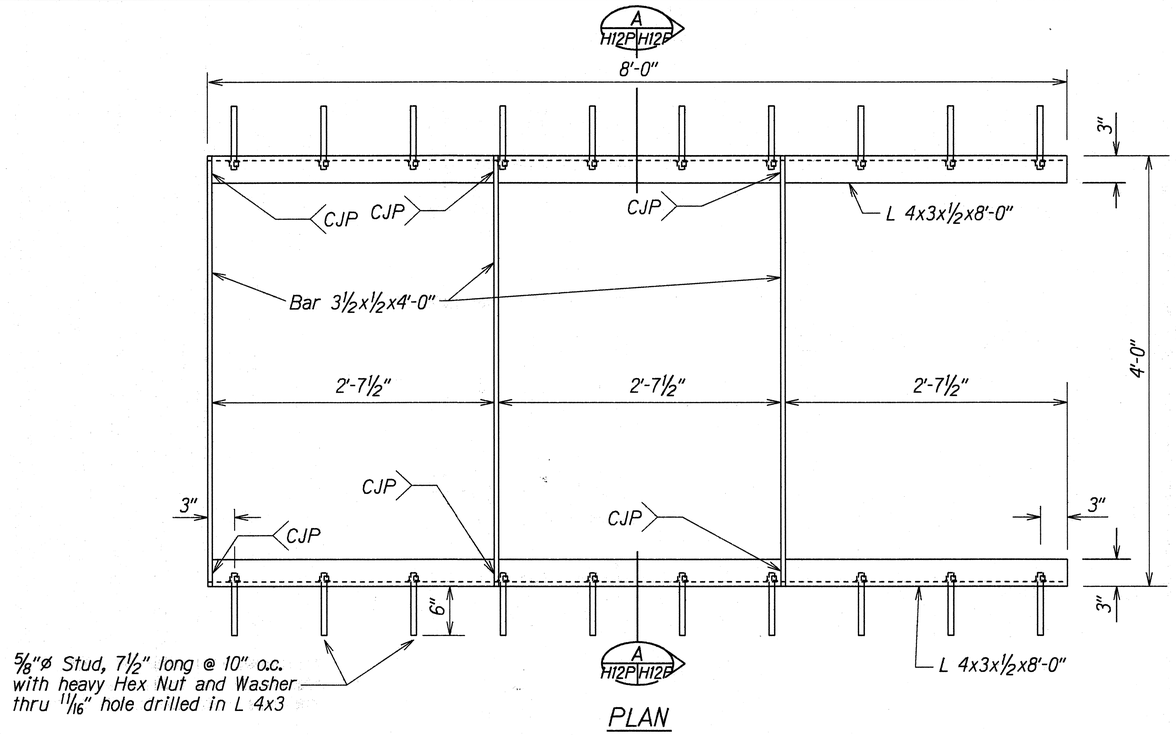

PLAN

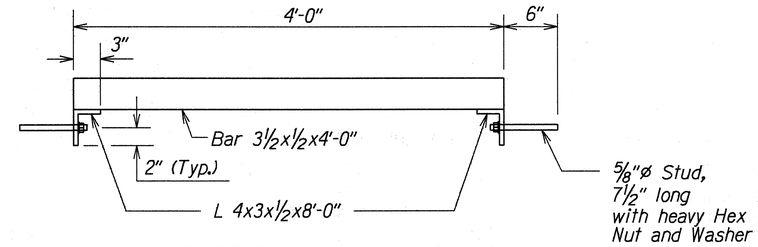

SECTION A H12P H12P

DETAILS OF STEEL FRAME

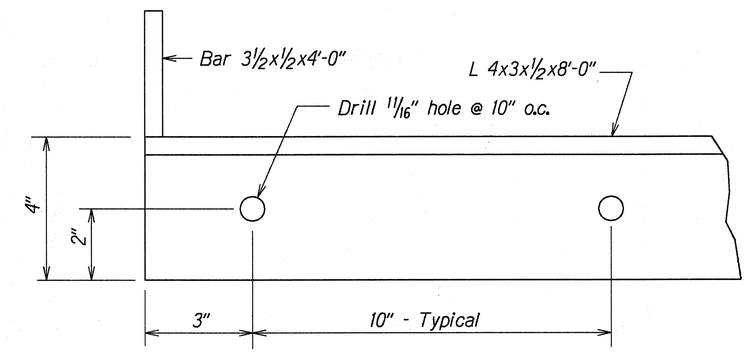

DETAIL OF STUD HOLE
Half Size

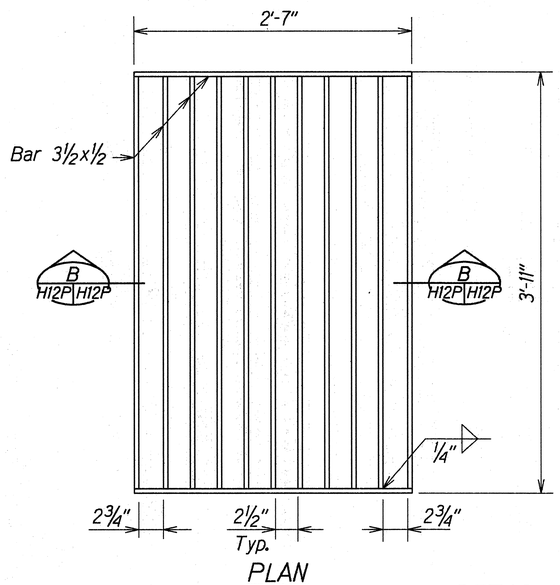

PLAN

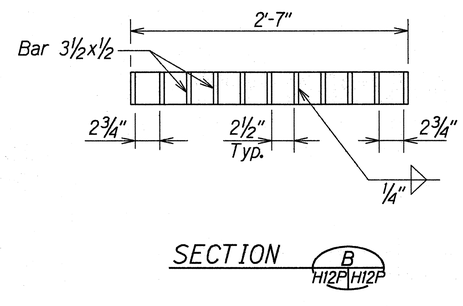

SECTION B H12P H12P

DETAILS OF STEEL GRATES

NOTE

Frames and grates shall be hot dip galvanized after fabrication.

DATE	REVISION
4/15/97	Details added to complete drainage plan.

STATE OF HAWAII
DEPARTMENT OF TRANSPORTATION
HIGHWAYS DIVISION

DRAINAGE DETAILS

KALANIANAOLE HIGHWAY RESURFACING
Kailua Rd. to Hilu St.
Project No. 72A-01-96M

Scale: 1½"=1'-0" Date: Apr. 1997

SHEET No. H12P OF 12 SHEETS

DETAILS OF TYPE A-11 STEEL FRAME AND GRATES

ORIGINAL PLAN
SURVEY PLOTTED BY
DRAWN BY A. Nomura
TRACED BY
DESIGNED BY R. Sakamoto
QUANTITIES BY
CHECKED BY
DATE 4/14/97
NOTE BOOK
dh/ai/kai
ae/nh/ts/jm

C.O. 55S–16