FED. ROAD DIST. NO.	STATE	FED. AID PROJ. NO.	FISCAL YEAR	SHEET NO.	TOTAL SHEETS
HAWAII	HAW.	F-072-1(34)-A	1990	156	186

GENERAL NOTES

1. GENERAL SPECIFICATIONS: HAWAII DEPARTMENT OF TRANSPORTATION, STANDARD SPECIFICATIONS FOR ROAD AND BRIDGE CONSTRUCTION, 1985, TOGETHER WITH SPECIAL PROVISIONS PREPARED FOR THIS CONTRACT.

2. DESIGN SPECIFICATIONS: THE 14TH EDITION OF A.A.S.H.T.O. STANDARD SPECIFICATIONS FOR HIGHWAY BRIDGES.

3. LOADS:
   (A) DEAD LOAD: AN ALLOWANCE OF 18 P.S.F. FOR FUTURE WEARING SURFACE OF ASPHALT CONCRETE HAS BEEN PROVIDED FOR IN THE DESIGN.
   (B) LIVE LOAD: HS20-44 OR INTERSTATE LOADING.

4. MATERIALS:
   (A) CONCRETE FOR DECK SLAB SHALL BE CLASS BD.
   (B) OTHER CONCRETE SHALL BE CLASS A UNLESS OTHERWISE NOTED.
   (C) ALL REINFORCING STEEL SHALL BE A.S.T.M. A615, GRADE 40 UNLESS OTHERWISE NOTED.
   (D) ALL STRUCTURAL STEEL SHALL BE A.S.T.M. A-36 HOT DIP GALVANIZED, UNLESS OTHERWISE NOTED.
   (E) FOR MATERIALS OF PRESTRESSED CONCRETE BEAM, SEE SHEET S-13.

5. DESIGN STRESSES: SHALL FOLLOW A.A.S.H.T.O. STANDARD SPECIFICATIONS FOR HIGHWAY BRIDGES IN ADDITION TO THOSE LISTED BELOW.

CONCRETE	CLASS A	CLASS BD
f'c	3000 P.S.I.	3750 P.S.I.
fc	1200 P.S.I.	1500 P.S.I.
n	9	9

FOR PRESTRESSED CONCRETE BEAMS, SEE SHEET S-13

6. REINFORCEMENT: FOR REINFORCEMENT NOTES, SEE GENERAL NOTES ON STANDARD PLAN NO. B-01.

7. ELASTOMERIC PADS: TO PREVENT DISPLACEMENT, BOTTOM OF BRIDGE BEARING PADS SHALL BE SECURED TO THE CONCRETE SEATS WITH ADHESIVES APPROVED BY THE ENGINEER.

8. CONSTRUCTION METHODS:
   (A) SEE STANDARD SPECIFICATIONS AND SPECIAL PROVISIONS.
   (B) GIRDER CONCRETE SEATS RECEIVING ELASTOMERIC PADS SHALL BE POURED MONOLITHICALLY WITH SUPPORTING STRUCTURE. TOP OF CONCRETE SEATS SHALL BE FINISHED WITH A STEEL TROWEL TO A SMOOTH AND TRUE TO GRADE FINISH WITH A DEVIATION FROM A LEVEL PLANE NOT EXCEEDING 1/16 INCH.
   (C) EXCEPT AS OTHERWISE NOTED, ALL VERTICAL DIMENSIONS ARE MEASURED PLUMB.
   (D) THE CONTRACTOR SHALL VERIFY THE LOCATIONS OF ALL EXISTING ABUTMENTS, PIERS, UTILITIES AND APPURTENANCES PRIOR TO THE COMMENCEMENT OF WORK. SHOULD THESE FIELD VERIFICATIONS OF DIMENSIONS INDICATE 6" OR MORE DIFFERENT FROM THAT SHOWN ON THE PLANS, THE CONTRACTOR SHALL NOTIFY THE ENGINEER TO DETERMINE WHETHER A REDESIGN IS REQUIRED.
   (E) ALL CUT-OFF REINFORCEMENT IN EXISTING STRUCTURES SHALL BE BURNED TO 3/8" DEEP INTO EXISTING CONCRETE AND PATCHED WITH EPOXY GROUT.
   (F) THE EXACT LOCATIONS OF THE EXISTING SEWER SIPHON CONCRETE JACKET AND 24" WATER MAIN CONCRETE JACKET SHALL BE DETERMINED BY PROBING AND EXPOSING THE TOP OF CONCRETE JACKETS PRIOR TO AUGERING HOLES. THE METHOD OF PROBING SHALL BE APPROVED BY THE OWNERS OF THE UTILITIES.
   (G) THE PILES WHICH STRADDLE THE SEWER SIPHON CONCRETE JACKET OR 24" WATER MAIN CONCRETE JACKET SHALL BE DRIVEN THROUGH PRE-AUGERED HOLES WITH SLEEVES. THE TIP ELEVATION OF SLEEVED HOLES IS (-)11.0. THE CONTRACTOR HAS THE OPTION OF EITHER PULLING OUT THE SLEEVE OR LEAVING IT IN PLACE. IF THE SLEEVE IS LEFT IN PLACE, THE CONTRACTOR SHALL CUT-OFF THE SLEEVE 1'-0" BELOW THE BOTTOM OF THE FOOTING OR CURTAIN WALL. THE ANNULAR SPACE AROUND THE PILE SHALL BE FILLED WITH FINE AGGREGATE. THE COST OF FURNISHING AND INSTALLING FINE AGGREGATE SHALL BE INCIDENTAL TO PRE-AUGERED SLEEVED HOLE.
   (H) THE CONTRACTOR SHALL DRIVE PILES ON BOTH SIDES OF THE SIPHON CONCRETE JACKET OR 24" WATER MAIN CONCRETE JACKET ALTERNATELY SO AS TO BALANCE ANY POSSIBLE PIPE DISPLACEMENT.
   (I) THE EXISTING PIPES TO REMAIN ON EXISTING STRUCTURES SHALL BE PROTECTED BY THE CONTRACTOR DURING CONSTRUCTION OF THIS PROJECT. ANY DAMAGES TO THESE PIPES DURING CONSTRUCTION SHALL BE REPAIRED AND RE-INSTALLED TO THE ORIGINAL CONDITION BY THE CONTRACTOR AT HIS OWN EXPENSE.
   (J) APPLY BITUMINUOUS TACK COAT TO BRIDGE DECK PRIOR TO INSTALLATION OF AC OVERLAY. AC OVERLAY SHALL CONSIST OF AC PAVEMENT MIX NO. V.
   (K) CONTRACTOR MAY DRIVE PILES FROM EXISTING BRIDGES, SUBJECT TO THE FOLLOWING CONDITIONS:
      - o A WORKING PLATFORM SPANNING FROM ABUTMENT TO CENTER PIER SHALL BE INSTALLED SUCH THAT NO LOAD FROM THE PILE DRIVER WILL BE TRANSFERRED ONTO THE BRIDGE SPAN.
      - o CONTRACTOR SHALL SUBMIT WORKING DRAWINGS AND DESIGN CALCULATIONS FOR THE WORKING PLATFORM TO THE ENGINEER FOR APPROVAL. DRAWINGS AND CALCULATIONS SHALL BE STAMPED BY A STRUCTURAL ENGINEER REGISTERED IN THE STATE OF HAWAII.

9. GENERAL:
   (A) ALL ITEMS NOTED INCIDENTAL WILL NOT BE PAID FOR SEPARATELY.
   (B) THE CONTRACTOR SHALL VERIFY THE LOCATION OF ALL UTILITY LINES AND NOTIFY THE RESPECTIVE OWNERS BEFORE COMMENCING THE WORK OF EXCAVATION OR THE DRIVING OF PILES, INCLUDING ANY TEMPORARY PILING OR SHEETING.
   (C) HECO WILL DEENERGIZE AERIAL ELECTRIC LINES IN CLOSE PROXIMITY OF THE PILE DRIVING RIG DURING PILE DRIVING OPERATIONS. DURING NON-WORKING HOURS AND WHEN PILE DRIVING CEASES FOR MORE THAN 1 HOUR, THE CONTRACTOR SHALL MOVE ALL EQUIPMENT SUCH THAT A MINIMUM CLEARANCE OF 10' FROM THE AERIAL LINES IS MAINTAINED. CONTRACTOR SHALL PROVIDE PILE DRIVING SCHEDULE TO HAWAIIAN ELECTRIC COMPANY, HAWAIIAN TELEPHONE COMPANY AND OCEANIC CABLEVISION NOT LESS THAN 60 DAYS PRIOR TO BEGIN OF PILE DRIVING OPERATIONS.
   (D) CONSTRUCTION JOINTS MAY BE RELOCATED OR ADDED SUBJECT TO THE APPROVAL OF THE ENGINEER.
   (E) UNLESS OTHERWISE NOTED, ALL EXPOSED CONCRETE EDGES SHALL BE CHAMFERED 3/4" X 3/4".

10. FOUNDATION NOTES:
   (A) DESIGN LOAD FOR ALL PILES = 75 TONS (AASHTO GROUP I).
   (B) TEST PILES INDICATED IN FOUNDATION PLAN SHALL BE FURNISHED 15' LONGER THAN REGULAR PILES.
   (C) IN DRIVING EACH GROUP OF PILES, THE CONTRACTOR SHALL START FROM THE CENTER OF THE GROUP AND PROCEED OUTWARD.
   (D) THE PILE TIP ELEVATIONS SHOWN ON PLANS ARE BASED ON BORING DATA.
   (E) FOR 16 1/2" OCTAGONAL PILE DETAILS, SEE SHEET NOS. S-18A AND S-18B.

11. SYMBOLS AND ABBREVIATIONS:

E OR EXP.	- EXPANSION	JT.	- JOINT
H	- HINGE	N.T.S.	- NOT TO SCALE
ALT.	- ALTERNATE	O.C.	- ON CENTER
AZ.	- AZIMUTH	O/S	- OFF SET
℄	- CENTERLINE	APPROX.	- APPROXIMATE
℞	- BASELINE	STIRR.	- STIRRUP
E.F.	- EACH FACE	TYP.	- TYPICAL
B.F.	- BOTH FACES	T.	- TOP
F.F.	- FRONT FACE	B. OR BOT.	- BOTTOM
R.F.	- REAR FACE	BRG.	- BEARING
C.J.	- CONSTRUCTION JOINT	A.C.	- ASPHALT CONCRETE
CL.	- CLEAR	STL.	- STEEL
EL., ELEV.	- ELEVATION	W.P.	- WORKING POINT
E.P.	- EDGE OF PAVEMENT	@	- AT
I.B.	- INBOUND	Ø OR DIA.	- DIAMETER
FIN. GR.	- FINISH GRADE	ℙ	- PROPERTY LINE OR PLATE
O.B.	- OUT BOUND	G.R.P.	- GROUTED RUBBLE PAVING
C.R.M.	- CEMENT RUBBLE MASONRY	P.C.C.	- PORTLAND CEMENT CONCRETE
		R/W	- RIGHT OF WAY

12. REFERENCE:
THE PLANS OF THE EXISTING BRIDGES (F.A.P. NO. 6B AND PROJECT NO. F6(18)) ARE AVAILABLE FOR PERUSAL AT THE DEPARTMENT OF TRANSPORTATION, TECHNICAL DESIGN SERVICES OFFICE, 869 PUNCHBOWL STREET, HONOLULU (MR. FRED ABESHIMA, 548-4042).

INDEX TO BRIDGE DRAWINGS

SHEET NO.	DESCRIPTION
S-1	GENERAL NOTES
S-2	GENERAL PLAN INBOUND BRIDGE
S-3	GENERAL PLAN OUTBOUND BRIDGE
S-4	LONGITUDINAL SECTIONS
S-5	FOUNDATION PLAN
S-6	PIER #1 DETAILS
S-7	PIER #2 DETAILS
S-8	ABUTMENTS #1 AND #2 DETAILS
S-9	ABUTMENTS #3 AND #4 DETAILS
S-10	ABUTMENT SECTIONS SHEET 1 OF 2
S-11	ABUTMENT SECTIONS SHEET 2 OF 2
S-12	FRAMING PLAN
S-13	PRESTRESS BEAM DETAILS
S-14	DECK REINFORCING PLANS AND SECTIONS
S-15	MISCELLANEOUS DETAILS SHEET 1 OF 3
S-16	MISCELLANEOUS DETAILS SHEET 2 OF 3
S-17	MISCELLANEOUS DETAILS SHEET 3 OF 3
S-18	METAL RAILING DETAILS
S-18A	PRESTRESSED CONCRETE PILES SHEET 1 OF 2
S-18B	PRESTRESSED CONCRETE PILES SHEET 2 OF 2
S-19	BORING LOGS

HU PANG CHEN
REGISTERED PROFESSIONAL ENGINEER
No. 3865-S
HAWAII, U.S.A.

THIS WORK WAS PREPARED BY ME OR UNDER MY SUPERVISION.
Hupang Chen

STATE OF HAWAII
DEPARTMENT OF TRANSPORTATION
HIGHWAYS DIVISION

WAILUPE STREAM BRIDGE WIDENING

GENERAL NOTES

KALANIANAOLE HIGHWAY
Wailupe Circle to East Hind Drive
F.A. PROJECT NO. F-072-1(34)-A

SCALE: DATE: June 30, 1990

SHEET No. S-1 OF 19 SHEETS

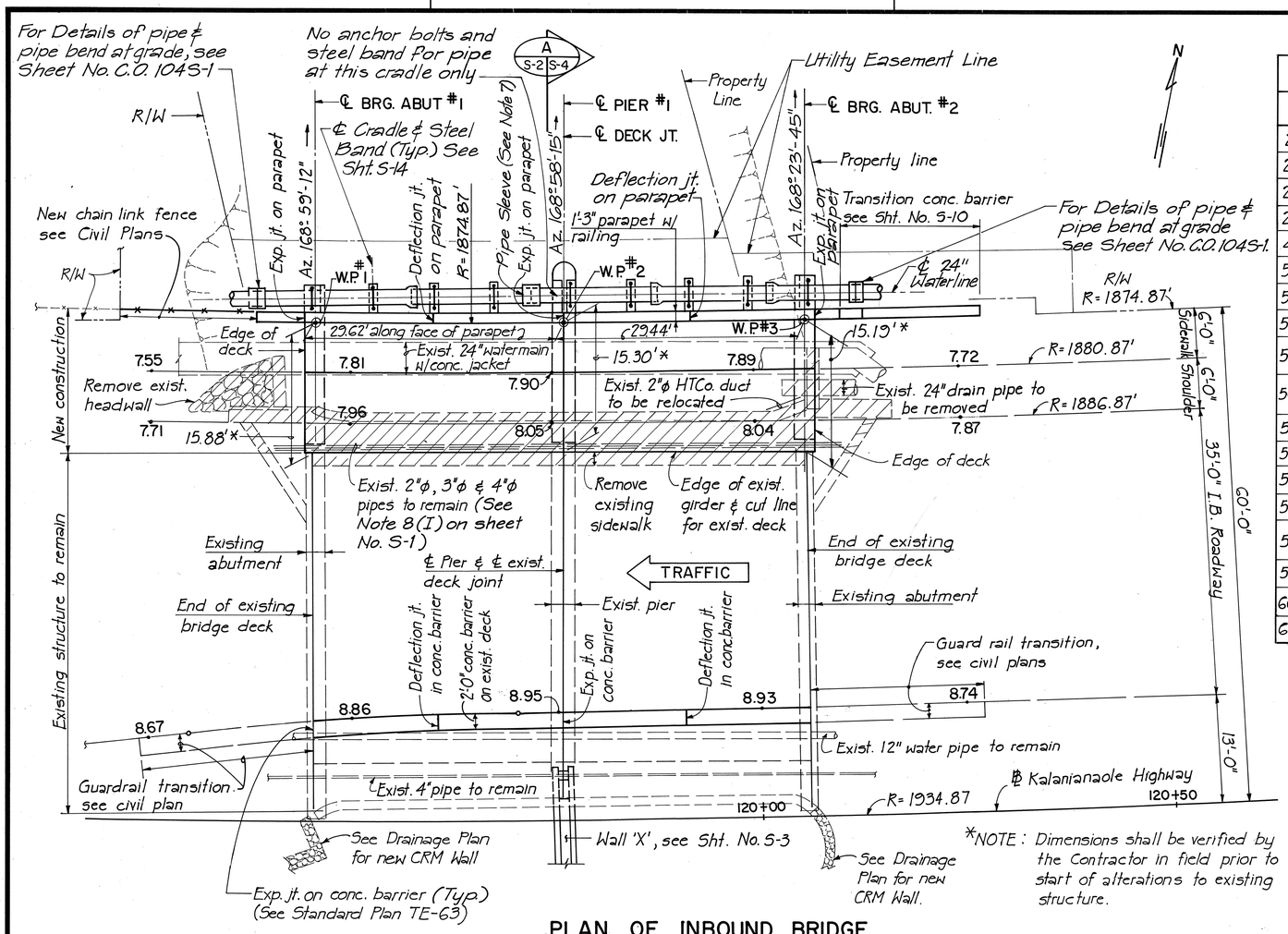

PLAN OF INBOUND BRIDGE

Scale: 1/8" = 1'-0"

*NOTE: Dimensions shall be verified by the Contractor in field prior to start of alterations to existing structure.

FED. ROAD DIST. NO.	STATE	FED. AID PROJ. NO.	FISCAL YEAR	SHEET NO.	TOTAL SHEETS
HAWAII	HAW.	F-072-1(34)-A	1990	157	186

ESTIMATED QUANTITIES

ITEM NO.	ITEM	UNIT	QUANTITIES
206.6000	Structure Excavation for Bridge	C.Y.	236
206.7000	Structure Backfill for Bridge	C.Y.	257
206.8000	Filter Material	C.Y.	19
207.0100	Ditch and Channel Excavation	C.Y.	360
401.0500	Asphalt Concrete Pavement, Mix No. V	Ton	90
503.1092	Concrete in Bridge (Except Footing)	L.S.	(205 C.Y.)
503.1093	Concrete in Bridge Footings	L.S.	(67 C.Y.)
504.6300	Rectangular Prestressed Conc. Girders	L.S.	(505 LF)
505.0430	Precast, Prestressed Concrete Piles, 16 1/2" octagonal, furnished	L.F.	1,096
505.4300	Precast, Prestressed Concrete Piles, 16 1/2" octagonal, driven	L.F.	725
505.6100	Preaugered Hole with Sleeve, 24-Inch Dia.	Each	20
505.9000	Extensions or 'Build-ups' of Piles	F.A.	—
507.1000	Metal Bridge Railing - One Rail on Parapet	L.F.	129
507.7000	Concrete Bridge Parapet (Incl. End Post)	L.F.	166
507.7100	Concrete Barrier on Bridge	L.F.	128
508.0100	Cement Rubble Masonry	C.Y.	166
602.0091	Reinforcing Steel in Bridge	L.S.	(49,000 LBS)
605.1000	Filter Fabric Underdrain	L.F.	38

ADDITIONAL REQUIREMENTS FOR PILE DRIVING ADJACENT TO 24" WATER LINE

A. All piles adjacent to exist. 24-inch water line shall be driven through preaugered holes with sleeves. Sleeve tip elevation shall be (-) 20 feet or lower.

B. The top of the water main jacket at the stream banks, including pipe joints at end of the jacket shall be exposed and surveyed daily during pile driving operations to allow monitoring of any pipe movements and observation of any leakage. Elevation of the water main concrete jacket shall be taken at the start and end of each day during pile driving.

C. When driving any pile within three feet of the water main concrete jacket, elevations of the jacket shall also be taken prior to commencing, midpoint of the driving length and after the completion of driving those piles.

NOTES:

1. See civil plans for alignment of baseline, curbs and concrete barriers.
2. Demolition of existing superstructure concrete & removal of AC overlays shall be incidental to "Concrete in Bridge" and will not be paid for separately.
3. Demolition of existing substructure concrete walls & piles shall be incidental to "Structure Excavation For Bridge" and will not be paid for separately.
4. The deflection joints on parapets and concrete barriers shown on plan shall be located at midpoint of each span.
5. Streambed shall be excavated to finish grade indicated on Sht. S-5. Payment will be made under "Ditch and Channel Excavation".
6. Vehicular and pedestrian traffic must be maintained in accordance with Subsection 107.13 of Special Provisions. Contractor shall submit construction phasing plan for approval by the Engineer.
7. Provide 1" gap between pipe ends at the sleeve.
8. For pipe cradle and steel band details, See Sheet No. S-14.
9. Paint exposed pipe, steel band and pipe anchor per BWS standard.

HYDRAULIC DATA

	MEAN SEA LEVEL	Q_{50} FLOW (CFS)	Q_{50} WATER LEVEL EL.	Q_{100} FLOW (CFS)	Q_{100} WATER LEVEL EL.
10ft. up stream of mauka bridge	0.8	4,950	3.0	5,870	3.1
10 ft. down stream of makai bridge	0.8	4,950	5.4	5,870	6.7

WORK POINT	℄ STATION	OFFSET
W.P. #1	119+45.47	60' Lt.
W.P. #2	119+76.04	60' Lt.
W.P. #3	120+06.43	60' Lt.

LEGEND

- Existing Structure to be removed
- Existing Structure to remain
- New Construction
- 9.47 Finish Deck Spot Elevation (located at Stations +00, +25, +50, +75; unless otherwise shown)

DATE	REVISIONS
9/10/91	Revised Quantity Table. Added Notes 7 & 9. Added Additional Requirements For Pile Driving Adjacent to 24-inch Water Line. Revised plan of I.B. Bridge to add 24" Water Line.
9/10/91	Revised plan of I.B. Bridge.

STATE OF HAWAII
DEPARTMENT OF TRANSPORTATION
HIGHWAYS DIVISION
WAILUPE STREAM BRIDGE WIDENING

GENERAL PLAN
INBOUND BRIDGE

KALANIANAOLE HIGHWAY
Wailupe Circle to East Hind Drive
F.A. Project No. F-072-1(34)-A

SCALE: As shown DATE: JUNE 30, 1990

HUI PANG CHEN
REGISTERED PROFESSIONAL ENGINEER
No. 3863-S
HAWAII, U.S.A.

THIS WORK WAS PREPARED BY ME OR UNDER MY SUPERVISION

Hui-pang Chen

for Chief, Plng. & Engr., B.W.S. 10/24/91 Date

ORIGINAL PLAN | SURVEY PLOTTED BY | DRAWN BY | TRACED BY | DESIGNED BY | QUANTITIES BY | CHECKED BY | DATE | NOTE BOOK | No.

SHEET No. S-2 OF 19 SHEETS

C.O. 157

FED. ROAD DIST. NO.	STATE	FED. AID PROJ. NO.	FISCAL YEAR	SHEET NO.	TOTAL SHEETS
HAWAII	HAW.	F-072-1(34)-A	1990	158	186

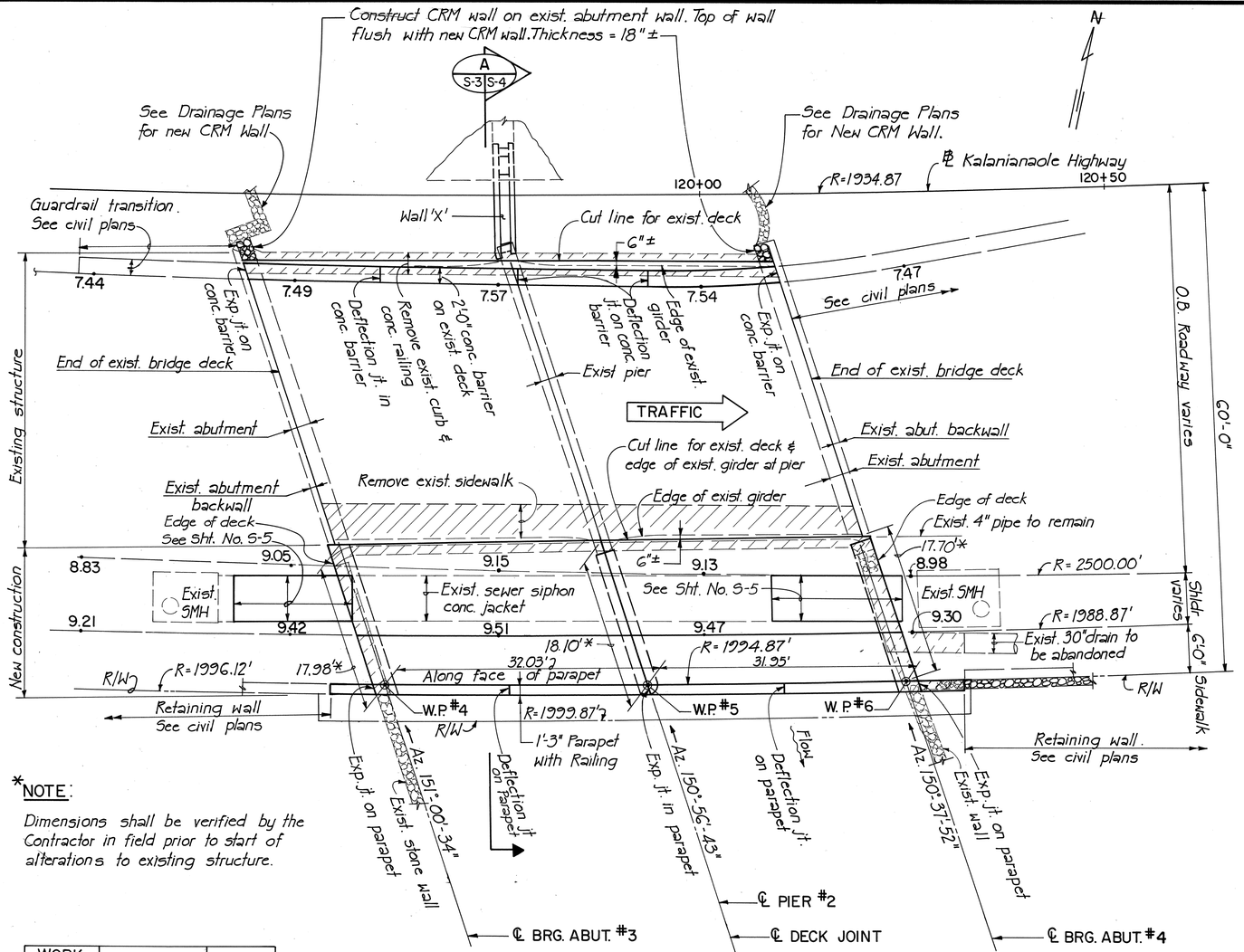

PLAN OF OUTBOUND BRIDGE

Scale: 1/8" = 1'-0"

*NOTE:

Dimensions shall be verified by the Contractor in field prior to start of alterations to existing structure.

WORK POINT	℄ STATION	OFFSET
W.P.#4	119+61.57	60' Lt.
W.P.#5	119+92.64	60' Lt.
W.P.#6	120+23.63	60' Lt.

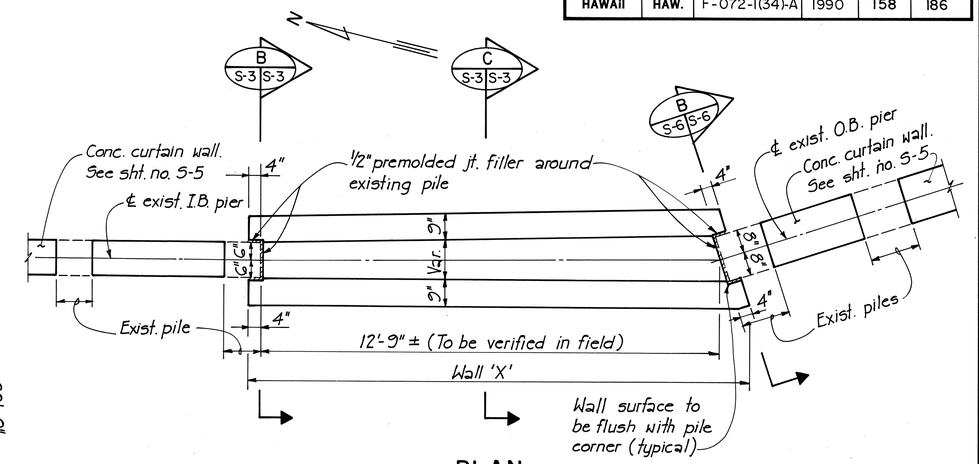

PLAN

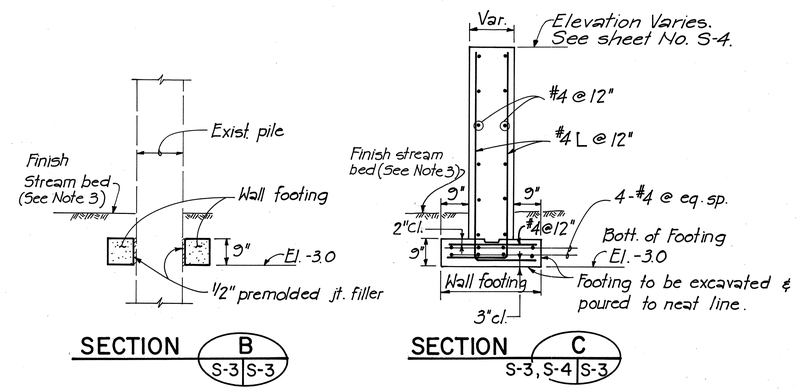

WALL 'X' DETAILS

Scale: 1/2" = 1'-0"

NOTES:

1. See notes on sheet no. S-2.
2. For legend see sheet no. S-2
3. The Wall 'X' footing shall backfilled with coarse aggregate (AASHTO M43, size No. 67). The coarse aggregate shall be incidental to structural backfill & will not be paid for separately.

HUI PANG CHEN REGISTERED PROFESSIONAL ENGINEER No. 3865-S HAWAII, U.S.A.

THIS WORK WAS PREPARED BY ME OR UNDER MY SUPERVISION.

Huipang Chen

STATE OF HAWAII
DEPARTMENT OF TRANSPORTATION
HIGHWAYS DIVISION
WAILUPE STREAM BRIDGE WIDENING
GENERAL PLAN
OUTBOUND BRIDGE
KALANIANAOLE HIGHWAY
Wailupe Circle to East Hind Drive
F.A. Project No. F-072-1(34)-A

SCALE: As shown DATE: JUNE 30, 1990

SHEET No. S-3 OF 19 SHEETS

ORIGINAL PLAN | SURVEY PLOTTED BY | DRAWN BY | TRACED BY | DESIGNED BY | QUANTITIES BY | CHECKED BY | DATE | NOTE BOOK | No.

FED. ROAD DIST. NO.	STATE	FED. AID PROJ. NO.	FISCAL YEAR	SHEET NO.	TOTAL SHEETS
HAWAII	HAW.	F-072-1(34)-A	1990	159	186

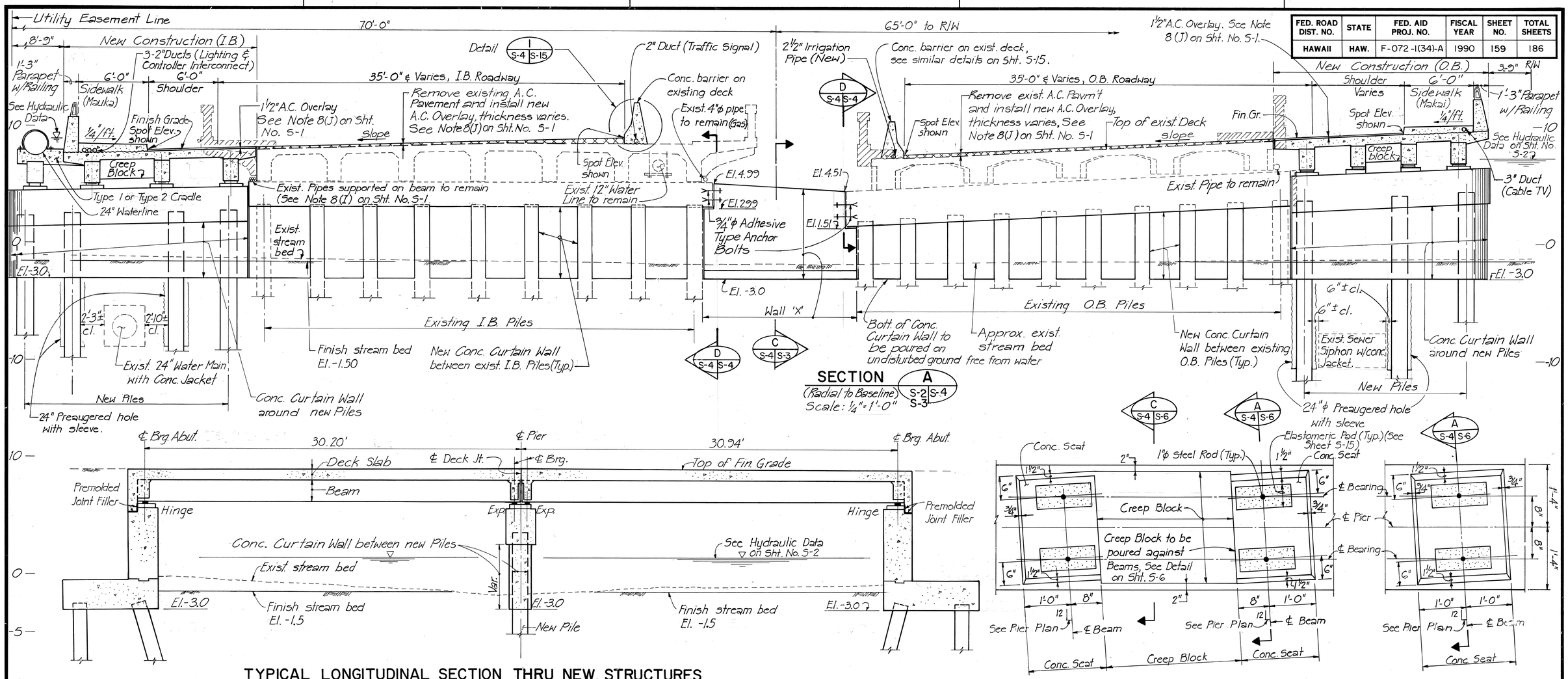

SECTION A (Radial to Baseline) S-2 S-4 S-3
Scale: ¼" = 1'-0"

TYPICAL LONGITUDINAL SECTION THRU NEW STRUCTURES
Scale: ¼" = 1'-0"

PLAN - CONCRETE SEAT & CREEP BLOCK AT PIER #1
SCALE: 1" = 1'-0"

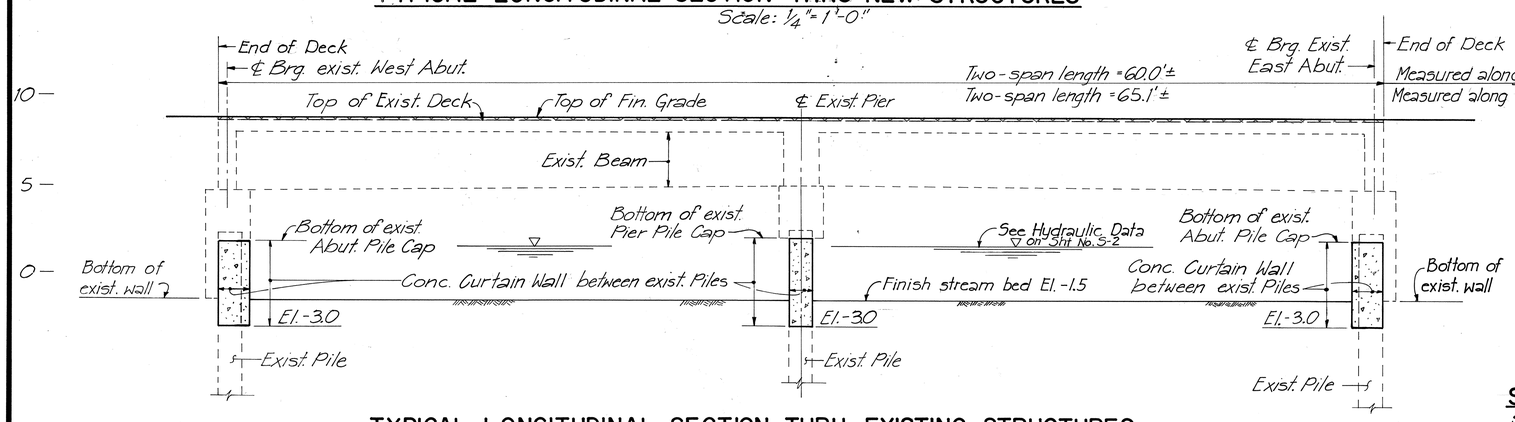

TYPICAL LONGITUDINAL SECTION THRU EXISTING STRUCTURES
Scale: ¼" = 1'-0"

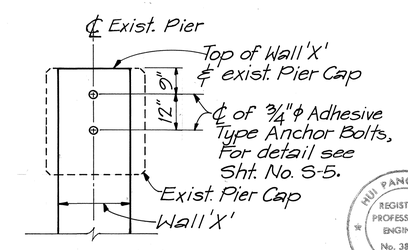

SECTION D S-4 S-4
Scale: ½" = 1'-0"

DATE	REVISIONS
9/10/91	Revised Section A S-2, S-3 S-4 to add 24" Water Line

STATE OF HAWAII
DEPARTMENT OF TRANSPORTATION
HIGHWAYS DIVISION

WAILUPE STREAM BRIDGE WIDENING

LONGITUDINAL SECTIONS

KALANIANAOLE HIGHWAY
Wailupe Circle to East Hind Drive
F.A. Project No. F-072-1(34)-A

SCALE: As shown DATE: JUNE 30, 1990

HUI PANG CHEN REGISTERED PROFESSIONAL ENGINEER No. 3863-S HAWAII, U.S.A.

THIS WORK WAS PREPARED BY ME OR UNDER MY SUPERVISION.
Hupang Chen

SHEET No. S-4 OF 19 SHEETS

C.O. 159

ORIGINAL PLAN	SURVEY PLOTTED BY	DATE
	DRAWN BY	
	TRACED BY	
NOTE BOOK	DESIGNED BY	
No.	QUANTITIES BY	
	CHECKED BY	

FED. ROAD DIST. NO.	STATE	FED. AID PROJ. NO.	FISCAL YEAR	SHEET NO.	TOTAL SHEETS
HAWAII	HAW.	F-072-1(34)-A	1990	160	186

NOTE 'A': Construct new Conc. Curtain Walls between existing piles of the existing bridges.

NOTE 'B': For spacings of piles, see individual pier & abutment details on Sht. Nos. S-6, to S-9.

NOTE 'C': The interface between existing pile & curtain wall shall be cleaned by sandblasting (free of dirt, oil & laitance). Epoxy Bonding Material shall be coated on the surface of exist. pile immediately prior to pouring curtain wall concrete.

NOTE 'D': The temporary sheeting shown is incomplete. Provide temporary sheeting as required during construction of footings & walls.

NOTE 'E': If an existing rebar is encountered during drilling of an adhesive type anchor bolt hole, the hole shall be abandoned and filled with epoxy grout. A replacement hole shall be drilled so that the spacing of bolts is maintained.

NOTE 'F': For additional requirements for pile driving adjacent to 24" Water Line, See Sht. No. S-2.

PILE ELEVATIONS

	Abut. #1		Pier #1		Abut. #2		Abut. #3		Pier #2		Abut. #4		Remarks
	Pile Cut-off Elev.	Pile Tip Elev.	Pile Cut-off Elev.	Pile Tip Elev.	Pile Cut-off Elev.	Pile Tip Elev.	Pile Cut-off Elev.	Pile Tip Elev.	Pile Cut-off Elev.	Pile Tip Elev.	Pile Cut-off Elev.	Pile Tip Elev.	
Upstream Piles	-2.00	-30.00	2.56	-30.00	-2.00	-30.00	-2.00	-30.00	3.62	-30.00	-2.00	-30.00	
Middle Piles	↕	↕	2.80		↕	↕	↕	↕	4.19		↕	↕	
DN Stream Piles	-2.00	-30.00	2.91	-30.00	-2.00	-30.00	-2.00	-30.00	4.45	-30.00	-2.00	-30.00	
Added Pile	—	—	2.46	-30.00	—	—	—	—	—	—	—	—	

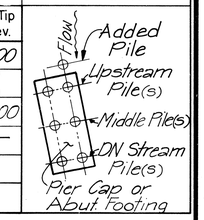

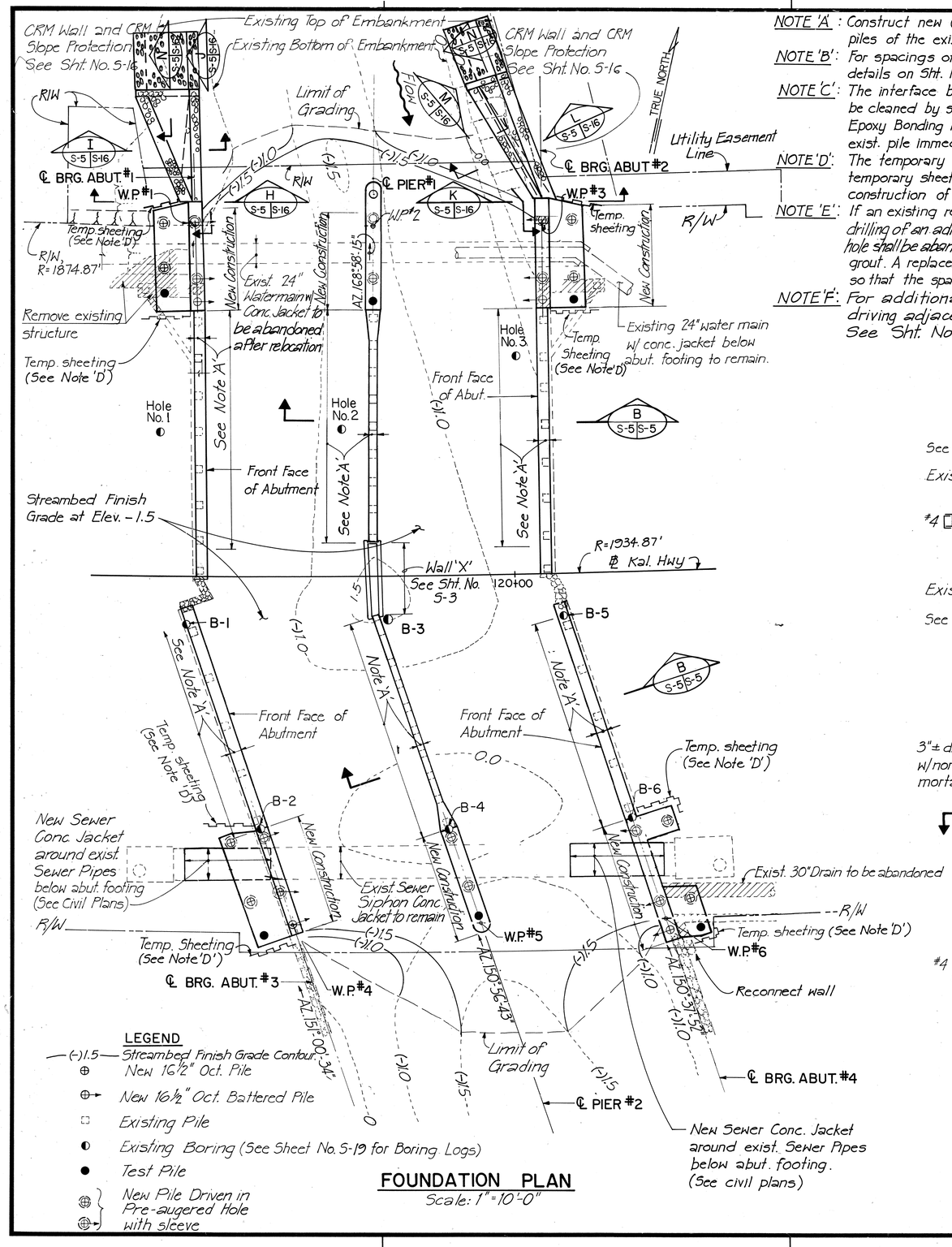

LEGEND

- (-)1.5 Streambed Finish Grade Contour
- New 16½" Oct. Pile
- New 16½" Oct. Battered Pile
- Existing Pile
- Existing Boring (See Sheet No. S-19 for Boring Logs)
- Test Pile
- New Pile Driven in Pre-augered Hole with sleeve

FOUNDATION PLAN

Scale: 1"=10'-0"

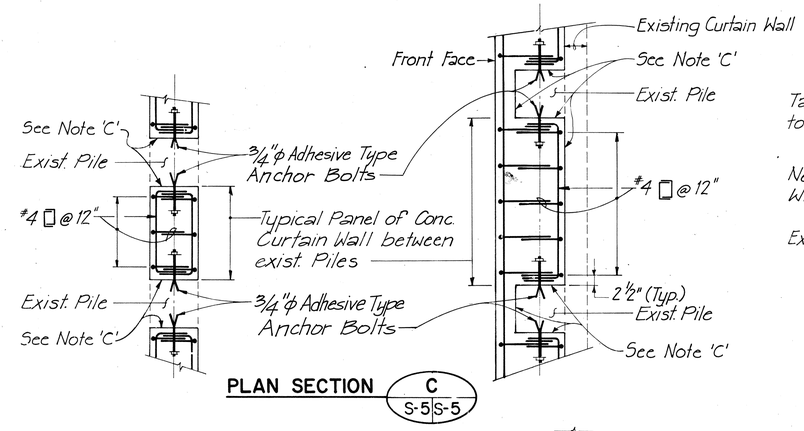

PLAN SECTION C (S-5 | S-5)

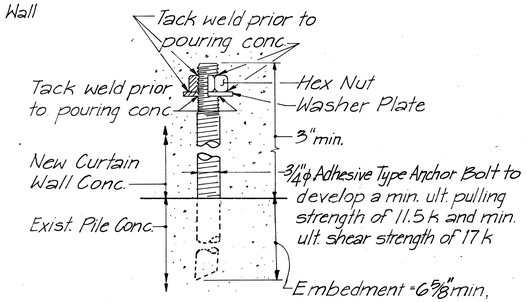

ADHESIVE TYPE ANCHOR BOLT DETAIL

N.T.S.

(NOTE: All Adhesive Type Anchor Bolts, Nuts & Washers shall be stainless steel. See Note 'E').

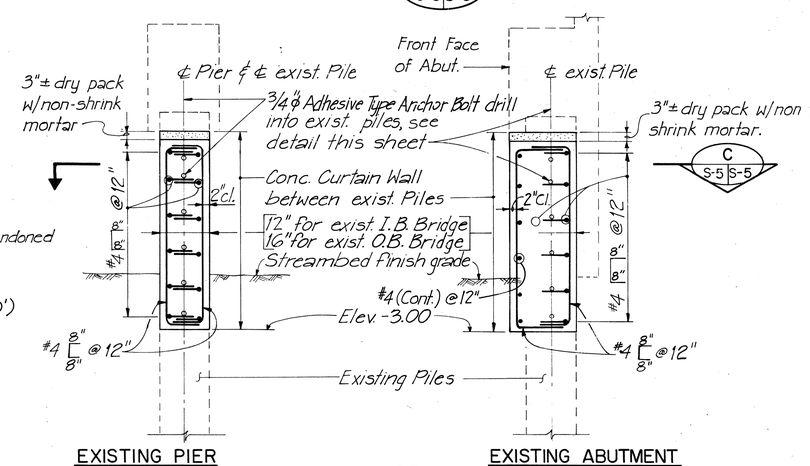

EXISTING PIER — EXISTING ABUTMENT

SECTION B (S-5 | S-5)

TYPICAL CONCRETE CURTAIN WALL BETWEEN EXIST. PILES

Scale: ½"=1'-0"

NOTE: For details of transition panel between exist. piles & new curtain wall, see Sht. Nos. S-6 & S-7.

DATE	REVISIONS
9/10/91	Revised Foundation Plan to add 24" Water Line. Added pile data to pile schedule. Added Note 'F'.

STATE OF HAWAII
DEPARTMENT OF TRANSPORTATION
HIGHWAYS DIVISION

WAILUPE STREAM BRIDGE WIDENING

FOUNDATION PLAN

KALANIANAOLE HIGHWAY
Wailupe Circle to East Hind Drive
FA. Project No. F-072-1(34)-A

SCALE: As shown — DATE: JUNE 30, 1990

SHEET No. S-5 OF 19 SHEETS

HO PING CHEN REGISTERED PROFESSIONAL ENGINEER No. 3848-S HAWAII, U.S.A.

THIS WORK WAS PREPARED BY ME OR UNDER MY SUPERVISION.

Chief, Plng. & Engr., B.W.S. — Date 10/24/91

SURVEY PLOTTED BY / DRAWN BY / TRACED BY / DESIGNED BY / QUANTITIES BY / CHECKED BY / DATE

ORIGINAL PLAN / NOTE BOOK / No.

C.0.160

FED. ROAD DIST. NO.	STATE	FED. AID PROJ. NO.	FISCAL YEAR	SHEET NO.	TOTAL SHEETS
HAWAII	HAW.	F-072-1(34)-A	1990	161	186

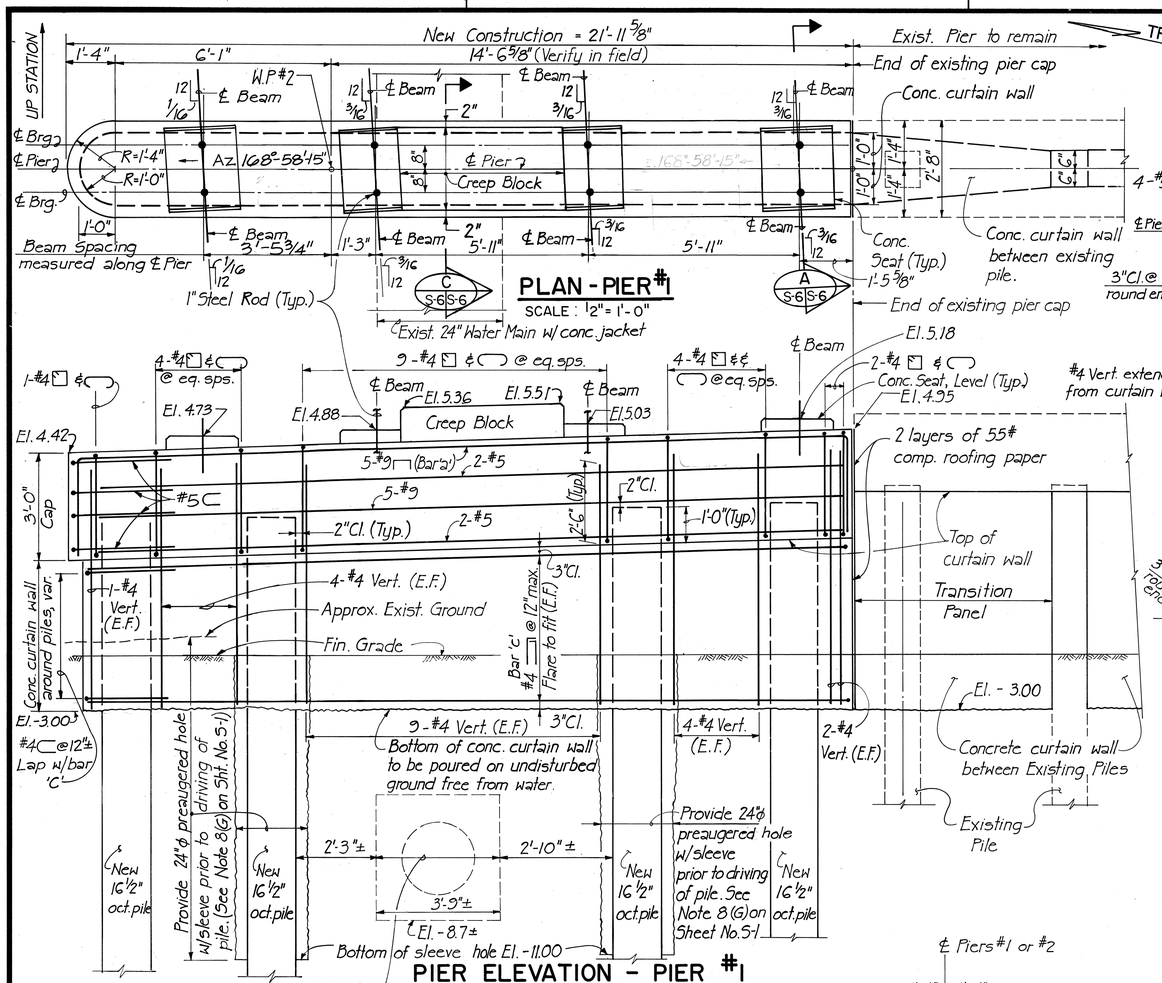

PLAN - PIER #1

SCALE : 1/2" = 1'-0"

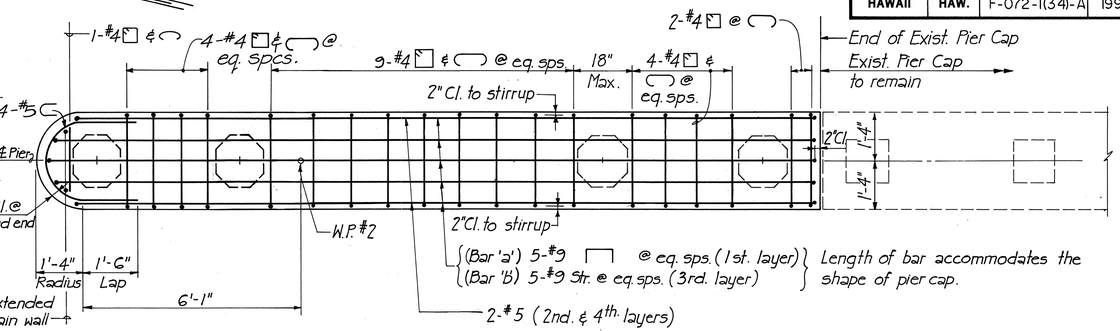

CAP REINFORCING PLAN - PIER #1

SCALE : 1/2" = 1'-0"

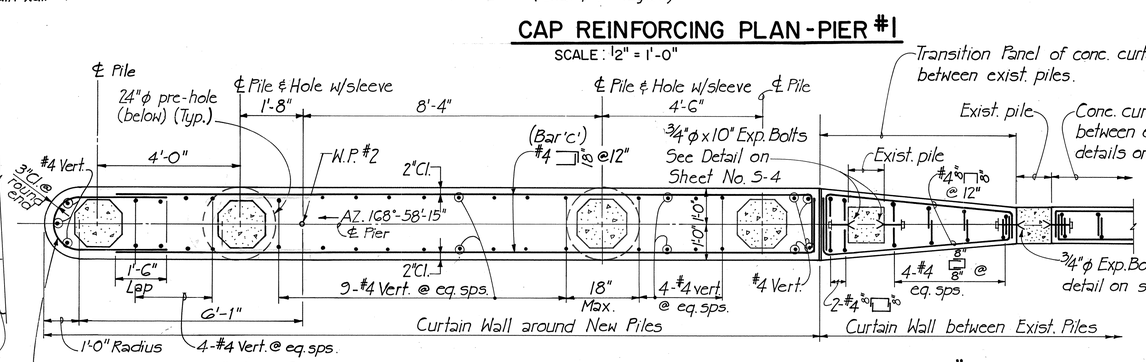

PILE & CONCRETE CURTAIN WALL REINFORCING PLAN - PIER #1

SCALE : 1/2" = 1'-0"

NOTE X:
Strands or re-bars in pile shall be extended 4'-0" min. into pile cap.

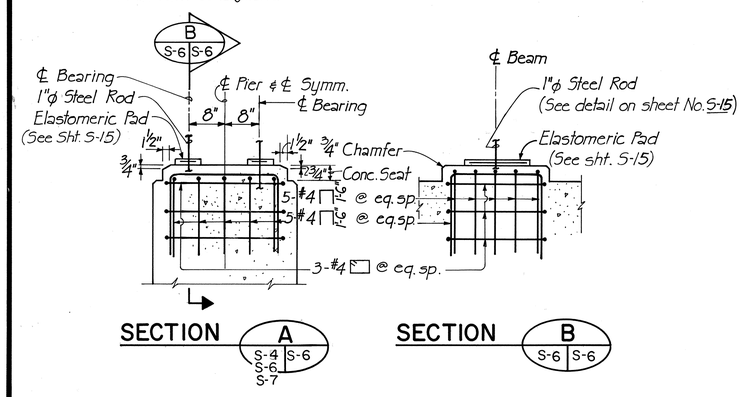

TYPICAL CONCRETE SEAT DETAIL

SCALE : 3/4" = 1'-0"

NOTE: For plan dimensions of Concrete Seat, see Sheet Nos. S-4 & S-7 & S-11. For construction of Concrete Seats see Note 8(B) on sheet No. S-1.

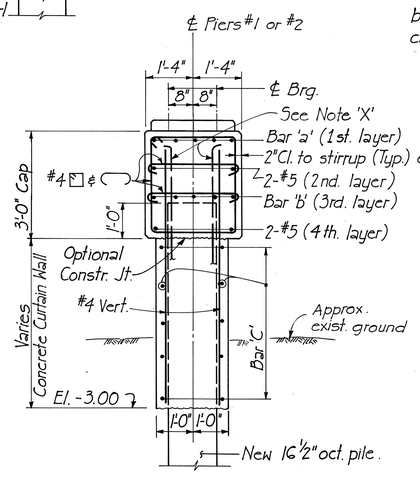

TYPICAL PIER SECTION

SCALE : 1/2" = 1'-0"

NOTE: For shapes & sizes of Bar 'a', Bar 'b' & Bar 'c', see individual pier details.

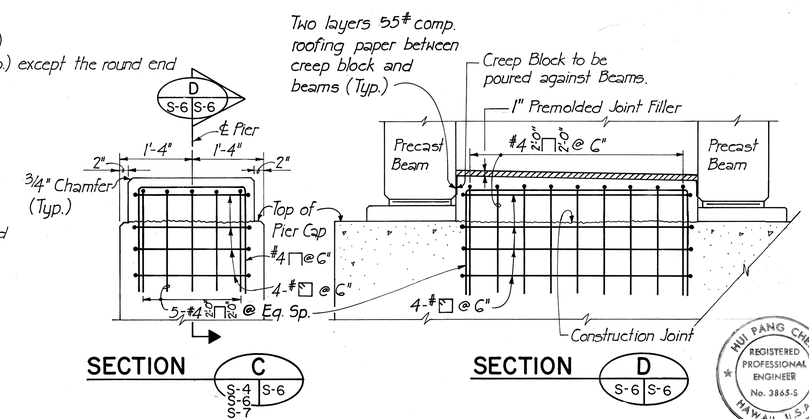

TYPICAL CREEP BLOCK DETAIL

SCALE : 3/4" = 1'-0"

NOTE: For plan dimensions of Creep Block see Sheet Nos. S-6, S-7 & S-11.

DATE	REVISIONS
9/10/91	Revised Pier Plan, Pier Elevation, Cap Reinforcing Plan, Pile & Concrete Curtain Wall Reinforcing Plan.

STATE OF HAWAII
DEPARTMENT OF TRANSPORTATION
HIGHWAYS DIVISION

WAILUPE STREAM BRIDGE WIDENING

PIER #1 DETAILS

KALANIANAOLE HIGHWAY
Wailupe Circle to East Hind Drive
F.A. Project No. F-072-1(34)-A

SCALE : As shown DATE : JUNE 30, 1990

HUI PANG CHEN
REGISTERED PROFESSIONAL ENGINEER
No. 3865-S
HAWAII, U.S.A.

THIS WORK WAS PREPARED BY ME OR UNDER MY SUPERVISION.
Hui Pang Chen

SURVEY PLOTTED BY
DRAWN BY
TRACED BY
DESIGNED BY
QUANTITIES BY
CHECKED BY
DATE
ORIGINAL PLAN
REVISED PLAN
NOTE BOOK
No.

FED. ROAD DIST. NO.	STATE	FED. AID PROJ. NO.	FISCAL YEAR	SHEET NO.	TOTAL SHEETS
HAWAII	HAW.	F-072-1(34)-A	1990	162	186

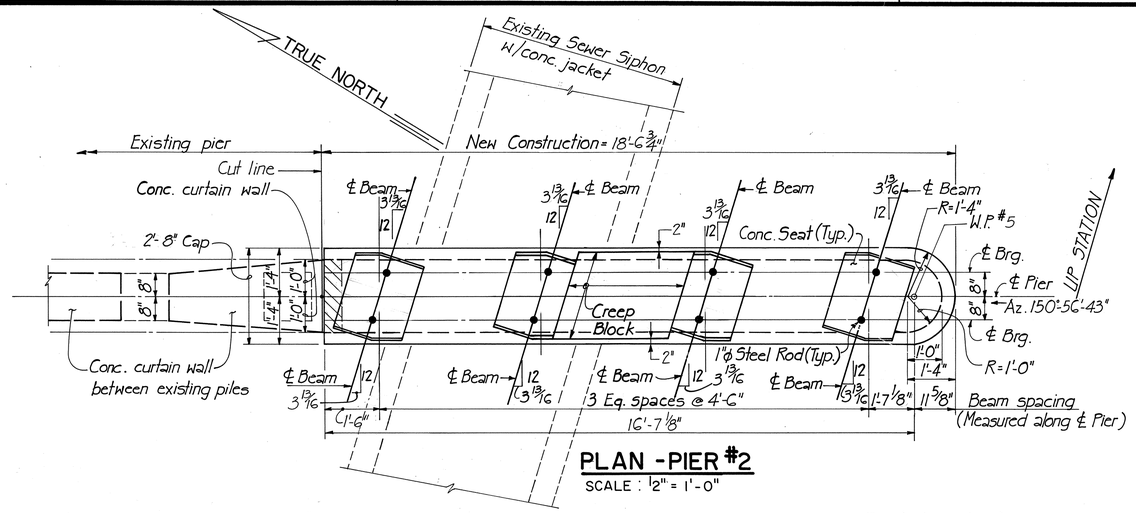

PLAN - PIER #2

SCALE : 1/2" = 1'-0"

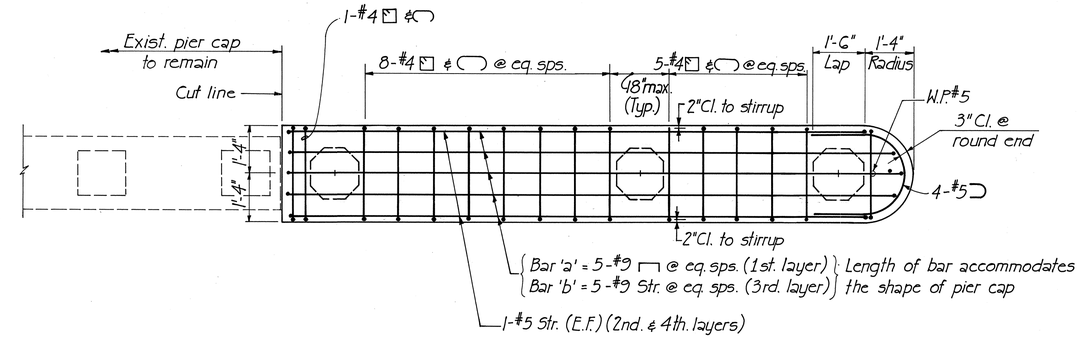

CAP REINFORCING PLAN - PIER #2

SCALE: 1/2" = 1'-0"

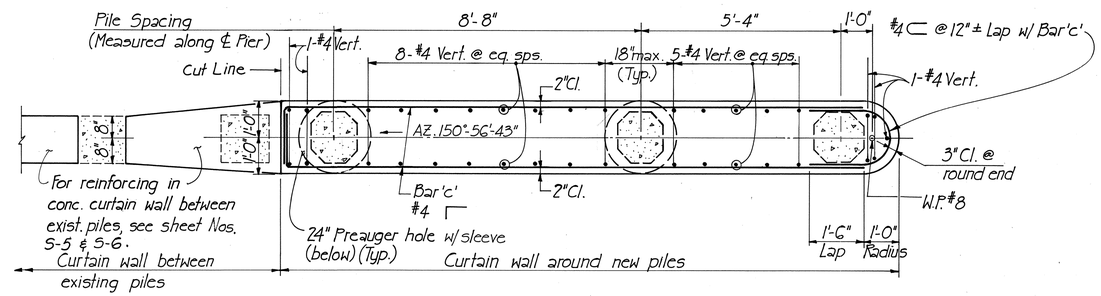

PILE & CONCRETE CURTAIN WALL REINFORCING PLAN - PIER #2

SCALE: 1/2" = 1'-0"

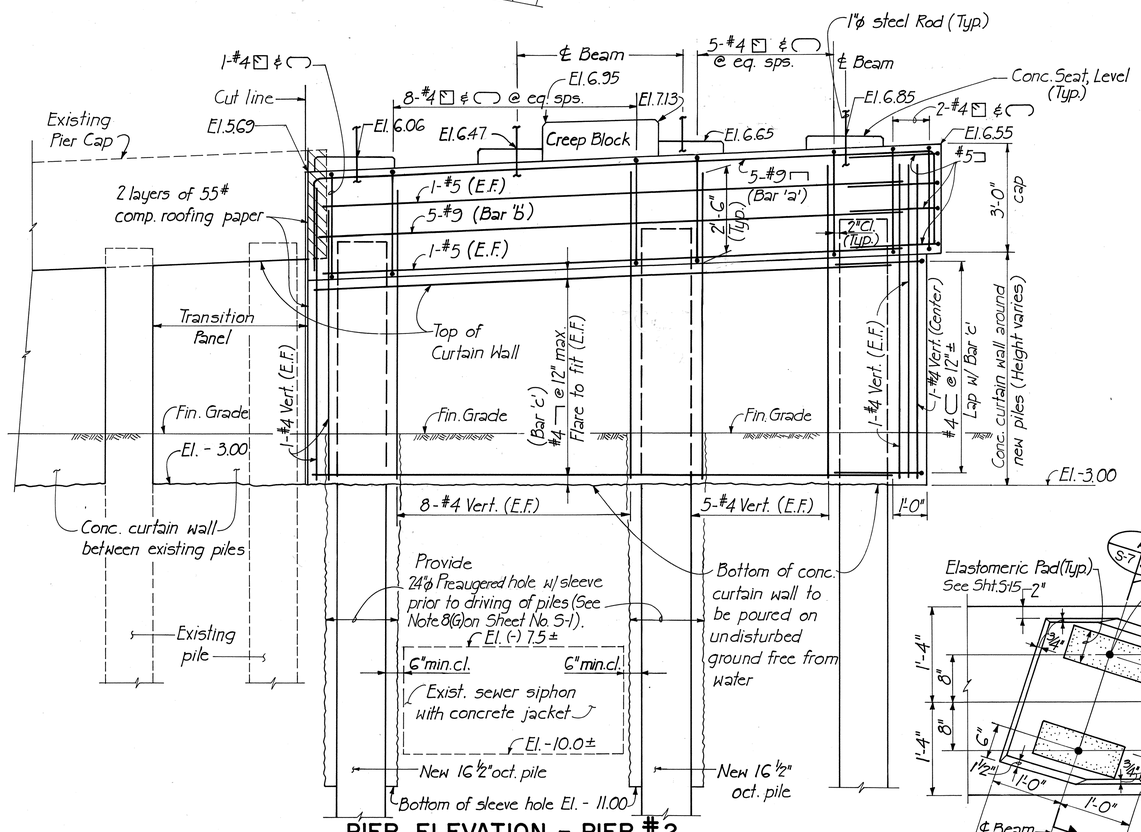

PIER ELEVATION - PIER #2

SCALE : 1/2" = 1'-0"

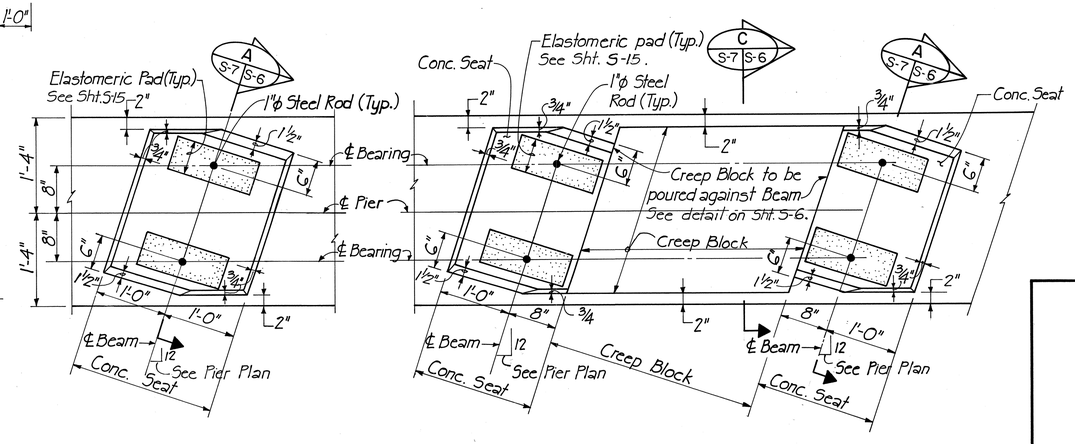

PLAN - TYPICAL CONCRETE SEAT AND CREEP BLOCK AT PIER #2

SCALE : 1" = 1'-0"

HU PANG CHEN
REGISTERED PROFESSIONAL ENGINEER
No. 3865-S
HAWAII, U.S.A.

THIS WORK WAS PREPARED BY ME OR UNDER MY SUPERVISION.

Hupang Chen

STATE OF HAWAII
DEPARTMENT OF TRANSPORTATION
HIGHWAYS DIVISION

WAILUPE STREAM BRIDGE WIDENING

PIER #2 DETAILS

KALANIANAOLE HIGHWAY
Wailupe Circle to East Hind Drive
F.A. Project No. F-072-1(34)-A

SCALE : As shown DATE : JUNE 30, 1990

SHEET No. S-7 OF 19 SHEETS

ORIGINAL PLAN	SURVEY PLOTTED BY	DATE
	DRAWN BY	
	TRACED BY	
NOTE BOOK	DESIGNED BY	
	QUANTITIES BY	
No.	CHECKED BY	

FED. ROAD DIST. NO.	STATE	FED. AID PROJ. NO.	FISCAL YEAR	SHEET NO.	TOTAL SHEETS
HAWAII	HAW.	F-072-1(34)-A	1990	163	186

LEGEND

- New 16 1/2" Oct. Pile
- Battered New 16 1/2" Oct. Pile (1:4)
- New 16 1/2" Oct. Pile driven in Preauger Hole w/ sleeve.
- Existing structure to be removed.
- Existing structure to remain.

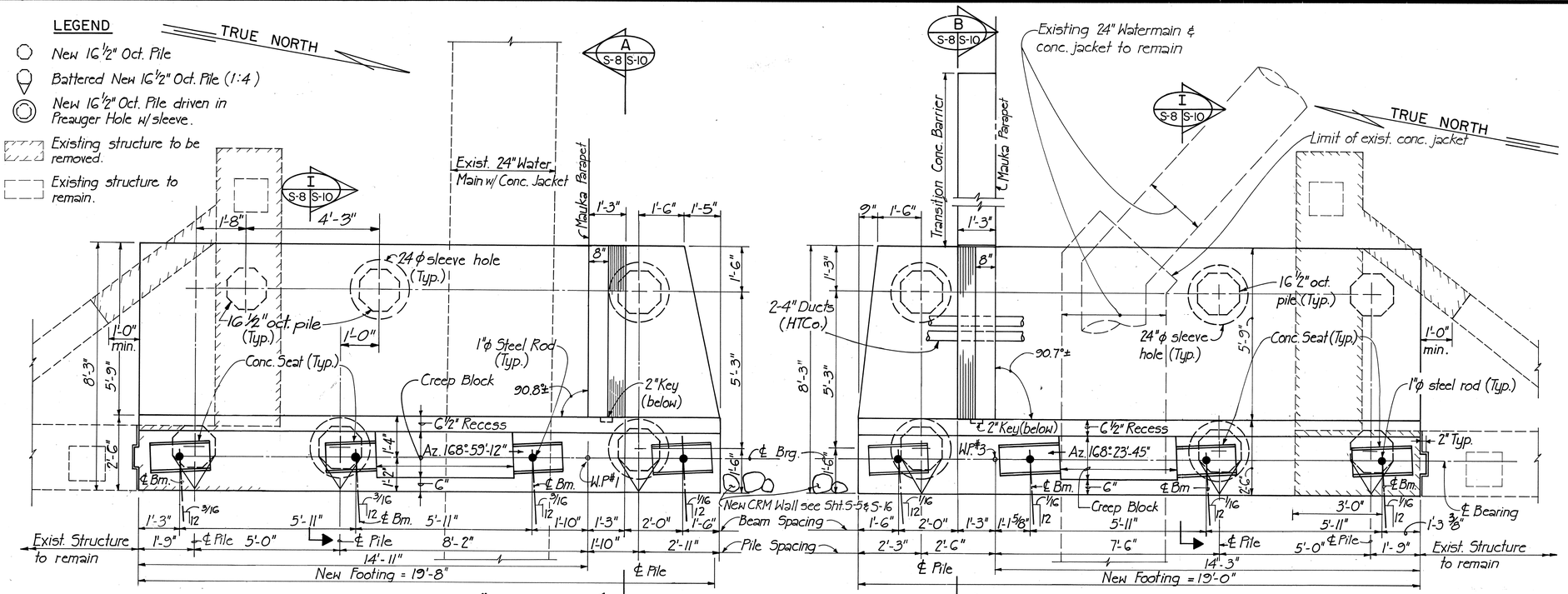

NOTES:

1. The Contractor shall verify the location and size of notch in footing to clear the new and the existing concrete jacket. In case the dimensions are different from that shown on the plans, the Contractor shall notify the Engineer immediately.
2. For concrete seat and creep block details see sheet No. S-11.
3. For 1" φ Steel Rod detail see Sheet No. S-15.

NOTE 'A':
Two layers of 55# comp. roofing paper between structures.

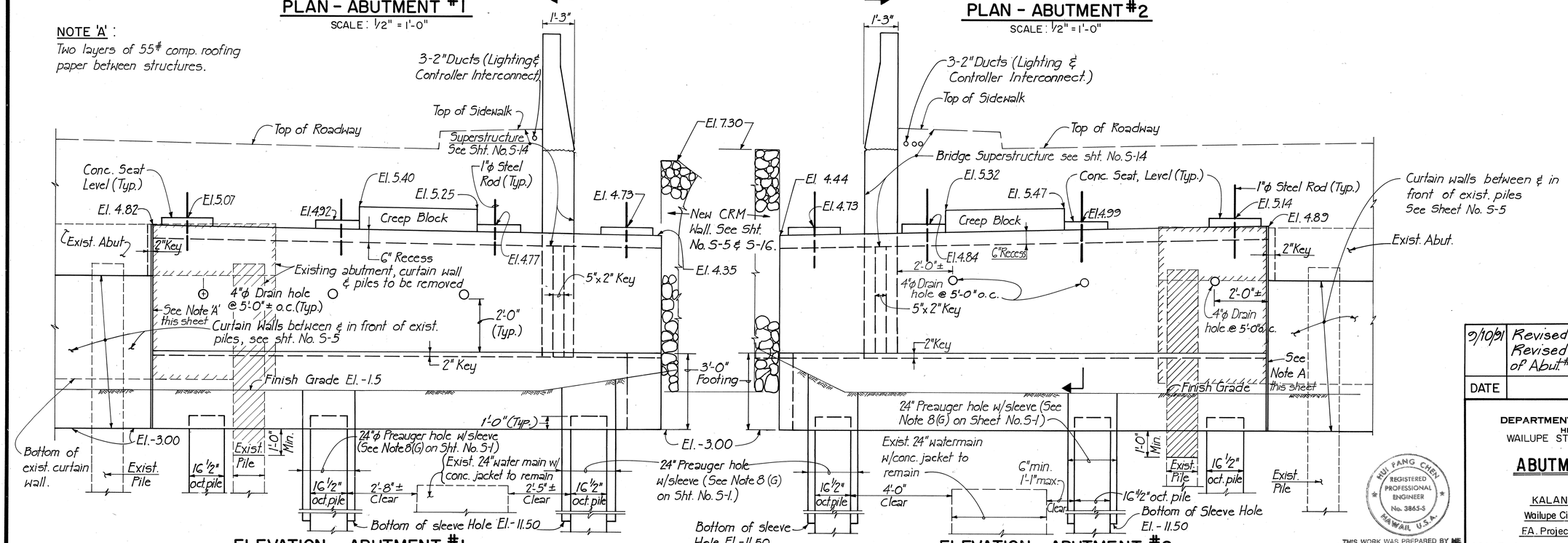

DATE	REVISIONS
9/10/91	Revised Legend of Battered Pile. Revised Plans and Elevations of Abut. #1 & Abut. #2 to add 24" Water Line.

STATE OF HAWAII
DEPARTMENT OF TRANSPORTATION
HIGHWAYS DIVISION
WAILUPE STREAM BRIDGE WIDENING

ABUTMENTS #1 AND #2 DETAILS

KALANIANAOLE HIGHWAY
Wailupe Circle to East Hind Drive
F.A. Project No. F-072-1(34)-A

SCALE: As shown DATE: JUNE 30, 1990

HUI PANG CHEN
REGISTERED PROFESSIONAL ENGINEER
No. 3865-S
HAWAII, U.S.A.

THIS WORK WAS PREPARED BY ME OR UNDER MY SUPERVISION.
Hui Pang Chen

SHEET No. S-8 OF 19 SHEETS

C.O. 163

ORIGINAL PLAN | DATE | SURVEY PLOTTED BY | DRAWN BY | TRACED BY | DESIGNED BY | NOTE BOOK | QUANTITIES BY | No. | CHECKED BY

FED. ROAD DIST. NO.	STATE	FED. AID PROJ. NO.	FISCAL YEAR	SHEET NO.	TOTAL SHEETS
HAWAII	HAW.	F-072-1(34)-A	1990	164	186

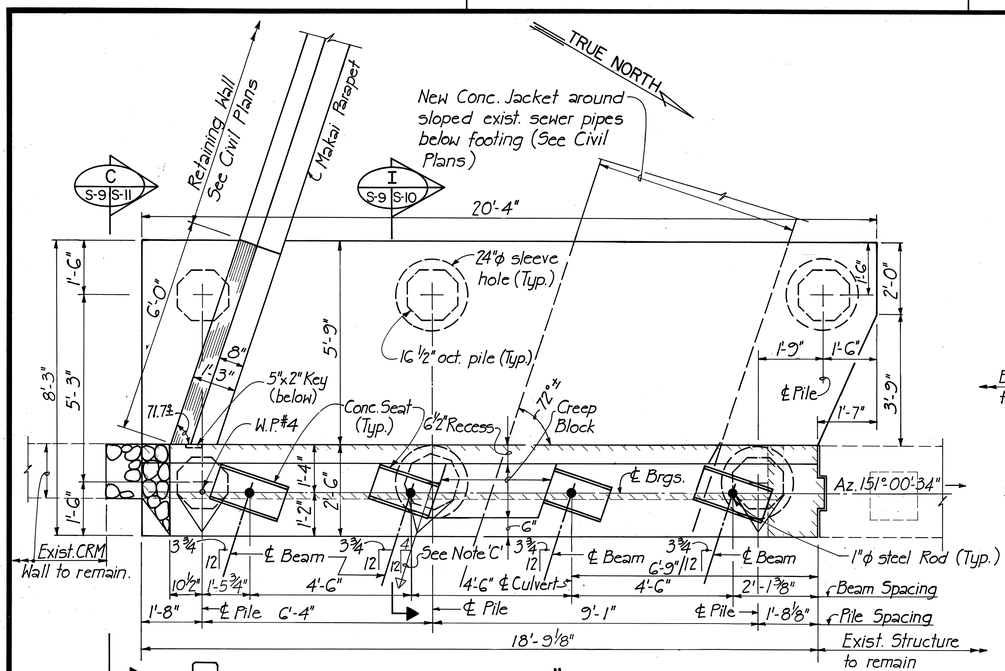

PLAN - ABUTMENT #3

SCALE : 1/2" = 1'-0"

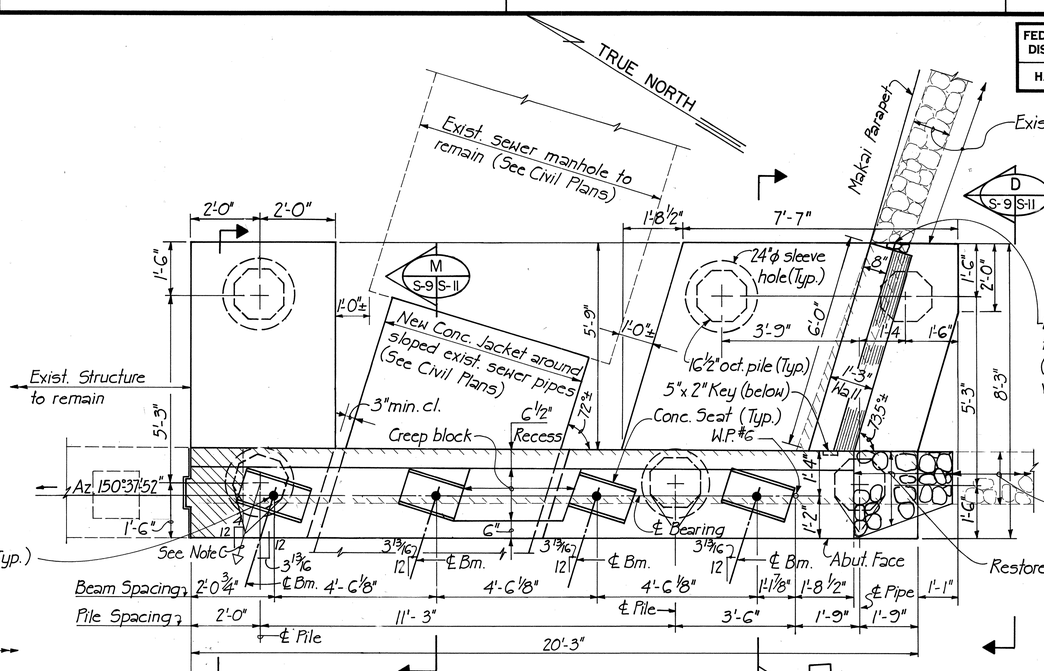

PLAN - ABUTMENT #4

SCALE : 1/2" = 1'-0"

NOTE 'C' :
This pile to be driven in a sleeve on a batter of 1 horizontal to 4 vertical. Battered piles shall be aligned parallel to sewer pipes.

NOTE 'B' :
Where the existing wall needs to be removed for new footing or wall construction, the contractor shall restore the removed portion to match the existing wall. Payment will be made under "Cement Rubble Masonry".

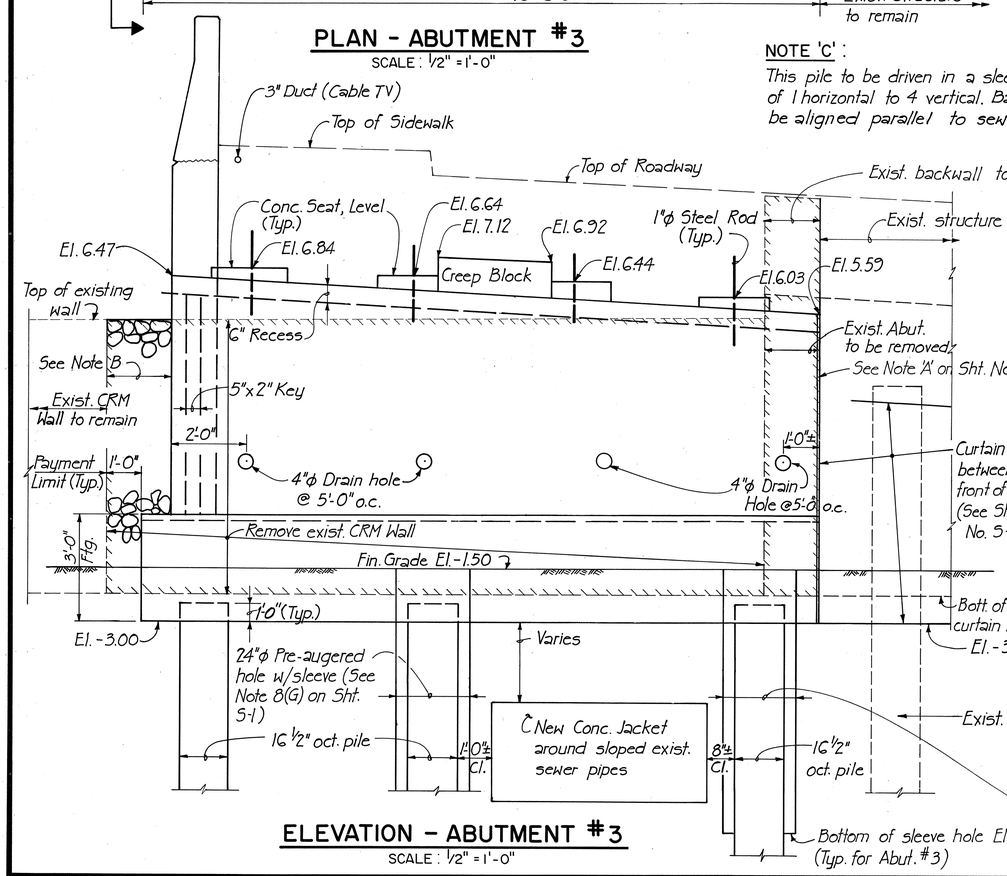

ELEVATION - ABUTMENT #3

SCALE : 1/2" = 1'-0"

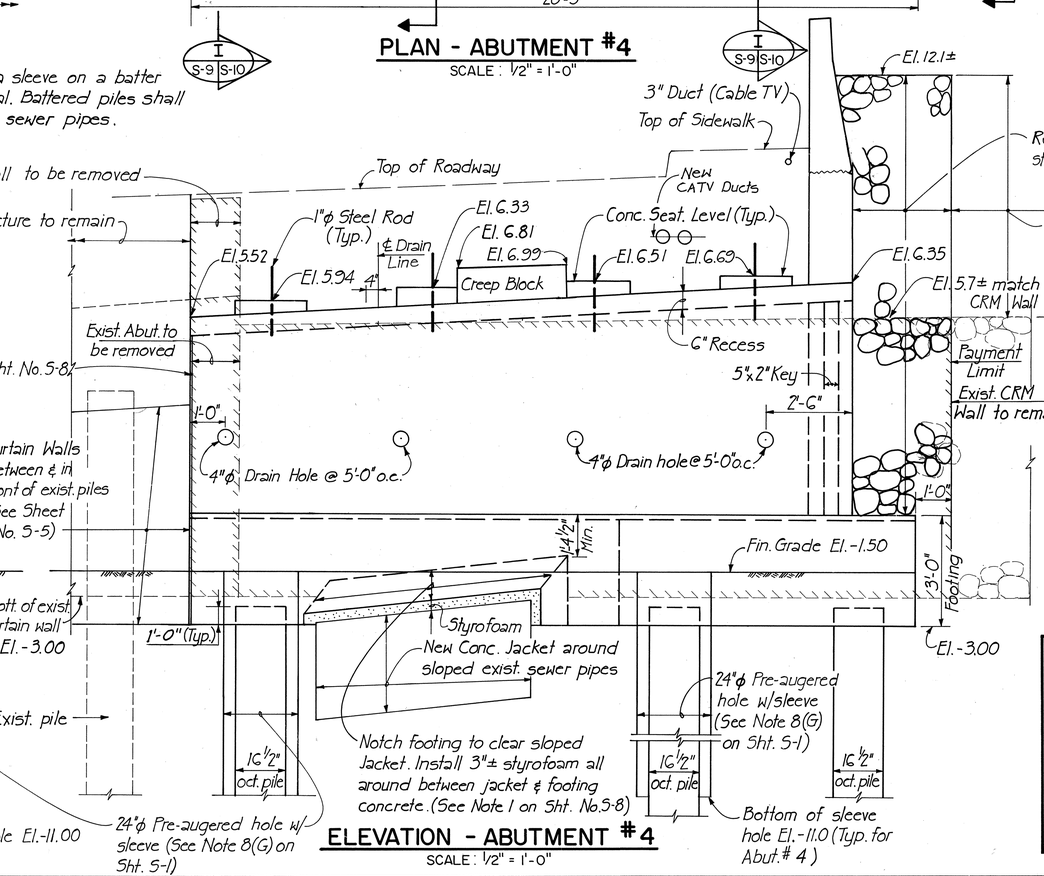

ELEVATION - ABUTMENT #4

SCALE : 1/2" = 1'-0"

NOTES :

1. See Notes 1, 2 & 3 on Sheet No. S-8
2. See Legend on Sheet No. S-8

HUI PANG CHEN
REGISTERED PROFESSIONAL ENGINEER
No. 3865-S
HAWAII, U.S.A.

THIS WORK WAS PREPARED BY ME OR UNDER MY SUPERVISION.

Hui Pang Chen

STATE OF HAWAII
DEPARTMENT OF TRANSPORTATION
HIGHWAYS DIVISION
WAILUPE STREAM BRIDGE WIDENING

ABUTMENTS #3 AND #4 DETAILS

KALANIANAOLE HIGHWAY
Wailupe Circle to East Hind Drive
F.A. Project No. F-072-1(34)-A

SCALE : As shown DATE : JUNE 30, 1990

SHEET No. S-9 OF 19 SHEETS

ORIGINAL PLAN	SURVEY PLOTTED BY	DATE
	DRAWN BY	
	TRACED BY	
	DESIGNED BY	
NOTE BOOK	QUANTITIES BY	
No.	CHECKED BY	

FED. ROAD DIST. NO.	STATE	FED. AID PROJ. NO.	FISCAL YEAR	SHEET NO.	TOTAL SHEETS
HAWAII	HAW.	F-072-1(34)-A	1990	165	186

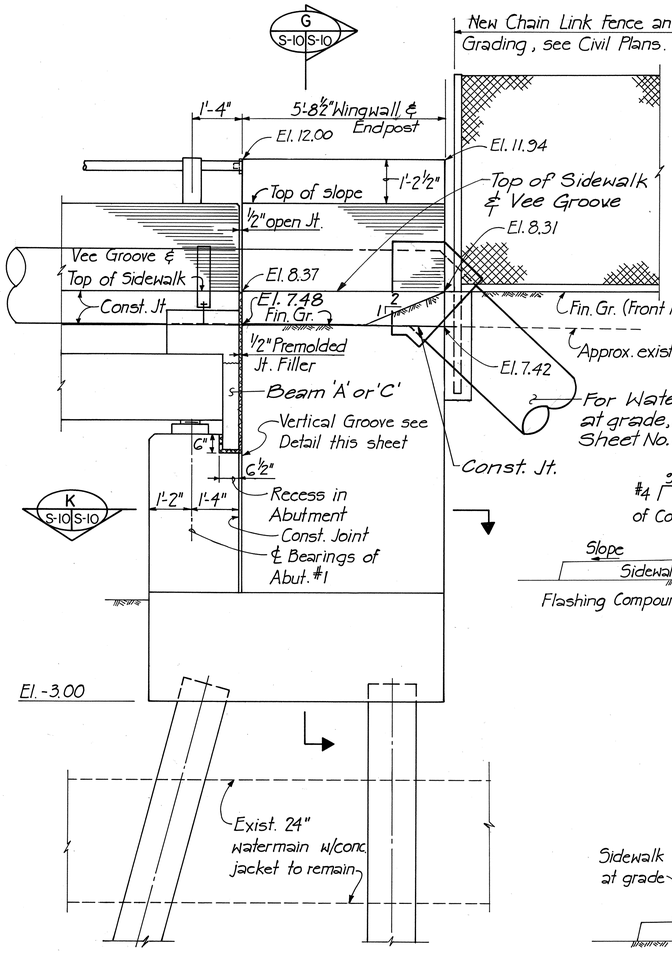

VIEW A
SCALE: ½" = 1'-0" (S-8 | S-10)

ABUTMENT #1

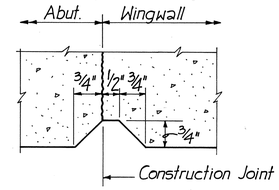

VERTICAL GROOVE DETAIL
HALF SIZE

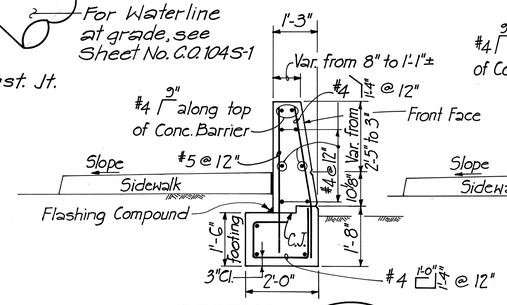

SECTION J
SCALE: ½" = 1'-0" (S-10 | S-10)

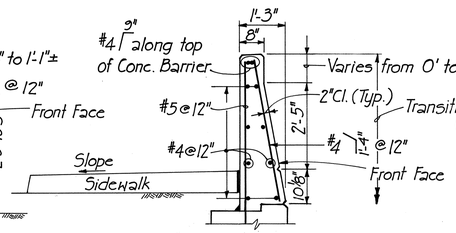

SECTION H
SCALE: ½" = 1'-0" (S-10 | S-10)

SECTION L
SCALE: ½" = 1'-0" (S-10 | S-10)

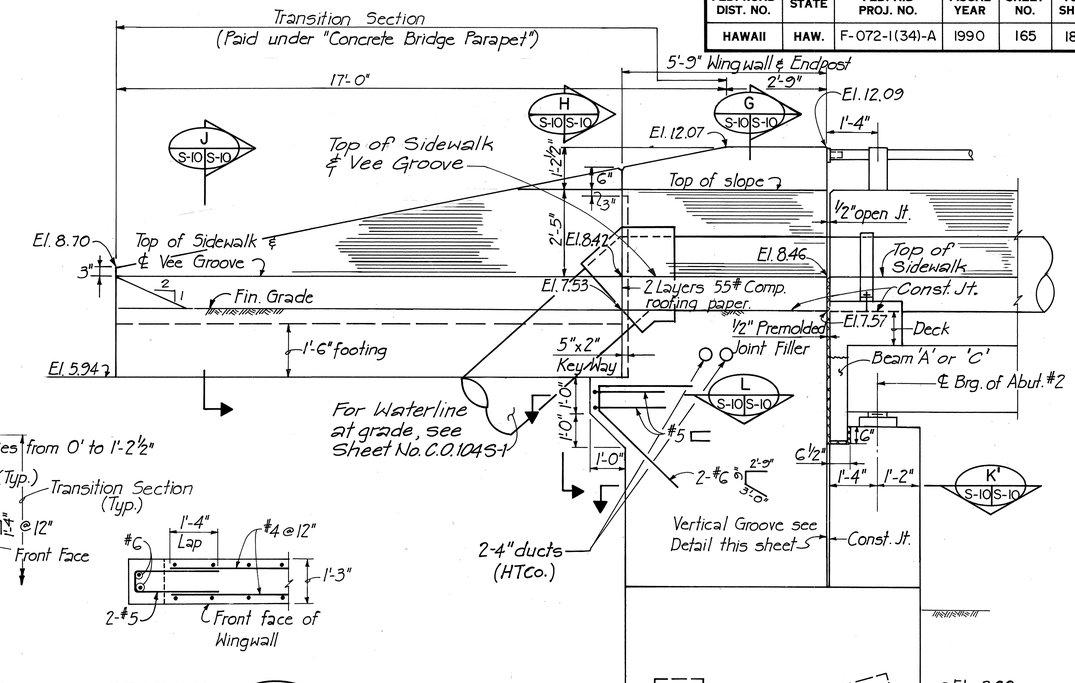

VIEW B
SCALE: ½" = 1'-0" (S-8 | S-10)

ABUTMENT #2

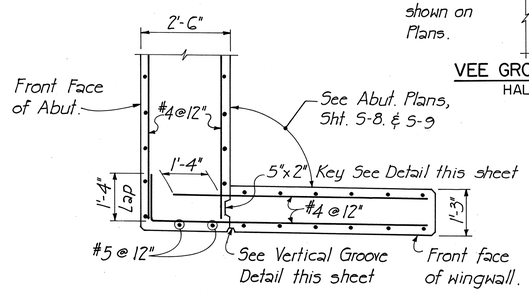

SECTION K
SCALE: ½" = 1'-0" (S-10 | S-10, S-11)

(SECTION K' OPPOSITE HAND)

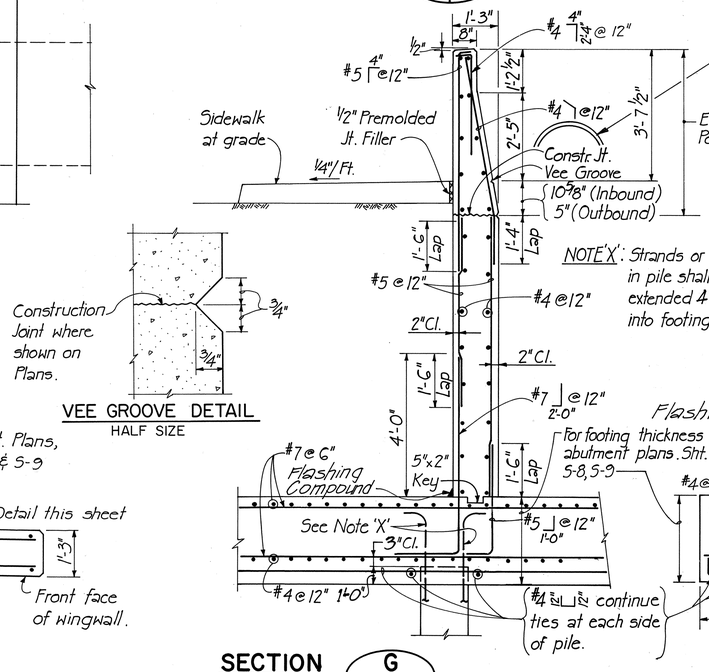

NOTE 'X': Strands or re-bars in pile shall be extended 4'-0" min. into footing.

VEE GROOVE DETAIL
HALF SIZE

SECTION G
SCALE: ½" = 1'-0" (S-10 | S-10, S-11)

TYPICAL WINGWALL SECTION
SCALE: ½" = 1'-0"

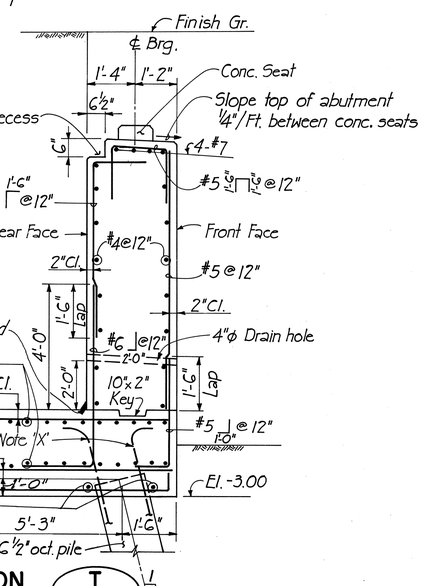

SECTION I
SCALE: ½" = 1'-0" (S-8, S-9 | S-10)

TYPICAL ABUTMENT SECTION
SCALE: ½" = 1'-0"

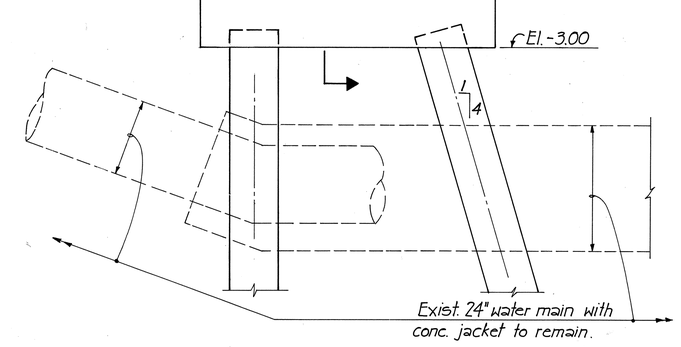

VIEW B
SCALE: ½" = 1'-0" (S-8 | S-10)

ABUTMENT #2

DATE	REVISIONS
9/10/91	Revised Views A S-8 S-10 & B S-8 S-10 and Section G S-10 S-10 to add 24" Water Line.

STATE OF HAWAII
DEPARTMENT OF TRANSPORTATION
HIGHWAYS DIVISION
WAILUPE STREAM BRIDGE WIDENING

ABUTMENT SECTIONS

SHEET 1 OF 2

KALANIANAOLE HIGHWAY
Wailupe Circle to East Hind Drive
FA. Project No. F-072-1(34)-A

SCALE: As shown — DATE: JUNE 30, 1990

SHEET No. S-10 OF 19 SHEETS

HUI PANG CHEN — REGISTERED PROFESSIONAL ENGINEER No. 3865-S — HAWAII, U.S.A.

THIS WORK WAS PREPARED BY ME OR UNDER MY SUPERVISION.
Hui Pang Chen

ORIGINAL PLAN	
SURVEY PLOTTED BY	
DRAWN BY	
TRACED BY	
DESIGNED BY	
NOTE BOOK	QUANTITIES BY
	CHECKED BY
No.	

DATE

C.O.165

FED. ROAD DIST. NO.	STATE	FED. AID PROJ. NO.	FISCAL YEAR	SHEET NO.	TOTAL SHEETS
HAWAII	HAW.	F-072-1(34)-A	1990	166	186

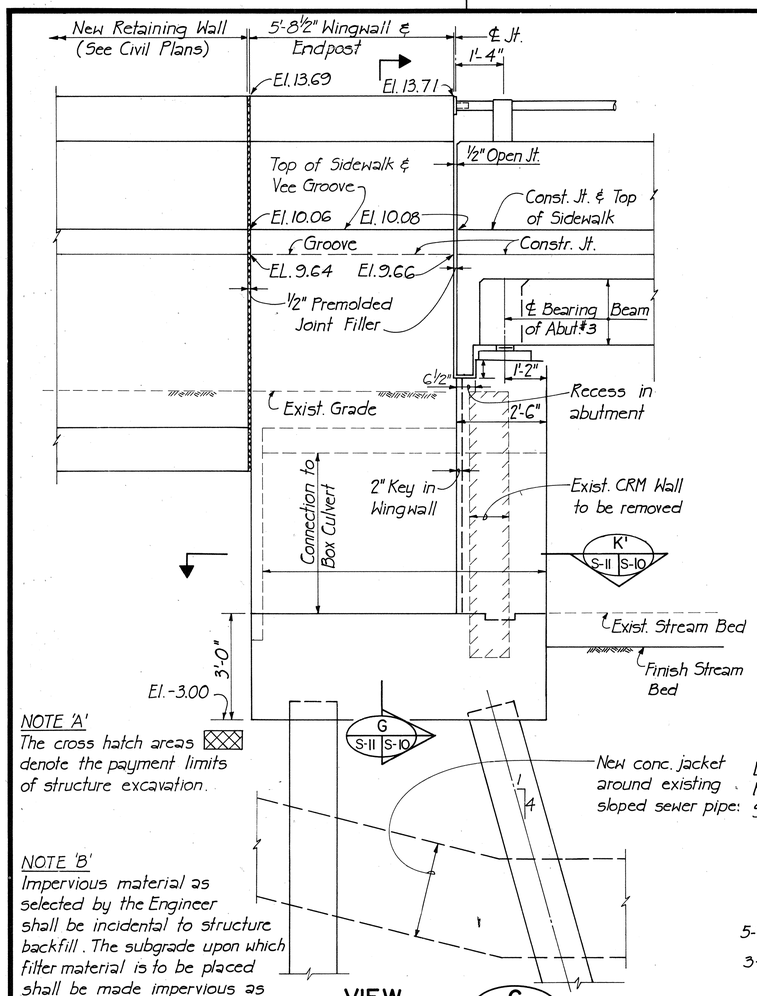

NOTE 'A'
The cross hatch areas denote the payment limits of structure excavation.

NOTE 'B'
Impervious material as selected by the Engineer shall be incidental to structure backfill. The subgrade upon which filter material is to be placed shall be made impervious as possible by pneumatic tamping or other approved methods.

VIEW C (S-9 | S-11)
SCALE: ½" = 1'-0"

ABUTMENT #3

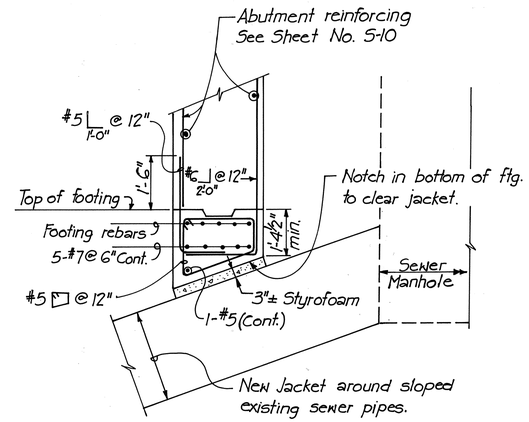

SECTION M (S-9 | S-11)
SCALE: ½" = 1'-0"

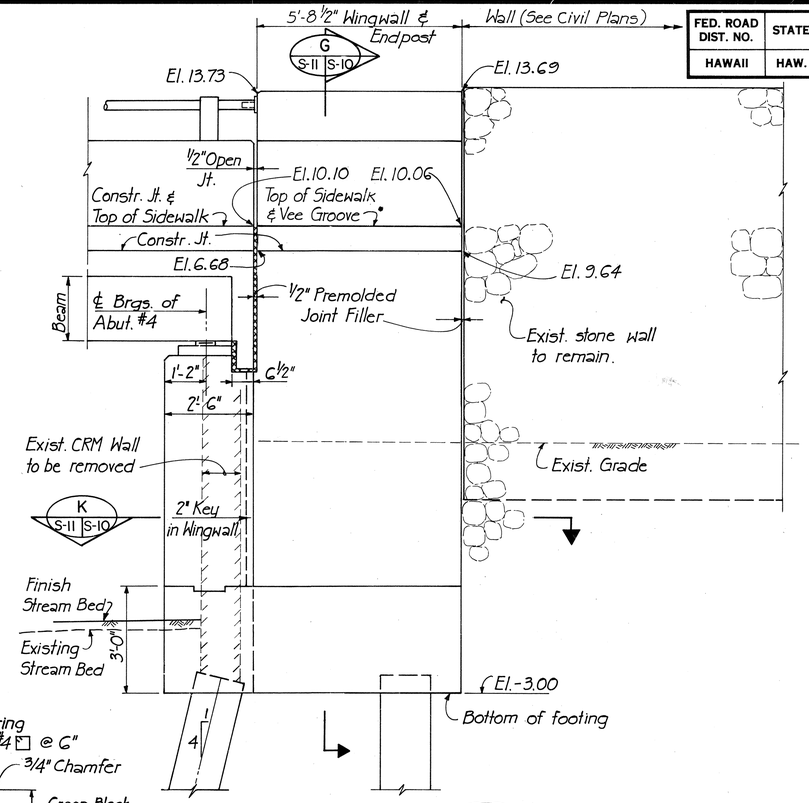

VIEW D (S-9 | S-11)
SCALE: ½" = 1'-0"

ABUTMENT #4

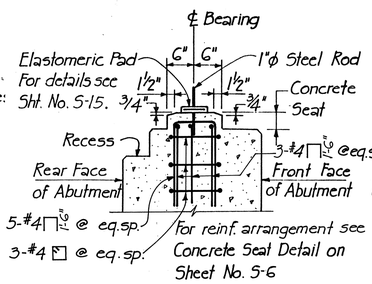

SECTION A (S-11 | S-11)
SCALE: ¾" = 1'-0"

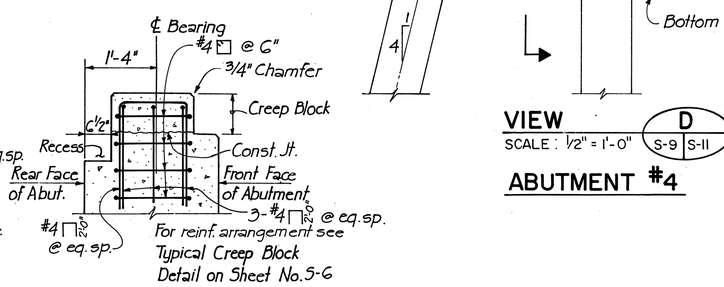

SECTION E (S-11 | S-11)
SCALE: ¾" = 1'-0"

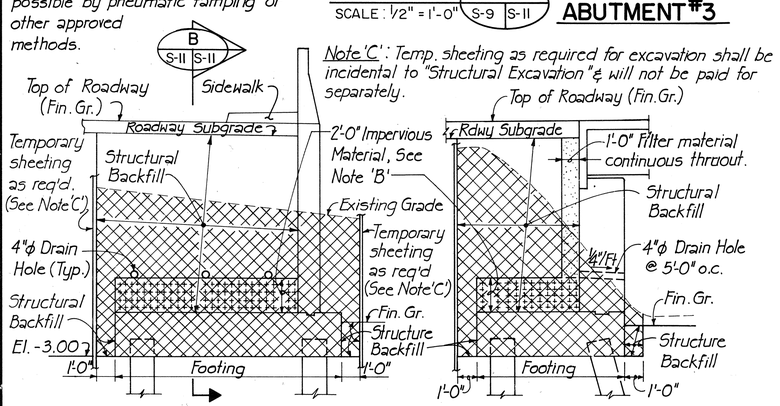

Note 'C': Temp. sheeting as required for excavation shall be incidental to "Structural Excavation" & will not be paid for separately.

CROSS SECTION

SECTION B (S-11 | S-11)

PAYMENT LIMITS
N.T.S.

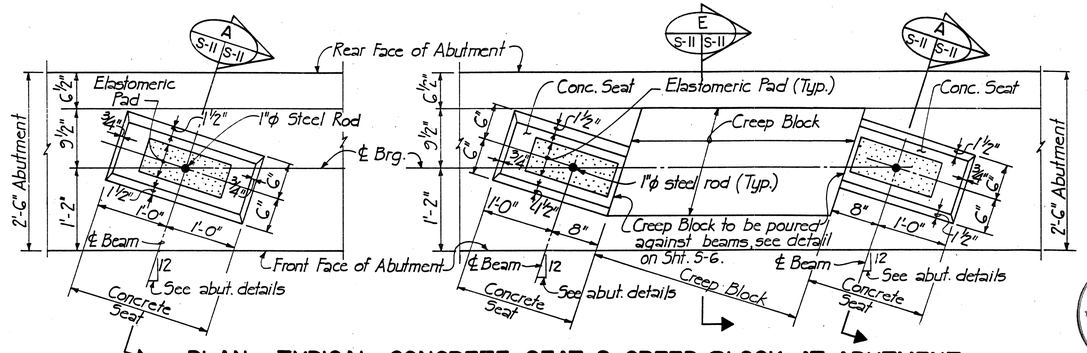

PLAN - TYPICAL CONCRETE SEAT & CREEP BLOCK AT ABUTMENT
SCALE: 1" = 1'-0"

HUI PANG CHEN
REGISTERED PROFESSIONAL ENGINEER
No. 3865-S
HAWAII, U.S.A.

THIS WORK WAS PREPARED BY ME OR UNDER MY SUPERVISION.

Hui Pang Chen

STATE OF HAWAII
DEPARTMENT OF TRANSPORTATION
HIGHWAYS DIVISION
WAILUPE STREAM BRIDGE WIDENING

ABUTMENT SECTIONS

SHEET 2 OF 2

KALANIANAOLE HIGHWAY
Wailupe Circle to East Hind Drive
FA. Project No. F-072-1(34)-A

SCALE: As shown DATE: JUNE 30, 1990

SHEET No. S-11 OF 19 SHEETS

ORIGINAL PLAN | DATE | SURVEY PLOTTED BY | DRAWN BY | TRACED BY | DESIGNED BY | NOTE BOOK | QUANTITIES BY | No. | CHECKED BY

FED. ROAD DIST. NO.	STATE	FED. AID PROJ. NO.	FISCAL YEAR	SHEET NO.	TOTAL SHEETS
HAWAII	HAW.	F-072-1(34)-A	1990	167	186

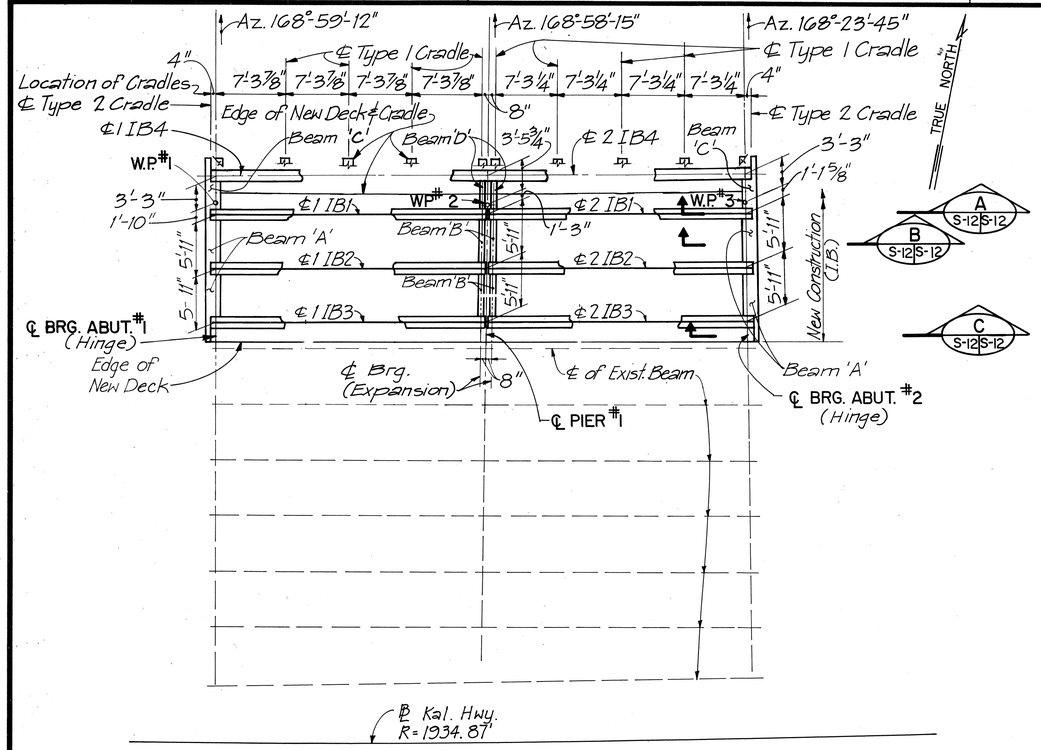

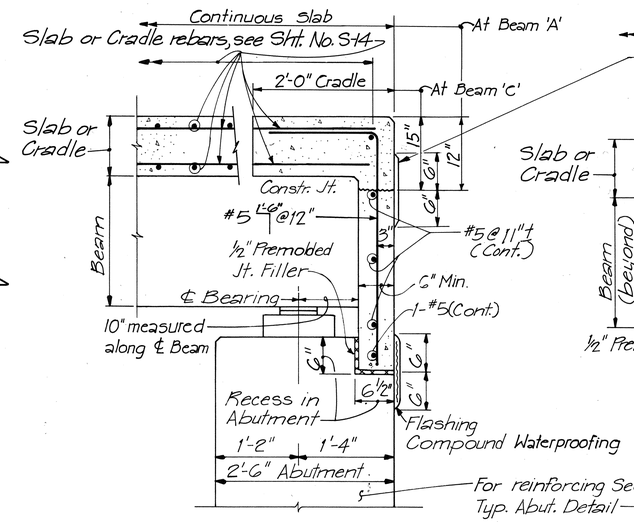

SECTION (AT BEAMS) A S-12 S-12 S-13

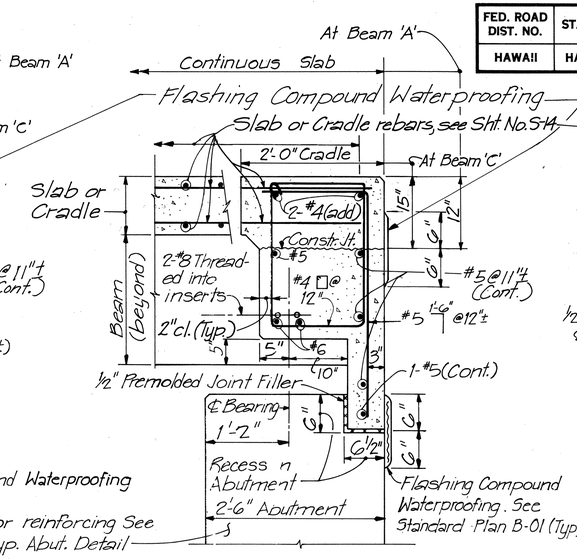

SECTION (BETWEEN BEAMS) B S-12 S-12 S-13

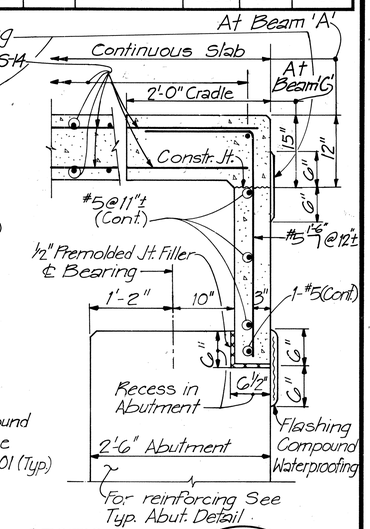

SECTION (OUTSIDE EXTERIOR BEAMS) C S-12 S-12 S-13

TYPICAL SECTION FOR BEAM 'A' & BEAM 'C' (AT ABUTMENT)

SCALE: 1" = 1'-0"

NOTE: For details of Beam 'B' at piers, See Sht. Nos. S-13 & S-16.

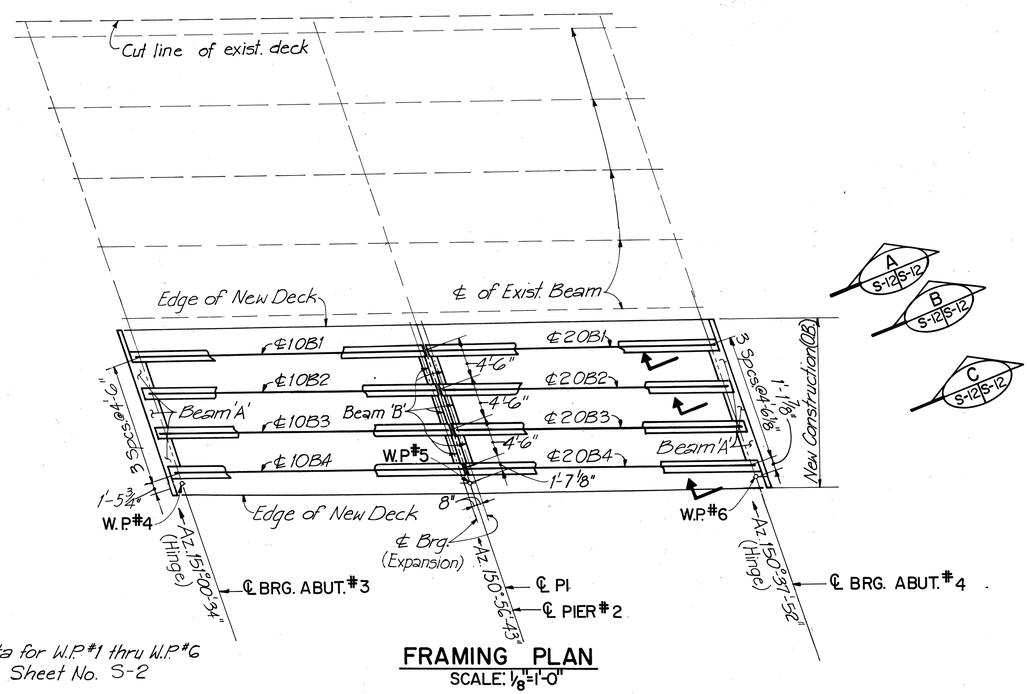

NOTE: Data for W.P. #1 thru W.P. #6 See Sheet No. S-2

FRAMING PLAN

SCALE: ⅛" = 1'-0"

BEAM MARK	BEAM LENGTH "L" ℄ BRG. TO ℄ BRG.	BEAM TYPE
1 IB 1	28.96'	II
1 IB 2	28.96'	↕
1 IB 3	28.96'	
2 IB 1	28.79'	
2 IB 2	28.85'	
2 IB 3	28.91'	II
1 IB 4	28.96'	II
2 IB 4	28.75'	II
1 OB 1	31.28'	I
1 OB 2	31.29'	II
1 OB 3	31.30'	II
1 OB 4	31.30'	II
2 OB 1	31.29'	I
2 OB 2	31.32'	II
2 OB 3	31.34'	II
2 OB 4	31.37'	II

NOTE: Beam length given is horizontal distance between ℄ Bearings.

DATE	REVISIONS
9/10/91	Revised Framing Plan, Typical Section for Beam A at Abutment and Beam Schedule to add 24" Water Line.

HUI PANG CHEN REGISTERED PROFESSIONAL ENGINEER No. 3863-S HAWAII, U.S.A.

THIS WORK WAS PREPARED BY ME OR UNDER MY SUPERVISION.

Hui pang Chen

STATE OF HAWAII
DEPARTMENT OF TRANSPORTATION
HIGHWAYS DIVISION

WAILUPE STREAM BRIDGE WIDENING

FRAMING PLAN

KALANIANAOLE HIGHWAY
Wailupe Circle to East Hind Drive
F.A. Project No. F-072-1(34)-A

SCALE: As shown DATE: JUNE 30, 1990

SHEET No. S-12 OF 19 SHEETS

ORIGINAL PLAN | SURVEY PLOTTED BY | DRAWN BY | TRACED BY | DESIGNED BY | QUANTITIES BY | CHECKED BY | DATE | NOTE BOOK | No.

C.O. 167

FED. ROAD DIST. NO.	STATE	FED. AID PROJ. NO.	FISCAL YEAR	SHEET NO.	TOTAL SHEETS
HAWAII	HAW.	F-072-1(34)-A	1990	168	186

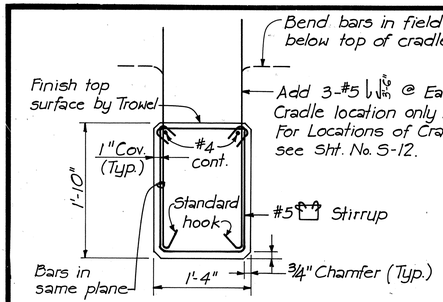

TYPICAL BEAM SECTION FOR BEAMS 1IB4 AND 2IB4
SCALE: 1" = 1'-0"

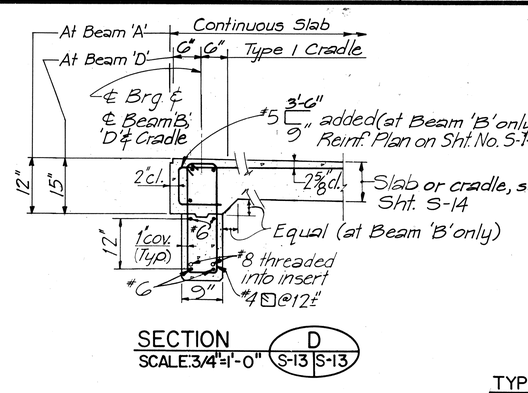

SECTION D S-13 S-13
SCALE: 3/4" = 1'-0"

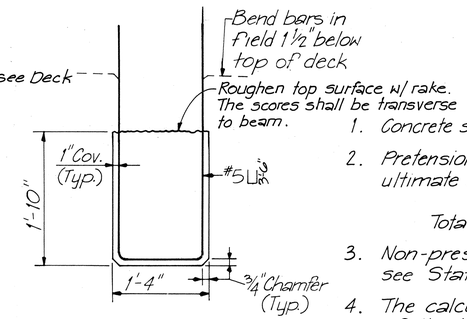

TYPICAL BEAM SECTION FOR BEAMS 1IB1 TO 1IB3, 2IB1 TO 2IB3, 1OB1 TO 1OB4, 2OB1 TO 2OB4
SCALE: 1" = 1'-0"

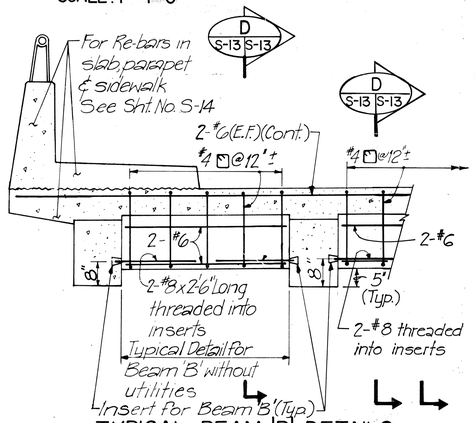

TYPICAL BEAM 'B' DETAILS
SCALE: 1/2" = 1'-0"

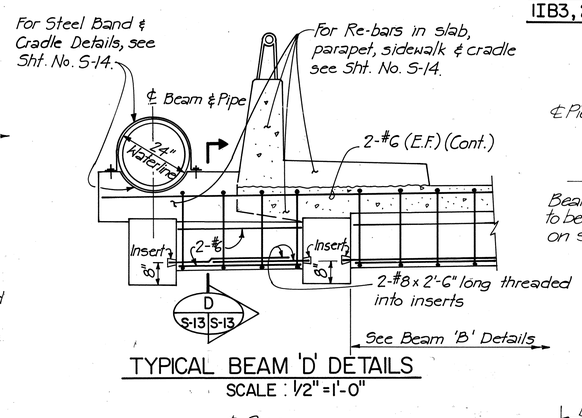

TYPICAL BEAM 'D' DETAILS
SCALE: 1/2" = 1'-0"

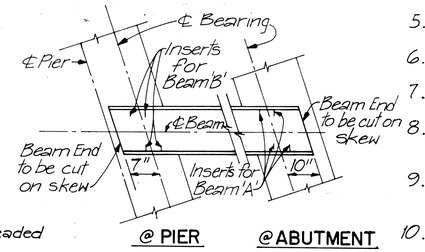

BEAM END PLAN
N.T.S.

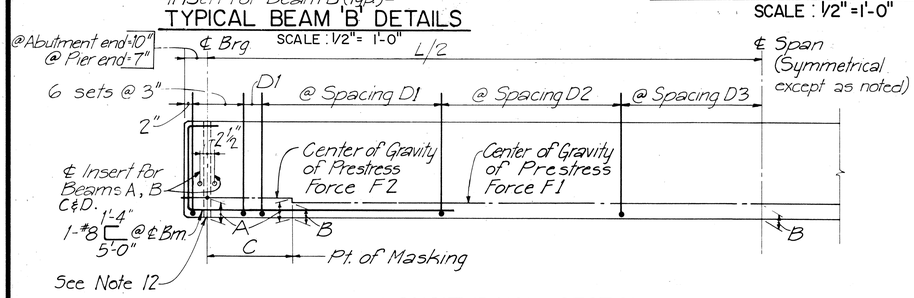

LONGITUDINAL SECTION
N.T.S.

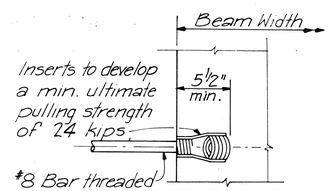

INSERT DETAIL
SCALE: 1 1/2" = 1'-0"

NOTES FOR PRESTRESSED BEAMS

PRETENSIONING

1. Concrete shall have a minimum 28 day compressive strength of 6000 psi.
2. Pretensioned strands shall be 7 wire 7/16"ϕ stress-relieved steel strands (area = 0.115 in²) with an ultimate strength of 270 ksi. For properties see State Standard Specifications.

   Total loss due to creep, shrinkage, elastic shortening and relaxation of steel = 45,000 psi.
3. Non-prestressed reinforcing steel shall be Grade 40 unless otherwise noted. For properties see State Standard Specifications.
4. The calculated camber includes the effect of the initial prestress force and the weight of the beam after removal from bed. Negative values shown for calculated camber indicate a net upward deflection. Caculated camber values shown do not account for any camber growth of the beam. The actual camber shall not exceed the calculated camber shown on the plans by more than 100% at time of installation.
5. The dead load deflection includes the combined effects of the weight of slab, haunch & diaphragm.
6. Strand pattern shall be symmetrical about the longitudinal ℄ of the beam.
7. Strand release sequence shall not induce any lateral deflection of the beam.
8. Contractor shall submit his proposed strand pattern and releasing sequence to the Engineer for approval.
9. During curing care shall be taken to avoid any lateral deflection of the beam due to improper orientation.
10. Lifting devices shall be placed as close as possible to the center line of bearings of the beam. Details and locations of lifting devices shall be submitted to the Engineer for approval. Such approval does not relieve the Contractor of his responsibilities if beam is damaged due to failure of the lifting device.
11. See Framing Plans for locations of diaphragms & beam mark numbers. For beam types and lengths see beam type schedule. Lengths shown do not include effect of elastic shortening.
12. Provide slotted holes at beam ends. For detail see Section D S-15 S-15
13. For beam end skew angles see shts. S-6 thru S-9.

* * AFTER ALL LOSSES

BEAM SCHEDULE

BEAM TYPE	F1. WORKING ** FORCE (KIPS)	F2. WORKING ** FORCE (KIPS)	CALCULATED CAMBER SEE NOTE 4	DEAD LOAD DEFLECTION SEE NOTE 5	LOCATION OF CENTER OF GRAVITY OF PRESTRESS FORCE			STIRRUPS			REQUIRED MIN. ULT. CONC. STRENGTH BEFORE RELEASE OF STRANDS (P.S.I.)	REMARKS
					DIST A	DIST B	DIST. TO PT. OF MASKING C	NO. OF STIRRUPS @ SPACING D1	NO. OF STIRRUPS @ SPACING D2	SPACING D3		
I	496.8K	430.6K	-0.46"	0.23"	8.31"	7.47"	5'-3"	5 @ 9"	5 @ 15"	18"	5,100	
II	397.5K	331.2K	-0.48"	0.19"	7.40"	6.50"	3'-9"	5 @ 9"	5 @ 15"	18"	4,900	

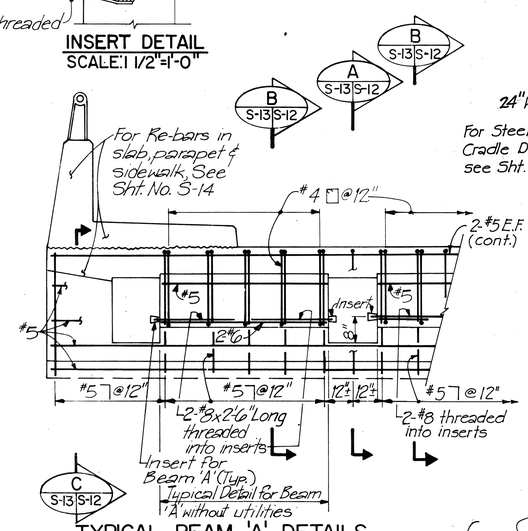

TYPICAL BEAM 'A' DETAILS
SCALE: 1/2" = 1'-0"

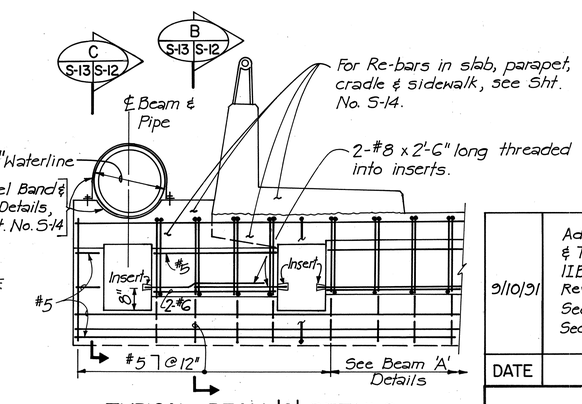

TYPICAL BEAM 'C' DETAILS
SCALE: 1/2" = 1'-0"

DATE	REVISIONS
9/10/91	Added Details of Beam 'C', Beam 'D' & Typical Beam Section for Beams 1IB4 & 2IB4 to add 24" Water Line. Revised Title of Typical Beam Section, Longitudinal Section and Section D S-13 S-13 to add 24" Water Line.

STATE OF HAWAII
DEPARTMENT OF TRANSPORTATION
HIGHWAYS DIVISION

WAILUPE STREAM BRIDGE WIDENING

PRESTRESS BEAM DETAILS

KALANIANAOLE HIGHWAY
Wailupe Circle to East Hind Drive
FA. Project No. F-072-1 (34) -A

SCALE: As shown DATE: JUNE 30, 1990

SHEET No. S-13 OF 19 SHEETS

HUI PANG CHEN
REGISTERED PROFESSIONAL ENGINEER
No. 3865-S
HAWAII, U.S.A.

THIS WORK WAS PREPARED BY ME OR UNDER MY SUPERVISION.
Hui-pang Chen

for [signature] 10/24/91
Chief, Plng. & Engr., B.W.S. Date

SURVEY PLOTTED BY ____ DATE
DRAWN BY ____
TRACED BY ____
DESIGNED BY ____
QUANTITIES BY ____
CHECKED BY ____
ORIGINAL PLAN
NOTE BOOK No. ____

C.0.168

FED. ROAD DIST. NO.	STATE	FED. AID PROJ. NO.	FISCAL YEAR	SHEET NO.	TOTAL SHEETS
HAWAII	HAW.	F-072-1(34)-A	1990	169	186

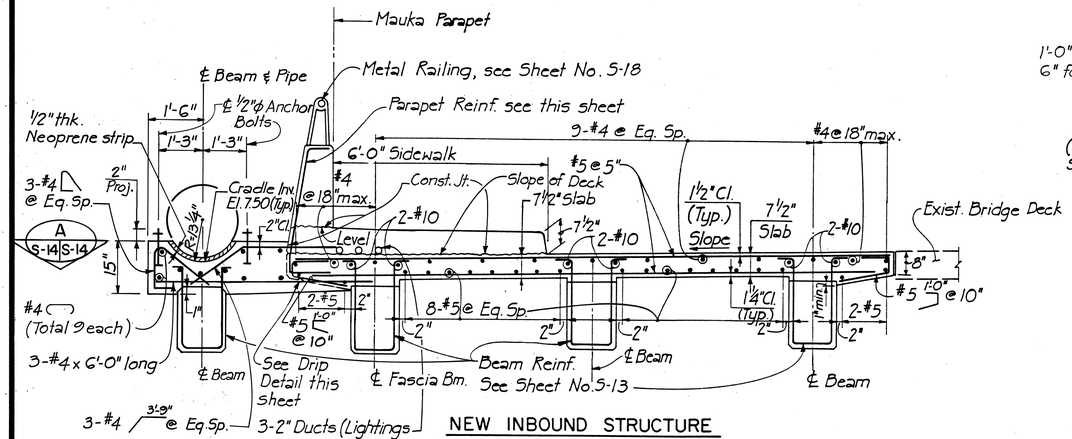

NEW INBOUND STRUCTURE

TYPICAL DECK SECTION

SCALE: 1/2" = 1'-0"
(LOOKING UPSTATION)

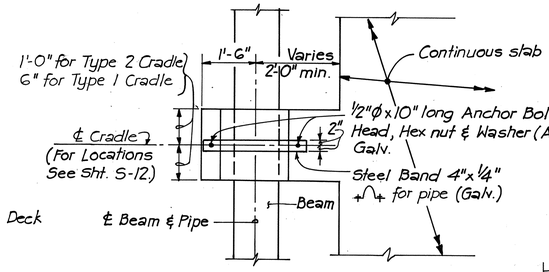

SECTION A

S-14 | S-14

SCALE: 1/2" = 1'-0"

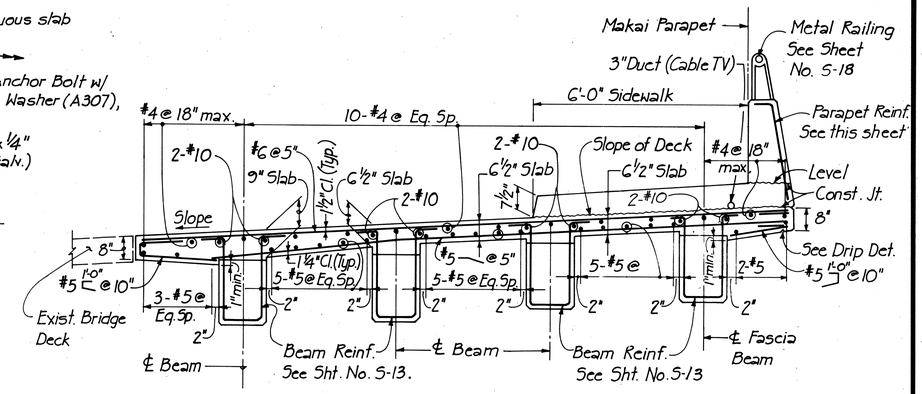

NEW OUTBOUND STRUCTURE

TYPICAL DECK SECTION

SCALE: 1/2" = 1'-0"
(LOOKING UPSTATION)

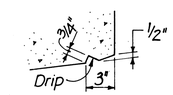

DRIP DETAIL

N.T.S.

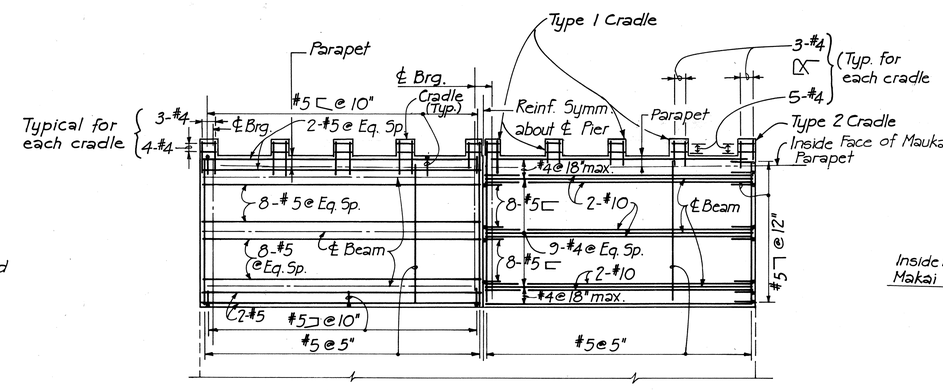

TYP. BOTTOM REINFORCEMENT TYP. TOP REINFORCEMENT

NEW INBOUND STRUCTURE

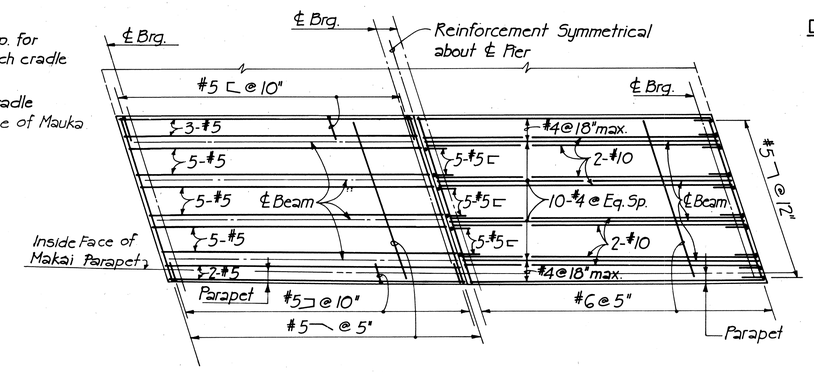

TYP. BOTTOM REINFORCEMENT TYP. TOP REINFORCEMENT

NEW OUTBOUND STRUCTURE

DECK REINFORCING PLAN

NOT TO SCALE

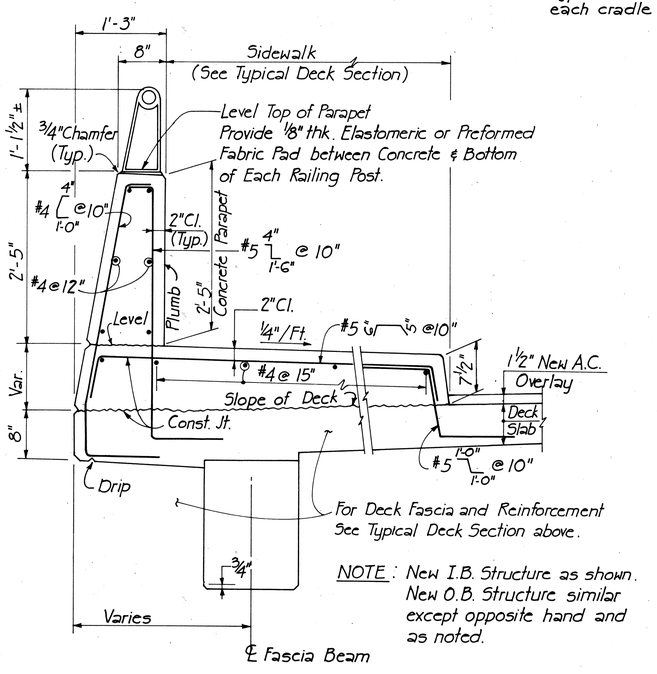

NOTE: New I.B. Structure as shown. New O.B. Structure similar except opposite hand and as noted.

TYPICAL PARAPET DETAIL

SCALE: 1" = 1'-0"

9/10/91	Revised Typical Deck Section of New I.B. Structure & Deck Reinf. Plan of New I.B. Structure. Added Section A (S-14 | S-14) to add 24" Water Line.
DATE	REVISIONS

STATE OF HAWAII
DEPARTMENT OF TRANSPORTATION
HIGHWAYS DIVISION
WAILUPE STREAM BRIDGE WIDENING

DECK REINFORCING PLANS AND SECTIONS

KALANIANAOLE HIGHWAY
Wailupe Circle to East Hind Drive
F.A. Project No. F-072-1 (34)-A

SCALE: As shown DATE: JUNE 30, 1990

SHEET No. S-14 OF 19 SHEETS

HUI PANG CHEN
REGISTERED PROFESSIONAL ENGINEER
No. 3863-S
HAWAII, U.S.A.

THIS WORK WAS PREPARED BY ME OR UNDER MY SUPERVISION.
Hui-pang Chen

for [signature] 10/24/91
Chief, Plng. & Engr., B.W.S. Date

SURVEY PLOTTED BY	DATE
DRAWN BY	
TRACED BY	
DESIGNED BY	
QUANTITIES BY	
CHECKED BY	
ORIGINAL PLAN	
NOTE BOOK	
No.	

C.O. 169

FED. ROAD DIST. NO.	STATE	FED. AID PROJ. NO.	FISCAL YEAR	SHEET NO.	TOTAL SHEETS
HAWAII	HAW.	F-072-1(34)-A	1990	170	186

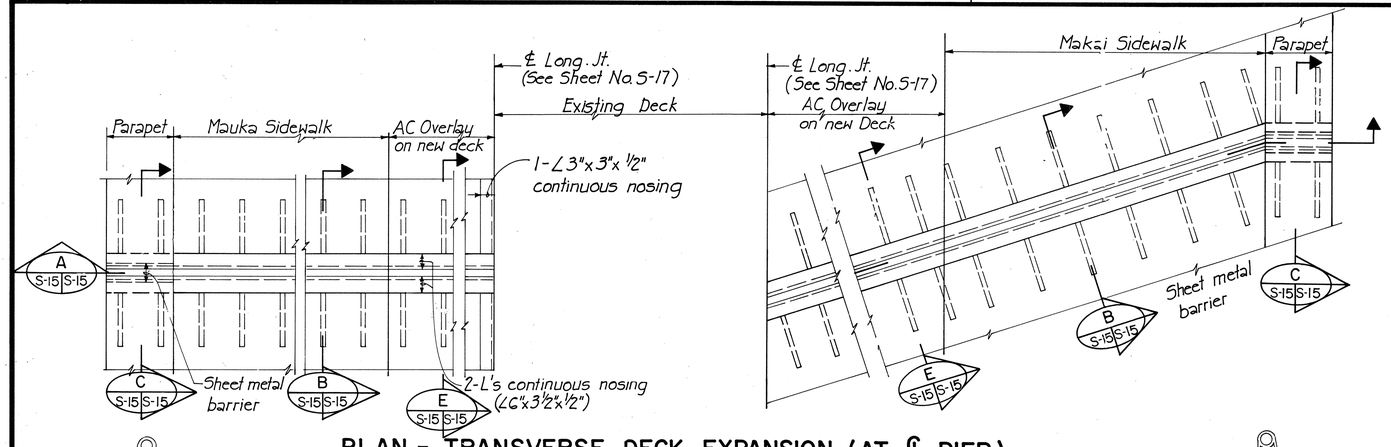

PLAN - TRANSVERSE DECK EXPANSION (AT ℄ PIER)

SCALE: 3/4" = 1'-0"

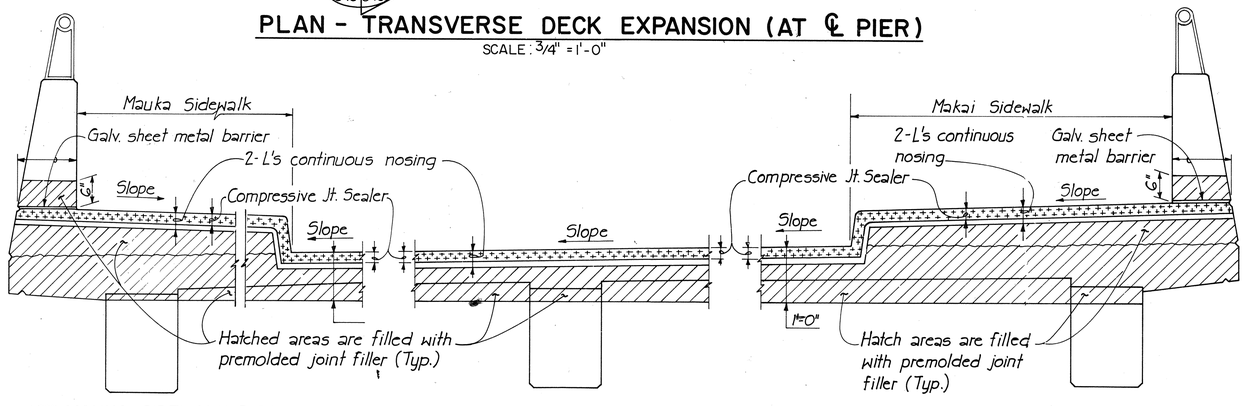

AT MAUKA SIDEWALK & PARAPET — AT BRIDGE DECK — AT MAKAI SIDEWALK & PARAPET

SECTION A

SCALE: 3/4" = 1'-0" (S-15 | S-15)

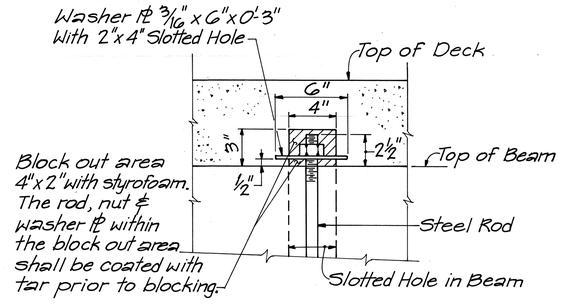

DETAIL 2

SCALE: 2" = 1'-0" (S-15 | S-15)

NOTES:

1. Bottom of Elastomeric pad shall be secured against displacement with an adhesive approved by the Engineer.
2. Slotted hole in beam for Hinge Bearing shall be filled with non-shrink, non-metallic pre-mixed grout. Slotted hole in beam for Expansion Bearing shall be filled with tar or mastic. The above work shall be done prior to placing deck slab concrete and shall be incidental to Concrete in Bridge.
3. Elastomeric pads, 1"ϕ steel rods, compressive seals, joint filler, protective nosing steel angles, sheet metal barriers and anchor bars shall be incidental to Concrete in Bridge.
4. The protective nosing steel angles shall be ASTM A-36 and hot-dipped galvanized after fabrication.
5. For Longitudinal deck joints & deck joints at abutments, see Sheet No. S-17.

NOTE 'A':
Drill 1"ϕ x 6" deep holes @ 12" o.c. into existing concrete deck. Embed #5 re-bar dowels and epoxy grout. (Clear existing reinforcing)(Typ.)

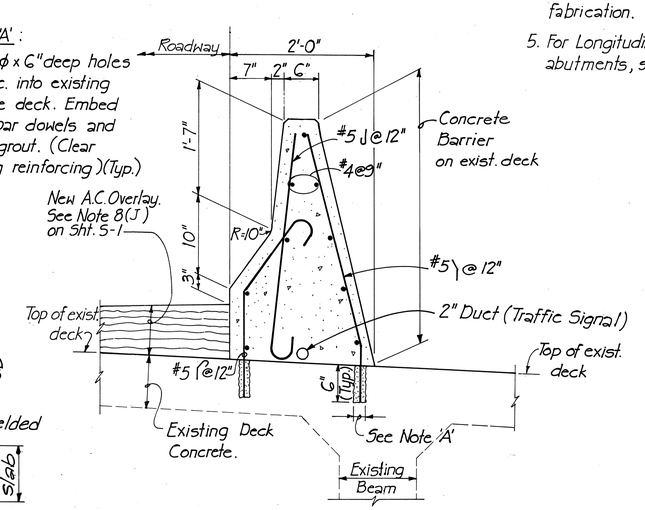

DETAIL 1

SCALE: 1" = 1'-0" (S-4 | S-15)

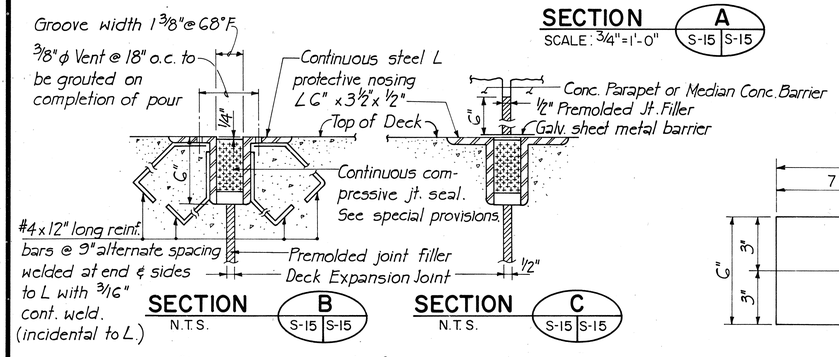

SECTION B

N.T.S. (S-15 | S-15)

SECTION C

N.T.S. (S-15 | S-15)

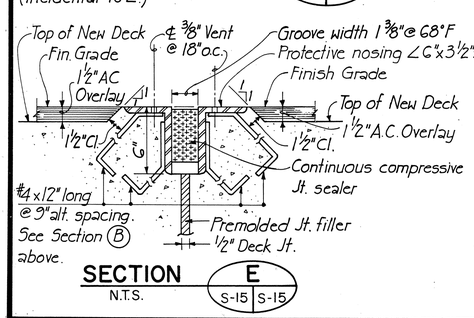

SECTION E

N.T.S. (S-15 | S-15)

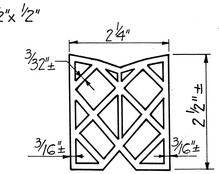

COMPRESSIVE JOINT SEALER

N.T.S.

NOTE 'X': Elastomeric Pad shall be reinforced by Steel lamination only. No fiber glass lamination is allowed.

D S-15 S-15

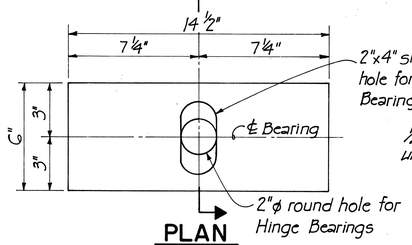

PLAN

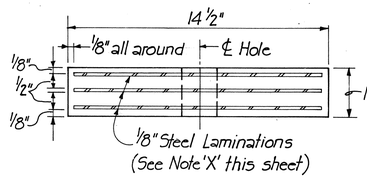

ELEVATION

ELASTOMERIC PAD DETAILS

SCALE: 3" = 1'-0"

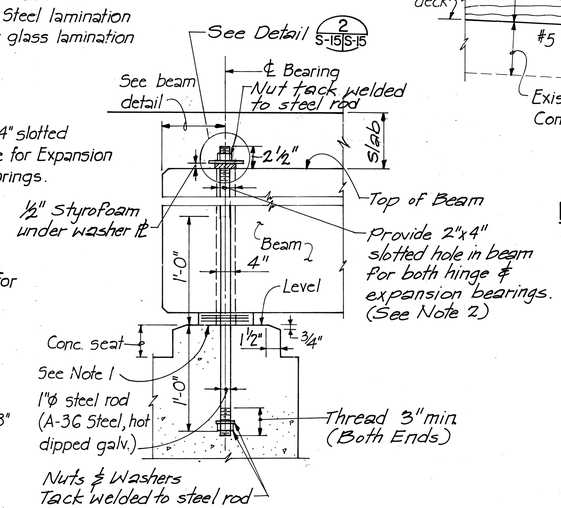

SECTION D

SCALE: 1½" = 1'-0" (S-15 | S-15)

DATE	SURVEY PLOTTED BY	DRAWN BY	TRACED BY	DESIGNED BY	QUANTITIES BY	CHECKED BY

ORIGINAL PLAN	NOTE BOOK	No.

HUI PANG CHEN
REGISTERED PROFESSIONAL ENGINEER
No. 3865-S
HAWAII, U.S.A.

THIS WORK WAS PREPARED BY ME OR UNDER MY SUPERVISION.

Hui Pang Chen

STATE OF HAWAII
DEPARTMENT OF TRANSPORTATION
HIGHWAYS DIVISION
WAILUPE STREAM BRIDGE WIDENING

MISCELLANEOUS DETAILS

SHEET 1 OF 3

KALANIANAOLE HIGHWAY
Wailupe Circle to East Hind Drive
FA. Project No. F-072-1 (34)-A

SCALE: As shown — DATE: JUNE 30, 1990

SHEET No. S-15 OF 19 SHEETS

FED. ROAD DIST. NO.	STATE	FED. AID PROJ. NO.	FISCAL YEAR	SHEET NO.	TOTAL SHEETS
HAWAII	HAW.	F-0720-1(34)-A	1990	171	186

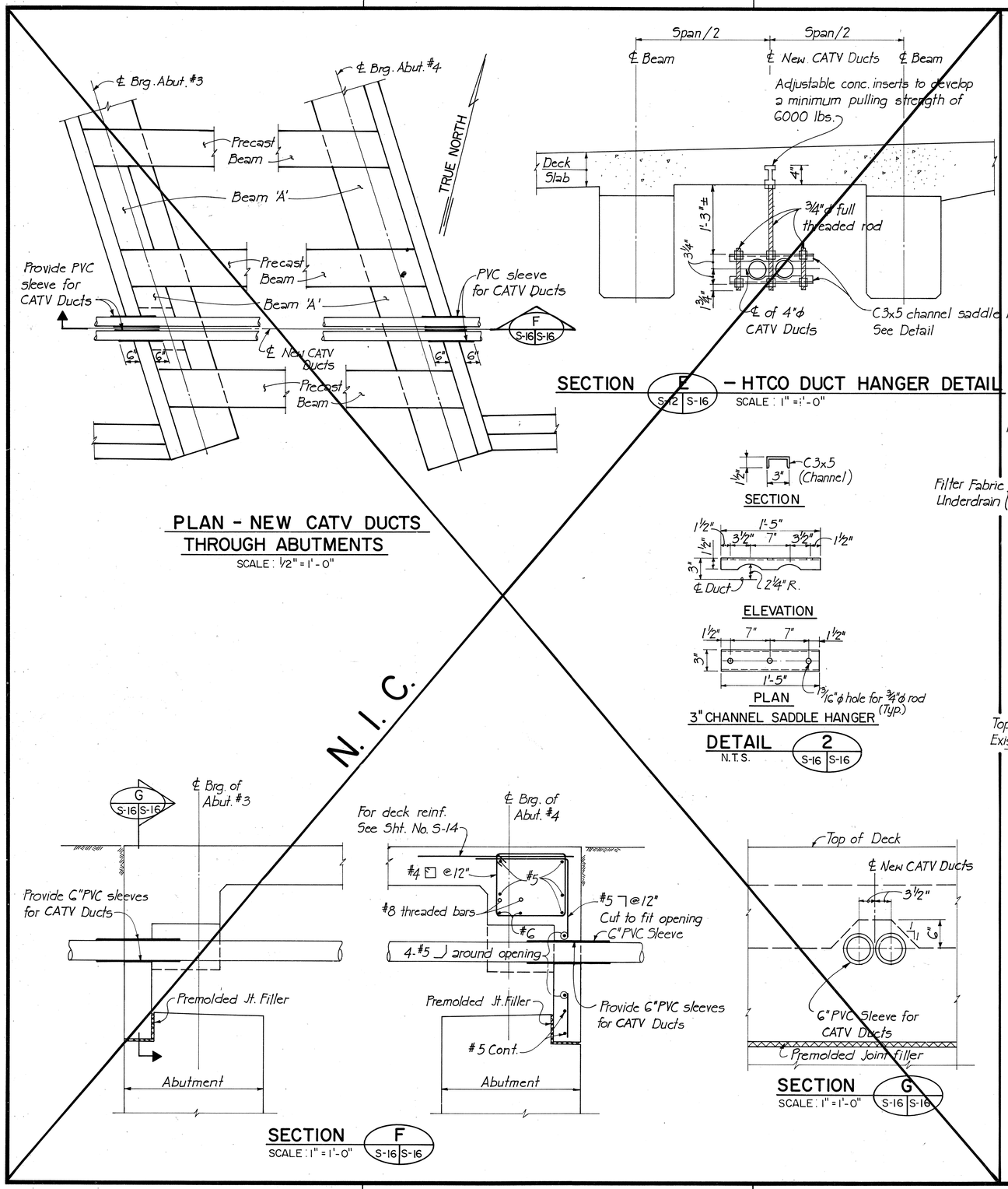

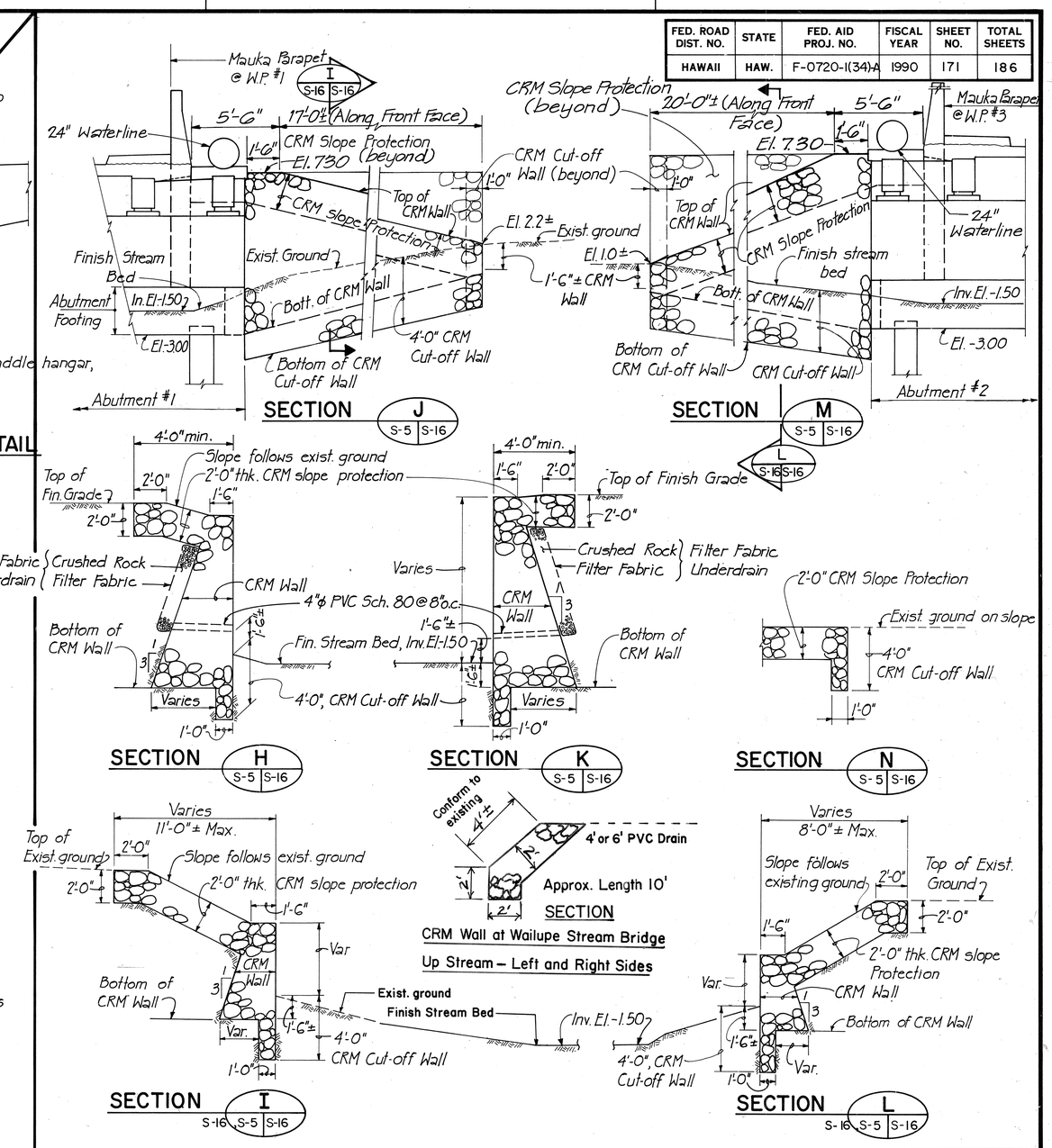

CRM SLOPE PROTECTION DETAILS

SCALE: 1/4" = 1'-0"

DATE	REVISIONS
9/10/91	Revised Sections J & M to add 24" Water Line (S-5 S-16 / S-5 S-16)

HUI PANG CHEN REGISTERED PROFESSIONAL ENGINEER No. 3865-S HAWAII, U.S.A.

THIS WORK WAS PREPARED BY ME OR UNDER MY SUPERVISION.

Hui Pang Chen

STATE OF HAWAII
DEPARTMENT OF TRANSPORTATION
HIGHWAYS DIVISION
WAILUPE STREAM BRIDGE WIDENING

MISCELLANEOUS DETAILS

SHEET 2 OF 3

KALANIANAOLE HIGHWAY

Wailupe Circle to East Hind Drive

F.A. Project No. F-072-1 (34) -A

SCALE: As shown DATE: JUNE 30, 1990

SHEET No. S-16 OF 19 SHEETS

C.O. 171

ORIGINAL PLAN | REVISED PLAN | REVISED PLAN | REVISED PLAN | REVISED PLAN | REVISED PLAN
SURVEY PLOTTED BY | DESIGNED BY | DRAWN BY | TRACED BY | SUBMITTED BY | RECOMMENDED FOR APPROVAL BY
BOOK NO. | NOTE BOOK | No. | DATE

FED. ROAD DIST. NO.	STATE	FED. AID PROJ. NO.	FISCAL YEAR	SHEET NO.	TOTAL SHEETS
HAWAII	HAW.	F-072-1(34)-A	1990	172	186

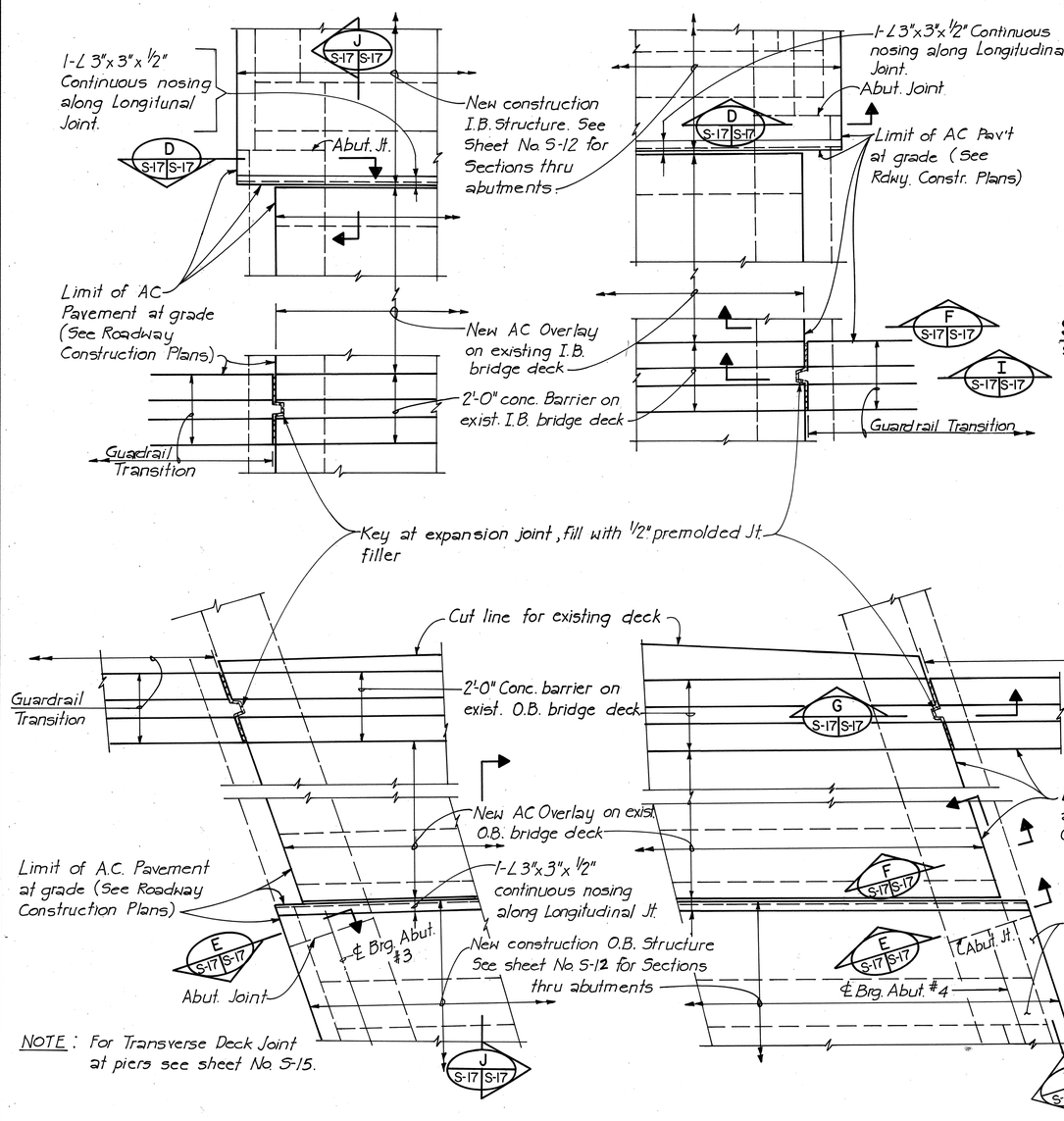

NOTE: For Transverse Deck Joint at piers see sheet No. S-15.

PARTIAL DECK JOINT PLAN

SCALE: 1/2" = 1'-0"

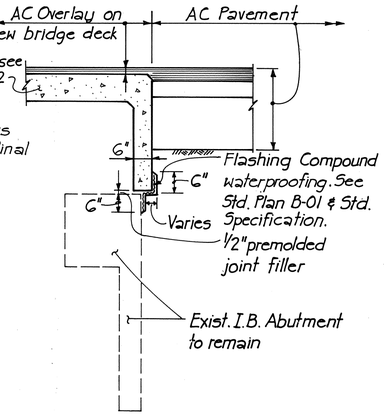

SECTION D

SCALE: 1/2" = 1'-0" (S-17 S-17)

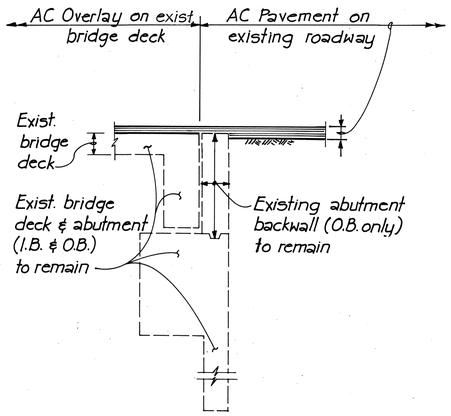

SECTION F

SCALE: 1/2" = 1'-0" (S-17 S-17)

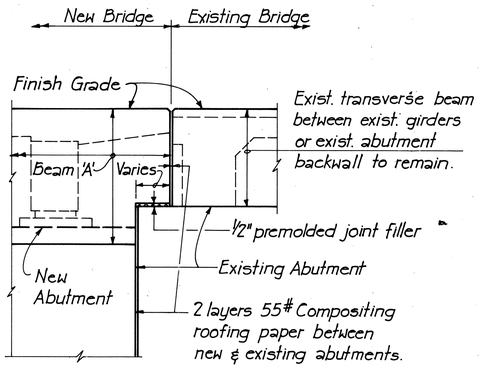

SECTION H

SCALE: 1/2" = 1'-0" (S-17 S-17) (TYPICAL SECTION THRU BEAM 'A' & EXIST. STRUCTURE)

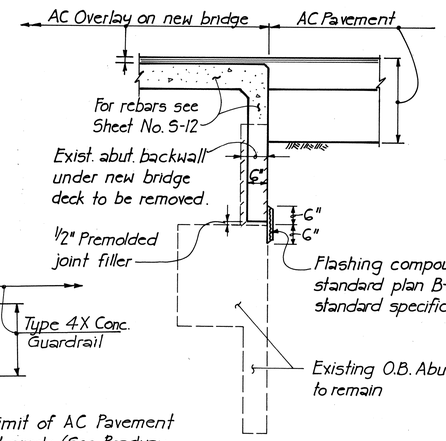

SECTION E

SCALE: 1/2" = 1'-0" (S-17 S-17)

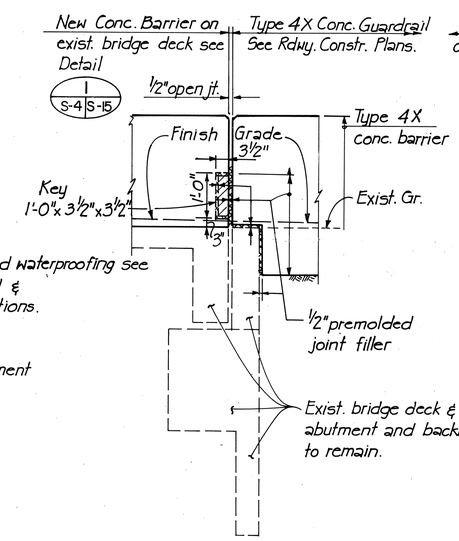

SECTION G

SCALE: 1/2" = 1'-0" (S-17 S-17)

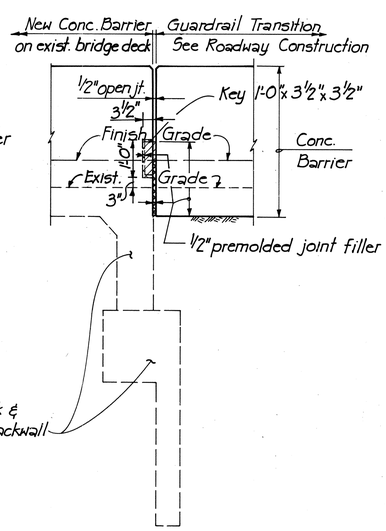

SECTION I

SCALE: 1/2" = 1'-0" (S-17 S-17)

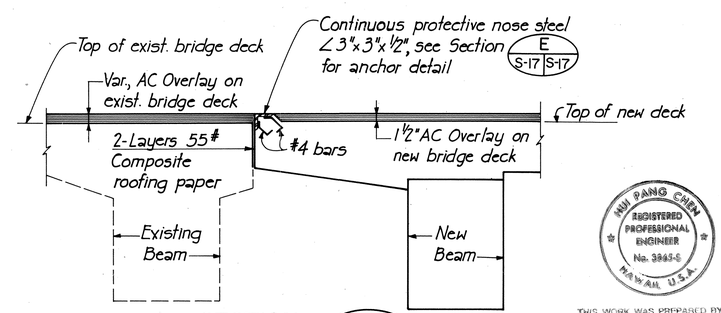

SECTION J

SCALE: 1" = 1'-0" (S-17 S-17)

HSU PANG CHEN REGISTERED PROFESSIONAL ENGINEER No. 3945-S HAWAII, U.S.A.

THIS WORK WAS PREPARED BY ME OR UNDER MY SUPERVISION.

Hsu Pang Chen

STATE OF HAWAII
DEPARTMENT OF TRANSPORTATION
HIGHWAYS DIVISION
WAILUPE STREAM BRIDGE WIDENING

MISCELLANEOUS DETAILS

SHEET 3 OF 3

KALANIANAOLE HIGHWAY

Wailupe Circle to East Hind Drive

F.A. Project No. F-072-1 (34) - A

SCALE: As shown DATE: JUNE 30, 1990

SHEET No. S-17 OF 19 SHEETS

ORIGINAL PLAN | NOTE BOOK No. | SURVEY PLOTTED BY | DRAWN BY | TRACED BY | DESIGNED BY | QUANTITIES BY | CHECKED BY | DATE

FED. ROAD DIST. NO.	STATE	FED. AID PROJ. NO.	FISCAL YEAR	SHEET NO.	TOTAL SHEETS
HAWAII	HAW.	F-072-1 (34)-A	1990	173	186

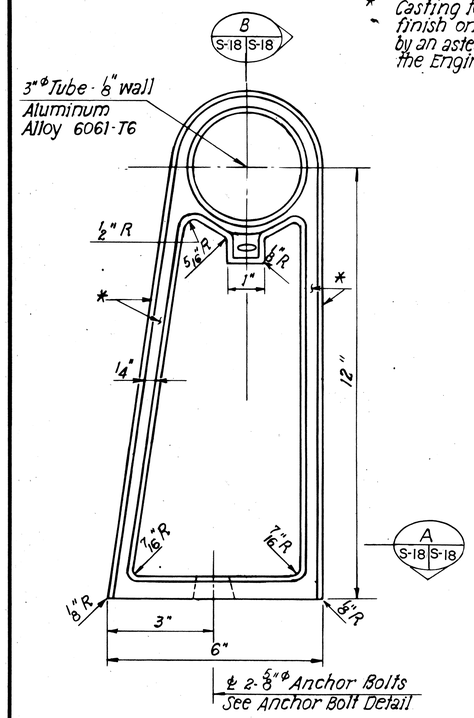

SIDE ELEVATION
6" = 1'-0"

* Casting to be supplied with a scratch brush finish on entire gating rib surface as indicated by an asterisk (*). Finish shall be approved by the Engineer.

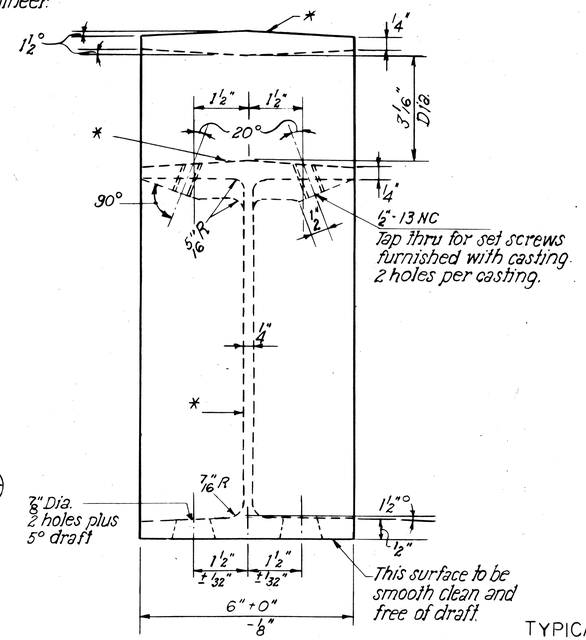

END ELEVATION
6" = 1'-0"

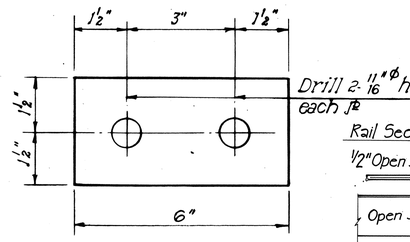

PLAN

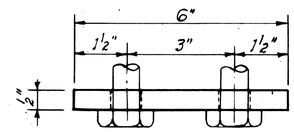

ELEVATION

TYPICAL ANCHOR PLATE DETAILS (A36 STEEL)
Scale: 6" = 1'-0"

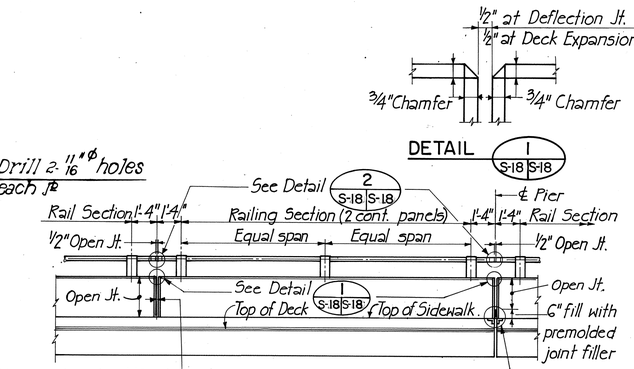

SIDEWALK PARAPET AND RAILING ELEVATION
N.T.S.

NOTES:

1. For cast post and rail see specifications.
2. Unless otherwise specified:
   Draft angle = 3° Casting tolerance = ± 1/16"
   Corner radii = 1/8" R Wall thickness = ± 1/32"
   Fillet radii = 3/8" R
3. Cast post shall be of Aluminum Alloy A344-T4.
4. Elastomeric or fabric pad between concrete parapet ℄ bottom of each post shall be incidental to 'Metal Bridge Railing'.
5. Material shown on DETAIL 2 S-18 S-18 shall be incidental to the Metal Bridge Railing.

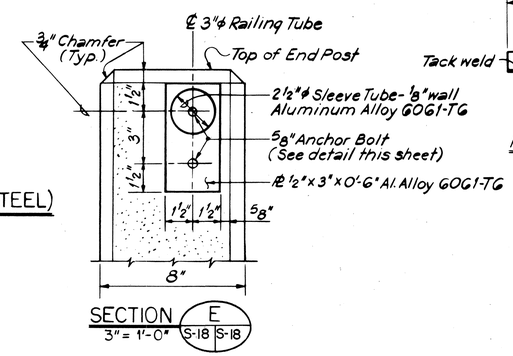

SECTION E S-18 S-18
3" = 1'-0"

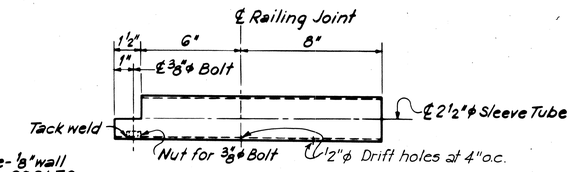

SLEEVE TUBE DETAIL AT INTERMEDIATE JOINTS
3" = 1'-0"

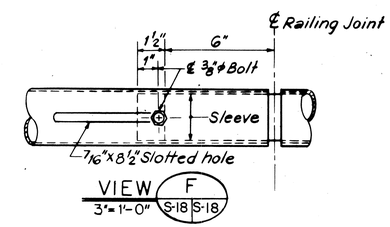

VIEW F S-18 S-18
3" = 1'-0"

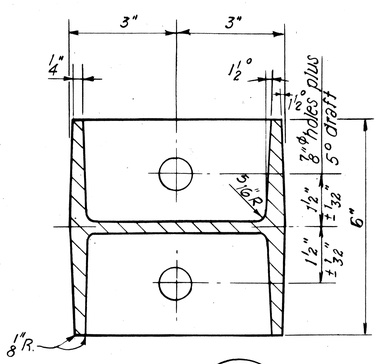

SECTION A S-18 S-18
6" = 1'-0"

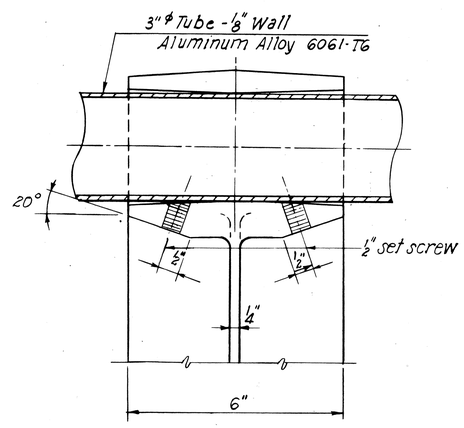

SECTION B S-18 S-18
6" = 1'-0"

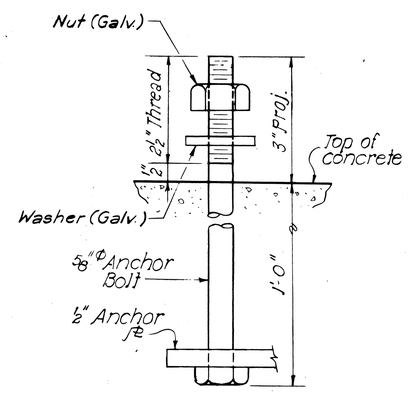

ANCHOR BOLT (Galv. Steel ASTM A325)
(Incidental to Railing)
6" = 1'-0"

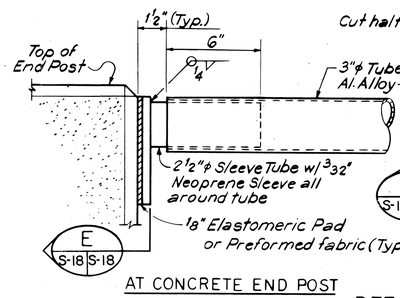

AT CONCRETE END POST

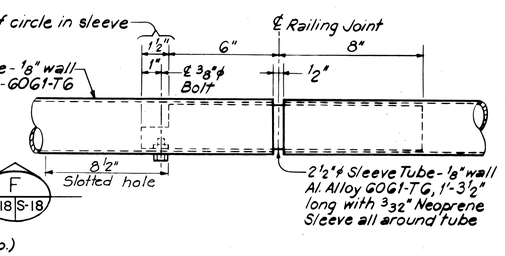

AT INTERMEDIATE JOINTS

DETAIL 2 S-18 S-18
3" = 1'-0"

HUI PANG CHEN
REGISTERED PROFESSIONAL ENGINEER
No. 3865-S
HAWAII, U.S.A.

THIS WORK WAS PREPARED BY ME OR UNDER MY SUPERVISION.
Hui pang Chen

STATE OF HAWAII
DEPARTMENT OF TRANSPORTATION
HIGHWAYS DIVISION

WAILUPE STREAM BRIDGE WIDENING

METAL RAILING DETAILS

KALANIANAOLE HIGHWAY
Wailupe Circle to East Hind Drive
FA. Project No. F-072-1 (34)-A

SCALE: As shown DATE: JUNE 30, 1990

SHEET NO. S-18 OF 19 SHEETS

ORIGINAL PLAN	SURVEY PLOTTED BY	DATE
	DRAWN BY S. SHERMAN	
	TRACED BY	
NOTE BOOK	DESIGNED BY	
	QUANTITIES BY	
NO.	CHECKED BY	

FED. ROAD DIST. NO.	STATE	FED. AID PROJ. NO.	FISCAL YEAR	SHEET NO.	TOTAL SHEETS
HAWAII	HAW.	F-072-1(34)-A	1990	173S-1	186

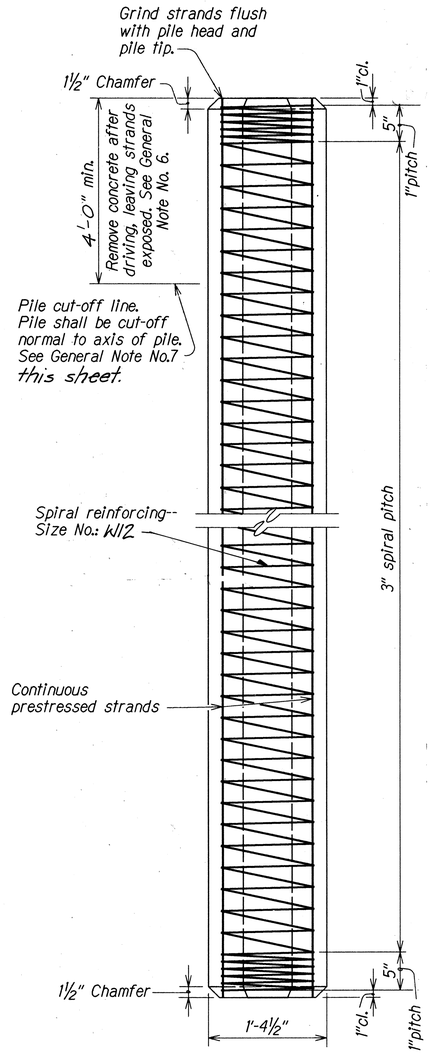

ELEVATION

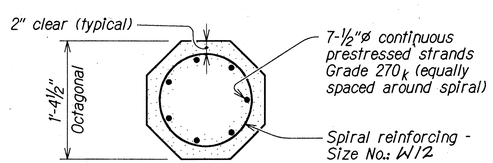

SECTION

TYPICAL PILE DETAILS

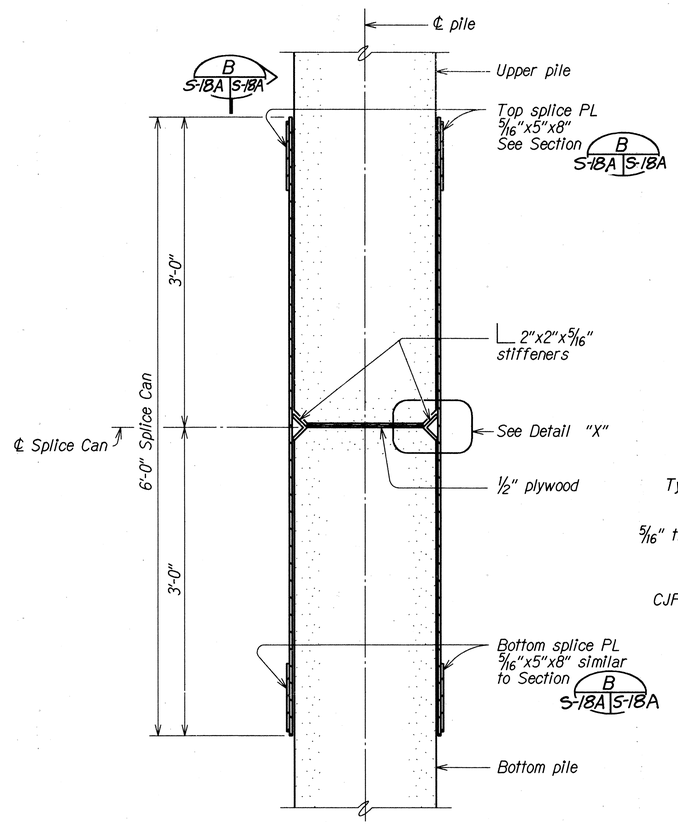

SECTION A S-18A S-18A

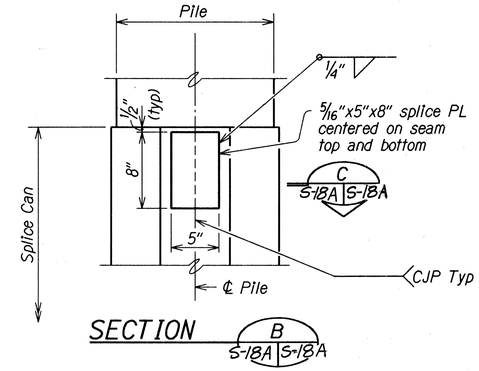

SECTION B S-18A S-18A

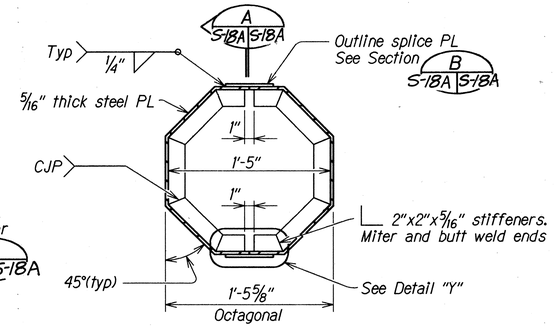

SECTION C S-18A S-18A

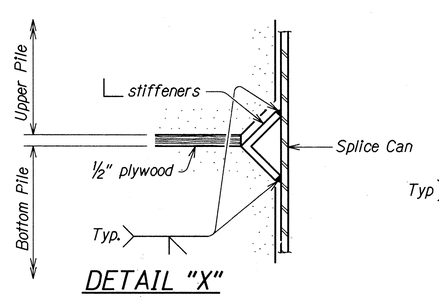

DETAIL "X"

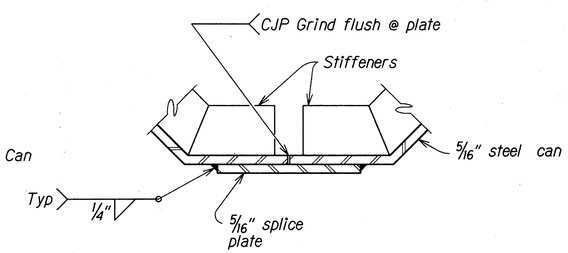

DETAIL "Y"

TYPICAL PILE SPLICE DETAILS

NOTES:

1. Test piles indicate bearing to be at -80.00 feet instead of -30.00 feet MSL (See sheet no.160)
2. Revised pile tip elevation and pile length was increased to meet required pile bearing capacity.

GENERAL NOTES FOR PILE

1. Concrete strengths (28-day compressive strength):
   a. Standard pile: f'_c =6000 psi
   b. Pile build-up with driving: f'_c =6000 psi
   c. Pile build-up without driving: f'_c identical with footing or pile cap concrete.
2. Reinforcing steel shall conform to the following ASTM specifications:
   a. Bar reinforcement: ASTM A615, Grade 60
   b. Spiral reinforcement: ASTM A82.
   c. Prestressing strand: ASTM A416 Grade 270.
3. Splice Can:
   a. Structural steel shall conform to ASTM A36.
   b. All welding shall meet the requirements of Section 501 of the Standard Specification.
   c. No measurement for payment will be made for the splice can as it shall be considered incidental to the driving of the pile.
   d. CJP = Complete Joint Penetration groove weld.
4. The minimum working force in the prestressing steel shall be 165 kips (after all losses).
5. Piles accepted by the Engineer shall be of sound concrete. Damaged piles shall be replaced or repaired as directed by the Engineer, at the Contractor's expense.
6. Work of cutting off prestress concrete piles or concrete pile build-ups shall be performed in such a manner as to avoid spalling or damaging of the pile below cut-off. Damaged portions shall be removed and pile cut-off elevation lowered as directed by the Engineer.
7. Top of pile at cut-off line shall be prepared as required for construction joints in Section 503 of the Standard Specifications.
8. Pile splice will not be permitted, except for pile length in excess of 100 feet, unless otherwise approved by the Engineer.
9. The in-place length of pile above the splice shall be approximately 50 percent of the total length of pile driven, unless location of splice is indicated in the plans or specifications.
10. Build-ups may be driven after the concrete attains a compressive strength of 4000 psi., but not earlier than 7 days after the concrete is poured.

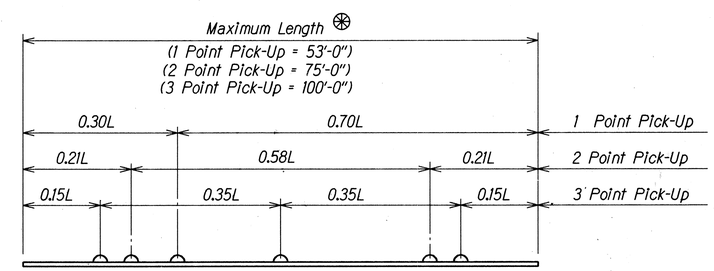

⊛ The length "L" is the distance end to end of pile.

PILE PICK-UP POINTS

HUI PANG CHEN REGISTERED PROFESSIONAL ENGINEER No. 3865-S HAWAII, U.S.A.

THIS WORK WAS PREPARED BY ME OR UNDER MY SUPERVISION.
Huipang Chen

DATE	REVISION

STATE OF HAWAII
DEPARTMENT OF TRANSPORTATION
HIGHWAYS DIVISION
WAILUPE STREAM BRIDGE WIDENING

PRESTRESSED CONCRETE PILES

SHEET 1 OF 2

KALANIANAOLE HIGHWAY
Wailupe Circle to East Hind Drive
FA. Project No. F-072-1(34)-A

SCALE: As shown DATE: JUNE 30, 1990

SHEET No. S-18A OF 19 SHEETS

ORIGINAL PLAN | SURVEY PLOTTED BY | DRAWN BY | TRACED BY | DESIGN FILE | DESIGNED BY | QUANTITIES BY | CHECKED BY | DATE | No.

173S-1

FED. ROAD DIST. NO.	STATE	FED. AID PROJ. NO.	FISCAL YEAR	SHEET NO.	TOTAL SHEETS
HAWAII	HAW.	F-072-1(34)-A	1990	173S-2	186

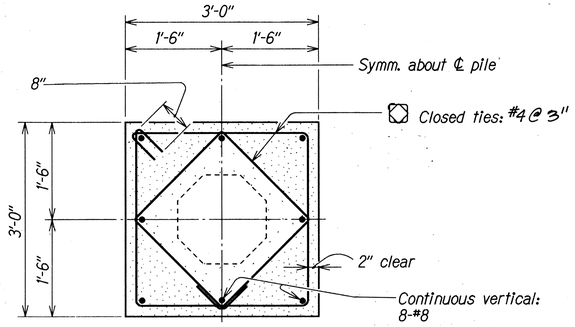

SQUARE BUILD-UP

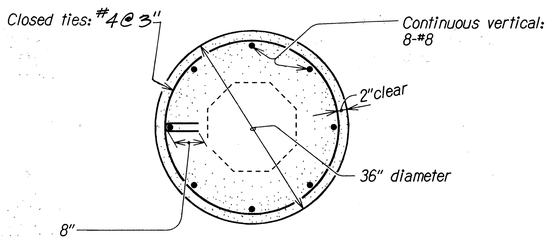

CIRCULAR BUILD-UP

SECTION A S-18B S-18B

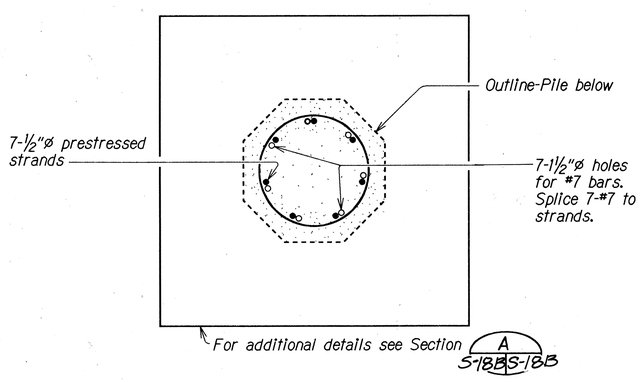

SECTION B S-18B S-18B

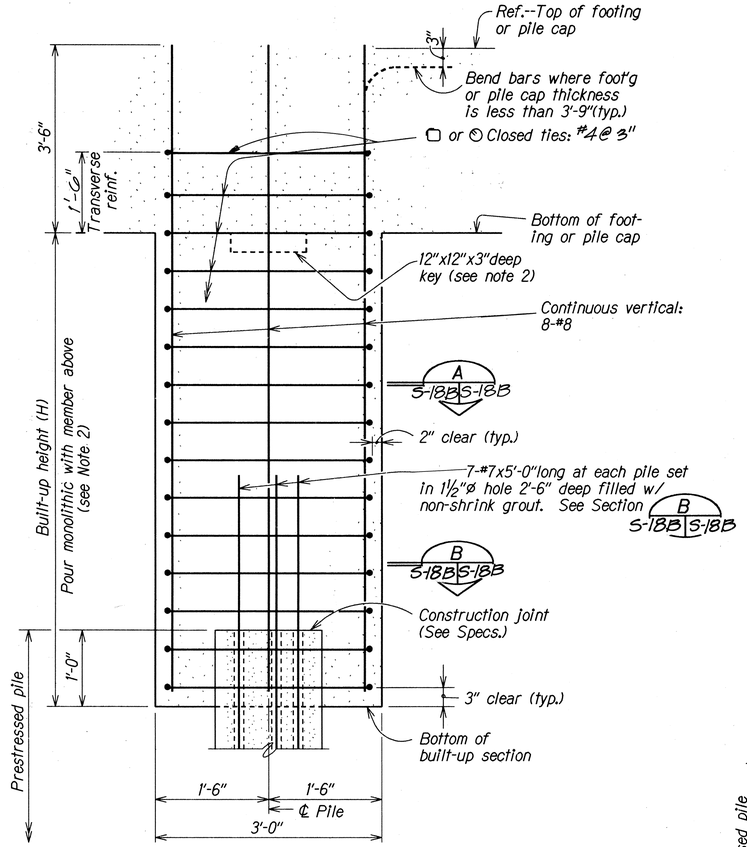

ALTERNATE PILE BUILD-UP DETAIL

NOTES:

1. Selection of pile build-up type without driving to be determined by the Engineer.
2. When the built-up height (H) exceeds 4'-0", the built-up section shall be poured separately from the main body of the footing or pile cap.
3. Pile build-ups may be omitted for pile heads embedded at least 4" into footing, provided at least 90 percent of the pile in each footing have the minimum embedment into footing as shown in contract plans and #7 bars are spliced to strands as shown in Section B S-18B S-18B.
4. For built-up pile with driving, remove concrete after driving, leaving reinforcement exposed. See General Note 6 on Sht. No. S-18A.
5. Circular built-up section may be used only when approved by the Engineer.
6. Alternate pile build-up detail shall apply only to pile build-up without driving.

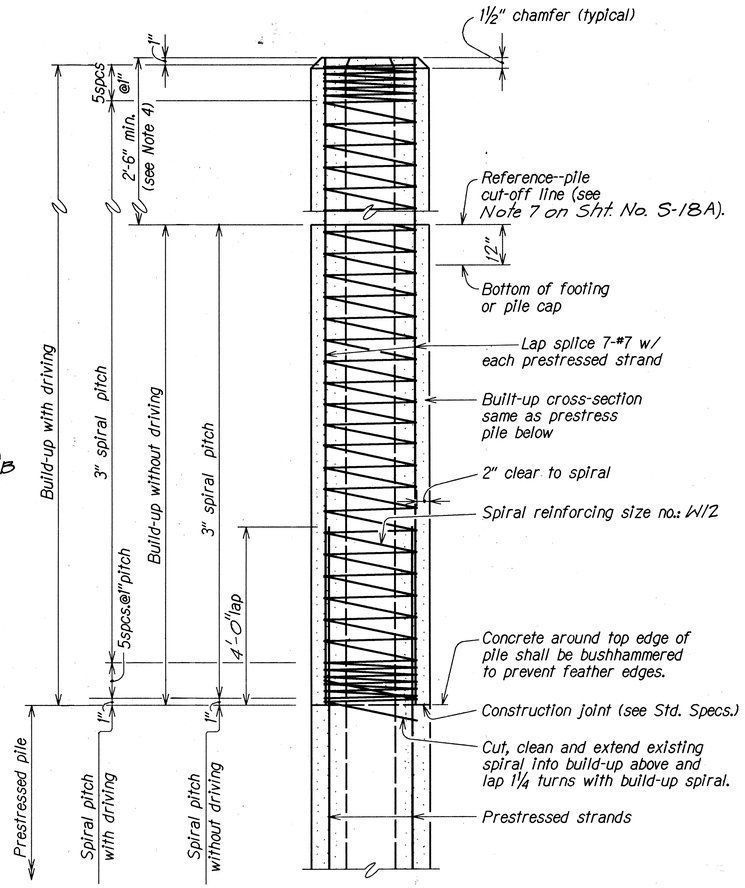

TYPICAL PILE BUILD-UP DETAIL

ORIGINAL PLAN		DATE
SURVEY PLOTTED BY		
DRAWN BY		
TRACED BY		
DESIGNED BY		
DESIGN FILE	QUANTITIES BY	
	CHECKED BY	
No.		

MUI PANG CHEN REGISTERED PROFESSIONAL ENGINEER No. 3865-S HAWAII, U.S.A.

THIS WORK WAS PREPARED BY ME OR UNDER MY SUPERVISION.

Mui Pang Chen

DATE	REVISION

STATE OF HAWAII
DEPARTMENT OF TRANSPORTATION
HIGHWAYS DIVISION
WAILUPE STREAM BRIDGE WIDENING

PRESTRESSED CONCRETE PILES

SHEET 2 OF 2

KALANIANAOLE HIGHWAY
Wailupe Circle to East Hind Drive
F.A. Project No. F-072-1(34)-A

SCALE: As shown DATE: JUNE 30, 1990

SHEET No. S-18B OF 19 SHEETS

173S-2

FED. ROAD DIST. NO.	STATE	FED. AID PROJ. NO.	FISCAL YEAR	SHEET NO.	TOTAL SHEETS
HAWAII	HAW.	F-072-1(34)-A	1990	174	186

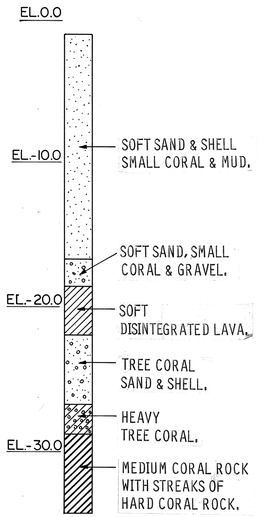

HOLE NO. 1

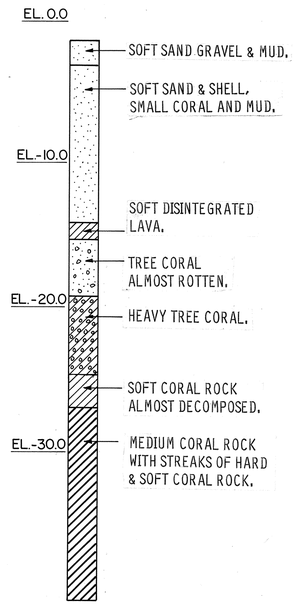

HOLE NO. 2

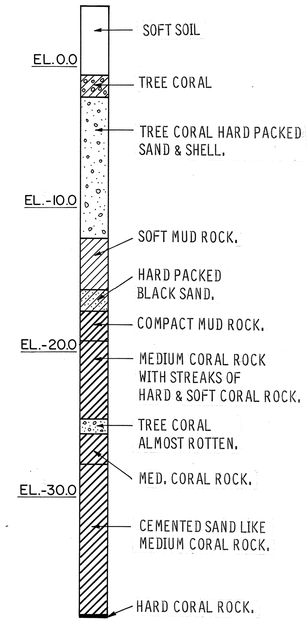

HOLE NO. 3

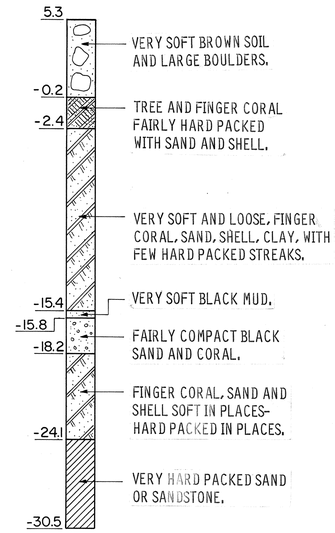

B-1

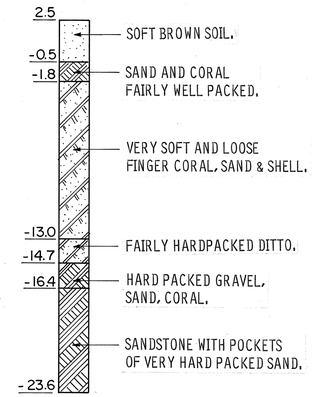

B-2

NOTES:

1. THE BORING DATA SHOWN ARE COPIED FROM THE FOLLOWING EXISTING BRIDGE PLANS:
   (A) HOLE NO. 1 THRU NO. 3:
   KALANIANAOLE HWY. FAP NO. 6B
   DRAWING NO. 4141.4 (DATED APR., 1930)
   (B) B-1 THRU B-6:
   KALANIANAOLE HWY. FAP NO. F6 (18)
   DRAWING NO. 5686.39 (DATED MAR., 1954)

2. FOR BORE HOLE LOCATIONS SEE SHEET NO. S-5.

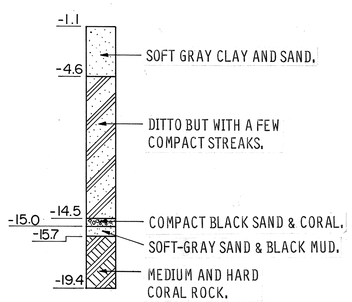

B-3

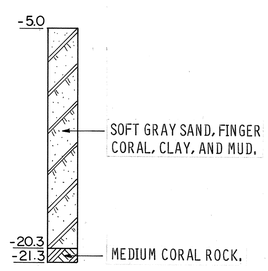

B-4

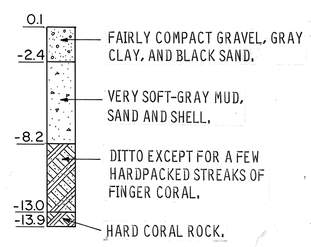

B-5

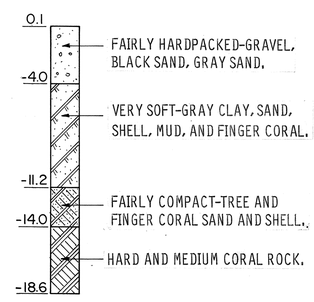

B-6

EXISTING BORING DATA

SCALE: 1" = 5'-0"

ORIGINAL PLAN	SURVEY PLOTTED BY	DATE
NOTE BOOK	DRAWN BY	
	TRACED BY	
	DESIGNED BY	
	QUANTITIES BY	
No.	CHECKED BY	

HSU FANG CHEN
REGISTERED PROFESSIONAL ENGINEER
No. 3865-S
HAWAII, U.S.A.

THIS WORK WAS PREPARED BY ME OR UNDER MY SUPERVISION.

Hsu Fang Chen

STATE OF HAWAII
DEPARTMENT OF TRANSPORTATION
HIGHWAYS DIVISION

WAILUPE STREAM BRIDGE WIDENING

BORING LOGS

KALANIANAOLE HIGHWAY
Wailupe Circle to East Hind Drive
F.A. Project No. F-072-1(34)-A

SCALE: As shown DATE: JUNE 30, 1990

SHEET No. S-19 OF 19 SHEETS