FED. ROAD DIST. NO.	STATE	PROJ. NO.	FISCAL YEAR	SHEET NO.	TOTAL SHEETS
HAWAII	HAW.	72C-01-13	2017	11	21

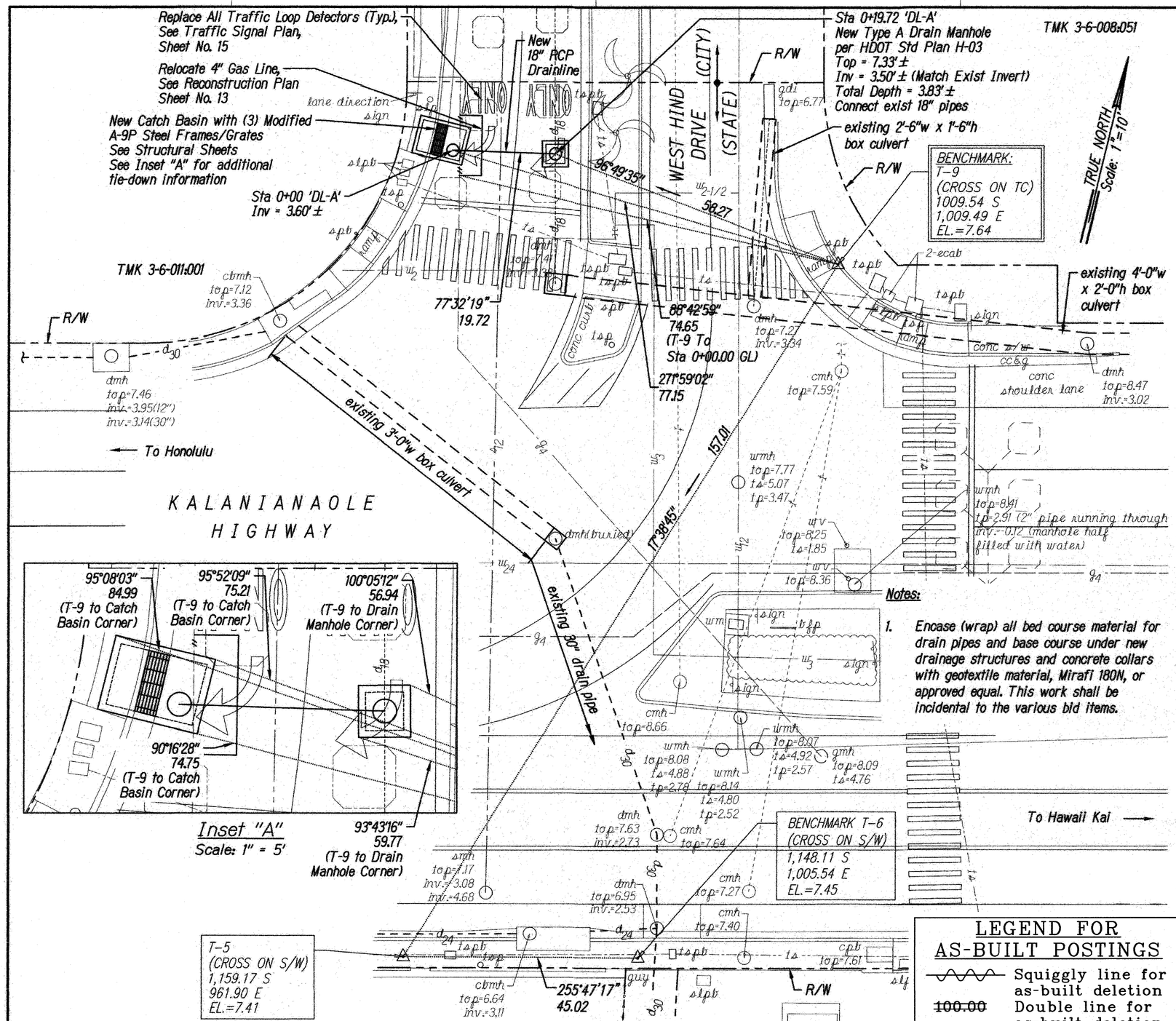

Inset "A"
Scale: 1" = 5'

Drain Line 'DL-A' Plan
Scale: 1" = 10'

Notes:

1. Encase (wrap) all bed course material for drain pipes and base course under new drainage structures and concrete collars with geotextile material, Mirafi 180N, or approved equal. This work shall be incidental to the various bid items.

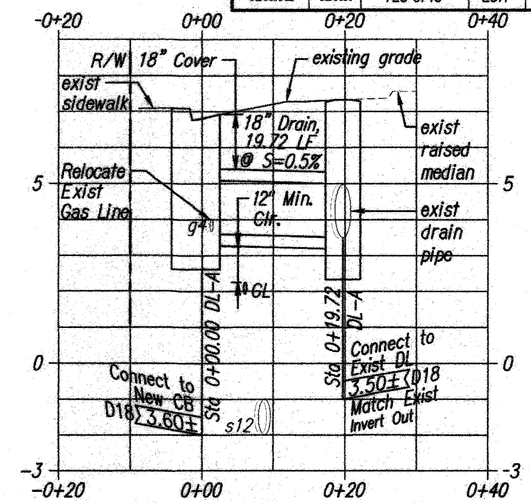

Drain Line 'DL-A' Profile
Horizontal Scale: 1" = 10'
Vertical Scale: 1" = 2'

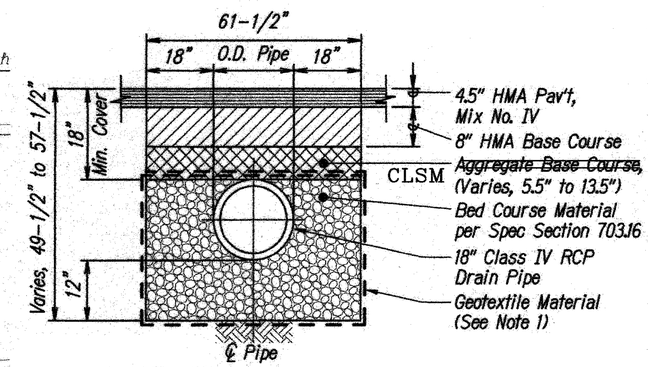

Typical Drain Trench Detail
Not to Scale

Manager and Chief Engineer, Hawaii Gas (for work affecting Hawaii Gas facilities in State R/W)

11/21/16
Date

LEGEND FOR AS-BUILT POSTINGS

∿∿∿	Squiggly line for as-built deletion
~~100.00~~	Double line for as-built deletion
Roadway	Text for as-built posting

MINGKUN DING LICENSED PROFESSIONAL ENGINEER NO. 9248-C HAWAII, U.S.A.

LICENSE EXPIRES 4/30/18

THIS WORK WAS PREPARED BY ME OR UNDER MY SUPERVISION

STATE OF HAWAII
DEPARTMENT OF TRANSPORTATION
HIGHWAYS DIVISION

DRAINAGE PLAN AND PROFILE

KALANIANAOLE HIGHWAY
DRAINAGE IMPROVEMENTS
Vicinity of Wailupe Place
Project No. 72C-01-13

Scale: As Shown Date: November 2016

SHEET No. 1 OF 2 SHEETS

ORIGINAL PLAN	SURVEY PLOTTED BY	DATE
	DRAWN BY	
	TRACED BY	
NOTE BOOK	DESIGNED BY	
No.	QUANTITIES BY	
	CHECKED BY	

"AS-BUILT"

FED. ROAD DIST. NO.	STATE	PROJ. NO.	FISCAL YEAR	SHEET NO.	TOTAL SHEETS
HAWAII	HAW.	72C-01-13	2017	12	21

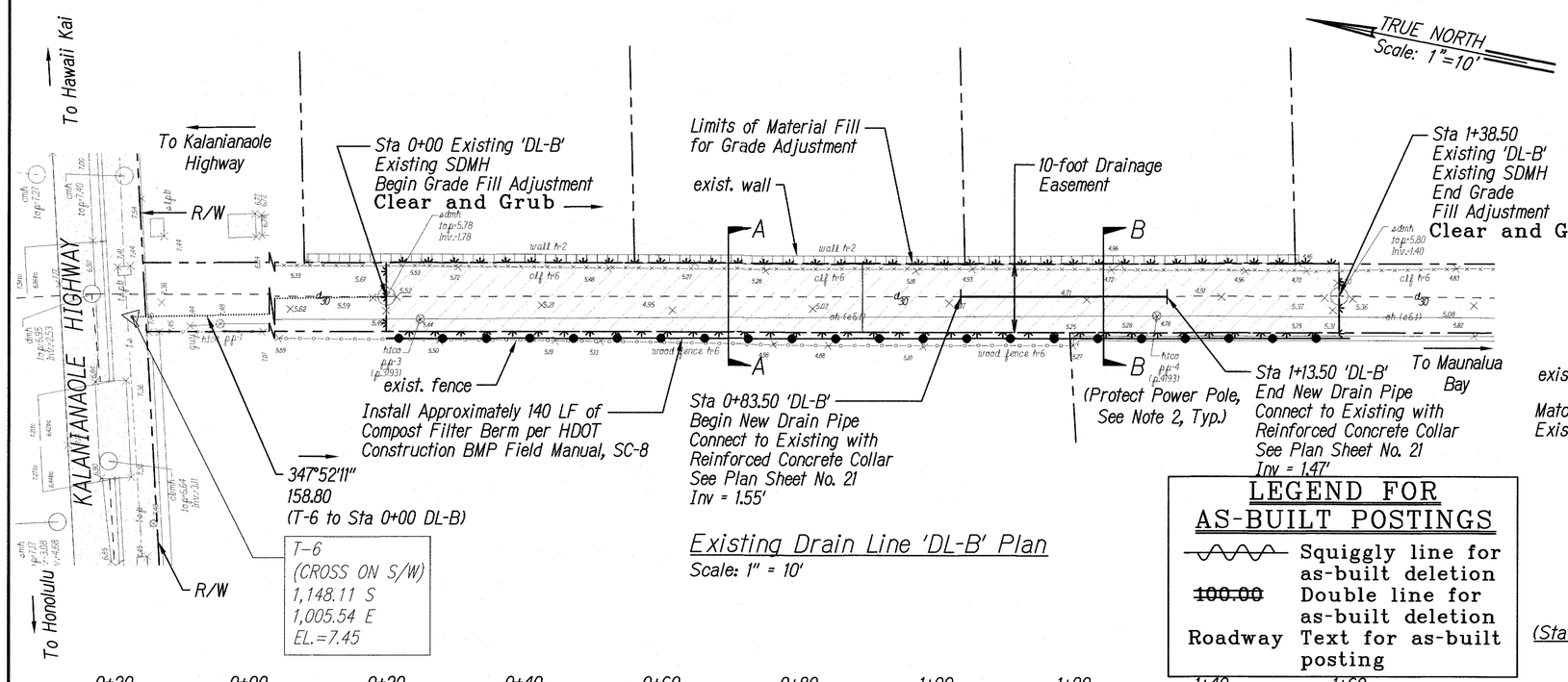

Existing Drain Line 'DL-B' Plan
Scale: 1" = 10'

LEGEND FOR AS-BUILT POSTINGS

~~	Squiggly line for as-built deletion
~~100.00~~	Double line for as-built deletion
Roadway	Text for as-built posting

Notes:

1. Work for the drain utility replacement, indicated as drain line "DL-B" on this sheet, shall only be performed when there is no forecast of rain and when the tide level is one-foot or less.
2. See HECO notes, Sheets 6 & 7 regarding work within 10-ft of HECO poles. Protection of HECO facilities shall be incidental to the various bid items.
3. Encase (wrap) all bed course material for drain pipes and base course under new drainage structures and concrete collars with geotextile material, Mirafi 180N, or approved equal. This work shall be incidental to the various bid items.
4. Payment for ~~Aggregate Base Course~~ shall be incidental to Item No. ~~304.0100.~~ top soil with Bermuda grass 641.0100 seeds and mulch and fertilize

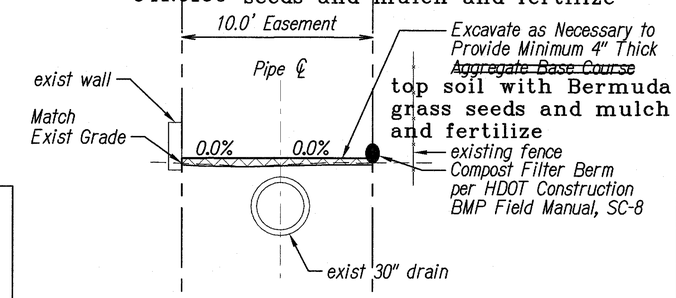

Typical Section A-A
(Sta 0+00 to Sta 0+83.50 and Sta 1+13.50 to Sta 1+38.50)
Not To Scale

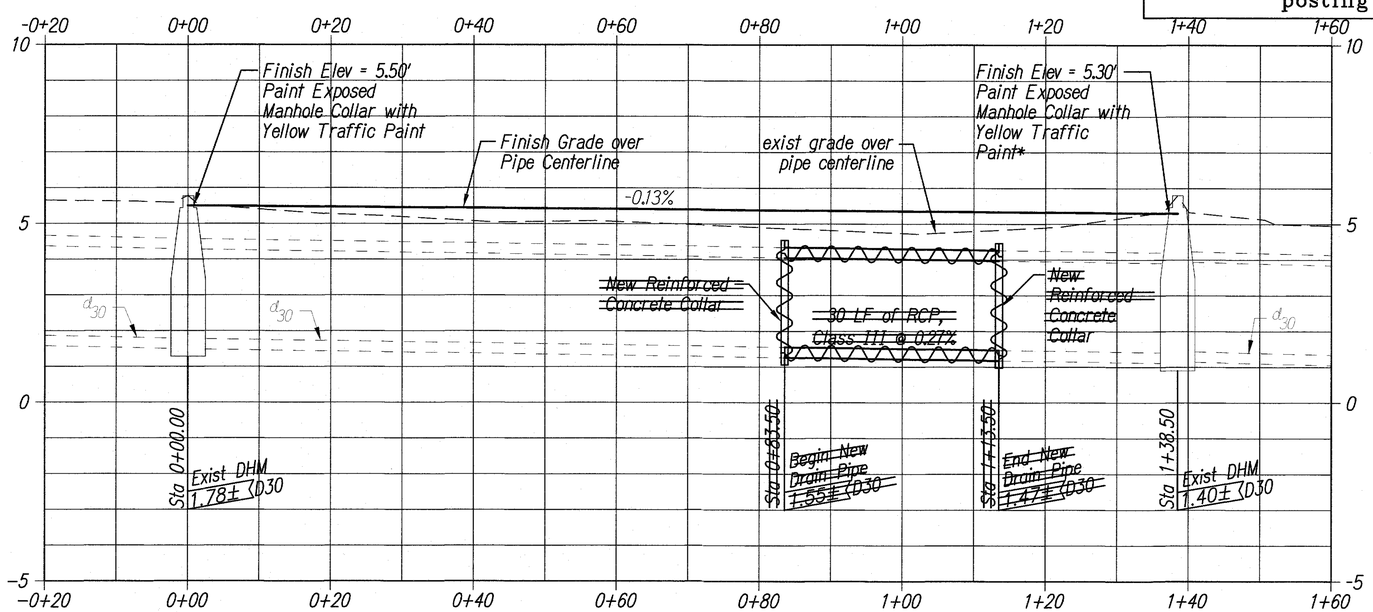

* Note:
Yellow traffic paint shall be considered incidental to contract price of various bid items.

Existing Drain Line 'DL-B' Profile
Horizontal Scale: 1" = 10'
Vertical Scale: 1" = 2'

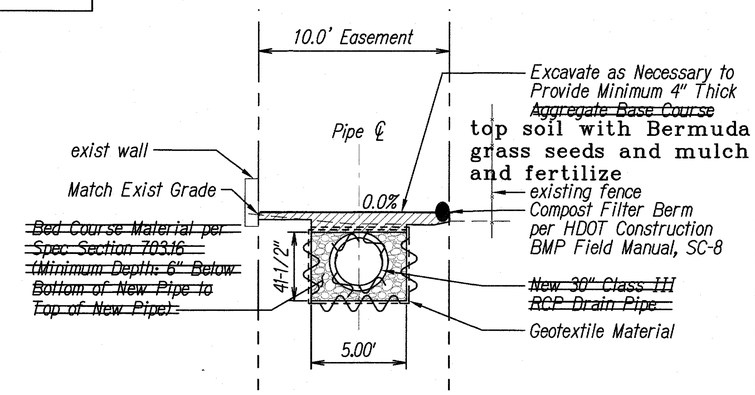

Typical Section B-B
(Sta 0+83.50 to Sta 1+13.50)
Not To Scale

ORIGINAL PLAN	SURVEY PLOTTED BY	DATE
	DRAWN BY	
NOTE BOOK	TRACED BY	
	DESIGNED BY	
	QUANTITIES BY	
No.	CHECKED BY	

MINGXUN DING
LICENSED PROFESSIONAL ENGINEER
NO. 9246-C
HAWAII, U.S.A.

LICENSE EXPIRES 4/30/18

THIS WORK WAS PREPARED BY ME OR UNDER MY SUPERVISION

STATE OF HAWAII
DEPARTMENT OF TRANSPORTATION
HIGHWAYS DIVISION

DRAINAGE PLAN AND PROFILE

KALANIANAOLE HIGHWAY
DRAINAGE IMPROVEMENTS
Vicinity of Wailupe Place
Project No. 72C-01-13

Scale: As Shown Date: November 2016

SHEET No. 2 OF 2 SHEETS

"AS-BUILT"