FED. ROAD DIST. NO.	STATE	PROJ. NO.	FISCAL YEAR	SHEET NO.	TOTAL SHEETS
HAWAII	HAW.	65B-01-01M	2001	11	58

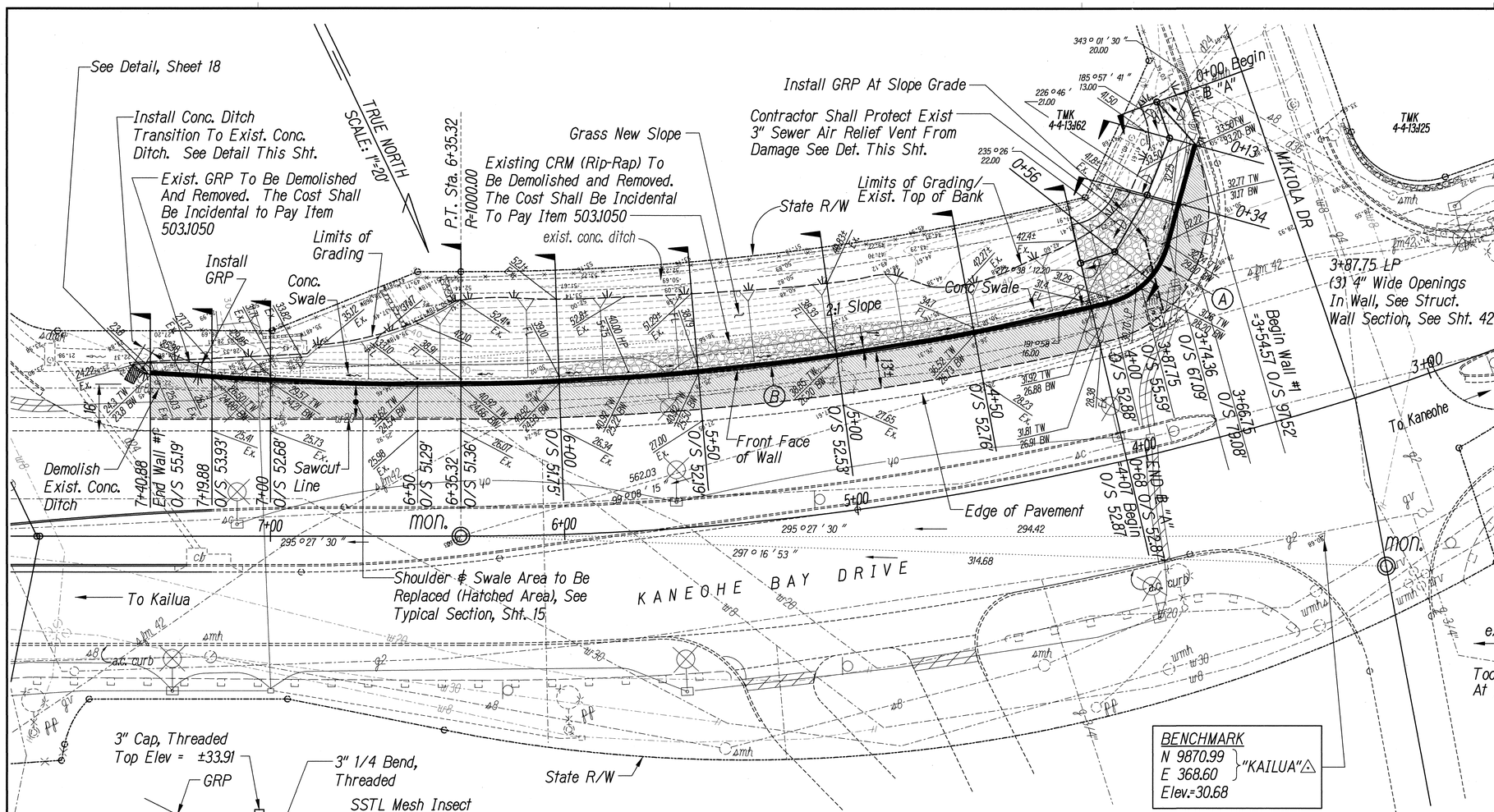

EARTHWORK SUMMARY

EXCAVATION:	897 C.Y.
EMBANKMENT:	
(1) Low Expansive Impermeable Soil	835.0 C.Y.
(2) Select Granular Fill	212.0 C.Y.
(3) 3B Fine Gravel	439.0 C.Y.
Area to be Graded	0.22 Acres

CONTRACTOR TO VERIFY:

1. Min. 2' Horiz. Clearance Between Retaining Wall Footing and Outside of 42" SFM (Sta. 4+00± 1.5' Clearance Provided).
2. Min. 3' Horiz. Clearance Between Retaining Wall Footing and Outside of Concrete Block at 42" SFM Deflection Point Sta. 6+13±.

NOTES:

1. For Retaining Wall Sections & Profiles, See Structural Drawings.
2. For Typical Civil Retaining Wall Section, See Sheet 15.
3. For Retaining Wall Cross Sections, See Sheet 13.

BENCHMARK
N 9870.99
E 368.60
Elev.=30.68
"KAILUA"

PLAN - SLOPE STABILIZATION #1
(3+54.57 TO 7+40.88)
SCALE: 1"=20'

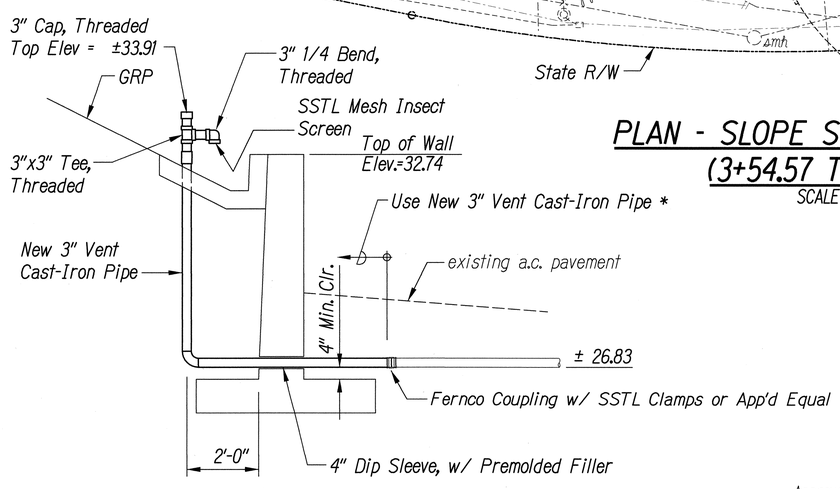

* The Cost for Replacement of 3" Vent Cast-Iron Pipe and Appurtenances Shall be Incidental to Pay Item 206.5000.

AIR RELIEF VENT DETAIL
Not to Scale

CURVE DATA

	(A)	(B)
Δ	= 61°10'10"	= 17°42'31"
Δ/2	= 30°35'05"	= 8°51'15.5"
R	= 28.00'	= ~~992.75'~~ 994.00'
T	= 16.55'	= 158.76'
C	= 28.49'	= ~~305.81'~~ 305.99'
Lc	= 29.89'	= ~~306.83'~~ 307.21'

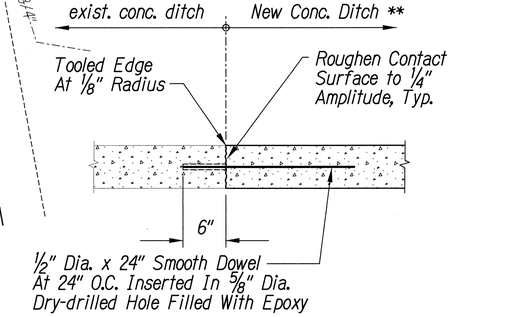

** The Cost for Demolition of Exist. Conc. Ditch and Installation of Conc. Ditch Transition Shall be Incidental to Pay Item 206.5000.

CONC. DITCH TRANSITION DETAIL
Not to Scale

Approved:

J. Wayne Galamura 5/15/01
Chief, Wastewater Branch, DPP Date

ALAN Y. TOMITA LICENSED PROFESSIONAL ENGINEER NO. 4129-C HAWAII, U.S.A.

THIS WORK WAS PREPARED BY ME OR UNDER MY SUPERVISION.

Alan Y. Tomita

STATE OF HAWAII
DEPARTMENT OF TRANSPORTATION
HIGHWAYS DIVISION

RETAINING WALL PLAN

MOKAPU SADDLE ROAD SLOPE STABILITY
Vicinity of Mikiola Dr. to Kahinani Place
Project No. 65B-01-01M
Scale: 1"=20' Date: May, 2001

SHEET No. 1 OF 8 SHEETS

ORIGINAL PLAN | SURVEY PLOTTED BY | DRAWN BY | TRACED BY | DESIGNED BY | QUANTITIES BY | CHECKED BY | DATE | NOTE BOOK No.

FED. ROAD DIST. NO.	STATE	PROJ. NO.	FISCAL YEAR	SHEET NO.	TOTAL SHEETS
HAWAII	HAW.	65B-01-01M	2001	12	58

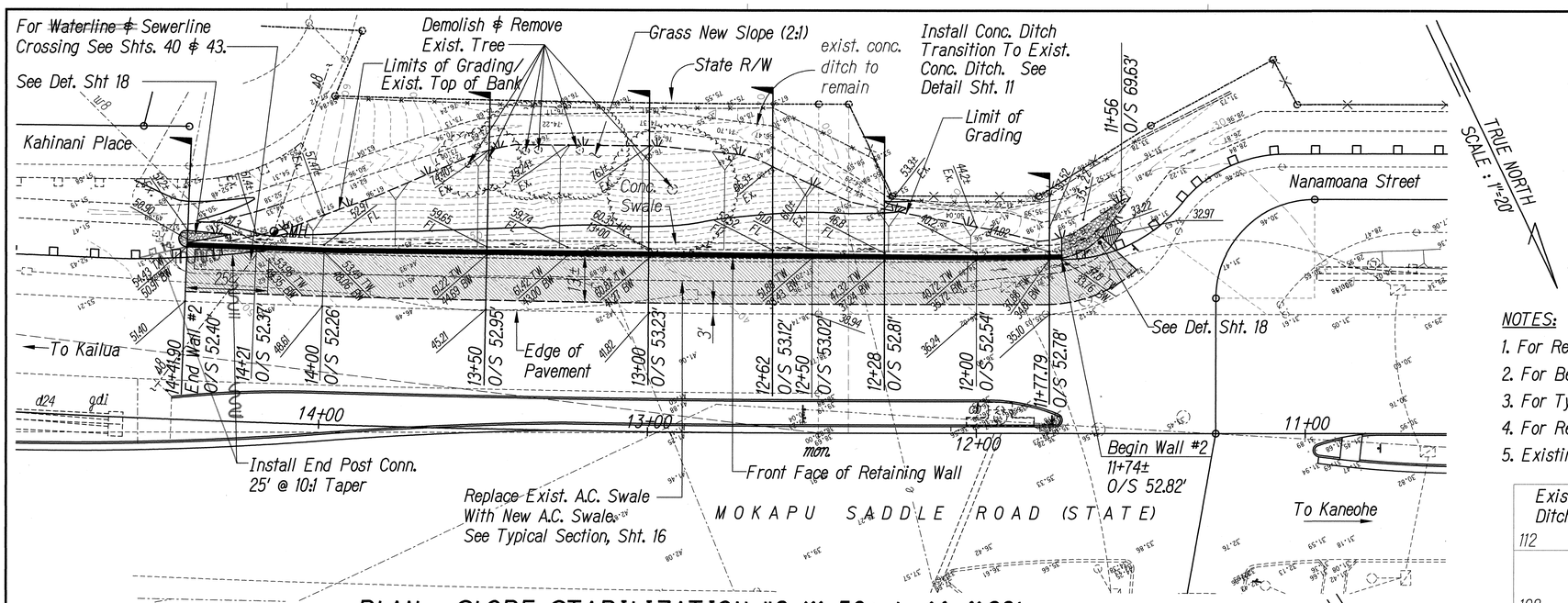

PLAN - SLOPE STABILIZATION #2 (11+56± to 14+41.90)

SCALE: 1"=20'

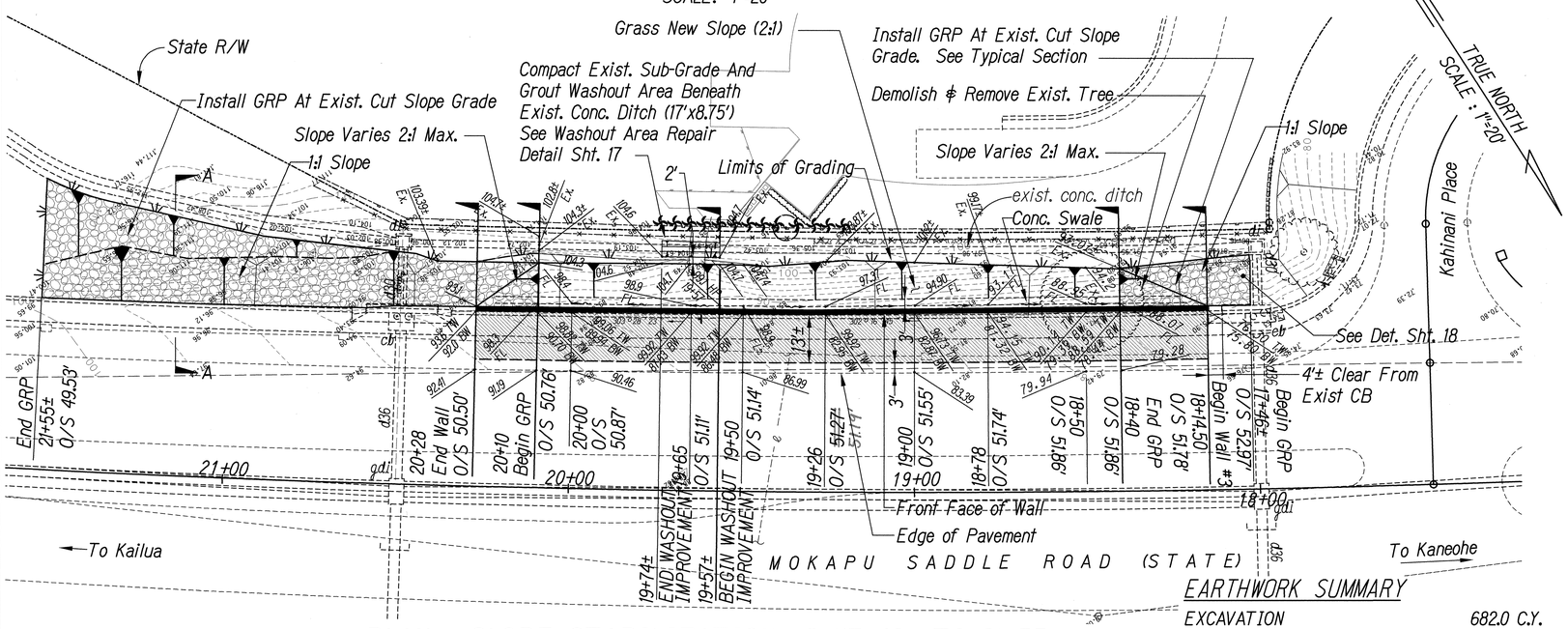

PLAN - SLOPE STABILIZATION #3 (17+46± TO 21+55±)

SCALE: 1"=20'

EARTHWORK SUMMARY

EXCAVATION	682.0 C.Y.
EMBANKMENT:	
① Low Expansive Impermeable Soil	334.0 C.Y.
② Select Granular Fill	89.4 C.Y.
③ 3B Fine Gravel	228.0 C.Y.
Area to be Graded	0.14 Acres

EARTHWORK SUMMARY

EXCAVATION:	1,046.0 C.Y.
EMBANKMENT:	
① Low Expansive Impermeable Soil	705.0 C.Y.
② Select Granular Fill	175.0 C.Y.
③ 3B Fine Gravel	463.0 C.Y.
Area to be Graded	0.16 Acres

NOTES:

1. For Retaining Wall Sections & Profiles, See Structural Drawings.
2. For Benchmark, See Sheet 11.
3. For Typical Civil Retaining Wall Section, See Sheets 16 & 17.
4. For Retaining Wall Cross Sections, See Sheet 14.
5. Existing Traffic Signal Design Per STP-065-(7).

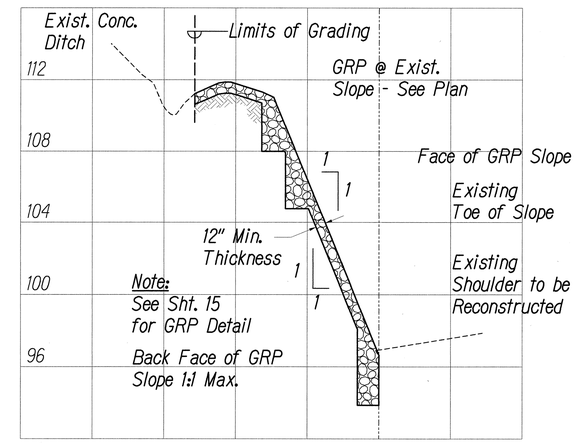

SECTION "A-A"

Scales: HORIZ 1"=10'
VERT 1"=4'

Approved:

~~Leader, Maintenance Unit, BWS~~ ~~Date~~

Chief, Wastewater Branch, DPP — 5/15/01 Date

ALAN Y. TOMITA LICENSED PROFESSIONAL ENGINEER NO. 4129-C HAWAII, U.S.A.

THIS WORK WAS PREPARED BY ME OR UNDER MY SUPERVISION.

STATE OF HAWAII
DEPARTMENT OF TRANSPORTATION
HIGHWAYS DIVISION

RETAINING WALL PLANS

MOKAPU SADDLE ROAD SLOPE STABILITY
Vicinity of Mikiola Dr. to Kahinani Place
Project No. 65B-01-01M

Scale: 1"=20' Date: May, 2001

SHEET No. 2 OF 8 SHEETS

ORIGINAL PLAN | SURVEY PLOTTED BY | DRAWN BY | TRACED BY | DESIGNED BY | QUANTITIES BY | CHECKED BY | DATE | NOTE BOOK No.

FED. ROAD DIST. NO.	STATE	PROJ. NO.	FISCAL YEAR	SHEET NO.	TOTAL SHEETS
HAWAII	HAW.	65B-01-01M	2001	13	58

LEGEND:

- (1) Low Expansive Impermeable Soil
- (2) Select Granular Fill
- (3) 3B Fine Gravel
- GRP
- Structural Excavation Limit

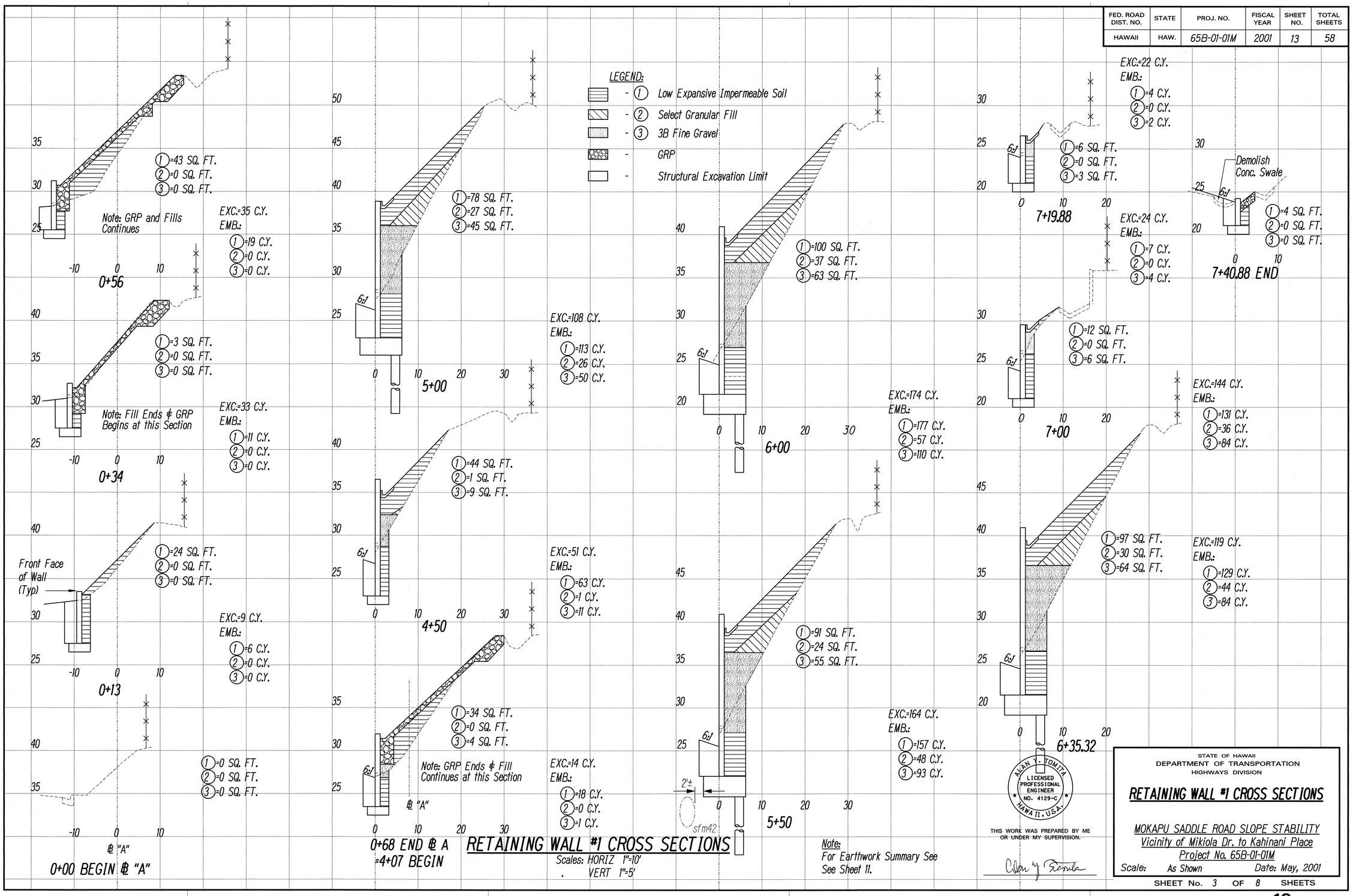

RETAINING WALL #1 CROSS SECTIONS

Scales: HORIZ 1"=10'
VERT 1"=5'

Note:
For Earthwork Summary See See Sheet 11.

ALAN Y. TOMITA
LICENSED PROFESSIONAL ENGINEER
NO. 4129-C
HAWAII, U.S.A.

THIS WORK WAS PREPARED BY ME OR UNDER MY SUPERVISION.

STATE OF HAWAII
DEPARTMENT OF TRANSPORTATION
HIGHWAYS DIVISION

RETAINING WALL #1 CROSS SECTIONS

MOKAPU SADDLE ROAD SLOPE STABILITY
Vicinity of Mikiola Dr. to Kahinani Place
Project No. 65B-01-01M

Scale: As Shown Date: May, 2001

SHEET No. 3 OF 8 SHEETS

ORIGINAL PLAN	SURVEY PLOTTED BY	DATE
	DRAWN BY	
	TRACED BY	
NOTE BOOK	DESIGNED BY	
	QUANTITIES BY	
	CHECKED BY	
No.		

FED. ROAD DIST. NO.	STATE	PROJ. NO.	FISCAL YEAR	SHEET NO.	TOTAL SHEETS
HAWAII	HAW.	65B-01-01M	2001	14	58

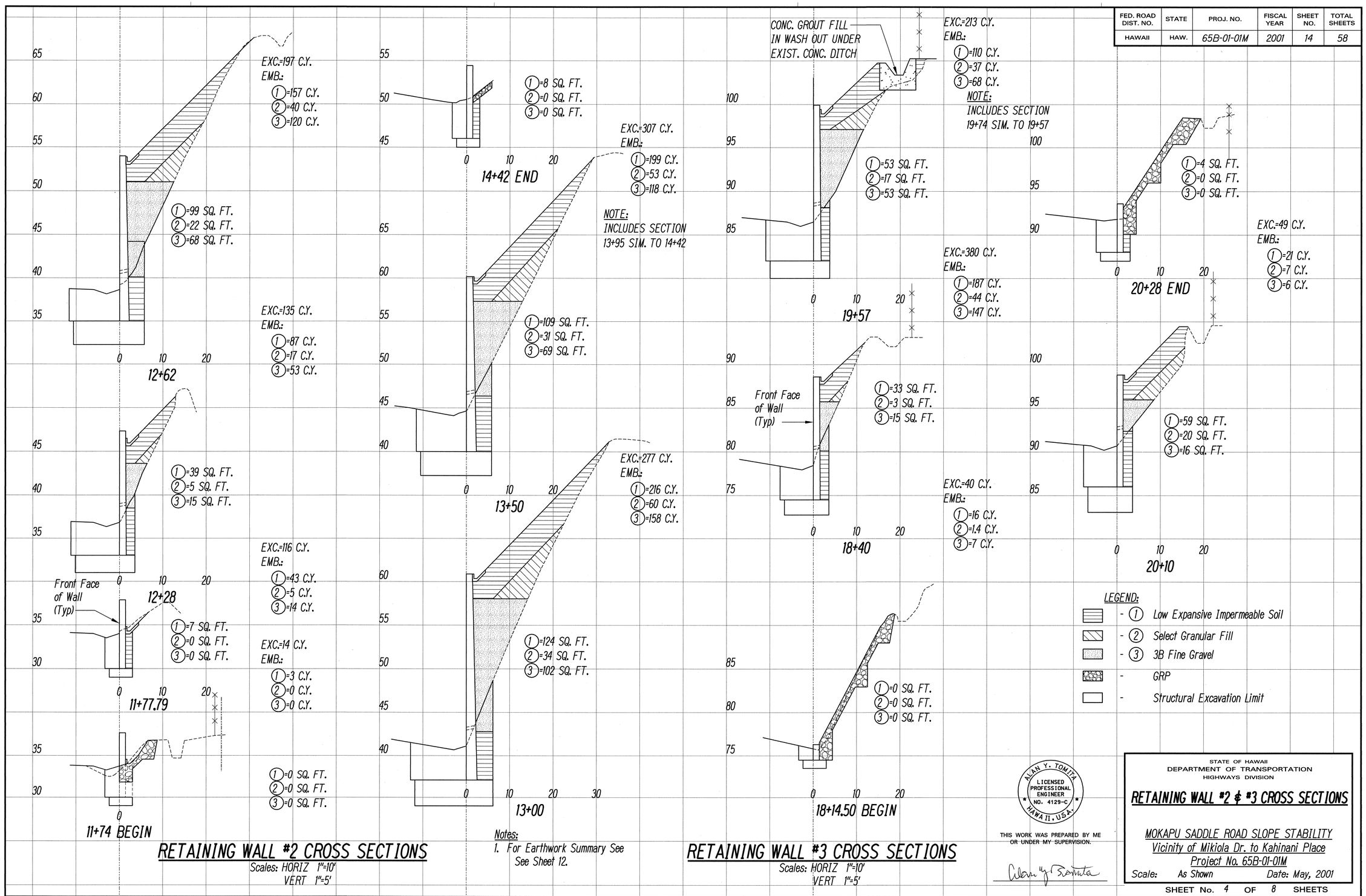

RETAINING WALL #2 CROSS SECTIONS

Scales: HORIZ 1"=10'
VERT 1"=5'

Notes:

1. For Earthwork Summary See See Sheet 12.

RETAINING WALL #3 CROSS SECTIONS

Scales: HORIZ 1"=10'
VERT 1"=5'

ALAN Y. TOMITA
LICENSED PROFESSIONAL ENGINEER
NO. 4129-C
HAWAII, U.S.A.

THIS WORK WAS PREPARED BY ME OR UNDER MY SUPERVISION.

STATE OF HAWAII
DEPARTMENT OF TRANSPORTATION
HIGHWAYS DIVISION

RETAINING WALL #2 & #3 CROSS SECTIONS

MOKAPU SADDLE ROAD SLOPE STABILITY
Vicinity of Mikiola Dr. to Kahinani Place
Project No. 65B-01-01M

Scale: As Shown Date: May, 2001

SHEET No. 4 OF 8 SHEETS

ORIGINAL PLAN | SURVEY PLOTTED BY | DRAWN BY | TRACED BY | DESIGNED BY | QUANTITIES BY | CHECKED BY | DATE | NOTE BOOK No.

FED. ROAD DIST. NO.	STATE	PROJ. NO.	FISCAL YEAR	SHEET NO.	TOTAL SHEETS
HAWAII	HAW.	65B-01-01M	2001	15	58

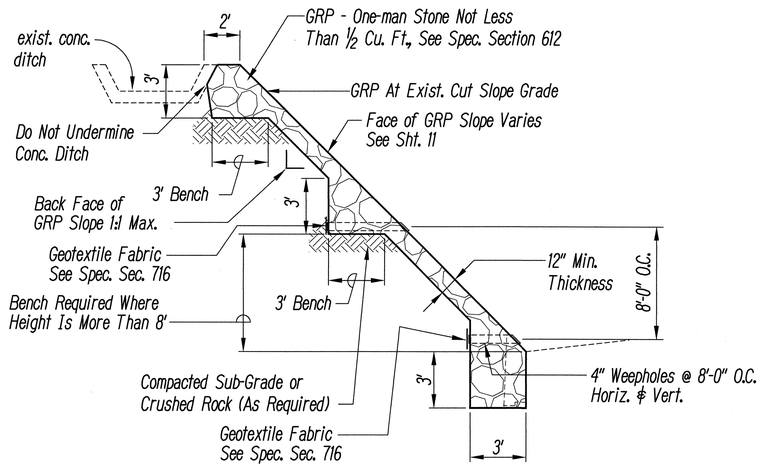

TYPICAL GRP DETAIL

Not to Scale

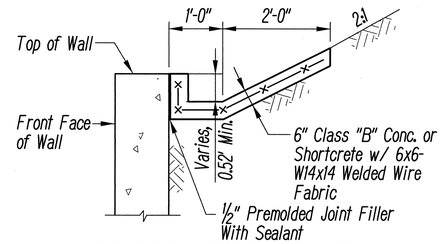

TYPICAL CONC. SWALE

Not to Scale

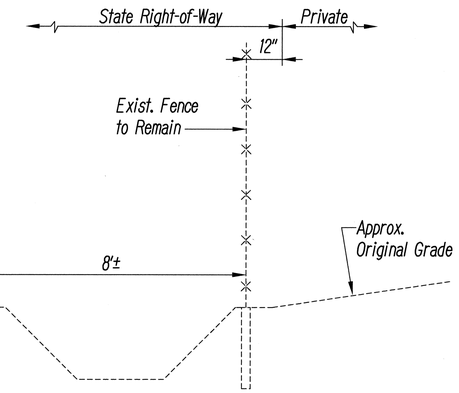

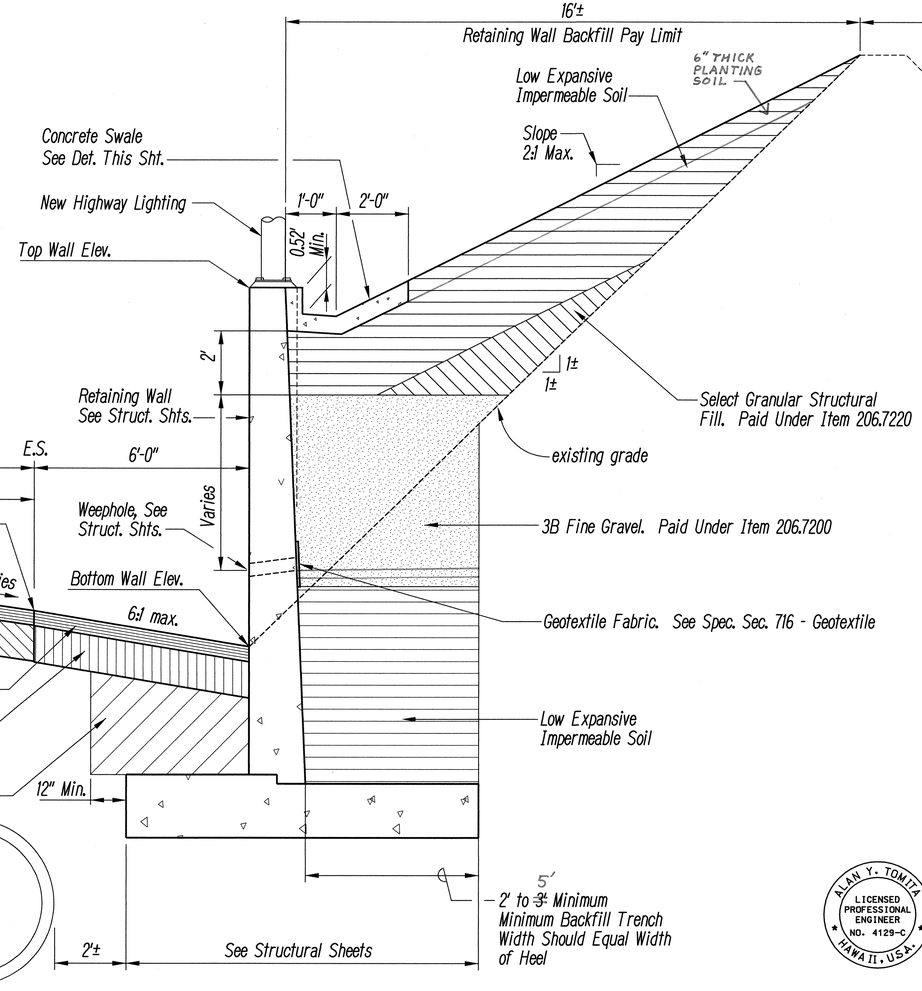

TYPICAL SECTION AT RETAINING WALL #1

Not to Scale

NOTES:

1. See Structural Section For Backfill Requirements And Retaining Wall Details.
2. Backfill Requirements As Per Geotechnical Report By Geolabs, 2000.

* Slope Will Vary At 25' Transition To Existing Grade.

Note:
Excavation Cost For Pavement Structure Above Retaining Wall Footing Shall Be Included In Structural Excavation. See Sheet 39.

ORIGINAL PLAN | SURVEY PLOTTED BY | DRAWN BY | TRACED BY | DESIGNED BY | QUANTITIES BY | CHECKED BY | DATE | NOTE BOOK | No.

ALAN Y. TOMITA LICENSED PROFESSIONAL ENGINEER NO. 4129-C HAWAII, U.S.A.

THIS WORK WAS PREPARED BY ME OR UNDER MY SUPERVISION.

STATE OF HAWAII
DEPARTMENT OF TRANSPORTATION
HIGHWAYS DIVISION

RETAINING WALL DETAILS

MOKAPU SADDLE ROAD SLOPE STABILITY
Vicinity of Mikiola Dr. to Kahinani Place
Project No. 65B-01-01M

Scale: None Date: May, 2001

SHEET No. 5 OF 8 SHEETS

FED. ROAD DIST. NO.	STATE	PROJ. NO.	FISCAL YEAR	SHEET NO.	TOTAL SHEETS
HAWAII	HAW.	65B-01-01M	2001	16	58

TYPICAL CONC. SWALE

Not to Scale

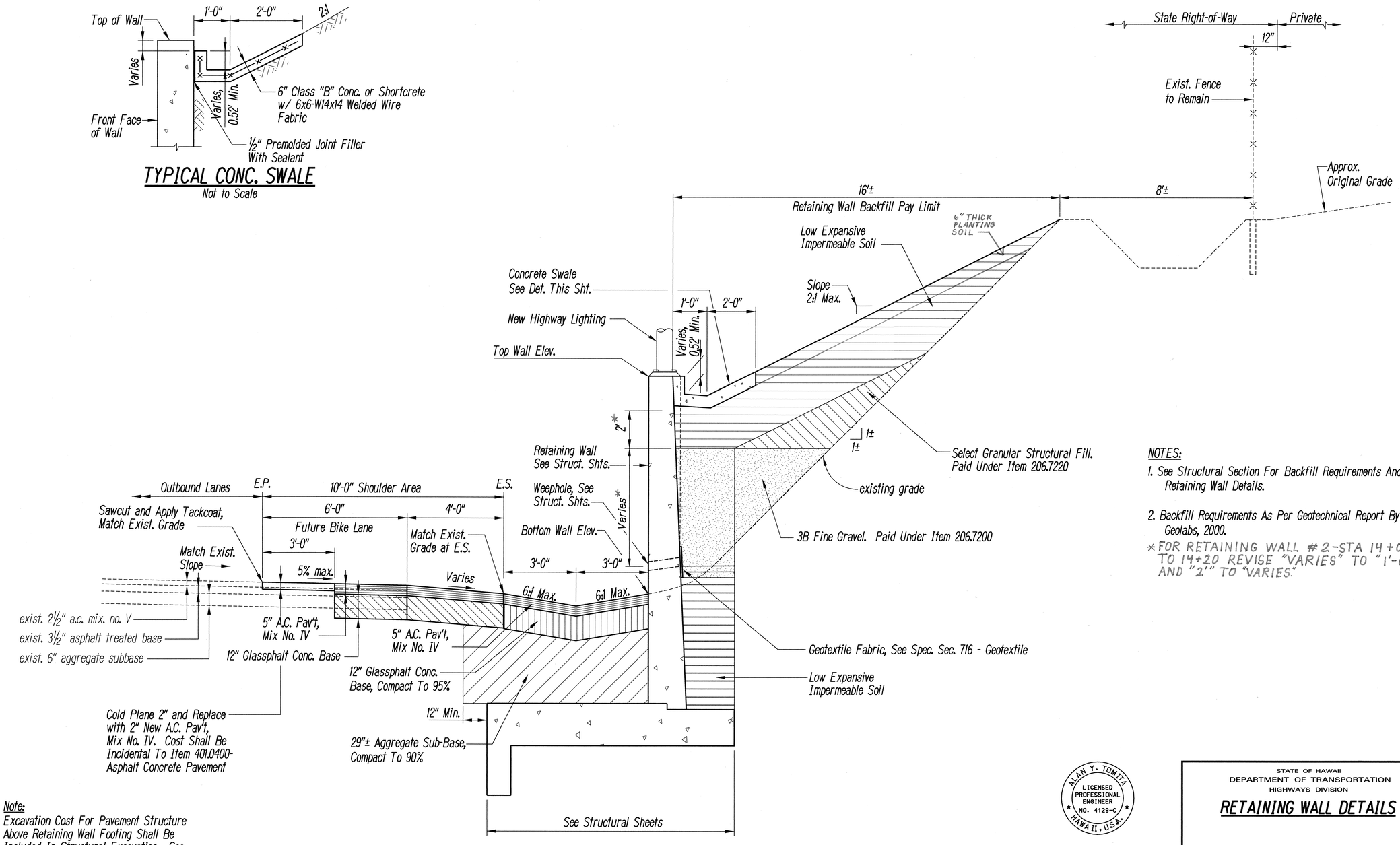

NOTES:

1. See Structural Section For Backfill Requirements And Retaining Wall Details.
2. Backfill Requirements As Per Geotechnical Report By Geolabs, 2000.

*FOR RETAINING WALL #2-STA 14+00 TO 14+20 REVISE "VARIES" TO "1'-0" AND "2'" TO "VARIES."

Note:
Excavation Cost For Pavement Structure Above Retaining Wall Footing Shall Be Included In Structural Excavation. See Sheet 39.

TYPICAL SECTION AT RETAINING WALL #2 & PORTION OF WALL #3

Not to Scale

ALAN Y. TOMITA
LICENSED PROFESSIONAL ENGINEER
NO. 4129-C
HAWAII, U.S.A.

THIS WORK WAS PREPARED BY ME OR UNDER MY SUPERVISION.

STATE OF HAWAII
DEPARTMENT OF TRANSPORTATION
HIGHWAYS DIVISION

RETAINING WALL DETAILS

MOKAPU SADDLE ROAD SLOPE STABILITY
Vicinity of Mikiola Dr. to Kahinani Place
Project No. 65B-01-01M

Scale: None Date: May, 2001

SHEET No. 6 OF 8 SHEETS

ORIGINAL PLAN | SURVEY PLOTTED BY | DRAWN BY | TRACED BY | DESIGNED BY | QUANTITIES BY | CHECKED BY | DATE | NOTE BOOK No.

FED. ROAD DIST. NO.	STATE	PROJ. NO.	FISCAL YEAR	SHEET NO.	TOTAL SHEETS
HAWAII	HAW.	65B-01-01M	2001	17	58

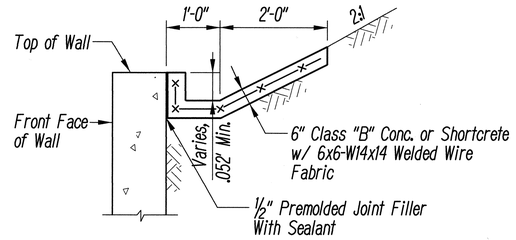

TYPICAL CONC. SWALE

Not to Scale

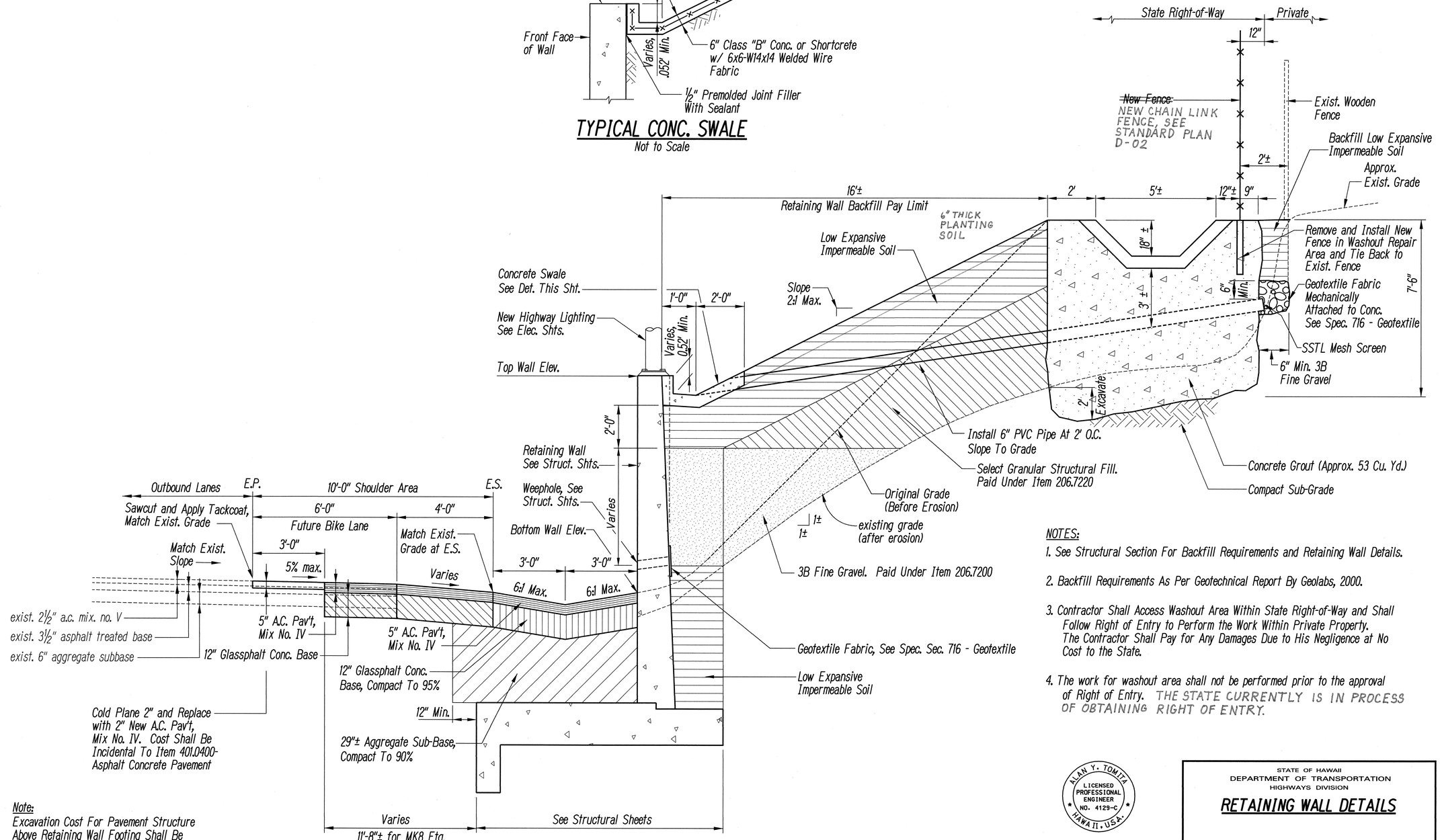

Note:
Excavation Cost For Pavement Structure Above Retaining Wall Footing Shall Be Included In Structural Excavation. See Sheet 39.

TYPICAL SECTION AT RETAINING WALL #3 (WASHOUT AREA)
(STA. 19+57± TO STA. 19+74±)

Not to Scale

NOTES:

1. See Structural Section For Backfill Requirements and Retaining Wall Details.
2. Backfill Requirements As Per Geotechnical Report By Geolabs, 2000.
3. Contractor Shall Access Washout Area Within State Right-of-Way and Shall Follow Right of Entry to Perform the Work Within Private Property. The Contractor Shall Pay for Any Damages Due to His Negligence at No Cost to the State.
4. The work for washout area shall not be performed prior to the approval of Right of Entry. THE STATE CURRENTLY IS IN PROCESS OF OBTAINING RIGHT OF ENTRY.

ALAN Y. TOMITA
LICENSED PROFESSIONAL ENGINEER
NO. 4129-C
HAWAII, U.S.A.

THIS WORK WAS PREPARED BY ME OR UNDER MY SUPERVISION.

Alan Y. Tomita

STATE OF HAWAII
DEPARTMENT OF TRANSPORTATION
HIGHWAYS DIVISION

RETAINING WALL DETAILS

MOKAPU SADDLE ROAD SLOPE STABILITY
Vicinity of Mikiola Dr. to Kahinani Place
Project No. 65B-01-01M

Scale: None Date: May, 2001

SHEET No. 7 OF 8 SHEETS

ORIGINAL PLAN	SURVEY PLOTTED BY	DATE
	DRAWN BY	
	TRACED BY	
NOTE BOOK	DESIGNED BY	
	QUANTITIES BY	
No.	CHECKED BY	

FED. ROAD DIST. NO.	STATE	PROJ. NO.	FISCAL YEAR	SHEET NO.	TOTAL SHEETS
HAWAII	HAW.	65B-01-01M	2001	18	58

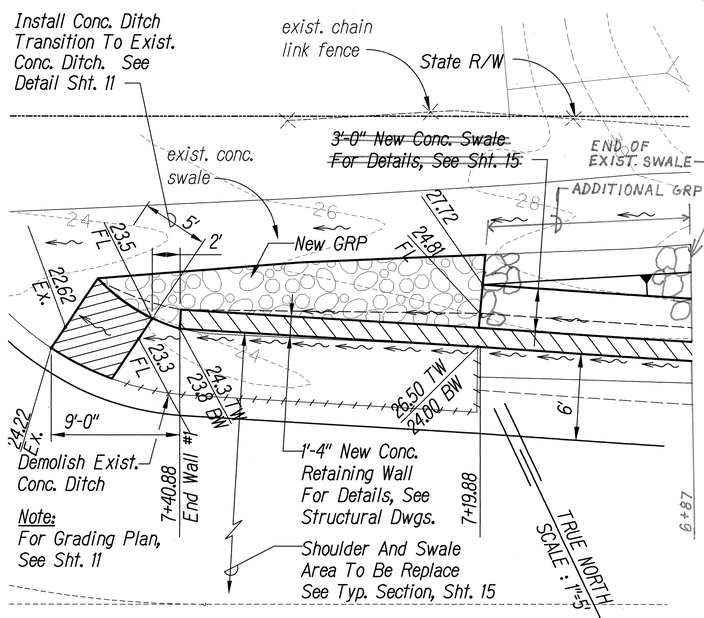

PLAN - RETAINING WALL #1 (END)

SCALE: 1"=5'

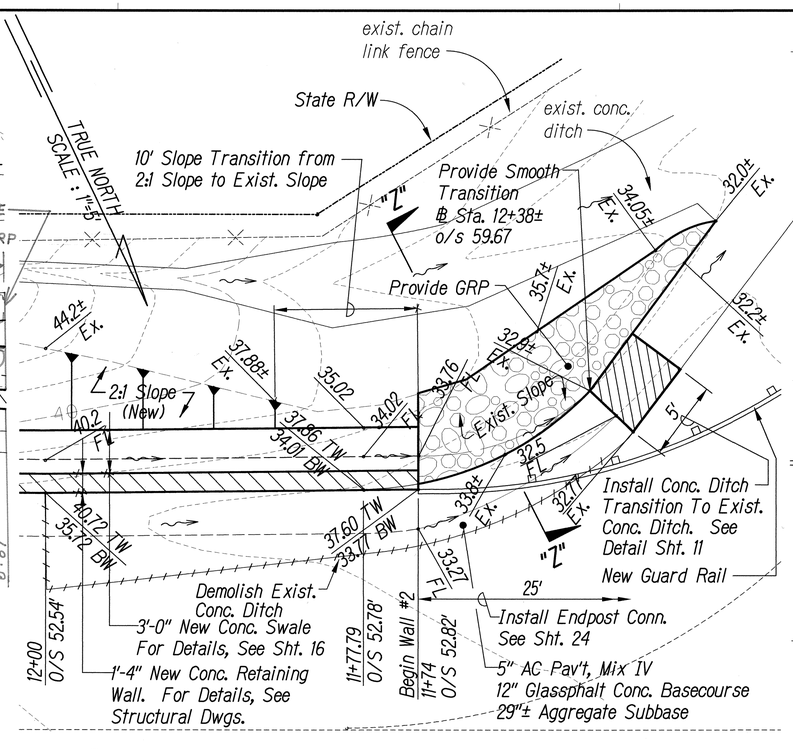

PLAN - RETAINING WALL #2 (BEGIN)

SCALE: 1"=5'

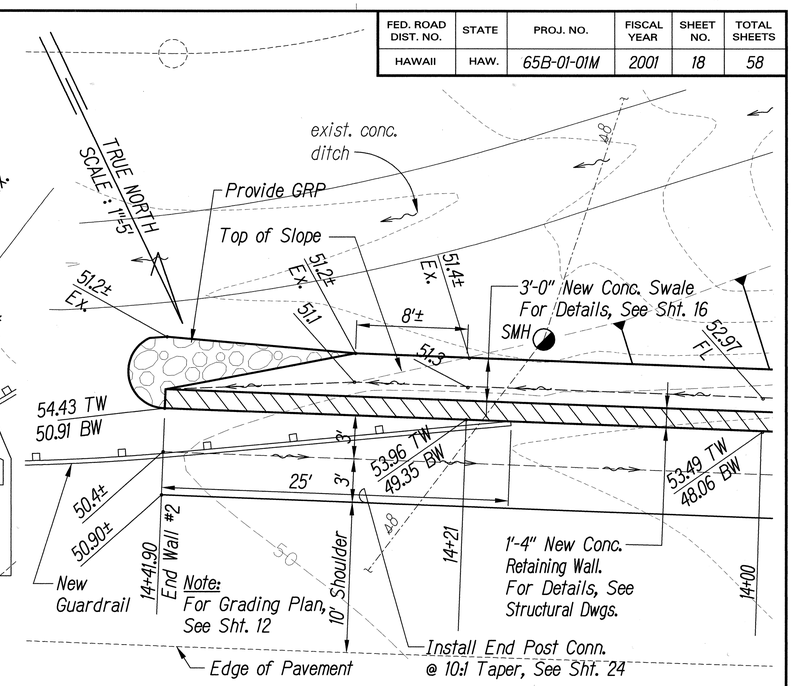

PLAN - RETAINING WALL #2 (END)

SCALE: 1"=5'

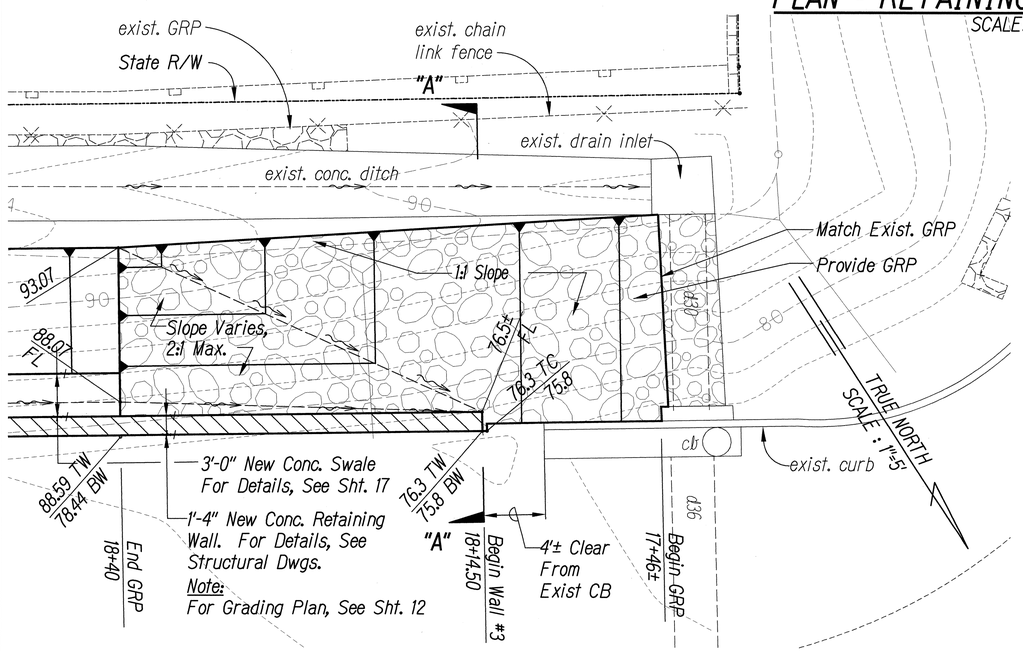

PLAN - RETAINING WALL #3 (BEGIN)

SCALE: 1"=5'

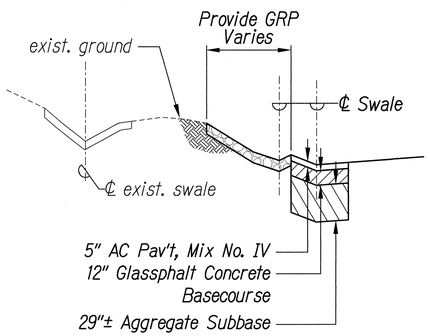

SECTION "Z-Z"

SCALE: 1"=5'

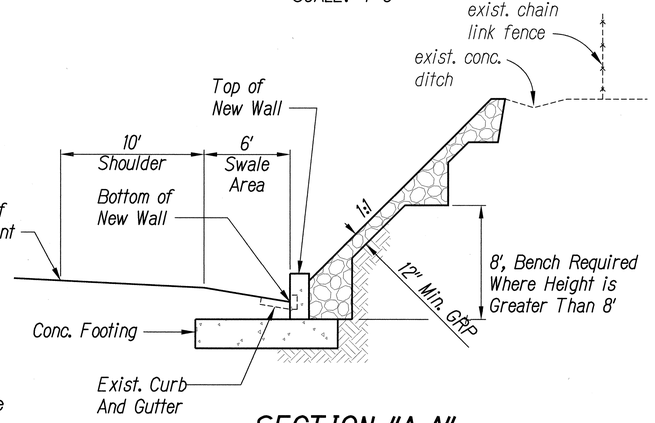

SECTION "A-A"

SCALE: 1"=5'

ORIGINAL PLAN	SURVEY PLOTTED BY	DATE
	DRAWN BY	
	TRACED BY	
NOTE BOOK	DESIGNED BY	
	QUANTITIES BY	
No.	CHECKED BY	

ALAN Y. TOMITA
LICENSED PROFESSIONAL ENGINEER
NO. 4129-C
HAWAII, U.S.A.

THIS WORK WAS PREPARED BY ME OR UNDER MY SUPERVISION.

STATE OF HAWAII
DEPARTMENT OF TRANSPORTATION
HIGHWAYS DIVISION

RETAINING WALL PLANS

MOKAPU SADDLE ROAD SLOPE STABILITY
Vicinity of Mikiola Dr. to Kahinani Place
Project No. 65B-01-01M

Scale: 1"=5' Date: May, 2001

SHEET No. 8 OF 8 SHEETS