FED. ROAD DIST. NO.	STATE	FED. AID PROJ. NO.	FISCAL YEAR	SHEET NO.	TOTAL SHEETS
HAWAII	HAW.	STP-065-1(7)	2000	21	22

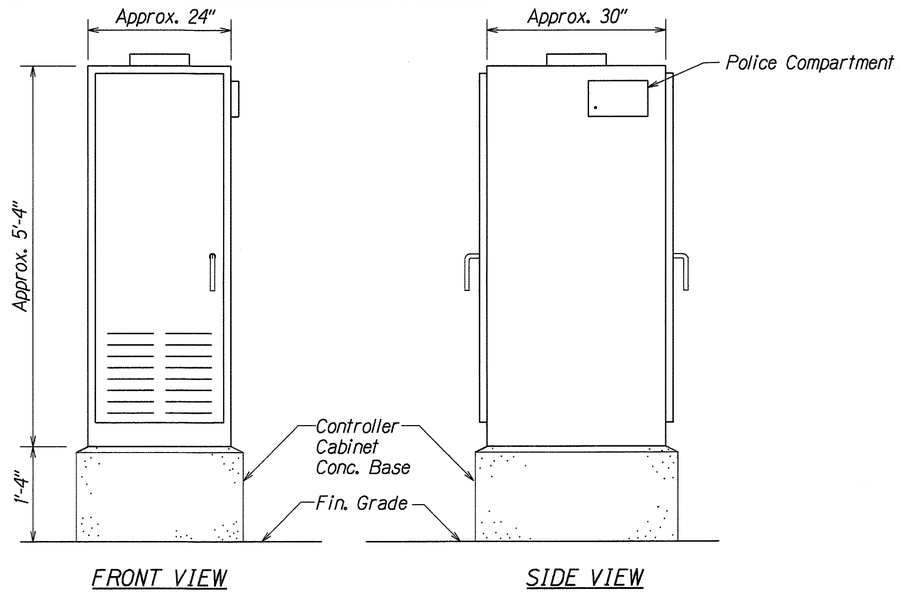

TYPE 332A TRAFFIC SIGNAL CONTROLLER CABINET DETAIL

N.T.S

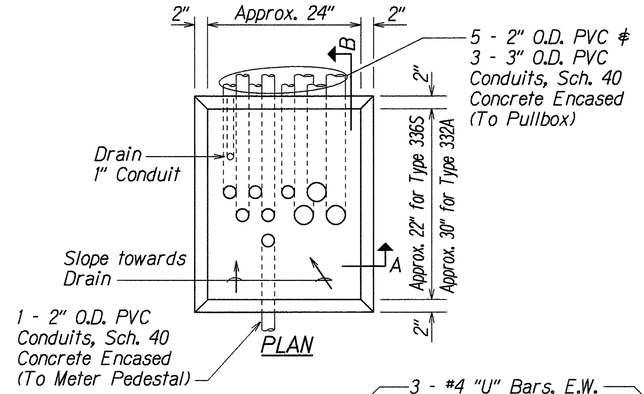

NOTES:

1. Concrete shall be class "B".
2. Dimensions shall be altered to suit controller cabinet actually furnished.
3. Conduits bends and drain are incidental to concrete base
4. Refer to Cabinet Manufacturer's Specifications for details of anchor bolts and base setting.
5. All exposed surfaces of concrete base shall be given a class 2, rubbed finish.

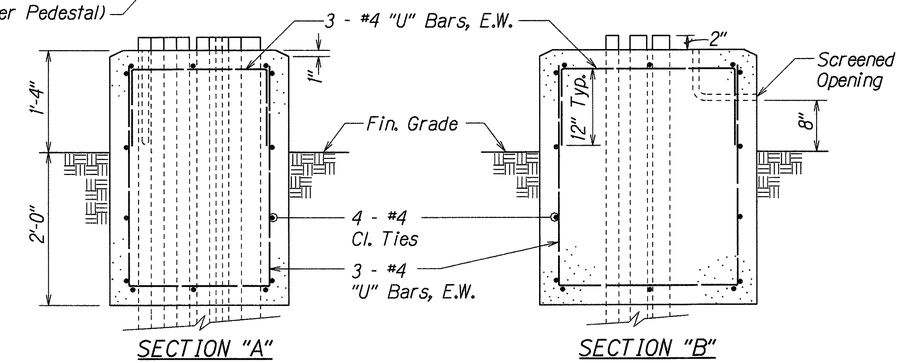

CONTROLLER CABINET CONCRETE BASE

N.T.S

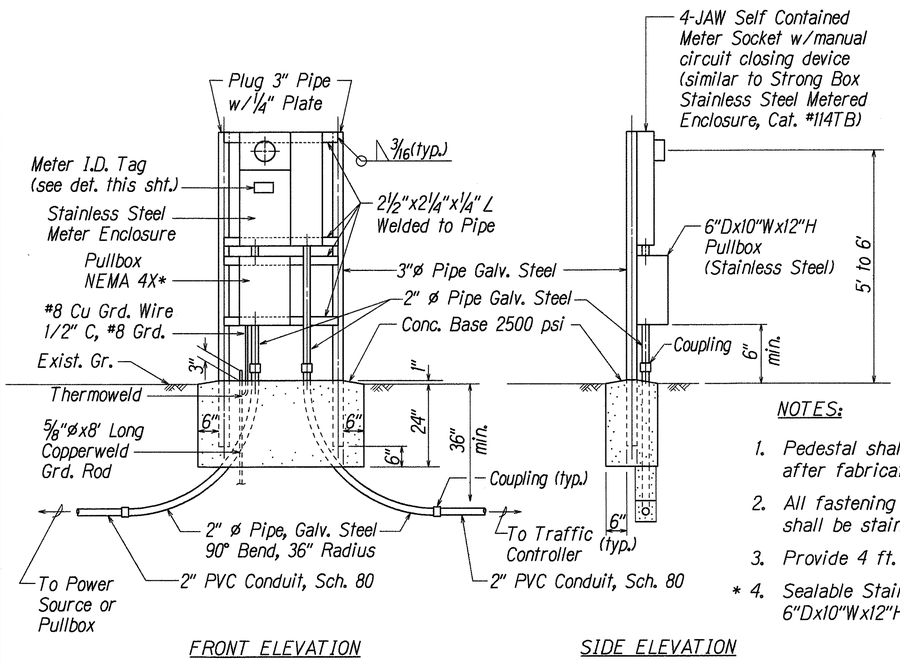

NOTES:

1. Pedestal shall be hot-dipped galvanized after fabrication.
2. All fastening bolts, nuts & washers shall be stainless steel.
3. Provide 4 ft. clearance in front of meter.
* 4. Sealable Stainless Steel Enclosure 6"Dx10"Wx12"H.

METER PEDESTAL FOR UNDERGROUND SERVICE

N.T.S.

NOTES:

1. Use 3-ply laminated flexible plastic, black-white-black thickness: black cap sheet - 0.010", white base sheet - 0.052", black base sheet - 0.010".
2. Attach to Meter Socket using Scotch 3M Brand very high bond (VHB) double coated acrylic foam tape or equivalent.
3. Letters/Numbers shall be 1/16" stroke, (white in color).
4. Letters/Numbers area inscribed by cutting through "black cap sheet" to expose white letters/numbers.

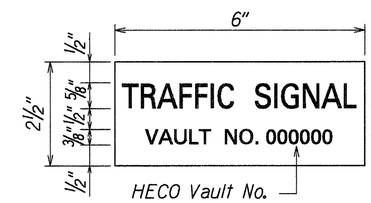

METER ID TAG DETAIL

N.T.S

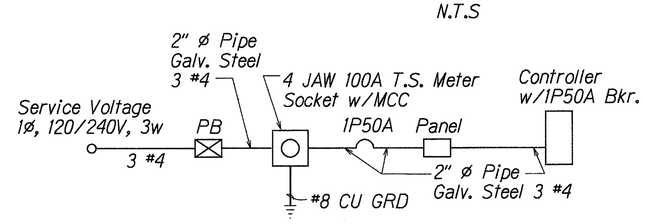

ONE LINE DIAGRAM

STATE OF HAWAII
DEPARTMENT OF TRANSPORTATION
HIGHWAYS DIVISION

CONTROLLER CABINET DETAILS

MOKAPU SADDLE ROAD
Traffic Signals at Kaneohe Bay Drive
Fed. Aid Project No. STP-065-1(7)

Not to Scale — Date: June, 1999

SHEET No. 1 OF 1 SHEETS

ORIGINAL PLAN	SURVEY PLOTTED BY	DATE
	DRAWN BY M. Takafuji	12/29/97
	PLACED BY	
NOTE BOOK	TRANSCRIBED BY Richard Akana	
fol.nay	QUANTITIES BY	
No. 3/sht/1abd	CHECKED BY	