FED. ROAD DIST. NO.	STATE	FED. AID PROJ. NO.	FISCAL YEAR	SHEET NO.	TOTAL SHEETS
HAWAII	HAW.	NH-064-1(8)	2002	9	45

INDEX TO DRAWINGS

SHEET NO.	DESCRIPTION
S-1	Index to Drawings, Estimated Quantities
S-2	General Structural Notes
S-3	Existing Bascule and Concrete Bridge Layout, Existing Bascule Bridge Elevation
S-4	Existing Bascule Bridge Removal/Replacement/Repair Key Plan
S-5	Existing Nimitz Approach Layout Plan
S-6	Partial Existing Bascule Bridge Layout Plan – North Leaf
S-7	Partial Existing Bascule Bridge Layout Plan – South Leaf
S-8	Existing Sand Island Approach Layout Plan
S-9	Construction Sequence
S-10	Removal/Replacement/Repair Schedule
S-11	Mark 1 –Schematic Transverse Deck Section At Grid line 4
S-12	Mark 2 –Open Grid Steel Bridge Deck Replacement Details
S-13	Mark 2A –Open Grid Steel Bridge Deck/New Bracing Details
S-14	Mark 2A –Open Grid Steel Bridge Deck/New Bracing Details
S-15	Mark 3 –W16x36 L.A. Stringer Repair Details
S-16	Mark 4 –Joint Cover Replacement Details
S-17	Mark 4 –Joint Cover Replacement Details, Mark 5 Sections
S-18	Mark 5 –Finger Joint Replacement Details
S-19	Mark 6 –Endpost Removal Details
S-20	Mark 6 –Endpost Replacement Details, Strip Seal Gland Replacement Details
S-21	Mark 6 –Endpost Replacement Details, Mark 6A –Repair Concrete Deck Spalls
S-22	Mark 7 –End Treatment Replacement Details
S-23	FLEAT 350
S-24	Guardrail Details & Notes
S-25	Strong Post W-Beam Guardrail
S-26	Terminal Impact Attenuator Details
S-27	Thrie Beam & Appurtenance Details
S-28	Thrie Beam & Appurtenance Details
S-29	Bridge Painting Key Plan
S-30	Existing Cross-Section at Approach Spans
S-31	Existing Cross Sections at Pier (Abutment Similar)
S-32	Existing Approach Span Girder Elevations and Sections
S-33	Existing Sections
S-34	Existing Cross-Sections at Bascule Bridge Floor Beams
S-35	Existing Miscellaneous Details
S-36	Existing Main Girder – Partial Longitudinal Elevation
S-37	Existing Main Girder – Partial Longitudinal Elevation

ESTIMATED BRIDGE QUANTITIES

ITEM NO.	ITEM	EST. QUAN.	PAYMENT UNIT
202.0100	Removal Of Metal Deck	(8,200 S.F.)	L.S.
202.0101	Removal Of Endpost	(4 EA.)	L.S.
202.0301	Removal Of Double Angle At Gridline No. 4	(1 EA.)	L.S.
202.0302	Removal Of Deck Joint Cover Plate	(32 L.F.)	L.S.
202.0303	Removal Of Existing Asphalt Pavement At End Post	(10 C.Y.)	L.S.
206.5100	Structural Excavation For End Post Footing	60	C.Y.
206.7000	Structural Backfill For End Post Footing	50	C.Y.
501.0110	Structural Steel For Metal Deck	8,200	S.F.
501.0210	Structural Steel For Double Angle At Gridline No.4	(11 L.F.)	L.S.
501.0211	Structural Steel For Deck Joint Cover Plate	(32 L.F.)	L.S.
501.0212	Structural Steel For Bent Plate 6x4x1/4	(150 L.F.)	L.S.
501.0213	Structural Steel for Finger Joint and Finger Joint Supports	(32 L.F.)	L.S.
501.0214	Structural Steel for New Bracing	(23,000 LBS.)	L.S.
501.0300	Miscellaneous Structural Steel Repairs	(8,500 S.F.)	F.A.
503.1400	Concrete In Endpost Structure	(6 C.Y.)	L.S.
503.1410	Concrete in Footings For Endpost Structure	(14 C.Y.)	L.S.
585.1000	Replace Strip Seal Glands	(210)	L.F.
602.0090	Reinforcing Steel for Endpost Structure	(1,050 LBS.)	L.S.
602.0091	Reinforcing Steel in Footings for Endpost Structure	(2,300 LBS.)	L.S.
647.0100	Maintenance of Bridge Trunnion Bearings	(4 EA.)	L.S.
648.0100	Skid Resistance System	(8,200 S.F.)	L.S.
676.0100	Spall Repair	2,000	S.F.
695.1000	Certified Industrial Hygienist	L.S.	L.S.
695.2000	Industrial Hygienist Technician	L.S.	L.S.
696.0100	Clean and Paint Bascule Bridge Steel Members	(85,000 S.F.)	L.S.

ORIGINAL PLAN	SURVEY PLOTTED BY	DATE
	DRAWN BY	
NOTE BOOK	TRACED BY S. WILLIAMS	11/02
	DESIGNED BY S. WILLIAMS	11/02
No.	QUANTITIES BY K. KALANI	11/02
	CHECKED BY	

STEWART N. WILLIAMS
LICENSED PROFESSIONAL ENGINEER
No. 3908-S
HAWAII, U.S.A.
Expires 4/04

THIS WORK WAS PREPARED BY ME OR UNDER MY SUPERVISION.

Mitsunaga & Associates, Inc.

Structural Review By

STATE OF HAWAII
DEPARTMENT OF TRANSPORTATION
HIGHWAYS DIVISION

INDEX TO DRAWINGS, ESTIMATED QUANTITIES
SAND ISLAND PARKWAY
BASCULE BRIDGE DECK REPLACEMENT
DISTRICT OF HONOLULU
Federal Aid Project No. NH-064-1(8)

Scale: As Noted NOVEMBER 2002

SHEET No. S-1 OF 37 SHEETS

FED. ROAD DIST. NO.	STATE	FED. AID PROJ. NO.	FISCAL YEAR	SHEET NO.	TOTAL SHEETS
HAWAII	HAW.	NH-064-1(8)	2002	10	45

GENERAL STRUCTURAL NOTES

I. General Specifications: Hawaii Department Of Transportation, Hawaii Standard Specifications For Road, Bridge And Public Works Construction, 1994.

II. Design Specifications: AASHTO 1998 LRFD Bridge Design Specifications, 2nd Edition And Its Subsequent 1999, 2000 AND 2001 Interim Revisions.

III. Concrete

A. Minimum 28-Day Concrete Compressive Strength For New Concrete: 4000 PSI

B. Reinforcing Steel

1. All New Deformed Reinforcing Bars: ASTM A615, Grade 60.

C. Concrete Protection For Reinforcing (Unless Otherwise Noted)

1. Bottom And Sides Of Footings And Where Concrete Deposited On Grade = 3" Clr.
2. Formed Surface Exposed To Earth Or Weather = 2" Clr.
3. Formed Surfaces Not Exposed To Earth Or Weather = 1-1/2" Clr.

IV. Structural Steel

A. Materials

1. All Structural Bolts Shall Be Hot-Dip Galvanized And Conform To The Following Specifications:
   a. ASTM A307, Grade A For Bolts Embedded In Concrete.
   b. ASTM A325, Type 1 For Steel To Steel Connections.
2. Nuts Shall Be Hot-Dip Galvanized And Conform To The Following Specifications:
   a. ASTM A563, Grade DH For All Galvanized Bolts.
3. Washers, Where Required, Shall Conform To ASTM F436, Type 1 And Shall Be Hot-Dip Galvanized. Washers Are Required Where Bolt Holes Are Slotted.
4. All Rolled Shape Sections And Miscellaneous Plates, Bars And Rods Shall Conform To ASTM A572, Grade 50, Hot-Dip Galvanized After Fabrication.
5. Shop Welds Shall Have A Minimum Ultimate Strength Of 70,000 PSI.
6. Field Welds Shall Have A Minimum Ultimate Strength Of 60,000 PSI.

B. All ASTM A307 Bolts Shall Be Shear-Bearing Snug Tight Type With Threads Excluded From The Shear Plane Unless Otherwise Noted.

C. ALL ASTM A325 Bolts Shall Be Shear-Bearing Snug Tight Type With Threads Not Required To Be Excluded From The Shear Plane Unless Otherwise Noted.

D. All Steel To Steel Connections Shall Be Full Welded Unless Noted Otherwise.

V. Foundation

A. Bottom Of Footings Shall Be As Indicated On The Drawings And Shall Bear On Firm On-Site Soils Or Properly Compacted Fill.

B. All Fill And Backfill Material Shall Be Placed In Loose Lifts Not Exceeding 8 Inches And Compacted To At Least 95 Percent of the Maximum Dry Density As Determined By ASTM D1557-91 Procedure "C".

C. Any Loose Or Soft Soil Encountered During Excavation Or Subgrade Compaction Operations Shall Be Removed To Firm Soil And Replaced With Properly Compacted Fill.

D. It Is Important That All Backfill Material Next To Footings And Footing Keys Are Properly Compacted In Order To Provide Proper Lateral Earth Resistance For Structures.

E. All Bottom Of Footing Excavations Shall Be Thoroughly Tamped Prior To Placement Of Reinforcing Steel.

F. The Engineer Shall Be Notified To Observe All Footing Excavations Prior To Placement Of Reinforcing Steel And Concrete.

VI. Corrosion Control

A. All Ferrous Surfaces Shall Be Hot-Dip Galvanized After Fabrication.

B. All Ferrous Surfaces In Contact With Dissimilar Surfaces Shall Be Coated With Bituminous Paint, 20 Mils Dry Film Thickness.

C. All Galvanized Surfaces Scheduled for Painting, Shall Be Prepainted With Epoxy Primer and Polyurethane Top Coats Prior To Erection. [1]

D. Repair Zinc-Coated And Field Welded Surfaces; Clean Areas To Be Repaired And Remove Slags From Welds In Accordance With ASTM A780 Method A1 Or A3.

E. PAINT Galvanized Surfaces (Which are Scheduled for Painting) In Accordance With SSPC Chapter 22 (VOL. 1) "Painting Of Galvanized Steel". Refer to Spec. Prov. Section 696. [1]

F. New Painted Surfaces Shall Match Color With Existing. Refer to Spec. Prov. Section 696. [1]

VII. Design Criteria

A. Live Load:

1. Bridge Deck.....HL-93
2. Bridge Railing / Endpost.....TL-2

VIII. Steel Bridge Framing-Bascule Span-Lead Containing Coating/Paint Notes:

A. Existing Structural Steel Bridge Framing Coating/Paintes-Contains Lead. Refer To Lead-Containing Paint Survey Report By Kimura International-Dated 7/23/01-And Available For Review At The Structural Engineer's Office. Mitsunaga & Associates, Inc., (Stewart Willaims), Ph. 945-7882 ext. 121.

B. Removal And Replacement Of Various Corroded Framing Elements And The Entire Open Grid Steel Bridge Deck-May Potentially Disturb The Existing Lead-Containing Paint(s). Therefore, The Contractor Shall Remove Any Lead-Containing Paint(s) From Surfaces Which May Be Disturbed During Removal And Replacement. The Removal Of Such Lead-Containing Paint(s) Shall be Prior To Structure Removal. Existing Lead-Containing Paint Which Will Be Disturbed During Structure Removal, May Be Left Intact-Provided That The Affected Structure Is [1] Scheduled For Removal And Provided That The Affected Structure/ And Its Lead-Containing Paint Are Properly Remediated/Disposed. Refer To Special Provisions And All EPA, OSHA And HIOSH Regulations Pertaining To The Handling Of Lead.

C. Due To The Bascule Bridge's Proximity To Adjacent Businesses, Boat Harbors And A Public Waterway, The Contractor Shall Provide A Minimum Of Two(2) Class 1A Containment And Ventilation Systems-As Referenced In The AASHTO Guide For Painting Steel Structures Copyright 1997-And The SSPC-Guide 6 I. Each Containment System Shall Be Moveable, Shall Extend Above And Below The Existing Deck Structure, Shall Be A Minimum Of 11'-0" Wide And Be Suitable For Use At Either Of The Two Bridge Leafs Simultaneously-Or-On Separate Bridge Leafs.

D. Comply With All EPA, OSHA, HIOSH Requirements For Worker Safety And Health, Lead Removal, Air Water, Soil Monitoring; Transport And Disposal.

IX. Steel Bridge Girder Framing-Approach Spans-Paint Notes:

A. Existing Structural Steel Bridge Girder Framing Coatings/Paint-Below Approach Span Concrete Decks-Has Been Surveyed By Kimura International For Lead Content. No Measurable Amounts Of Lead Were Found. Refer To Lead-Containing Paint Survey Report By Kimura International And Available For Review At The Structural Engineer's Office-Mitsunaga & Associates, Inc., (Stewart Williams), Ph. 945-7882 ext. 121.

B. Due To The Approach Spans Proximity To Adjacent Businesses, Boat Harbors And A Public Waterway, The Contractor Shall Provide A Minimum Of Two(2) Class 1A Containment And Ventilation Systems-As Referenced In The AASHTO Guide For Painting Steel Structures Copyright 1997-And The SSPC-Guide 6 I. Each Containment System Shall Be Movable, Shall Be A Minimum Of 11'-0" Wide And Be Suitable For Use At The Two Approach Spans.

C. Comply With All EPA, OSHA, HIOSH Requirements For Worker Safety And Health, Lead Removal, Air, Water, Soil Monitoring; Transport And Disposal.

ORIGINAL PLAN	SURVEY PLOTTED BY	DATE
	DRAWN BY	
NOTE BOOK	TRACED BY	11/02
	DESIGNED BY S. WILLIAMS	11/02
	QUANTITIES BY S. WILLIAMS	11/02
No.	CHECKED BY K. KALANI	11/02

STEWART N. WILLIAMS
LICENSED PROFESSIONAL ENGINEER
No. 3908-S
HAWAII, U.S.A.

THIS WORK WAS PREPARED BY ME OR UNDER MY SUPERVISION.
1/16/03

Mitsunaga & Associates, Inc.

KK
Structural Review By

DATE	REVISIONS
1/07/03	[1] Clarified Notes VI. C., E., F.

STATE OF HAWAII
DEPARTMENT OF TRANSPORTATION
HIGHWAYS DIVISION

GENERAL STRUCTURAL NOTES

SAND ISLAND PARKWAY
BASCULE BRIDGE DECK REPLACEMENT
DISTRICT OF HONOLULU
Federal Aid Project No. NH-064-1(8)

Scale: As Noted NOVEMBER 2002

SHEET No. S-2 OF 37 SHEETS

ADD 10

FED. ROAD DIST. NO.	STATE	FED. AID PROJ. NO.	FISCAL YEAR	SHEET NO.	TOTAL SHEETS
HAWAII	HAW.	NH-064-1(8)	2002	11	45

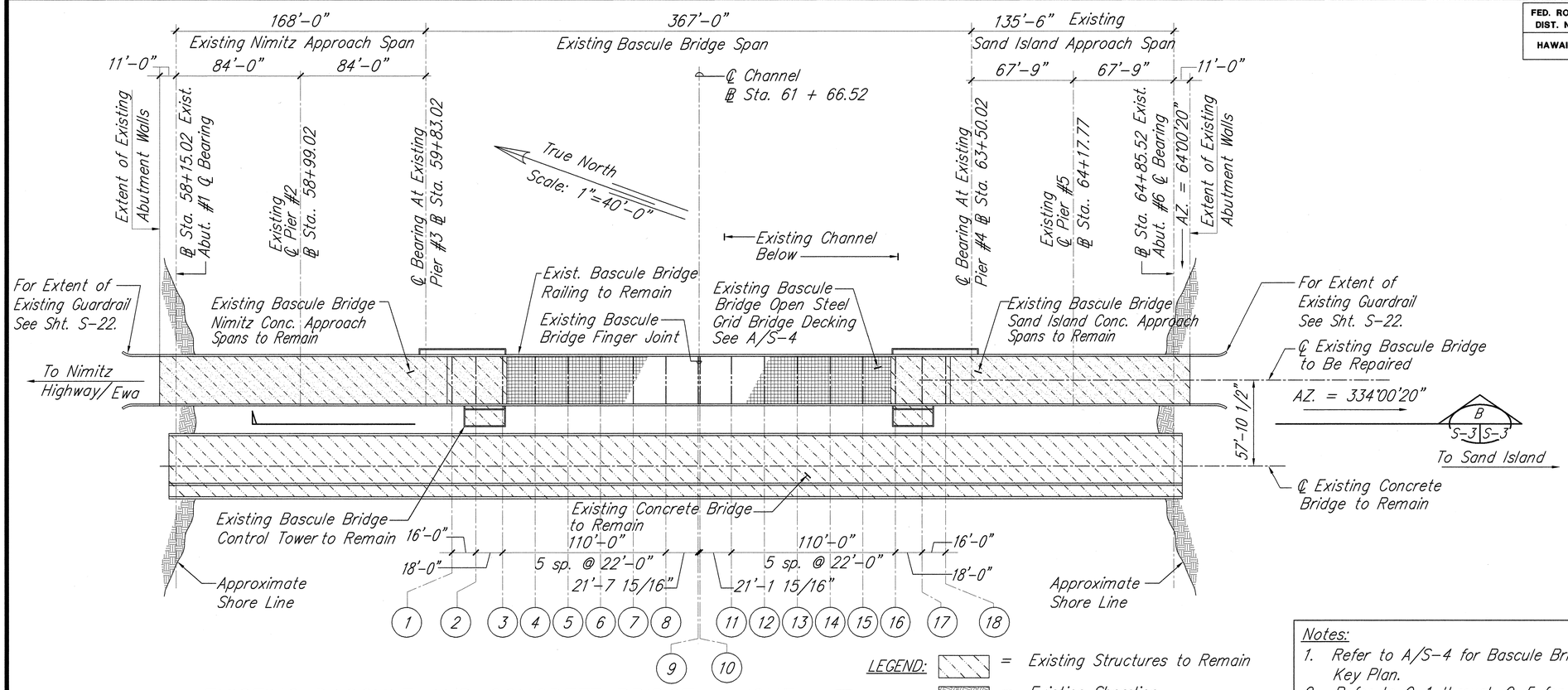

LEGEND: = Existing Structures to Remain
= Existing Shoreline

EXISTING BASCULE AND CONCRETE BRIDGE LAYOUT

A S-3 S-3

SCALE: 1" = 40'-0"

Notes:

1. Refer to A/S-4 for Bascule Bridge Removal/Replacement/Repair Key Plan.
2. Refer to C-1 through C-5 for General Notes, Water Pollution and BMP Notes, Signs and Marking Notes, Traffic Control/Contra-Flow Plan and Final Striping Plan.
3. The Contractors Attention is Directed to Special Provisions Section 695- "Removal and Disposal of Lead-Containing/ Lead-Based Paint", for a Partial list of Environmental, Legal, and Administration Requirements.

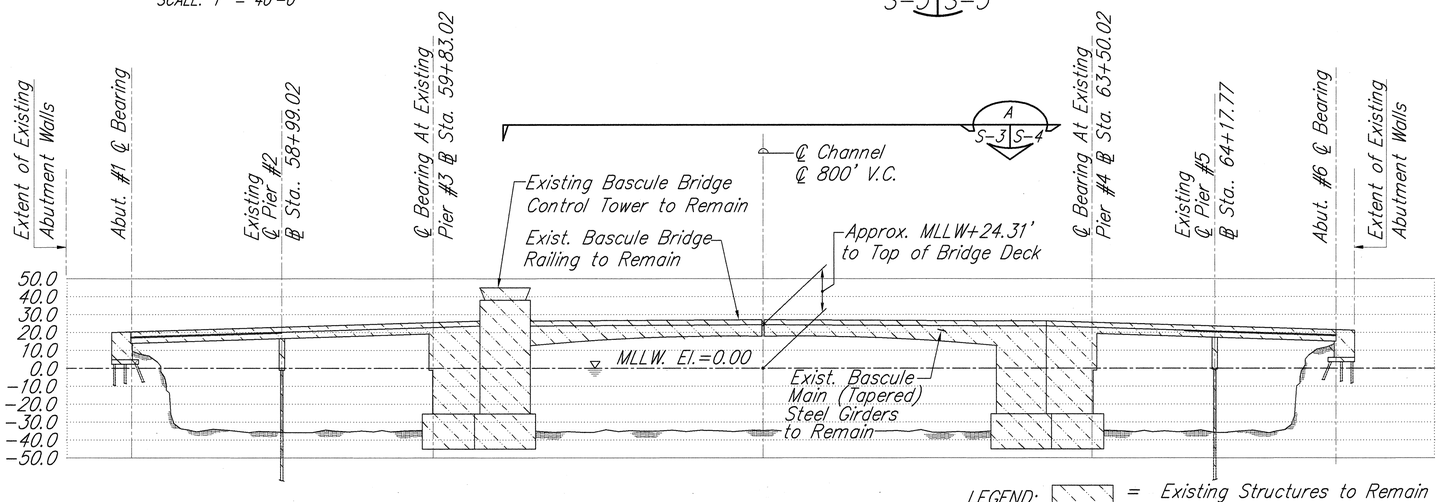

LEGEND: = Existing Structures to Remain

EXISTING BASCULE BRIDGE ELEVATION

B S-11 S-3

S-3, S-4

SCALE: 1" = 40'-0"

40' 20' 0 40' 80'

SCALE: 1"= 40'

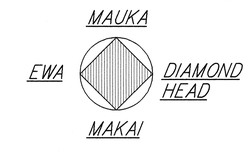

ORIGINAL PLAN	SURVEY PLOTTED BY		DATE
	DRAWN BY	"	"
NOTE BOOK	TRACED BY	"	" 11/02
	DESIGNED BY	S. WILLIAMS	" 11/02
No.	QUANTITIES BY	S. WILLIAMS	" 11/02
	CHECKED BY	E. KALANI	" 11/02

STEWART N. WILLIAMS LICENSED PROFESSIONAL ENGINEER No. 3908-S HAWAII, U.S.A.

THIS WORK WAS PREPARED BY ME OR UNDER MY SUPERVISION

Mitsunaga & Associates, Inc.

Structural Review By

STATE OF HAWAII
DEPARTMENT OF TRANSPORTATION
HIGHWAYS DIVISION

EXISTING BASCULE AND CONCRETE BRIDGE LAYOUT, EXISTING BASCULE BRIDGE ELEVATION

SAND ISLAND PARKWAY
BASCULE BRIDGE DECK REPLACEMENT
DISTRICT OF HONOLULU
Federal Aid Project No. NH-064-1(8)

Scale: As Noted NOVEMBER 2002

SHEET No. S-3 OF 37 SHEETS

FED. ROAD DIST. NO.	STATE	FED. AID PROJ. NO.	FISCAL YEAR	SHEET NO.	TOTAL SHEETS
HAWAII	HAW.	NH-064-1(8)	2002	12	45

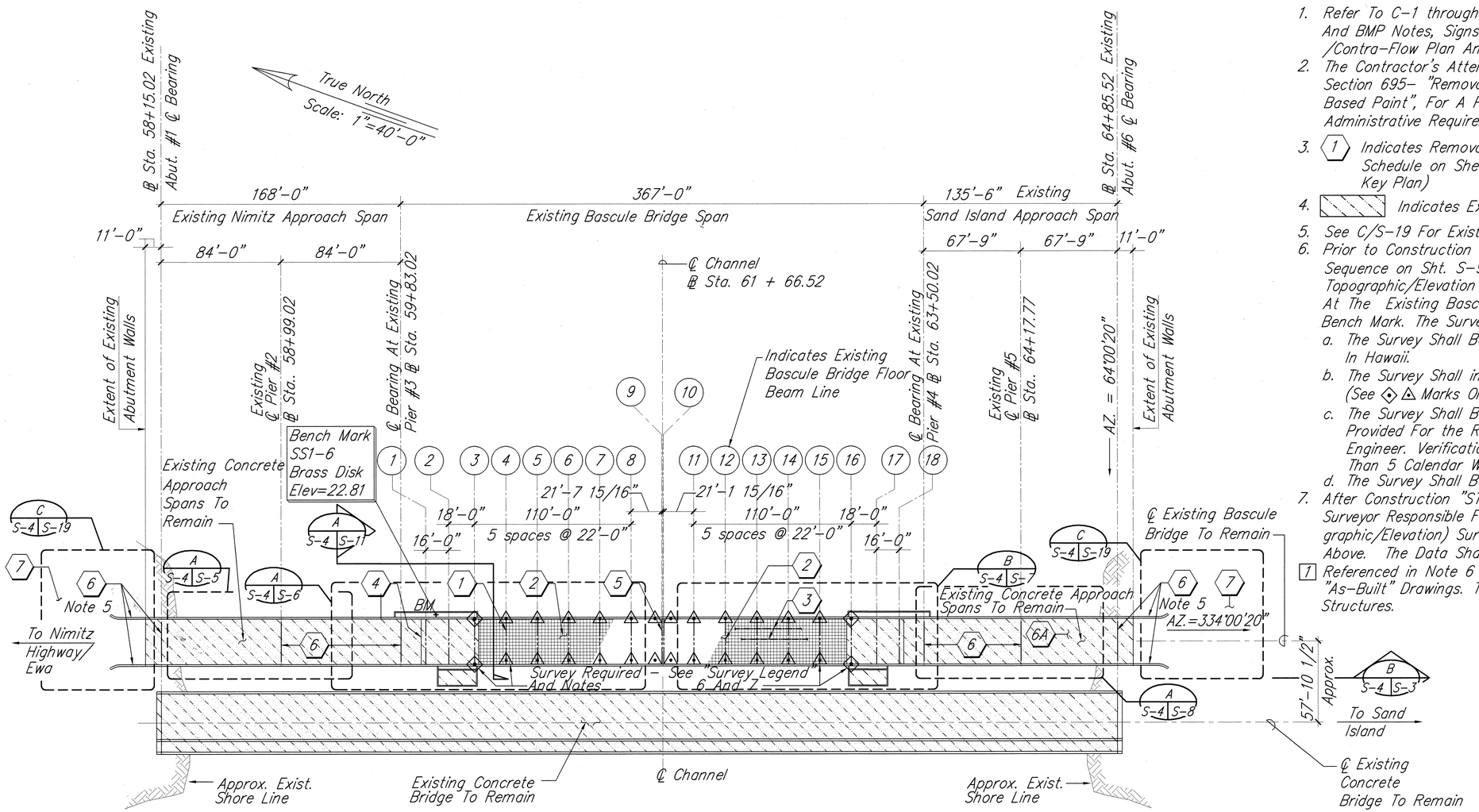

NOTES:

1. Refer To C-1 through C-5 For General Notes, Water Pollution And BMP Notes, Signs And Marking Notes, Traffic Control/ /Contra-Flow Plan And Final Striping Plan.
2. The Contractor's Attention Is Directed To Special Provisions Section 695- "Removal And Disposal Of Lead-Containing/Lead-Based Paint", For A Partial List Of Environmental, Legal, and Administrative Requirements.
3. (1) Indicates Removal/Replacement/Repair Work Mark. See Schedule on Sheet S-10 (See S-29 for Bridge Painting Key Plan)
4. Indicates Existing Structures To Remain
5. See C/S-19 For Existing And New Rail/Endpost Foundations
6. Prior to Construction "STAGE I" (See Construction Sequence on Sht. S-9); The Contractor Shall Provide A Topographic/Elevation Survey Of a Minimum of 28 locations At The Existing Bascule Bridge Span. See Survey Legend for Bench Mark. The Survey Shall Be Incidental To Steel Structures.
   a. The Survey Shall Be By A Surveyor Licensed To Practice In Hawaii.
   b. The Survey Shall include a minimum of 28 locations (See ◇ △ Marks On This Sheet-See "Legend" On this sheet).
   c. The Survey Shall Be Presented On A 22"x34" Plan And Provided For the Review, Verification and Approval By The Engineer. Verification and Approval Shall Require Not More Than 5 Calendar Weeks.
   d. The Survey Shall Be Prior To Any Removal Work.
7. After Construction "STAGE III" And Prior To Traffic, The Surveyor Responsible For Item 6 Above, Shall Provide A (Topographic/Elevation) Survey Of The Same Locations Documented Above. The Data Shall Be Added To The Survey Plan [1] Referenced in Note 6 Above, and Shall Be Included with "As-Built" Drawings. The Survey Shall Be Incidental To Steel Structures.

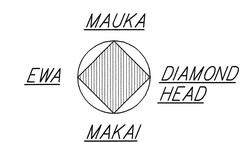

Survey Legend: (Refer To Notes 6 And 7 Above/Construction Sequence (S-9) STAGE II And STAGE III)

◇ = Existing And "Post-Replacement" Top Of Existing Concrete Deck Slab Elevation At Grid Lines (3) And (16) At Approximately 4 1/2" Inside The Face Of Concrete Bridge Railing.

△ = Existing And "Post-Replacement" Top Of Existing W14x30 Along Grid Lines (A1) And (H2) At Approximately 4 1/2" Inside The Inside Face Of Steel Bridge Railing.

BM+ = Benchmark Reference: Note that Existing Elevations Shown are per FAP BR-064-1(3), 1991.

LEGEND: = Existing Structures to Remain

= Existing Open-Grid Steel Bridge Deck to be Removed/Replaced

EXISTING BASCULE BRIDGE REMOVAL/REPLACEMENT/REPAIR KEY PLAN

SCALE: 1" = 40'-0" (See S-29 for Bridge Painting Key Plan)

A S-4 | S-4

S-3, S-11

40' 20' 0 40' 80'

SCALE: 1"= 40'

DATE	REVISION
1/07/03	1 Clarified Note 7.

STATE OF HAWAII
DEPARTMENT OF TRANSPORTATION
HIGHWAYS DIVISION

EXISTING BASCULE BRIDGE REMOVAL/ REPLACEMENT/REPAIR KEY PLAN
SAND ISLAND PARKWAY
BASCULE BRIDGE DECK REPLACEMENT
DISTRICT OF HONOLULU
Federal Aid Project No. NH-064-1(8)

Scale: As Noted NOVEMBER 2002

STEWART N. WILLIAMS LICENSED PROFESSIONAL ENGINEER No. 3908-S HAWAII, U.S.A. Exp Date 4/30/04

THIS WORK WAS PREPARED BY ME OR UNDER MY SUPERVISION.

1/20/03

Mitsunaga & Associates, Inc.

KK

Structural Review By

ORIGINAL PLAN		DATE
SURVEY PLOTTED BY		
DRAWN BY		"
TRACED BY		"
DESIGNED BY	S. WILLIAMS	11/02
QUANTITIES BY	S. WILLIAMS	11/02
CHECKED BY	K. KALANI	11/02
NOTE BOOK No.		

SHEET No. S-4 OF 37 SHEETS

ADD 12

FED. ROAD DIST. NO.	STATE	FED. AID PROJ. NO.	FISCAL YEAR	SHEET NO.	TOTAL SHEETS
HAWAII	HAW.	NH-064-1(8)	2002	13	45

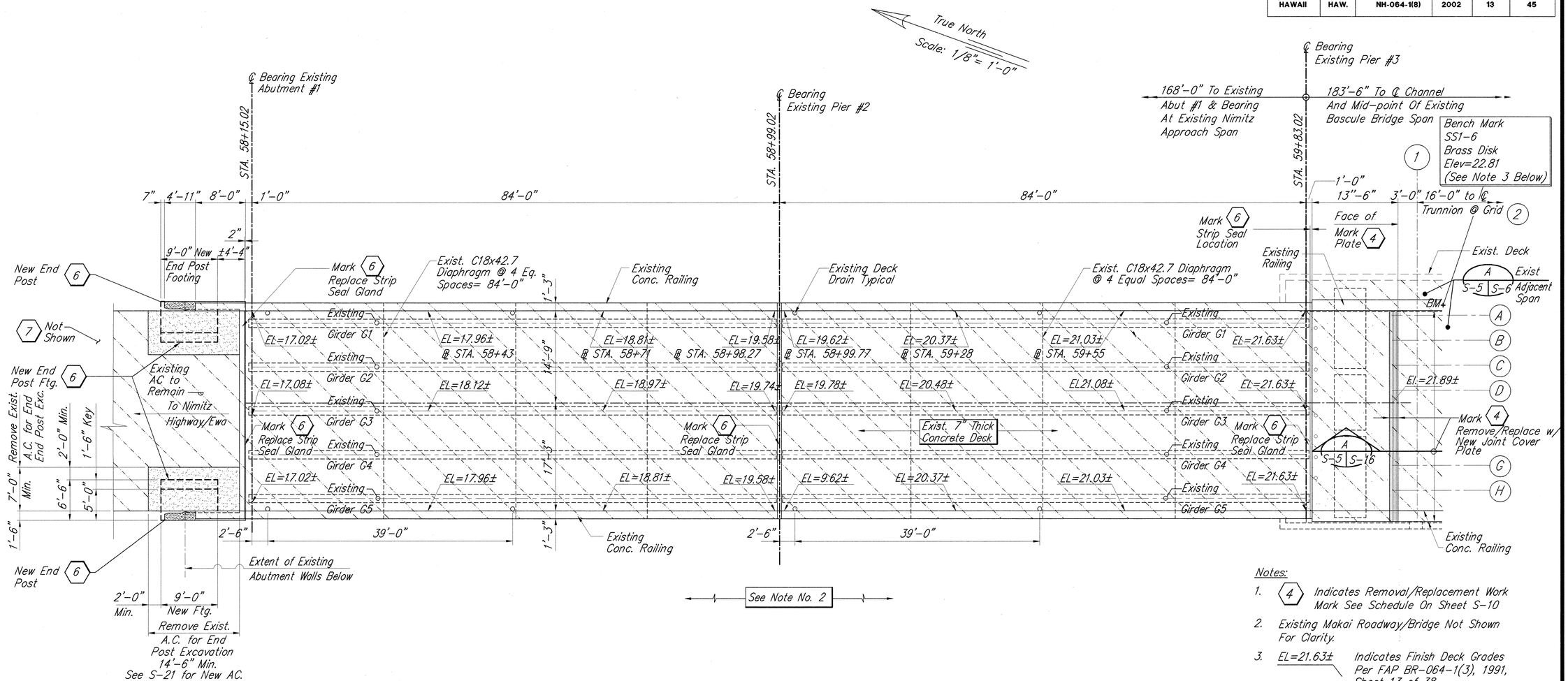

EXISTING NIMITZ APPROACH LAYOUT PLAN

SCALE : 1/8" = 1'-0"

S-4 S-5 S-6

Notes:

1. (4) Indicates Removal/Replacement Work Mark See Schedule On Sheet S-10
2. Existing Makai Roadway/Bridge Not Shown For Clarity.
3. EL=21.63± Indicates Finish Deck Grades Per FAP BR-064-1(3), 1991, Sheet 13 of 38. (See Plan for BM+ at Grid (1), (A))
4. Existing Structures To Remain
5. All Exposed Structural Steel including Existing Bridge Steel Rails, Existing Steel Girders G1, G2, G3, G4 and G5; Existing Steel C18x42.7 Diaphragms and Exposed Bearing Plates, Shall be Painted Per S-9 STAGE V and S-29.

MAUKA
EWA DIAMOND HEAD
MAKAI

8 6 4 2 0 8 16
SCALE: 1/8"= 1'-0"

STEWART N. WILLIAMS LICENSED PROFESSIONAL ENGINEER No. 3908-S HAWAII, U.S.A.

THIS WORK WAS PREPARED BY ME OR UNDER MY SUPERVISION.

Mitsunaga & Associates, Inc.

Structural Review By

STATE OF HAWAII
DEPARTMENT OF TRANSPORTATION
HIGHWAYS DIVISION

EXISTING NIMITZ APPROACH LAYOUT PLAN
SAND ISLAND PARKWAY
BASCULE BRIDGE DECK REPLACEMENT
DISTRICT OF HONOLULU
Federal Aid Project No. NH-064-1(8)

Scale: As Noted NOVEMBER 2002

SHEET No. S-5 OF 37 SHEETS

ORIGINAL PLAN	SURVEY PLOTTED BY	DATE
	DRAWN BY	" "
NOTE BOOK	TRACED BY	" " 11/02
	DESIGNED BY S. WILLIAMS	" " 11/02
	QUANTITIES BY S. WILLIAMS	" " 11/02
No.	CHECKED BY K. SIAMS	" " 11/02

FED. ROAD DIST. NO.	STATE	FED. AID PROJ. NO.	FISCAL YEAR	SHEET NO.	TOTAL SHEETS
HAWAII	HAW.	NH-064-1(8)	2002	14	45

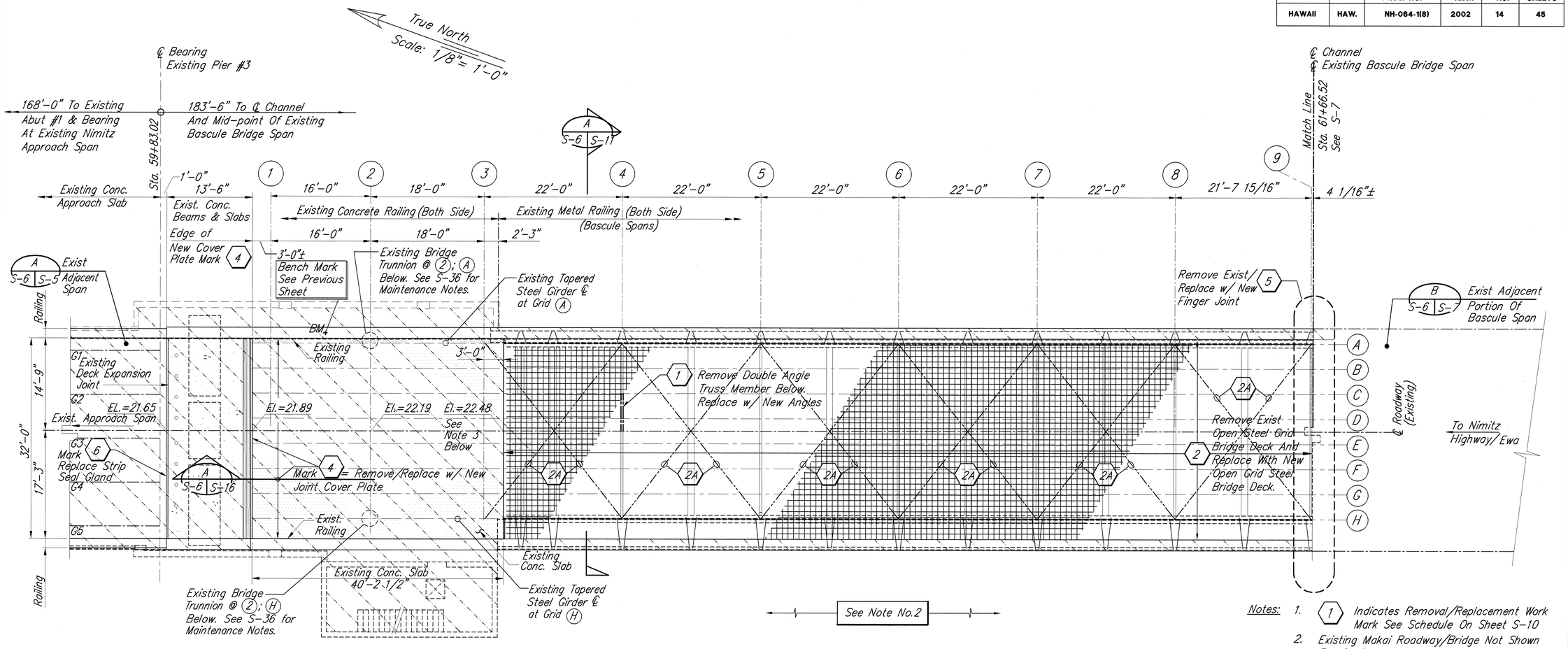

PARTIAL EXISTING BASCULE BRIDGE LAYOUT PLAN – NORTH LEAF

SCALE : 1/8" = 1'-0"

A S-6 | S-6

S-4, S-5, S-7

Notes:

1. 1 Indicates Removal/Replacement Work Mark See Schedule On Sheet S-10
2. Existing Makai Roadway/Bridge Not Shown For Clarity.
3. New Open Grid Steel Bridge Deck Shall Match Existing Deck Elevations At Grid 3 +3'-0". (Prior To Construction, Contractor Shall Review Existing Deck Elevation Survey to Confirm existing Elevation = 22.48 and Existing Cross Slope = 0% – At grid 3 + 3'-0". Notify Structural Engineer if any discrepancies are found).
4. Existing Structures To Remain

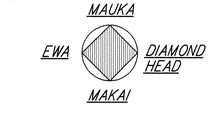

8 6 4 2 0 8 16

SCALE: 1/8"= 1'-0"

STEWART N. WILLIAMS LICENSED PROFESSIONAL ENGINEER No. 3908-S HAWAII, USA

THIS WORK WAS PREPARED BY ME OR UNDER MY SUPERVISION.

Mitsunaga & Associates, Inc.

Structural Review By

STATE OF HAWAII
DEPARTMENT OF TRANSPORTATION
HIGHWAYS DIVISION

PARTIAL EXISTING BASCULE BRIDGE LAYOUT PLAN – NORTH LEAF
SAND ISLAND PARKWAY
BASCULE BRIDGE DECK REPLACEMENT
DISTRICT OF HONOLULU
Federal Aid Project No. NH-064-1(8)

Scale: As Noted NOVEMBER 2002

SHEET No. S-6 OF 37 SHEETS

ORIGINAL PLAN		
	SURVEY PLOTTED BY	DATE
	SURVEY CHECKED BY	" "
NOTE BOOK	TRACED BY S. WILLIAMS	" " 11/02
	DESIGNED BY S. WILLIAMS	" " 11/02
No.	QUANTITIES BY S. WILLIAMS	" " 11/02
	CHECKED BY K. KALANE	" " 11/02

FED. ROAD DIST. NO.	STATE	FED. AID PROJ. NO.	FISCAL YEAR	SHEET NO.	TOTAL SHEETS
HAWAII	HAW.	NH-064-1(8)	2002	15	45

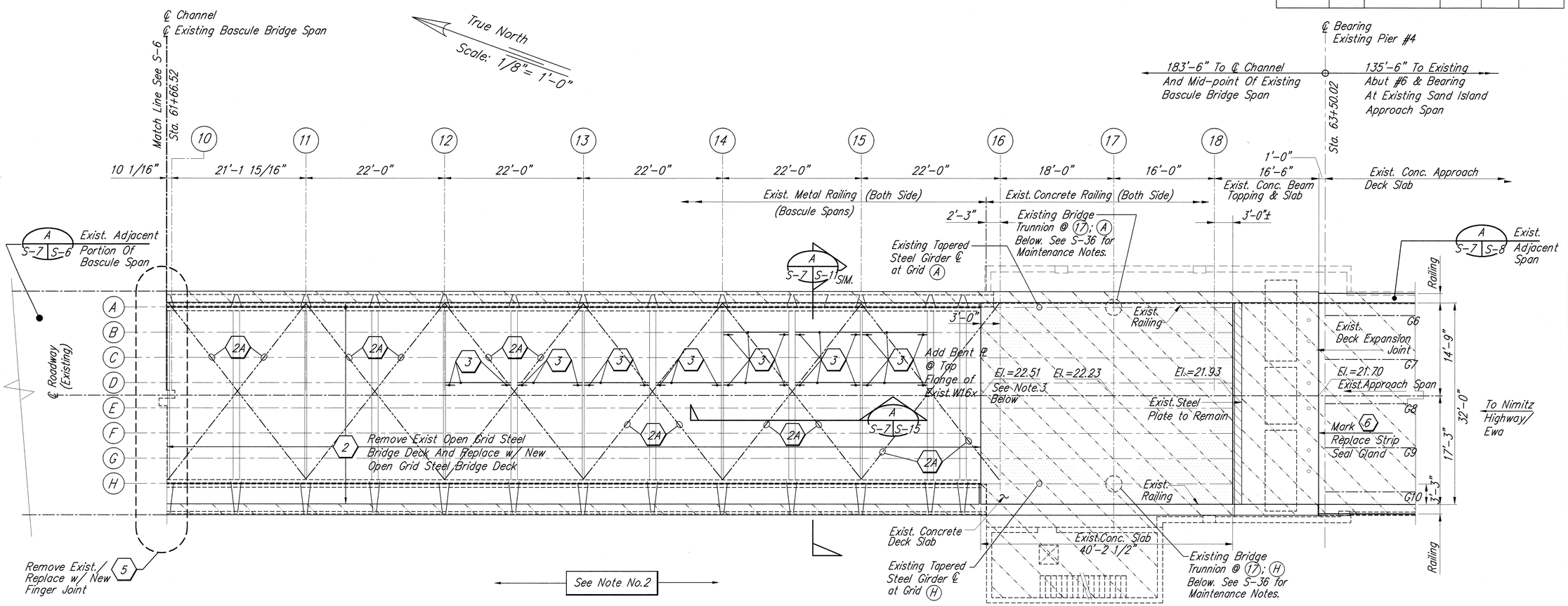

PARTIAL EXISTING BASCULE BRIDGE LAYOUT PLAN – SOUTH LEAF

SCALE : 1/8" = 1'-0"

B S-7 | S-7

S-4, S-6

Notes:

1. (1) Indicates Removal/Replacement Work Mark See Schedule On Sheet S-10
2. Existing Makai Roadway/Bridge Not Shown For Clarity.
3. New Open Grid Steel Bridge Deck Shall Match Existing Deck Elevations At Grid (16) Less 3'-0". (Prior To Construction, Contractor Shall Review Existing Deck Elevation Survey to Confirm Existing Elevation = 22.15 and Existing Cross Slope = 0% – At Grid (16) Less 3'-0". Notify Structural Engineer if any discrepancies are found).
4. Existing Structures To Remain

MAUKA
EWA
DIAMOND HEAD
MAKAI

8 6 4 2 0 8 16
SCALE: 1/8"= 1'-0"

STEWART N. WILLIAMS
LICENSED PROFESSIONAL ENGINEER
No. 3908-S
HAWAII, U.S.A.

THIS WORK WAS PREPARED BY ME OR UNDER MY SUPERVISION.

Mitsunaga & Associates, Inc.

Structural Review By

STATE OF HAWAII
DEPARTMENT OF TRANSPORTATION
HIGHWAYS DIVISION

PARTIAL EXISTING BASCULE BRIDGE LAYOUT PLAN – SOUTH LEAF

SAND ISLAND PARKWAY
BASCULE BRIDGE DECK REPLACEMENT
DISTRICT OF HONOLULU
Federal Aid Project No. NH-064-1(8)

Scale: As Noted NOVEMBER 2002

SHEET No. S-7 OF 37 SHEETS

ORIGINAL PLAN		
	SURVEY PLOTTED BY	DATE
	DRAWN BY	
	TRACED BY	11/02
NOTE BOOK	DESIGNED BY S. WILLIAMS	11/02
	QUANTITIES BY S. WILLIAMS	11/02
No.	CHECKED BY K. KALANI	11/02

FED. ROAD DIST. NO.	STATE	FED. AID PROJ. NO.	FISCAL YEAR	SHEET NO.	TOTAL SHEETS
HAWAII	HAW.	NH-064-1(8)	2002	16	45

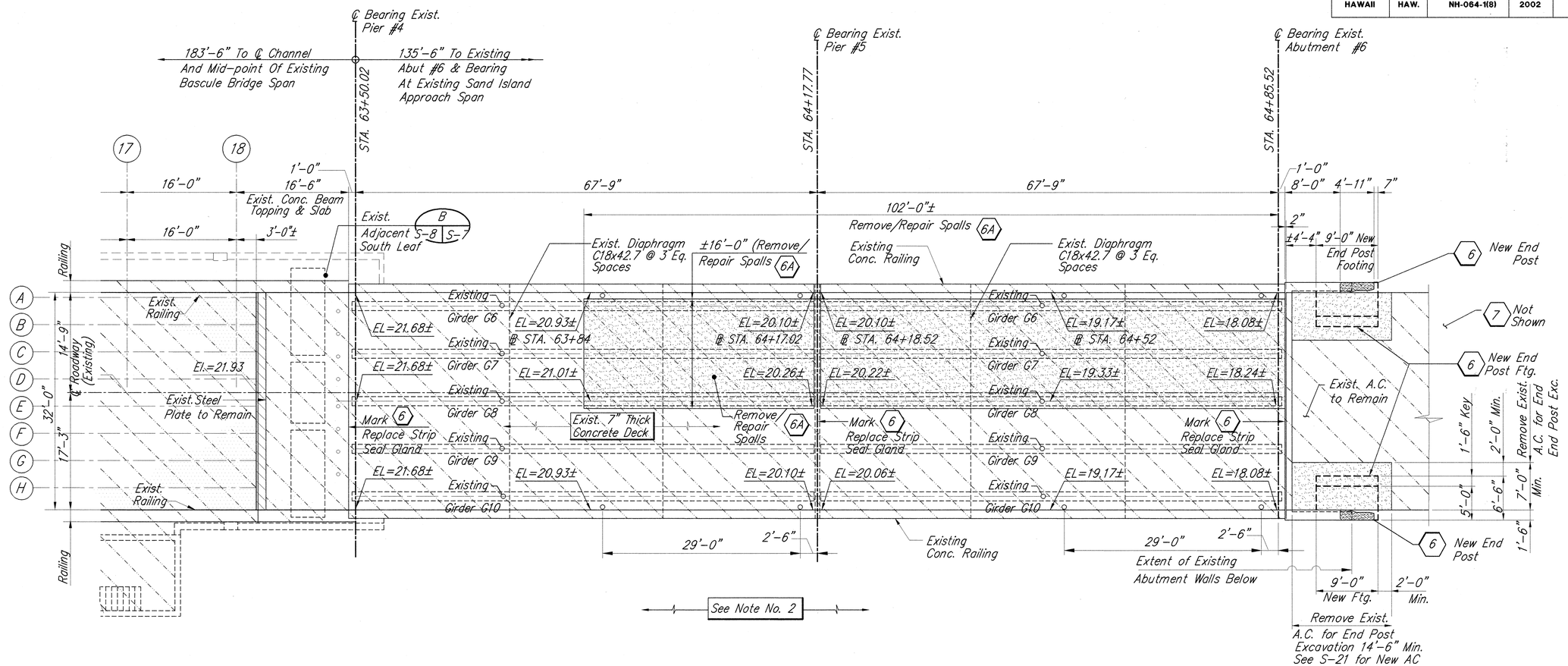

EXISTING NIMITZ APPROACH LAYOUT PLAN

SCALE : 1/8" = 1'-0"

A
S-8 | S-8
S-4, S-7

Notes:

1. 6 Indicates Removal/Replacement Work Mark –See Schedule On Sheet S-10
2. Existing Makai Roadway/Bridge Not Shown for Clarity.
3. EL=21.68± Indicates Finish Deck Grades Per FAP BR-064-1(3), 1991, Sheet 13 of 38. (See Plan at S-5 for BM+ at Grid 1 ; A)
4. Existing Structures To Remain
5. All Exposed Structural Steel including Existing Bridge Steel Rails, Existing Steel Girders G6, G7, G8, G9 and G10; Existing Steel C18x42.7 Diaphragms and Exposed Bearing Plates, Shall be Painted Per S-9 STAGE V and Sheet S-29.

MAUKA
EWA
DIAMOND HEAD
MAKAI

8 6 4 2 0 8 16
SCALE: 1/8"= 1'-0"

STEWART N. WILLIAMS
LICENSED PROFESSIONAL ENGINEER
No. 3908-S
HAWAII, U.S.A.

THIS WORK WAS PREPARED BY ME OR UNDER MY SUPERVISION.

Mitsunaga & Associates, Inc.

Structural Review By

STATE OF HAWAII
DEPARTMENT OF TRANSPORTATION
HIGHWAYS DIVISION

EXISTING SAND ISLAND APPROACH LAYOUT PLAN

SAND ISLAND PARKWAY
BASCULE BRIDGE DECK REPLACEMENT
DISTRICT OF HONOLULU
Federal Aid Project No. NH-064-1(8)

Scale: As Noted NOVEMBER 2002

SHEET No. S-8 OF 37 SHEETS

ORIGINAL PLAN		DATE
	SURVEY PLOTTED BY	
	DRAWN BY	
NOTE BOOK	TRACED BY	" 11/02
	DESIGNED BY S. WILLIAMS	" 11/02
	QUANTITIES BY S. WILLIAMS	" 11/02
No.	CHECKED BY K. NAGAMI	" 11/02

FED. ROAD DIST. NO.	STATE	FED. AID PROJ. NO.	FISCAL YEAR	SHEET NO.	TOTAL SHEETS
HAWAII	HAW.	NH-064-1(8)	2002	17	45

CONSTRUCTION SEQUENCE

STAGE	DESCRIPTION	REMOVAL/REPLACEMENT MARKS	REMARKS	REFERENCE SHEETS
STAGE I	After Receipt Of Necessary Permits And Approvals (See Remarks), Provide Traffic Control Measures And Required Scaffolding (Underslung Scaffolding is Anticipated/ Required – In Order To Prevent Debris And Other Waste From Contaminating The Channel /Waterway And To Provide Fall Protection). Due To Potential Lead Abatement Requirements, The Contractor Shall Provide any Containment Measures Which May be Required.		Prior To Stage I, 1. The Contractor Shall Comply With Permitting, BMP And Other Requirements Of The Project Specifications And Special Provisions And As Required By The Drawings. 2. The Contractor Shall Provide a Topographic/ Elevation Survey of Locations at The Existing Bascule Bridge Span and as Indicated on Sheet S-4.	C-1 through C-5, S-4.
STAGE II	Test For Lead Content/Determine Lead Abatement Procedures In Accordance with Project Specifications. Submit Proposed Procedures For Review And Approval By The Engineer-Prior to Any Removal Work.	Refer To Marks 1, 2, 3, 4, & 5	Containment (By Negatively Pressurized Enviro-mental/Enclosure/Curtains) is Required for Removal/Blasting/Cleaning of Lead Containing Painted Steel Materials –See General Structural Notes Section VIII.	
STAGE III	A.) Remove Existing and Replace Mark 1 Angles at Grid 4. B.) Remove Existing And Replace With New Open Grid Steel Bridge Deck-In Accordance w/ Mark 2 And "Remarks" C.) After Removable and Prior to Replacement with New Open-Grid Steel Bridge Deck- Add New Top Chord Diagonal Bracing Per Mark 2A D.) Mark 3 Shall Be Accomplished Where Coincident w/ Mark 2 Replacements. E.) Finger Joint Replacement Mark 5 May Require Removal of Deck Portions Greater Than 22'-0" In Width (Width Measured Parallel With Direction of Traffic). The Contractor Shall Brace Portions of the Bascule Bridge, Each Side of the Finger Joint, Prior To Proceeding With The Work. Submit Bracing Plans For Approval Prior To The Work.	Refer To Marks 1, 2, 2A, & 3 Refer To Mark 5	i.) Mark 2 Removal Shall Be Limited To One Portion Of Deck No Larger Than 22'-0" Width At Any Time. For Numbers Of Portions Or Size Of Portion Greater Than The Above, The Contractor Shall Provide Bracing Measures For Approval Prior To The Work. Replacement Shall Be Completed At the Above Portion-Prior to Further Work. ii.) Removal And Welding Debris Shall Be Contained Within/Collected Upon-The Above STAGE I (Scaffolding) Measures; or Potential STAGE II (Containment) Measures. iii.) In Order to Prevent/Limit Steel Corrosion, all Weld Touch-Up Required By The Specifications And Drawings-Shall Be Made Within One Hour Of Completion of the Field Weld, Unless Otherwise Approved by the Engineer.	i.) Refer to S-1 for Index to Drawings ii) Mark 1 -See S-11 iii) Mark 2 -See S-12 iv) Mark 2A -See S-13, S-14 v) Mark 3 -See S-15 vi) Mark 5 -See S-18
STAGE IV	Marks 4, 6, 6A and 7 May Be Scheduled To Satisfy Contractor Requirements.	Refer To Marks 4, 6, 6A, & 7		i) Mark 4 -See S-16, S-17 ii) Mark 6 6A -See S-19, S-20, S-21 iii) Mark 7 -See S-22
STAGE V	Paint Structural Steel	See – on S-10	i.) See Reference Drawings Shts. for Existing Structural Steel Size, Location. ii.) See Specifications for Painting Requirements. iii.) Provide Containment for Painting. See General Structural Notes Section IX 1 iv.) Mark 2 Open Grid Steel Deck is Not Scheduled for Painting. Protect the New Deck From Over-Spray to the Greatest Extent Possible. 1 v.) Existing Steel Grating at Existing Catwalk is not Scheduled for Cleaning and Painting. Protect per iv above. See Note 4 at Sheet S-34, and Note 3 at Sheet S-35. 1 vi.) Do Not Clean and Paint Abandoned Motor. See Note 4 at Sheet S-35.	S-29 through S-37

Notes to Construction Sequences:

1. See Sheet S-10 for Removal/Replacement Marks.

ORIGINAL PLAN	SURVEY PLOTTED BY	DATE
	DRAWN BY	" " " "
NOTE BOOK	TRACED BY	11/02
	DESIGNED BY S. WILLIAMS	11/02
	QUANTITIES BY S. WILLIAMS	11/02
No.	CHECKED BY K. TAKANO	11/02

STEWART N. WILLIAMS LICENSED PROFESSIONAL ENGINEER No. 3908-S HAWAII, U.S.A.

Exp Date 4/30/04

THIS WORK WAS PREPARED BY ME OR UNDER MY SUPERVISION

1/16/03

Mitsunaga & Associates, Inc.

KK

Structural Review By

DATE	REVISIONS
1/07/03	1 Added Stage V Notes

STATE OF HAWAII
DEPARTMENT OF TRANSPORTATION
HIGHWAYS DIVISION

CONSTRUCTION SEQUENCE

SAND ISLAND PARKWAY
BASCULE BRIDGE DECK REPLACEMENT
DISTRICT OF HONOLULU
Federal Aid Project No. NH-064-1(8)

Scale: As Noted NOVEMBER 2002

SHEET No. S-9 OF 37 SHEETS

ADD 17

FED. ROAD DIST. NO.	STATE	FED. AID PROJ. NO.	FISCAL YEAR	SHEET NO.	TOTAL SHEETS
HAWAII	HAW.	NH-064-1(8)	2002	18	45

REMOVAL / REPLACEMENT SCHEDULE

MARK	DESCRIPTION	REFERENCE	REMARKS
1	Replace Double Angle Full Length At Grid Line 4. See Note No.2 on S-4 Regarding Lead Containing Paint	Sheet S-11	See "Construction Sequence" STAGE III.
2	Remove Existing Open Grid Steel Bridge Deck And Replace With New Open Grid Steel Bridge Deck. See Sheets S-5, S-6, S-7 and S-8 For Partial Framing Plans. See Note No. 2 on Sht. S-4 Regarding Lead-Containing Paint.	Sheet S-12 and 1/S-13.	•See "Construction Sequence" For Removal Criteria/STAGE II And III. •See Details and Special Provisions 648 -Skid Resistance System for Welded Anti-Skid Stud System. •The New Open Grid Steel Bridge Deck is Not Scheduled for Painting. All Anti-Skid Studs, Marker Plates, Etc. Shall Be Shop Fabricated Prior to Galvanizing. 2
2A	Add Top Chord Diagonal Bracing	Shts. S-13, S-14	See "Construction Sequence" STAGE III. See "Bracing Erection Notes" at A/S-13. 1
3	Add Bent Plates 1/4"x6x4x10'-0" and 10'-3 1/2" (See Sheet S-15) At Mauka/North Side Of Existing W16x Steel Beams Where Shown. Add Opposing Bent Plates 1/4"x6x4x1'-6" At Makai/South Side Of Existing W16x Steel Beams, Adjacent W16x Bearing Locations And Each Side Of Existing C12x Diaphragms Where Shown. See Notes No. 2 On S-4 Regarding Lead-Containing Paint.	Sheet S-15	See "Construction Sequence" STAGE III.
4	Replace Joint Cover Plate At Nimitz Highway Approach. See Note No.2 On S-4 Regarding Lead-Containing Paint.	Sheet S-16	See "Construction Sequence" STAGE IV Provide Anti-Skid Studs Per Special Provisions Section 648.
5	Replace Finger Joint	Sheets S-17, S-18	See "Construction Sequence" STAGE III Provide Anti-Skid Studs Per Special Provisions Section 648.
6 6A	Repair Portions of Conc. Deck Slab, Replace Concrete Endposts, Endpost Footings, Strip Seal Glands and Thrie Beam Transitions.	Sheets S-19 to S-21	See "Construction Sequence" STAGE IV
7	Replace End Treatments	Sheets S-22 to S-28	See "Construction Sequence" STAGE IV.
-	Structural Steel Painting	Sheets S-29 to S-37	See "Construction Sequence" STAGE V. See S-36 for Bridge Trunnion Bearings Maintenance Notes.

DATE	REVISIONS
1/07/03	2 Added Reference Note at Mark 2
1/07/03	1 Added Reference Note at Mark 2A

STATE OF HAWAII
DEPARTMENT OF TRANSPORTATION
HIGHWAYS DIVISION

REMOVAL/REPLACEMENT SCHEDULE

SAND ISLAND PARKWAY
BASCULE BRIDGE DECK REPLACEMENT
DISTRICT OF HONOLULU
Federal Aid Project No. NH-064-1(8)

Scale: As Noted NOVEMBER 2002

STEWART N. WILLIAMS
LICENSED PROFESSIONAL ENGINEER
No. 3908-S
HAWAII, U.S.A.
Exp Date 4/30/04

THIS WORK WAS PREPARED BY ME OR UNDER MY SUPERVISION.
1/14/03
Mitsunaga & Associates, Inc.

KK
Structural Review By

ORIGINAL PLAN	SURVEY PLOTTED BY	DATE
	DRAWN BY	"
NOTE BOOK	TRACED BY S. WILLIAMS	" 11/02
	DESIGNED BY S. WILLIAMS	" 11/02
No.	QUANTITIES BY S. WILLIAMS	" 11/02
	CHECKED BY K. KALANI	" 11/02

ADD 18

FED. ROAD DIST. NO.	STATE	FED. AID PROJ. NO.	FISCAL YEAR	SHEET NO.	TOTAL SHEETS
HAWAII	HAW.	NH-064-1(8)	2002	19	45

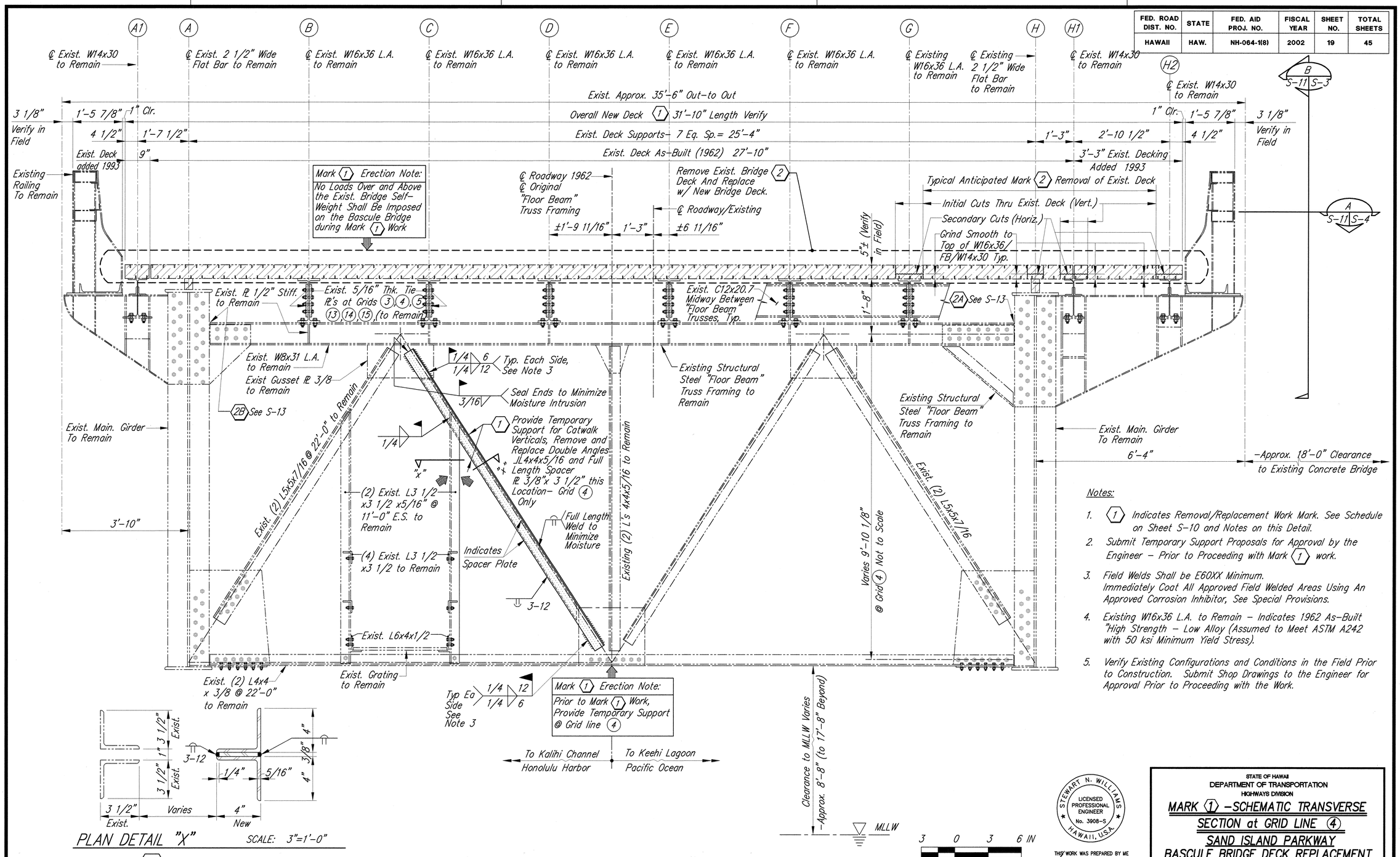

Notes:

1. (1) Indicates Removal/Replacement Work Mark. See Schedule on Sheet S-10 and Notes on this Detail.
2. Submit Temporary Support Proposals for Approval by the Engineer – Prior to Proceeding with Mark (1) work.
3. Field Welds Shall be E60XX Minimum. Immediately Coat All Approved Field Welded Areas Using An Approved Corrosion Inhibitor, See Special Provisions.
4. Existing W16x36 L.A. to Remain – Indicates 1962 As-Built "High Strength – Low Alloy (Assumed to Meet ASTM A242 with 50 ksi Minimum Yield Stress).
5. Verify Existing Configurations and Conditions in the Field Prior to Construction. Submit Shop Drawings to the Engineer for Approval Prior to Proceeding with the Work.

ORIGINAL PLAN	SURVEY PLOTTED BY	DATE
	DRAWN BY	" " 11/02
NOTE BOOK	TRACED BY S. WILLIAMS	" " 11/02
	DESIGNED BY S. WILLIAMS	" " 11/02
No.	QUANTITIES BY K. KALANI	" " 11/02
	CHECKED BY	

STEWART N. WILLIAMS LICENSED PROFESSIONAL ENGINEER No. 3908-S HAWAII, U.S.A.

THIS WORK WAS PREPARED BY ME OR UNDER MY SUPERVISION

Mitsunaga & Associates, Inc.

Structural Review By

STATE OF HAWAII
DEPARTMENT OF TRANSPORTATION
HIGHWAYS DIVISION

MARK (1) -SCHEMATIC TRANSVERSE SECTION at GRID LINE (4)
SAND ISLAND PARKWAY
BASCULE BRIDGE DECK REPLACEMENT
DISTRICT OF HONOLULU
Federal Aid Project No. NH-064-1(8)

Scale: As Noted NOVEMBER 2002

SHEET No. S-11 OF 37 SHEETS

FED. ROAD DIST. NO.	STATE	FED. AID PROJ. NO.	FISCAL YEAR	SHEET NO.	TOTAL SHEETS
HAWAII	HAW.	NH-064-1(8)	2002	20	45

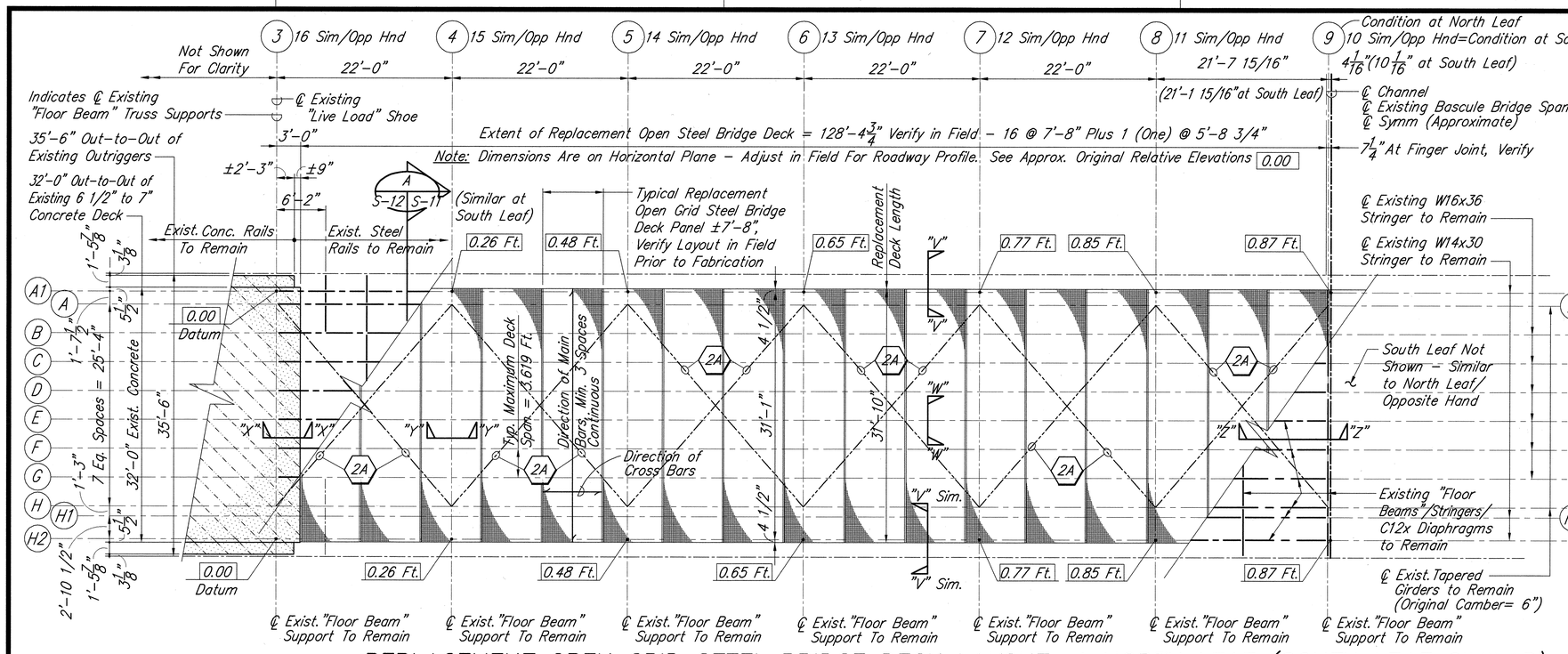

REPLACEMENT OPEN GRID STEEL BRIDGE DECK LAYOUT at NORTH LEAF (SOUTH LEAF SIMILAR)

SCALE : 1/8" = 1'-0"

Notes:

1. 2 Indicates Removal/Replacement Work Mark. See Schedule on Sheet S-10 and Notes on this Detail.
2. Submit Temporary Support Proposals for Approval by the Engineer - Prior to Proceeding with Mark 2 work.
3. Field Welds Shall be E60XX Minimum. Immediately Coat All Approved Field Welded Areas Using An Approved Corrosion Inhibitor, See Special Provisions.
4. Existing W16x36 L.A. to Remain - Indicates 1962 As-Built "High Strength" - Low Alloy (Assumed to Meet ASTM A242 with 50 ksi Minimum Yield Stress).
5. Verify Existing Configurations and Conditions in the Field Prior to Construction. Submit Shop Drawings to the Engineer for Approval Prior to Proceeding with the Work.
6. 1 See C-5 for Raised Pavement Marker Locations. See 1/S-13 for Added Marker Plates.

MAUKA / EWA / DIAMOND HEAD / MAKAI

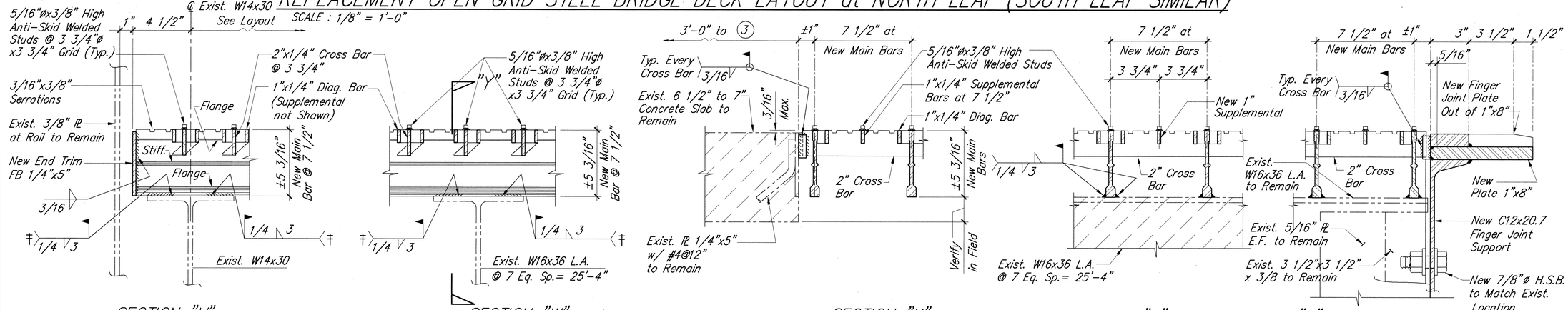

SECTION "V"
Scale: 3"= 1'-0"

SECTION "W"
Scale: 3"= 1'-0"

SECTION "X"
Scale: 3"= 1'-0"

SECTION "Y"
Scale: 3"= 1'-0"

SECTION "Z"
Scale: 3"= 1'-0"

Legend:

‡ — Typ. @ Every Main Bar and Support Intersection.

Note:

For Remainder of Configuration and Details, See "Replacement Open Grid Steel Bridge Deck Details" 1 S-12 S-13

MARK 2 - OPEN GRID STEEL BRIDGE DECK REPLACEMENT DETAILS

SCALE : As Noted

A S-12 S-12

S-4, S-6, S-7, S-9, S-10, S-11

6 4 2 0 6 IN
SCALE: 3"= 1'-0"

8 6 4 2 0 8 16
SCALE: 1/8"= 1'-0"

DATE	REVISION
1/07/03	1 Added Marker Note

STATE OF HAWAII
DEPARTMENT OF TRANSPORTATION
HIGHWAYS DIVISION

MARK 2 - OPEN GRID STEEL BRIDGE DECK REPLACEMENT DETAILS

SAND ISLAND PARKWAY BASCULE BRIDGE DECK REPLACEMENT DISTRICT OF HONOLULU

Federal Aid Project No. NH-064-1(8)

Scale: As Noted NOVEMBER 2002

STEWART N. WILLIAMS LICENSED PROFESSIONAL ENGINEER No. 3908-S HAWAII, U.S.A.

Exp. Date 4/30/04

THIS WORK WAS PREPARED BY ME OR UNDER MY SUPERVISION. 1/7/03

Mitsunaga & Associates, Inc.

Structural Review By KK

ORIGINAL PLAN			
NOTE BOOK	SURVEY PLOTTED BY		DATE
	DRAWN BY	"	
	TRACED BY	"	
	DESIGNED BY	S. WILLIAMS	11/02
	QUANTITIES BY	S. WILLIAMS	11/02
No.	CHECKED BY	K. KALANI	11/02

SHEET No. S-12 OF 37 SHEETS

ADD 20

FED. ROAD DIST. NO.	STATE	FED. AID PROJ. NO.	FISCAL YEAR	SHEET NO.	TOTAL SHEETS
HAWAII	HAW.	NH-064-1(8)	2002	21	45

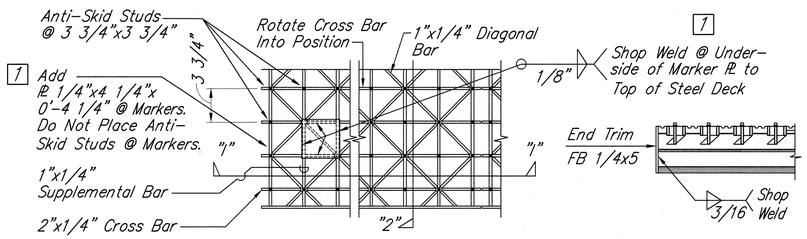

TYPICAL PLAN
Scale: 1 1/2"= 1'-0"

SECTION "2"
Scale: 1 1/2"= 1'-0"

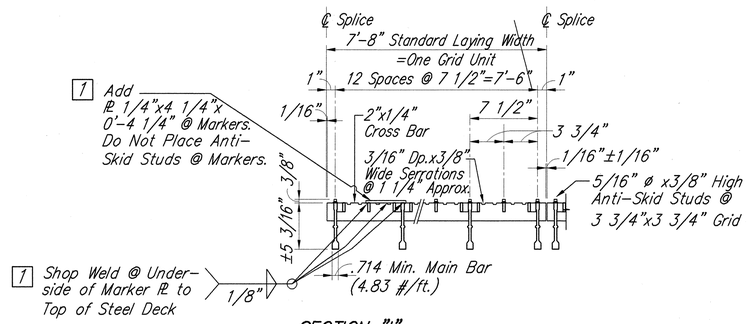

SECTION "1"
Scale: 1 1/2"= 1'-0"

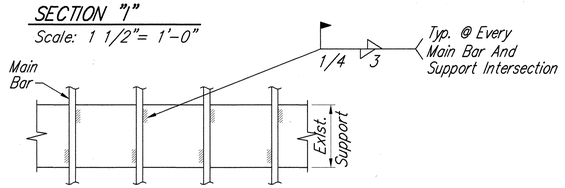

TYPICAL ATTACHMENT PLAN
Scale: 1 1/2" =1'-0"

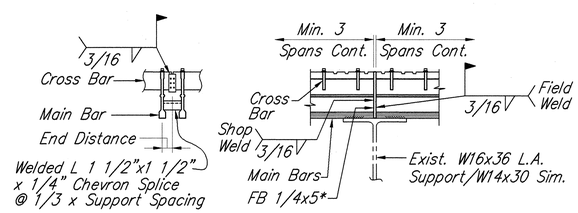

TYPICAL SIDE SPLICE
Scale: 1 1/2" =1'-0"

TYPICAL END SPLICE Scale: 1 1/2" =1'-0"
* Shall Occur AT ℄ Exist. Supports w/Min. 3 Span. Continuous Ea. Side Of Splice.

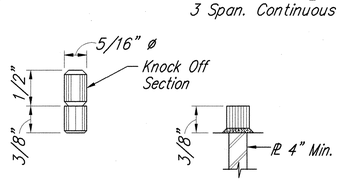

ANTI-SKID STUD DETAIL
Scale: Full

Notes:
1. Replacement Open Grid Steel Bridge Deck Shall Provide Section Modulii S_{top} = 3.268 In ³/ft. S_{bottom} = 3.196 In³/ft.
2. Approx Weight Shall Be 17.2 lbs/s.f.
3. Deck Shall Be ASTM A-36 Min. Hot Dip Galv. After Fabrication.
4. See Mark 2 Layout on S-12.
5. See Typical Plan and Section "1" for Added PL 1/4"x4 1/4"x0'-4 1/4" for Raised Pavement Markers. See C-5 for Location. Plates Shall Be Shop Fabricated.

REPLACEMENT OPEN GRID STEEL BRIDGE DECK DETAILS Scale: As Noted 1 S-12 S-13

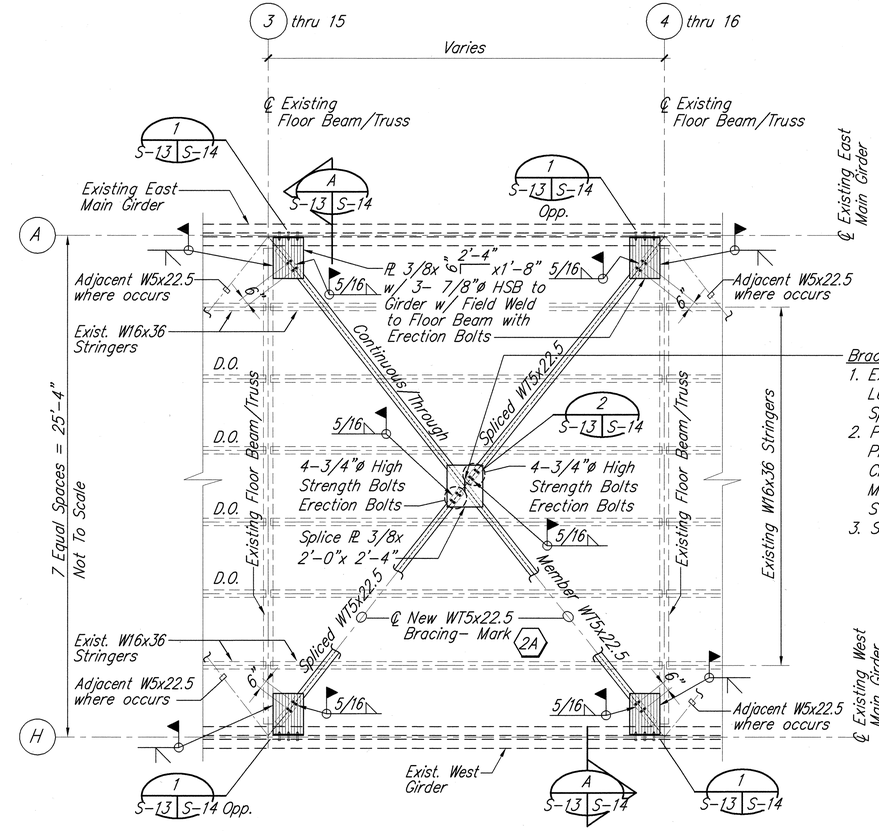

Bracing Erection Notes 2
1. Existing Vert. Hangers L4x4x5/16 Min./ L6x6x3/8 Max. Shall Be cut and Spliced with New Plates Per 2/S-14.
2. Prior to Cutting Existing Vert. Hangers, Provide Temporary Hangers for Existing Cross Bracing Below. Temporary Hangers May Be Supported from Existing W16x36 Stringers.
3. See 2/S-14 for New Splice Plates.

TYPICAL TOP CHORD BRACING LAYOUT - MARK 2A
Scale: 1/4"= 1'-0"

A S-13 S-13 S-14

DATE	REVISION
1/07/03	2 Added Bracing Erection Notes
1/07/03	1 Added Marker Plates

12 9 3 1FT
SCALE: 1 1/2"= 1'-0"
4 3 2 1 0 4 8
SCALE: 1/4"= 1'-0"

STEWART N. WILLIAMS LICENSED PROFESSIONAL ENGINEER No. 3908-S HAWAII, U.S.A.
Exp. Date 4/30/04
THIS WORK WAS PREPARED BY ME OR UNDER MY SUPERVISION.
1/07/03
Mitsunaga & Associates, Inc.
Structural Review By KK

STATE OF HAWAII
DEPARTMENT OF TRANSPORTATION
HIGHWAYS DIVISION
MARK 2A -OPEN GRID STEEL BRIDGE
DECK / NEW BRACING DETAILS
SAND ISLAND PARKWAY
BASCULE BRIDGE DECK REPLACEMENT
DISTRICT OF HONOLULU
Federal Aid Project No. NH-064-1(8)
Scale: As Noted NOVEMBER 2002

SHEET No. S-13 OF 37 SHEETS

ORIGINAL PLAN		
SURVEY PLOTTED BY		DATE
DRAWN BY		
TRACED BY		
DESIGNED BY	S. WILLIAMS	11/02
NOTE BOOK	QUANTITIES BY	S. WILLIAMS 11/02
No.	CHECKED BY	K. KULANI 11/02

ADD 21

FED. ROAD DIST. NO.	STATE	FED. AID PROJ. NO.	FISCAL YEAR	SHEET NO.	TOTAL SHEETS
HAWAII	HAW.	NH-064-1(8)	2002	22	45

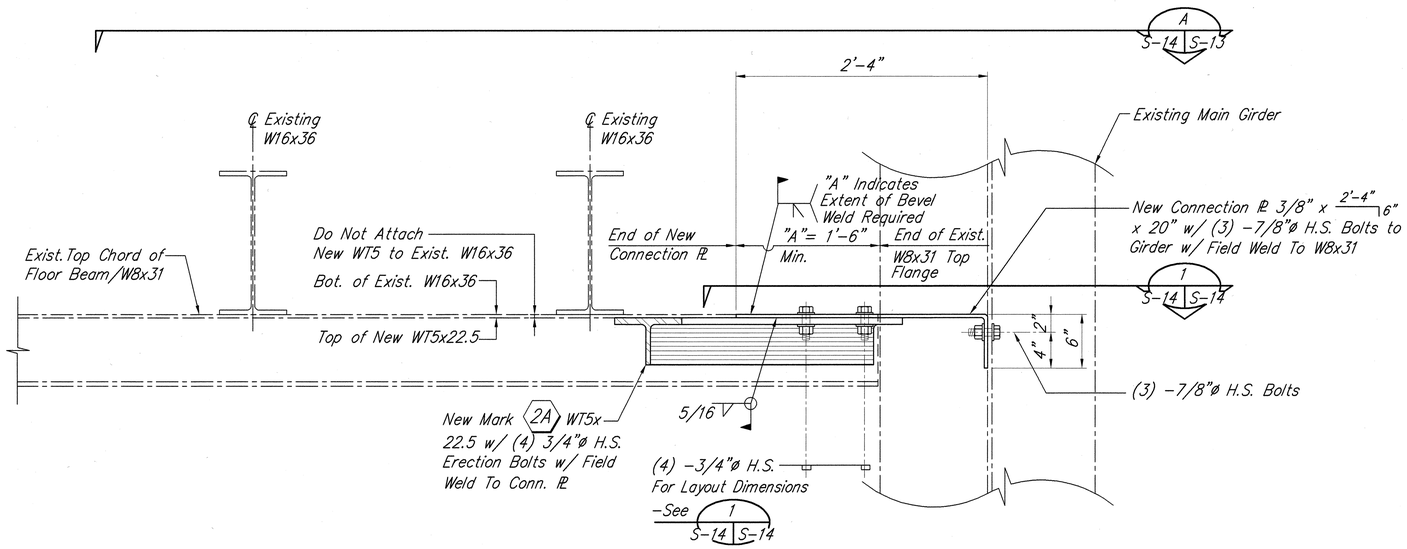

NEW MARK 2A CONNECTION DETAIL SECTION

Scale: 1 1/2" = 1'-0"

A S-13, S-14 S-14

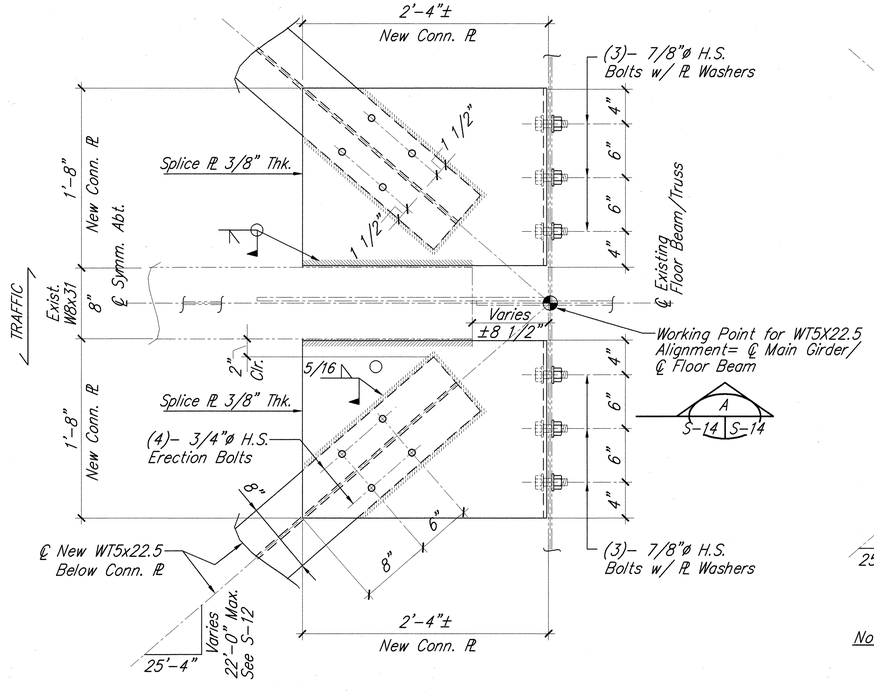

NEW MARK 2A DETAIL

Scale: 1 1/2" = 1'-0"

1 S-13, S-14 S-14

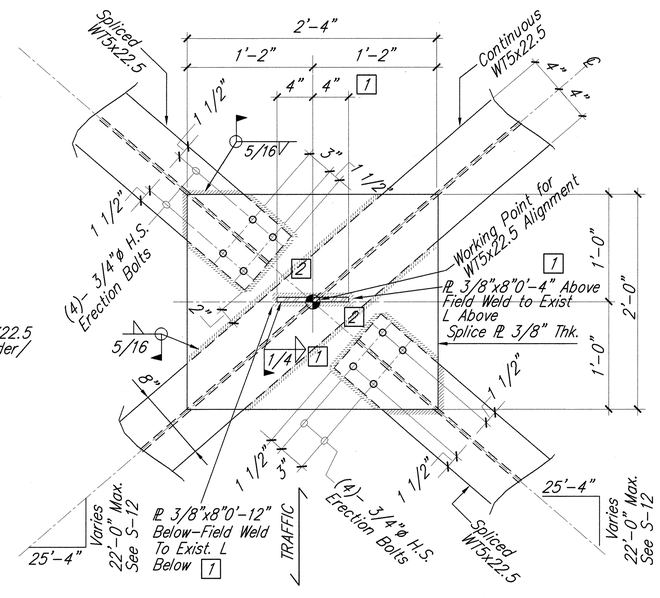

Note: See A/S-13 for Bracing Erection Notes 1

NEW MARK 2A DETAIL

Scale: 1 1/2" = 1'-0"

2 S-13 S-14

ORIGINAL PLAN	SURVEY PLOTTED BY		DATE
	DRAWN BY	"	
	TRACED BY	"	11/02
NOTE BOOK	DESIGNED BY	S. WILLIAMS	11/02
	QUANTITIES BY	S. WILLIAMS	11/02
No.	CHECKED BY	S. SALAMI	11/02

DATE	REVISIONS
1/07/03	2 Corrected Web Extent
1/07/03	1 Added Slice Plate 3/8

1 0 1FT

SCALE: 1 1/2"= 1'-0"

STEWART N. WILLIAMS LICENSED PROFESSIONAL ENGINEER No. 3908-S HAWAII, U.S.A.

Exp. Date 4/30/04

THIS WORK WAS PREPARED BY ME OR UNDER MY SUPERVISION

Mitsunaga & Associates, Inc.

KK

Structural Review By

STATE OF HAWAII
DEPARTMENT OF TRANSPORTATION
HIGHWAYS DIVISION

MARK 2A - OPEN GRID STEEL BRIDGE

DECK / NEW BRACING DETAILS

SAND ISLAND PARKWAY
BASCULE BRIDGE DECK REPLACEMENT
DISTRICT OF HONOLULU
Federal Aid Project No. NH-064-1(8)

Scale: As Noted NOVEMBER 2002

SHEET No. S-14 OF 37 SHEETS

ADD 22

FED. ROAD DIST. NO.	STATE	FED. AID PROJ. NO.	FISCAL YEAR	SHEET NO.	TOTAL SHEETS
HAWAII	HAW.	NH-064-1(8)	2002	23	45

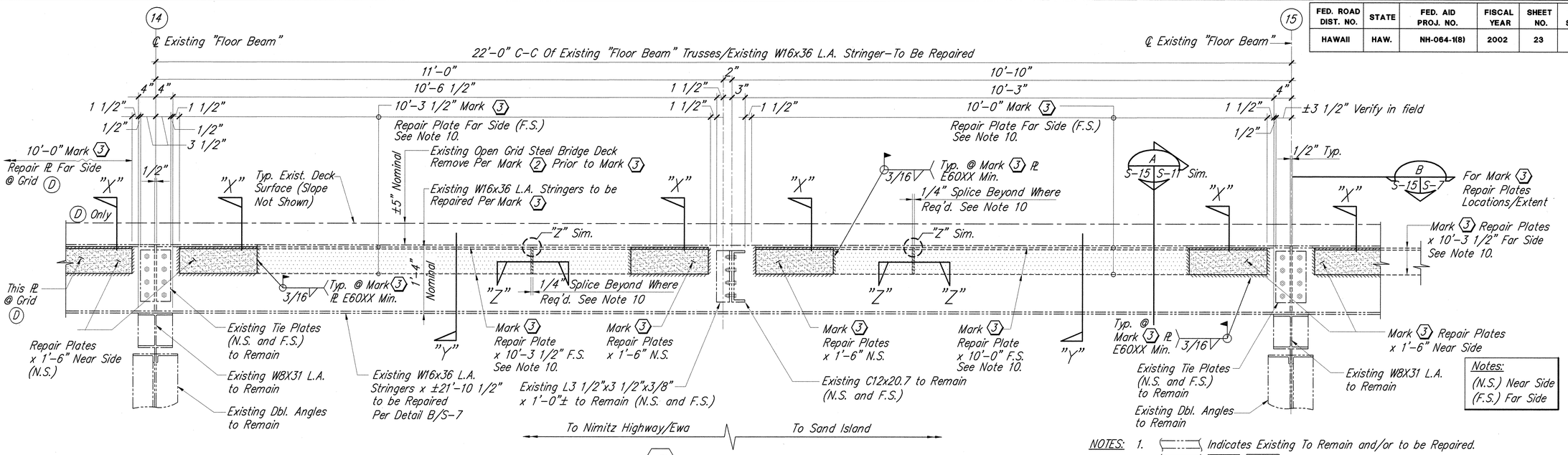

TYPICAL BAY-MARK (3) REPAIR LONGITUDINAL SECTION

Scale: 1"= 1'-0"

NOTES:

1. Indicates Existing To Remain and/or to be Repaired.
2. Indicates New Mark (3) Repair Bent Plates.
3. Mark (3) Shall Be Sequenced Per "Construction Sequence" on Sheet S-9.
4. Mark (3) Repair Bent Plate Bend Radiuses, Configurations Shall Be Verified in the Field Prior To Submitting Shop Drawings To The Engineer for Approval. No work Shall Proceed Without the Engineers approval.
5. Mark (3) Repair Bent Plates Shall Be Minimum ASTM A242 Gr. 50, Hot-Dip Galvanized After Fabrication.
6. Field Welds Shall Be Compatible With ASTM A242.
7. Refer To Special Provisions For Existing Framing/New Framing Preparation for Welding, Touch Up After Welding And Painting.
8. "L.A." Indicates 1962 As-Built Reference Designating "High Strength-Low Alloy" Steel (Assumed To Meet ASTM A242 with 50 KSI Minimum Yield Stress).
9. At Mark (3) Areas, Preparation of Existing W16x36 L.A. Member Shall include:
   a. Removal of Existing Coating(s) where required to received New Mark (3) work.
   b. Removal of Corroded Material where found. (Removal to be by Chipping-out/Grinding Smooth - to a Square Edged/Retangular Area -ready for New Steel Fill.)
   c. At Removed Areas on Horizontal Surfaces, Fill Chipped/Ground area with New ASTM A242 Material x Full Depth - Weld and Grind Smooth. Removed Areas Less Than 4 Sq. inches at Vertical (Web) Areas -May Remain Unfilled. The Remainder of Removed Areas on Vertical Surfaces shall be Filled.
   d. Prepare Repaired Material and Apply Specified Corrosion Resistant Coating(s).
   e. Place and Weld Mark (3) Repair Plates. Sequence Welding so as to least distort (by Weld Heat) W16x Members.
10. Existing W16x36 L.A. Stringer Alignments May Require that Mark (3) 10'-0" and 10'-3 1/2" Lengths Should be Made up of Lesser Panel Lengths. Where Multiple Panel Lengths are Provided, their Layout Shall be so as to Fit Between previously Corroded Zones -so that Perimeter Welds are Made on previously Non-Corroded Base Metal.

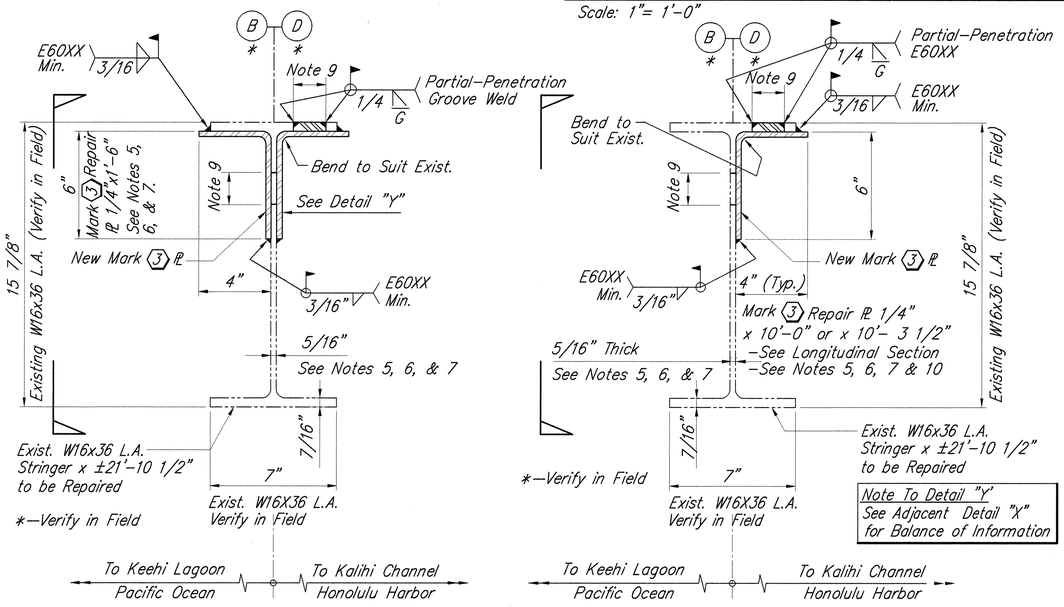

DETAIL "X"

Scale: 3"= 1'-0"

DETAIL "Y"

Scale: 3"= 1'-0"

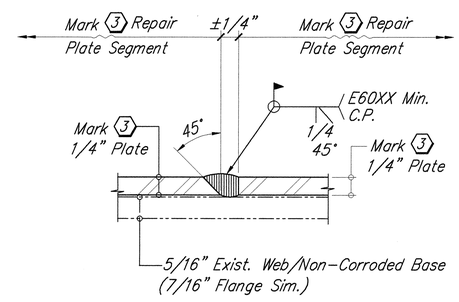

DETAIL "Z"

Scale: Full Size

MARK (3) -W16x36 L.A. STRINGER REPAIR DETAILS

Scale: AS NOTED

A S-15 S-15

S-4, S-7, S-10

SCALE: 1"= 1'-0"

SCALE: 3"= 1'-0"

STEWART N. WILLIAMS LICENSED PROFESSIONAL ENGINEER No. 3908-S HAWAII, U.S.A.

THIS WORK WAS PREPARED BY ME OR UNDER MY SUPERVISION.

Mitsunaga & Associates, Inc.

Structural Review By

STATE OF HAWAII
DEPARTMENT OF TRANSPORTATION
HIGHWAYS DIVISION

MARK (3) - W16x36 L.A. STRINGER

REPAIR DETAILS

SAND ISLAND PARKWAY

BASCULE BRIDGE DECK REPLACEMENT

DISTRICT OF HONOLULU

Federal Aid Project No. NH-064-1(8)

Scale: As Noted NOVEMBER 2002

SHEET No. S-15 OF 37 SHEETS

ORIGINAL PLAN	SURVEY PLOTTED BY		DATE
	DRAWN BY	"	"
NOTE BOOK	TRACED BY	"	"
	DESIGNED BY	S. WILLIAMS	11/02
	QUANTITIES BY	S. WILLIAMS	11/02
No.	CHECKED BY	K. KAHANU	11/02

FED. ROAD DIST. NO.	STATE	FED. AID PROJ. NO.	FISCAL YEAR	SHEET NO.	TOTAL SHEETS
HAWAII	HAW.	NH-064-1(8)	2002	24	45

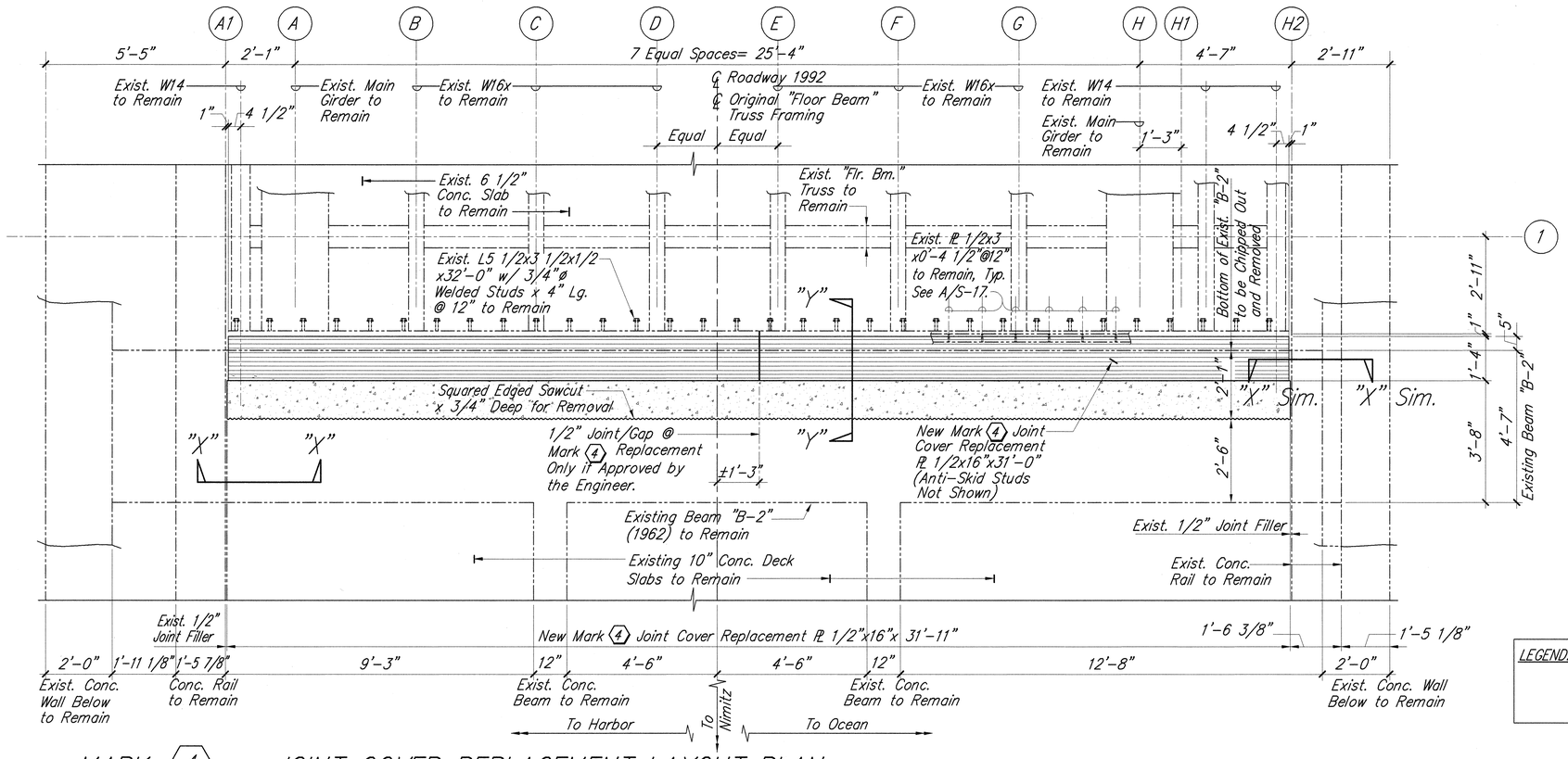

True North (North Leaf Only)

MARK 4 – JOINT COVER REPLACEMENT LAYOUT PLAN

Scale: 1/2"= 1'-0"

NOTES:

1. New Mark 4 Joint Cover Replacement Plate Shall Be Fabricated only after Removal of ±2'-1" Wide x ±1'-5" Deep x ±32'-0" Portion of of Existing Beam "B-2".
2. Locations of Existing Reinforcing Steel Shall Be Field Measured and New Plates and Rod Anchors Shall Be Laid Out to Avoid Conflict Between New Rod Anchors and Existing Reinforcing Steel.
3. See Note 4 at A/S-17 for Replacement Concrete at Mark 4 Repair.
4. Shoring at Existing Beam "B-2" Shall Remain for 21 Days Minimum after Completion of Mark 4 Concrete Replacement.
5. Provide Anti-Skid Studs –See Spec. Provision Section 648 and 1/S-13.

LEGEND:
=Existing to Remain
=New/Replacement Structural Steel
=New/Replacement Concrete

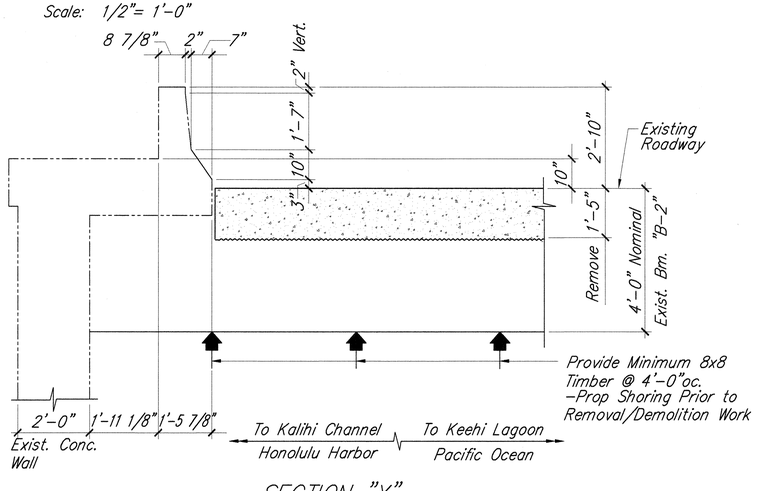

SECTION "X"

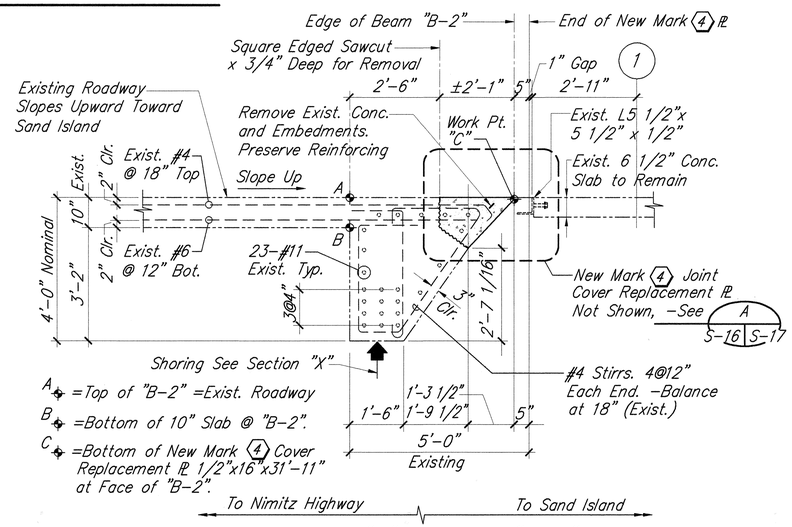

SECTION "Y" @ Beam "B-2"

MARK 4 – JOINT COVER REPLACEMENT DETAILS

Scale: 1/2"= 1'-0"

S-5, S-6, S-16 (A) S-16

2 1 0 2 4
Scale: 1/2"= 1'-0"

ORIGINAL PLAN		
	SURVEY PLOTTED BY	DATE
	SURVEY BY	"
	TRACED BY	" 11/02
	DESIGNED BY S. WILLIAMS	" 11/02
NOTE BOOK	QUANTITIES BY S. WILLIAMS	" 11/02
No.	CHECKED BY K. SAIANI	" 11/02

STEWART N. WILLIAMS LICENSED PROFESSIONAL ENGINEER No. 3908-S HAWAII, U.S.A.

THIS WORK WAS PREPARED BY ME OR UNDER MY SUPERVISION
Mitsunaga & Associates, Inc.
Structural Review By

STATE OF HAWAII
DEPARTMENT OF TRANSPORTATION
HIGHWAYS DIVISION

MARK 4 – JOINT COVER REPLACEMENT DETAILS
SAND ISLAND PARKWAY
BASCULE BRIDGE DECK REPLACEMENT
DISTRICT OF HONOLULU
Federal Aid Project No. NH-064-1(8)
Scale: As Noted NOVEMBER 2002

SHEET No. S-16 OF 37 SHEETS

FED. ROAD DIST. NO.	STATE	FED. AID PROJ. NO.	FISCAL YEAR	SHEET NO.	TOTAL SHEETS
HAWAII	HAW.	NH-064-1(8)	2002	25	45

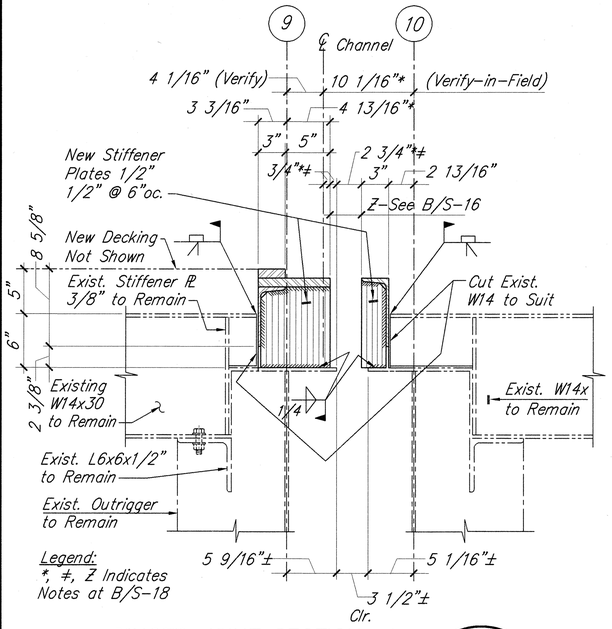

FINGER JOINT SECTION at W14x30 STRINGERS

(1 / S-18 | S-17; S-17)

Scale: 1 1/2"=1'-0"

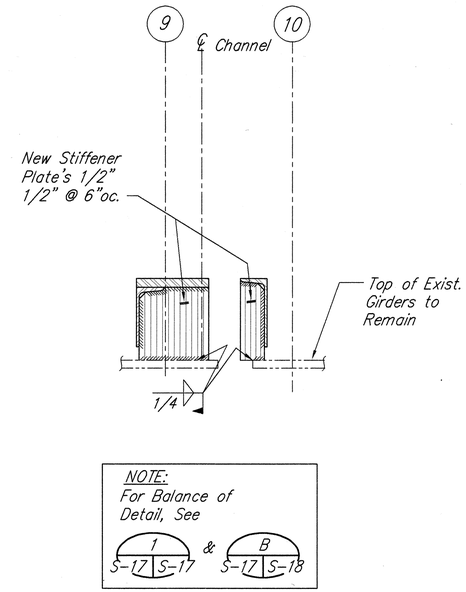

FINGER JOINT SECTION at GIRDERS on (A) and (H)

(2 / S-18 | S-17; S-17)

Scale: 1 1/2"=1'-0"

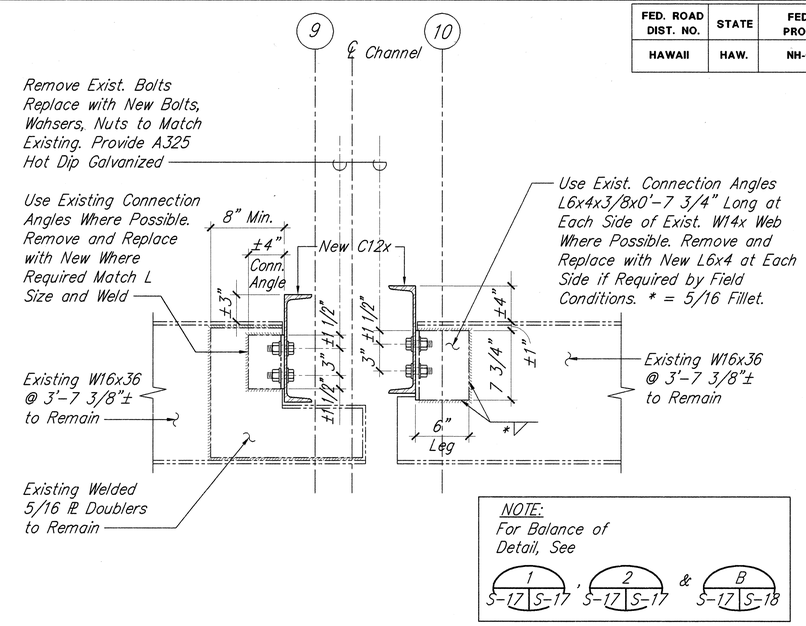

FINGER JOINT SECTION

(3 / S-18 | S-17)

Scale: 1 1/2" = 1'-0"

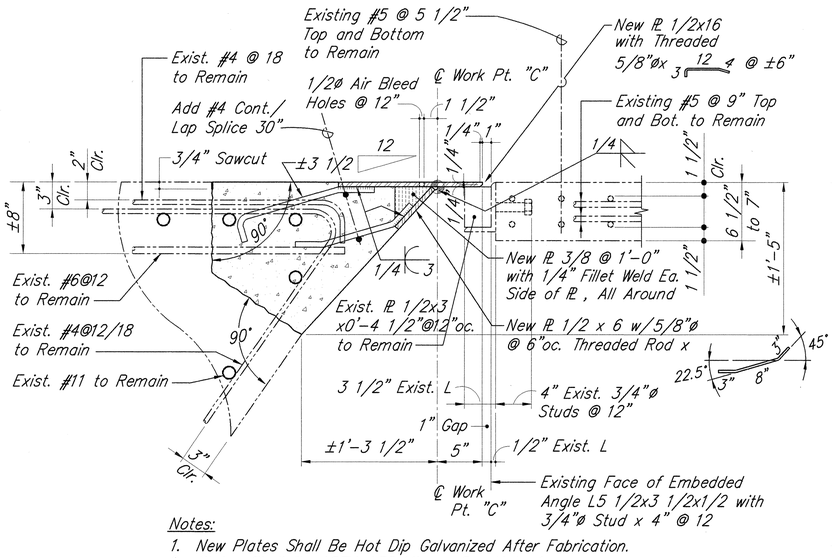

Notes:

1. New Plates Shall Be Hot Dip Galvanized After Fabrication.
2. Plates Shall Be ASTM A36 Min. – See Note 1.
3. Threaded Rods Shall Be A36 – See Note 1.
4. See Section 585 for Replacement Concrete at Mark (4) Repair. At Contractors Option and with Engineers Approval, a High Strength Pea Gravel Concrete Mix with f'c = 6000 psi at 28 Days, May be Substituted.

MARK (4) DETAIL

(A / S-16 | S-17)

Scale: 1 1/2" = 1'-0"

1 0 1FT

SCALE: 1 1/2"= 1'-0"

STEWART N. WILLIAMS — LICENSED PROFESSIONAL ENGINEER No. 3908-S — HAWAII, U.S.A.

THIS WORK WAS PREPARED BY ME OR UNDER MY SUPERVISION.

Mitsunaga & Associates, Inc.

Structural Review By

STATE OF HAWAII
DEPARTMENT OF TRANSPORTATION
HIGHWAYS DIVISION

MARK (4) -JOINT COVER REPLACEMENT

DETAIL, MARK (5) SECTIONS

SAND ISLAND PARKWAY
BASCULE BRIDGE DECK REPLACEMENT
DISTRICT OF HONOLULU
Federal Aid Project No. NH-064-1(8)

Scale: As Noted — NOVEMBER 2002

SHEET No. S-17 OF 37 SHEETS

ORIGINAL PLAN		
NOTE BOOK No.	SURVEY PLOTTED BY	DATE
	DRAWN BY S. WILLIAMS	11/02
	TRACED BY S. WILLIAMS	11/02
	DESIGNED BY S. WILLIAMS	11/02
	QUANTITIES BY K. KALANI	11/02
	CHECKED BY	

FED. ROAD DIST. NO.	STATE	FED. AID PROJ. NO.	FISCAL YEAR	SHEET NO.	TOTAL SHEETS
HAWAII	HAW.	NH-064-1(8)	2002	26	45

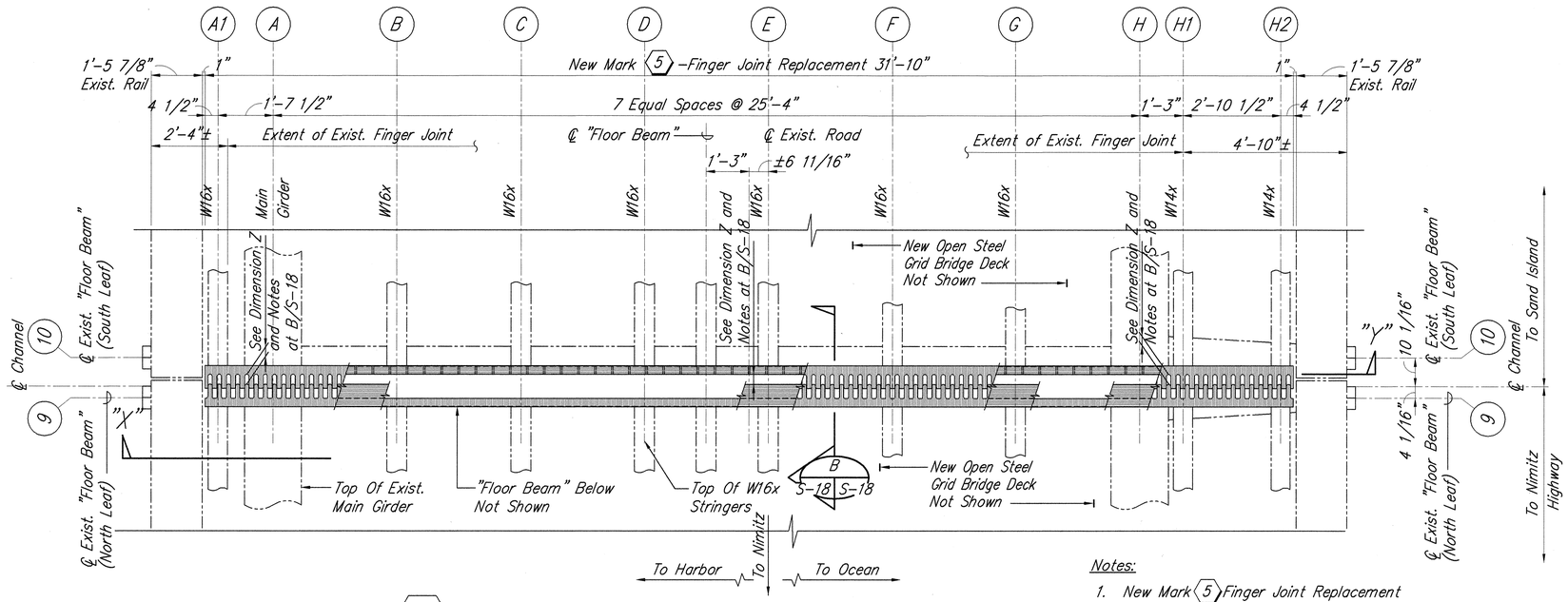

MARK 5 – FINGER JOINT REPLACEMENT LAYOUT

Scale: 1/2"= 1'-0"

Notes:

1. New Mark 5 Finger Joint Replacement Assemblies Shall Be Fabricated Only After In Place Field Measurements and Removal Of The Exisiting Finger Joint Assemblies.
2. New Mark 5 Plates Shall Be ASTM A36 Min. Hot Dip Galvanized After Fabrication.
3. New Mark 5 C12x20.7 Members And Connection Angles Shall Be ASTM A242 Min.
4. New Connection Bolts Shall Be ASTM A325.

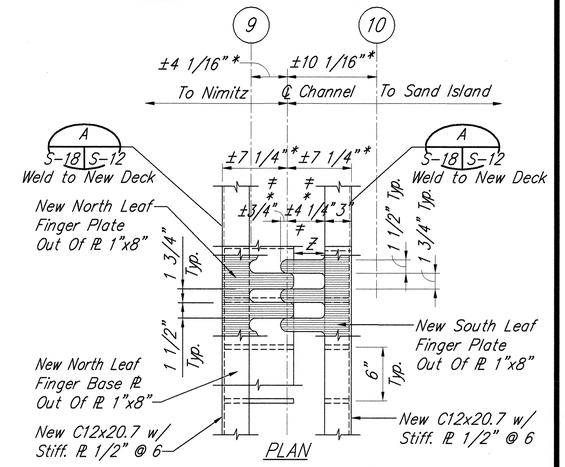

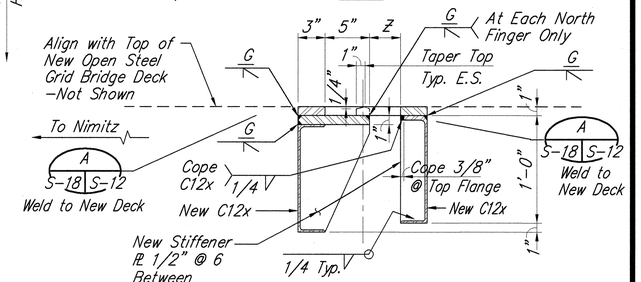

MARK 5 -SECTION

Scale: 1 1/2"=1'-0"

S-17. S-18 B S-18

Notes:

1. * Indicates Original design 1959.
2. Per Field Measurements 5/17/02 at 75° F., Existing Dimension Z Varies.3 1/2" at Grid A, 3 1/4" at Grid G and 2 3/4" at Grid H.
3. ≠ Indicates dimensions to be adjusted in accordance with exist. Field Conditions/Dimensions.

True North

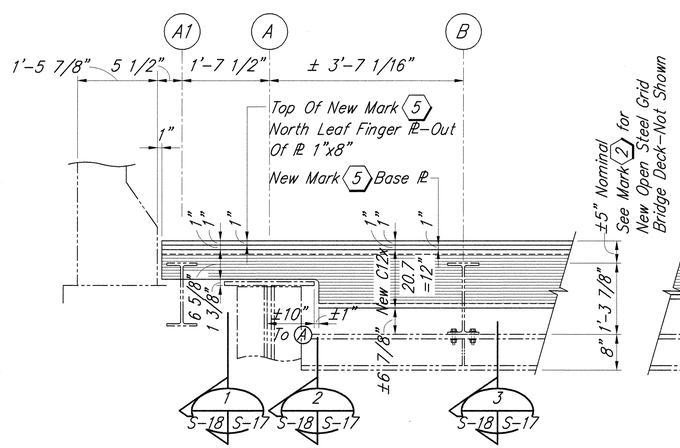

ELEVATION "X" AT GRID 9

Scale: 3/4"= 1'-0" Viewed From North

To Harbor To Ocean

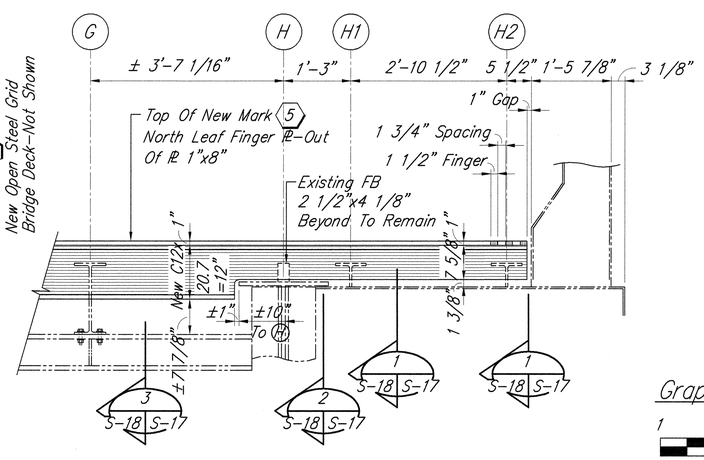

ELEVATION "Y" AT GRID 10

Scale: 3/4"= 1'-0" Viewed From North

MARK 5 – FINGER JOINT REPLACEMENT DETAILS

Scale: As Shown

S-6, S-7, S-17 A S-18

Graphic Scales:

1 0 1 2FT
SCALE: 3/4"= 1'-0"

1 0 1FT
SCALE: 1 1/2"= 1'-0"

2 1 0 2 4
SCALE: 1/2"= 1'-0"

STEWART N. WILLIAMS
LICENSED PROFESSIONAL ENGINEER
No. 3908-S
HAWAII, U.S.A.

THIS WORK WAS PREPARED BY ME OR UNDER MY SUPERVISION.

Mitsunaga & Associates, Inc.

Structural Review By

STATE OF HAWAII
DEPARTMENT OF TRANSPORTATION
HIGHWAYS DIVISION

MARK 5 -FINGER JOINT REPLACEMENT DETAILS
SAND ISLAND PARKWAY
BASCULE BRIDGE DECK REPLACEMENT
DISTRICT OF HONOLULU
Federal Aid Project No. NH-064-1(8)

Scale: As Noted NOVEMBER 2002

SHEET No. S-18 OF 37 SHEETS

ORIGINAL PLAN	SURVEY PLOTTED BY	DATE
	DRAWN BY	"
	TRACED BY	" 11/02
NOTE BOOK	DESIGNED BY S. WILLIAMS	" 11/02
	QUANTITIES BY S. WILLIAMS	" 11/02
No.	CHECKED BY K. SAGARA	" 11/02

FED. ROAD DIST. NO.	STATE	FED. AID PROJ. NO.	FISCAL YEAR	SHEET NO.	TOTAL SHEETS
HAWAII	HAW.	NH-064-1(8)	2002	27	45

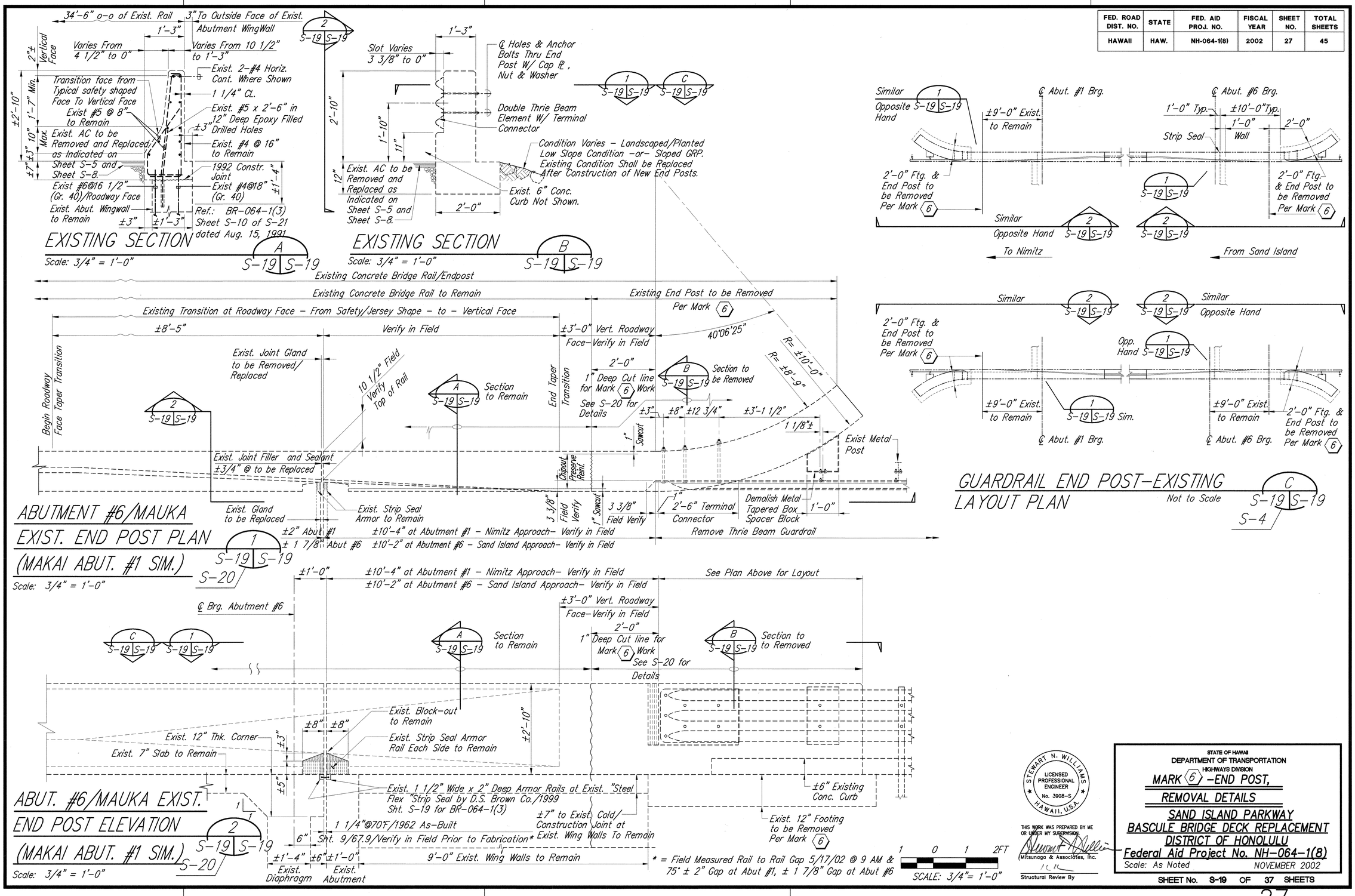

ORIGINAL PLAN	SURVEY PLOTTED BY		DATE
	DRAWN BY		
REVISED PLAN	TRACED BY		
NOTE BOOK	DESIGNED BY	S. WILLIAMS	11/02
	QUANTITIES BY	S. WILLIAMS	11/02
No.	CHECKED BY	K. KAJANI	11/02

STATE OF HAWAII
DEPARTMENT OF TRANSPORTATION
HIGHWAYS DIVISION

MARK 6 -END POST,

REMOVAL DETAILS

SAND ISLAND PARKWAY
BASCULE BRIDGE DECK REPLACEMENT
DISTRICT OF HONOLULU
Federal Aid Project No. NH-064-1(8)

Scale: As Noted NOVEMBER 2002

STEWART N. WILLIAMS — LICENSED PROFESSIONAL ENGINEER No. 3908-S — HAWAII, U.S.A.

THIS WORK WAS PREPARED BY ME OR UNDER MY SUPERVISION

Mitsunaga & Associates, Inc.

Structural Review By

SHEET No. S-19 OF 37 SHEETS

FED. ROAD DIST. NO.	STATE	FED. AID PROJ. NO.	FISCAL YEAR	SHEET NO.	TOTAL SHEETS
HAWAII	HAW.	NH-064-1(8)	2002	28	45

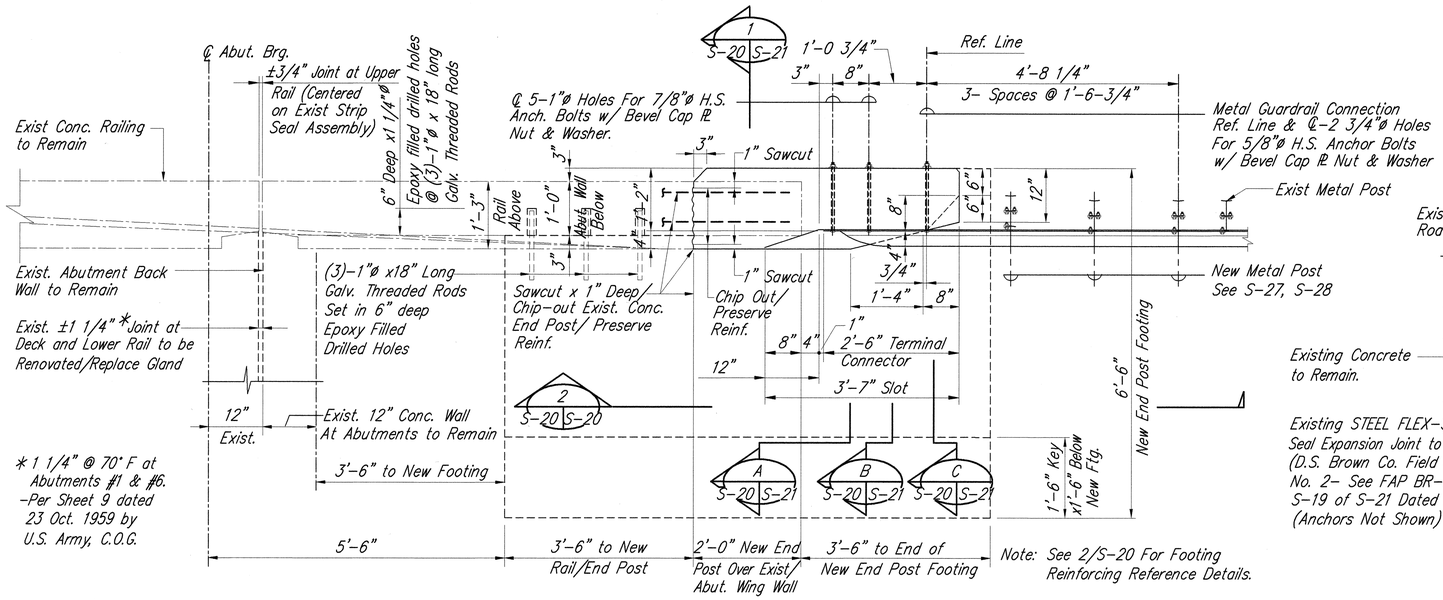

TYPICAL NEW CONCRETE RAILING/END POST/FOUNDATION PLAN

1 S-20 | S-20

Scale: 3/4" = 1'-0"

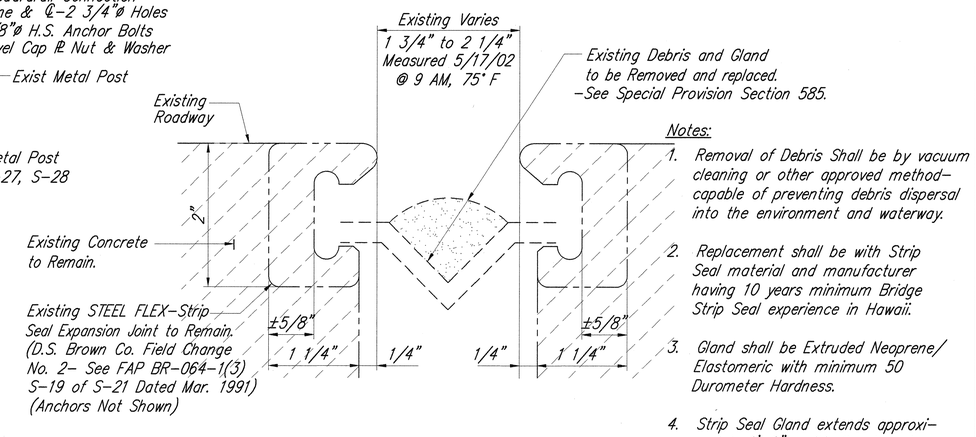

Notes:

1. Removal of Debris Shall be by vacuum cleaning or other approved method- capable of preventing debris dispersal into the environment and waterway.
2. Replacement shall be with Strip Seal material and manufacturer having 10 years minimum Bridge Strip Seal experience in Hawaii.
3. Gland shall be Extruded Neoprene/ Elastomeric with minimum 50 Durometer Hardness.
4. Strip Seal Gland extends approximately 1'-0" veritically at each Concrete Rail each side of Roadway. Supplier Shall Verify Field Conditions Prior to Start of Shop Drawings

SECTION at EXISTING STRIP SEALS

Full Size

STRIP SEAL GLAND REPLACEMENT DETAILS

A S-20 | S-20

Scale as Noted

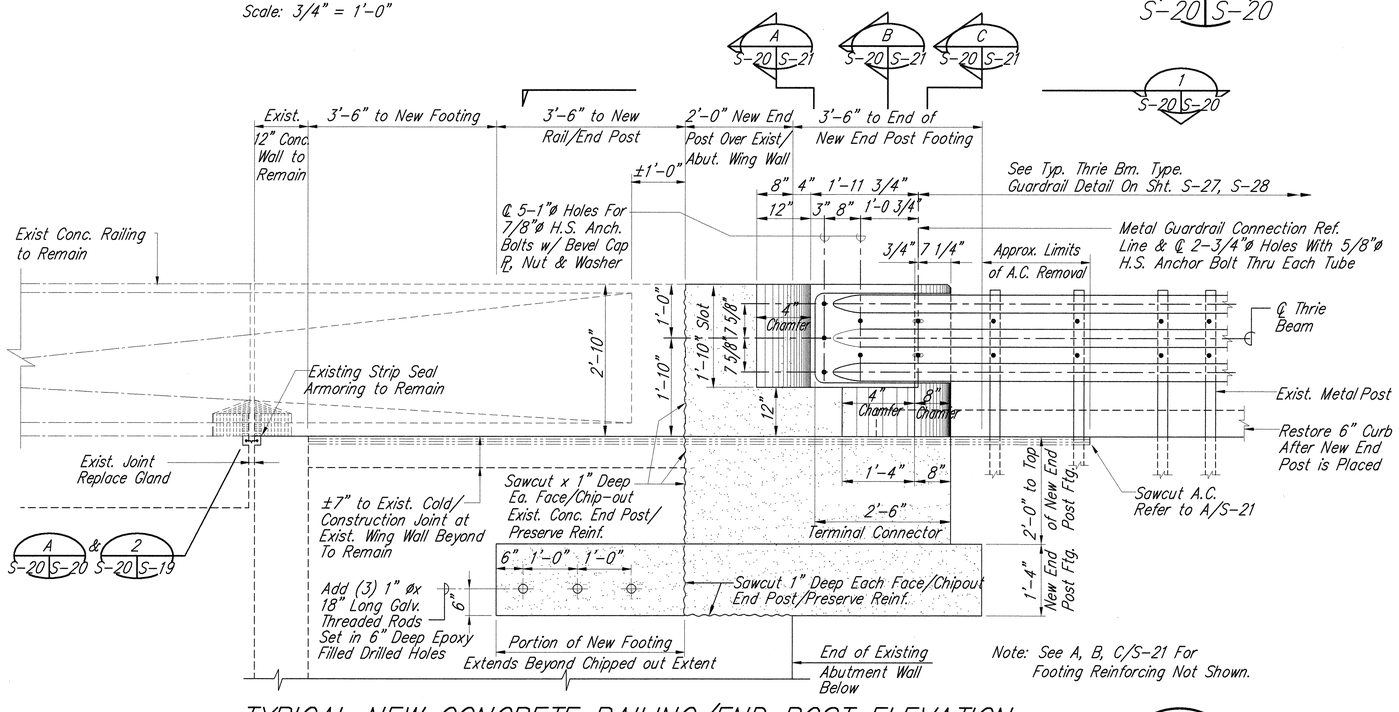

TYPICAL NEW CONCRETE RAILING/END POST ELEVATION

2 S-20 | S-20

Scale: 3/4" = 1'-0"

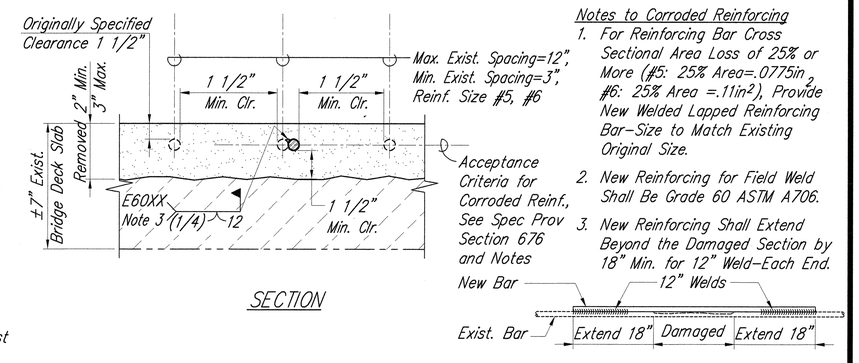

Notes to Corroded Reinforcing

1. For Reinforcing Bar Cross Sectional Area Loss of 25% or More (#5: 25% Area=.0775in^2, #6: 25% Area =.11in^2), Provide New Welded Lapped Reinforcing Bar-Size to Match Existing Original Size.
2. New Reinforcing for Field Weld Shall Be Grade 60 ASTM A706.
3. New Reinforcing Shall Extend Beyond the Damaged Section by 18" Min. for 12" Weld-Each End.

SECTION

ADDED REINFORCING AT CORROSION DAMAGED REINFORCING STEEL-MARK 6A

Scale: 3"=1'-0"

B S-21 | S-20

GRAPHIC SCALES:

1 0 1 2FT

SCALE: 3/4"= 1'-0"

6 4 2 0 6IN

SCALE: 3"= 1'-0"

STEWART N. WILLIAMS LICENSED PROFESSIONAL ENGINEER No. 3908-S HAWAII, U.S.A.

THIS WORK WAS PREPARED BY ME OR UNDER MY SUPERVISION.

Mitsunaga & Associates, Inc.

Structural Review By

STATE OF HAWAII
DEPARTMENT OF TRANSPORTATION
HIGHWAYS DIVISION

MARK 6-END POST REPLACEMENT DETAILS, STRIP SEAL GLAND REPLACEMENT DETAILS

SAND ISLAND PARKWAY
BASCULE BRIDGE DECK REPLACEMENT
DISTRICT OF HONOLULU
Federal Aid Project No. NH-064-1(8)

Scale: As Noted NOVEMBER 2002

SHEET No. S-20 OF 37 SHEETS

ORIGINAL PLAN		
	SURVEY PLOTTED BY	DATE
	DRAWN BY	"
NOTE BOOK	TRACED BY	" 11/02
	DESIGNED BY S. WILLIAMS	" 11/02
	QUANTITIES BY S. WILLIAMS	" 11/02
No.	CHECKED BY K. KALANI	" 11/02

FED. ROAD DIST. NO.	STATE	FED. AID PROJ. NO.	FISCAL YEAR	SHEET NO.	TOTAL SHEETS
HAWAII	HAW.	NH-064-1(8)	2002	29	45

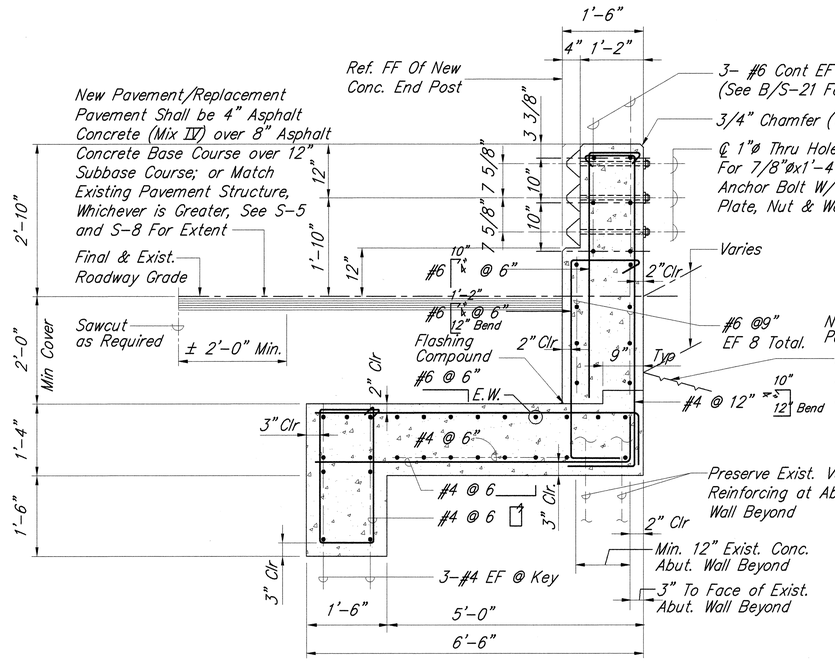

SECTION A S-21 S-21 S-20
Scale: 3/4"=1'-0"

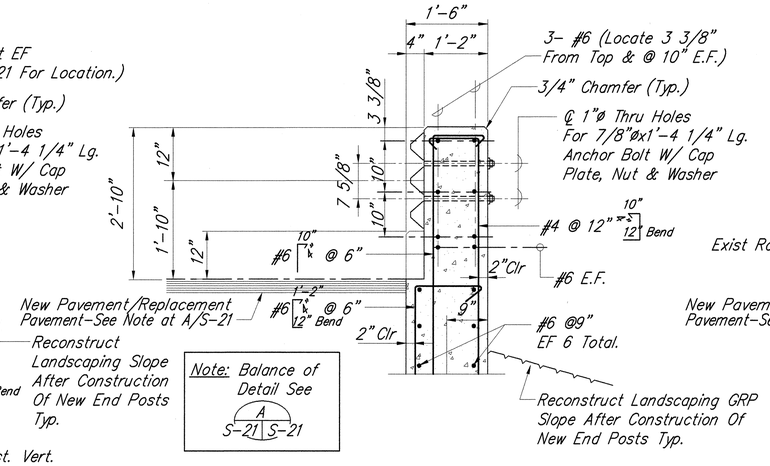

Note: Balance of Detail See A S-21 S-21

SECTION B S-21 S-21 S-20
Scale: 3/4"= 1'-0"

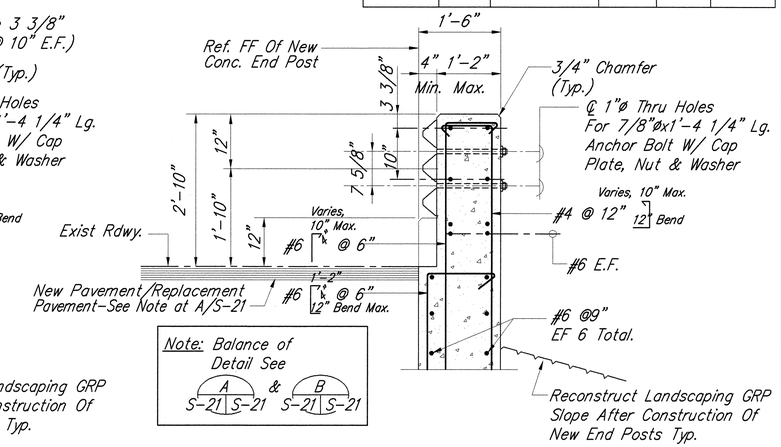

Note: Balance of Detail See A S-21 S-21 & B S-21 S-21

SECTION C S-21 S-21
Scale: 3/4"= 1'-0"

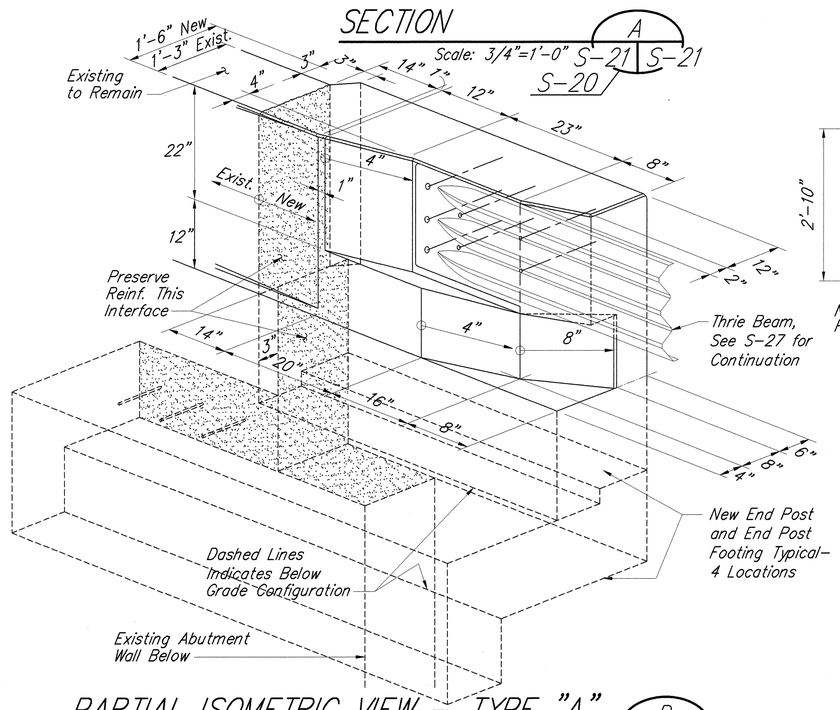

PARTIAL ISOMETRIC VIEW - TYPE "A" ENDPOST UPGRADE
Not to Scale
D S-21 S-21

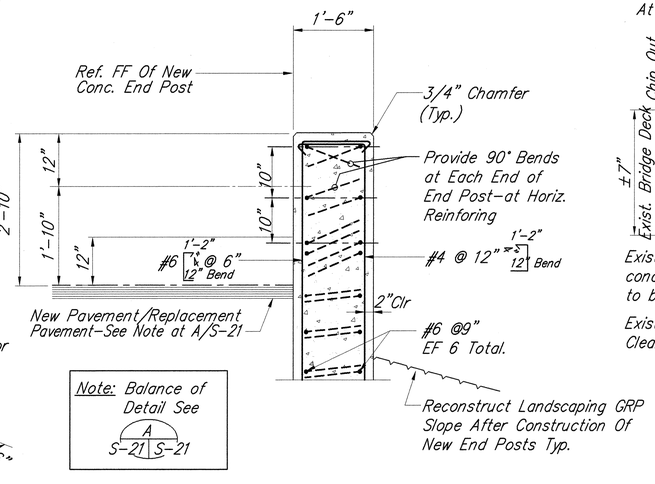

Note: Balance of Detail See A S-21 S-21

SECTION 1 S-20 S-21
Scale: 3/4"= 1'-0"

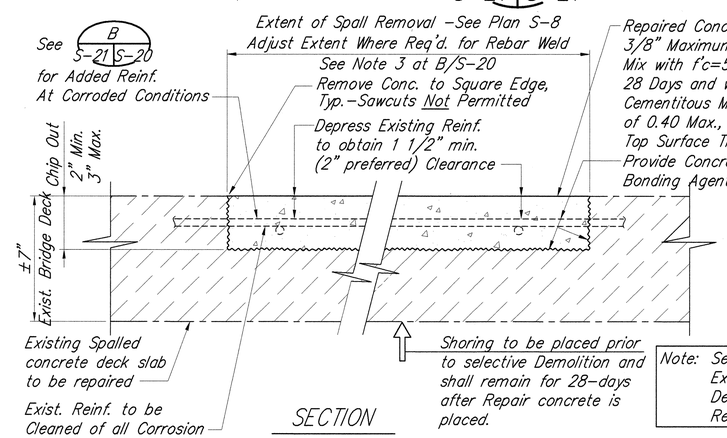

Note: See S-30 For Exist. Bridge Deck Slab Reinforcing

SECTION

MARK 6A -REPAIR CONCRETE DECK SPALLS MARK
Scale: 3"= 1'-0"
2 S-21 S-21

3 0 3 6 IN
SCALE: 3"= 1'-0"
1 0 1 2FT
SCALE: 3/4"= 1'-0"

STEWART N. WILLIAMS LICENSED PROFESSIONAL ENGINEER No. 3908-S HAWAII, U.S.A.

THIS WORK WAS PREPARED BY ME OR UNDER MY SUPERVISION.
Mitsunaga & Associates, Inc.
Structural Review By

STATE OF HAWAII
DEPARTMENT OF TRANSPORTATION
HIGHWAYS DIVISION
MARK 6 -END POST REPLACEMENT DET.,
MARK 6A - REPAIR CONC. DECK SPALLS
SAND ISLAND PARKWAY
BASCULE BRIDGE DECK REPLACEMENT
DISTRICT OF HONOLULU
Federal Aid Project No. NH-064-1(8)
Scale: As Noted NOVEMBER 2002

SHEET No. S-21 OF 37 SHEETS

ORIGINAL PLAN			
	SURVEY PLOTTED BY		DATE
	DRAWN BY	"	"
	TRACED BY	"	"
NOTE BOOK	DESIGNED BY	S. WILLIAMS	11/02
	QUANTITIES BY	S. WILLIAMS	11/02
No.	CHECKED BY	S. WILLIAMS	11/02

FED. ROAD DIST. NO.	STATE	FED. AID PROJ. NO.	FISCAL YEAR	SHEET NO.	TOTAL SHEETS
HAWAII	HAW.	NH-064-1(8)	2002	30	45

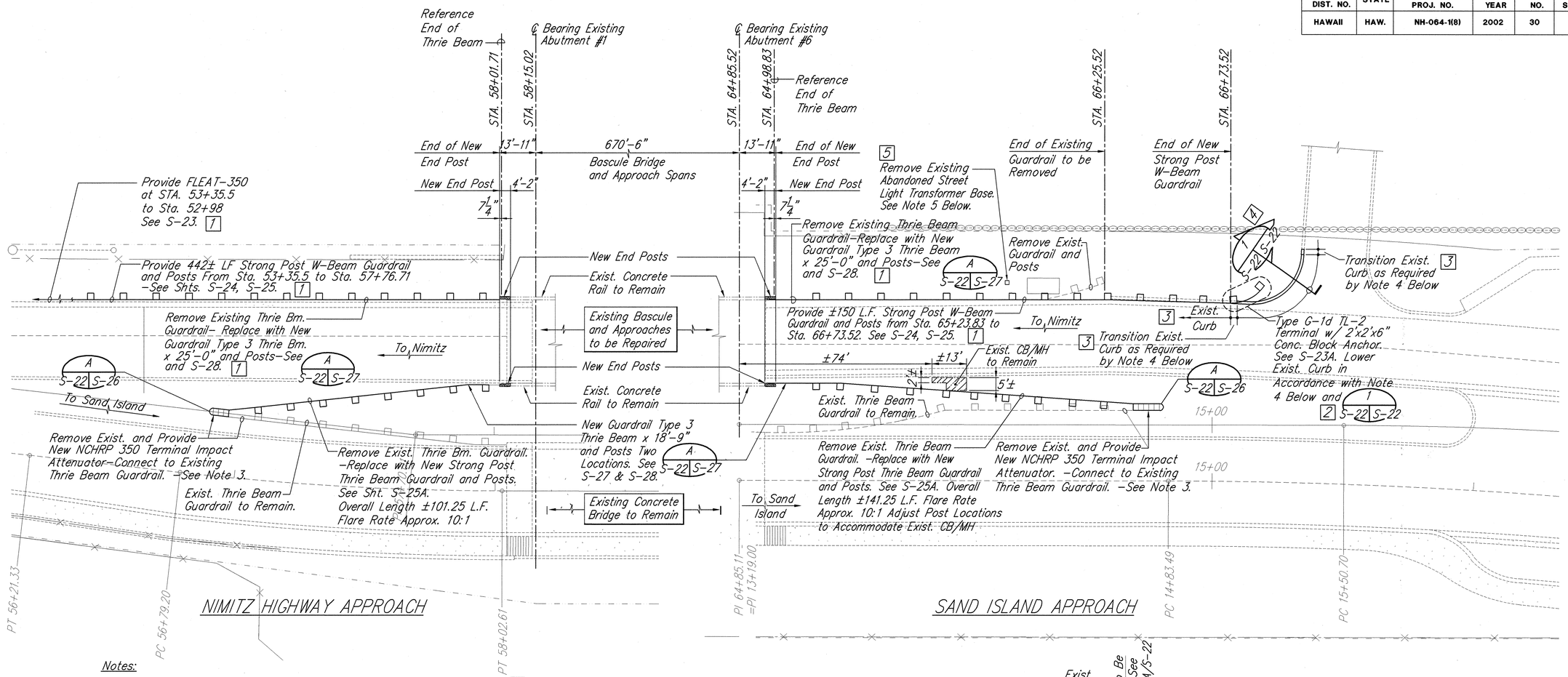

Notes:

1. Contractor shall tone area prior to start of construction. Verify location of existing fuel, water and Electrical lines. Exercise extreme care when working over Existing Utility Lines. See General Note #5 on Sheet C-1 for Further Information.
2. Adjust locations of New Posts to avoid Existing Utilities.
3. NCHRP 350 Crash Cushions shall be for System width= 24", shall consist of 4 bays minimum, shall be Redirective, Non-Gating and Approved by FHWA and HDOT for 50 mph velocity. Furnish and Install Quadguard System or TAU-II; Terminal Impact Attentuator. Refer to Special Provisions Specification Section 693 and A S-22 S-26
3 4. The Existing Curb in Front of Type G-1d TL-2 Terminal Shall be Lowered to 4". This Work Shall Include an 8.33% ± Transition From 6" Height to 4". Begin Transition at Sta. 66+73±. End Transition (From 6" Height to 4") at Sta. 66+75±. Lower Remainder of Existing Concrete Curb to 4" - From Sta. 66+75± and extending Up - Station; to approximately 5 feet from the State Right of Way Boundary.
Provide an 8.33% ± Transition from 4" Height to the Existing 6" Height. The Transitions shall be Blended with the Existing Curb Geometry by Grinding and Easing Curb Edges.
Payment for the Existing Concrete Curb Lowering Shall Be Incidental to Item No. 606.3200 Terminal Section Type G-1d TL-2. Refer to Detail 1/S-22.
3 5. Remove Existing Abandoned Street Light Transformer Base as Shown on the Plans and as Specified in Special Provisions Section 202. Dress Shoulder per Section 210. Payment for the Removal of the Existing Abandoned Transformer Base Shall be Incidental to the Various Contract Items.

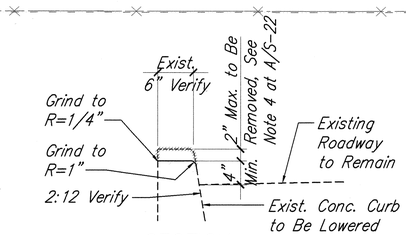

SECTION

CURB TYPE 2D-MODIFIED No Scale 4 1 S-22 S-22

PARTIAL SITE PLAN

Scale: 1"= 20'

A S-22 S-22

20' 10' 0 20' 40'

SCALE: 1"= 20'

DATE	REVISION
1/07/03	5 Added Removal Note
1/07/03	4 Added Detail 1
1/07/03	3 Added Notes 4 and 5
1/07/03	2 Revised Curb Note
1/07/03	1 Deleted Curb Note

STATE OF HAWAII
DEPARTMENT OF TRANSPORTATION
HIGHWAYS DIVISION

MARK 7 -END TREATMENT

REPLACEMENT DETAILS
SAND ISLAND PARKWAY
BASCULE BRIDGE DECK REPLACEMENT
DISTRICT OF HONOLULU
Federal Aid Project No. NH-064-1(8)

Scale: As Noted NOVEMBER 2002

STEWART N. WILLIAMS LICENSED PROFESSIONAL ENGINEER No. 3908-S HAWAII, U.S.A.

Exp Dn 6/30/04

THIS WORK WAS PREPARED BY ME OR UNDER MY SUPERVISION.

11/21/03

Mitsunaga & Associates, Inc.

Structural Review By KK

SHEET No. S-22 OF 37 SHEETS

ORIGINAL PLAN		DATE
SURVEY PLOTTED BY		
DRAWN BY		
TRACED BY		
DESIGNED BY	S. WILLIAMS	11/02
QUANTITIES BY	S. WILLIAMS	11/02
CHECKED BY	K. NAGANO	11/02
NOTE BOOK No.		

ADD 30