FED. ROAD DIST. NO.	STATE	FED. AID PROJ. NO.	FISCAL YEAR	SHEET NO.	TOTAL SHEETS
HAWAII	HAW.	BR-064-1(3)	1991	7	38

STRUCTURAL GENERAL NOTES

1. GENERAL SPECIFICATIONS: STATE OF HAWAII, DEPARTMENT OF TRANSPORTATION STANDARD SPECIFICATIONS FOR ROAD AND BRIDGE CONSTRUCTION, 1985 AND SPECIAL PROVISIONS PREPARED FOR THIS CONTRACT.

2. DESIGN SPECIFICATIONS: AASHTO STANDARD SPECIFICATIONS FOR HIGHWAY BRIDGES, FOURTEENTH EDITION, 1989.

3. DESIGN LOADS:
   - A. DEAD LOAD: CONCRETE UNIT WEIGHT OF 160 PCF HAS BEEN ASSUMED FOR DEAD LOAD CALCULATIONS.
   - B. LIVE LOAD: HS20-44 AND INTERSTATE LOADING.
   - C. SEISMIC LOAD: SEISMIC PERFORMANCE CATEGORY B IN ACCORDANCE WITH AASHTO GUIDE SPECIFICATIONS FOR SEISMIC DESIGN OF HIGHWAY BRIDGES, 1983. MINIMUM ACCELERATION COEFFICIENT SHALL BE EQUAL TO 0.18.

4. DESIGN STRESSES:
   - A. ALLOWABLE CONCRETE STRESSES USED IN DESIGN SHALL CONFORM TO AASHTO STANDARD SPECIFICATIONS FOR HIGHWAY BRIDGES, 14TH EDITION, 1989 AND INTERIM SPECIFICATIONS OF 1989 THRU 1990.

CONCRETE	f'c	fc	LOCATION
CLASS A	3,000 PSI	1,200 PSI	ALL OTHER LOCATIONS
5,000	5,000 PSI	2,000 PSI	CONCRETE DECK SLAB
SEAL	3,000 PSI	1,200 PSI	PILE CONC. JACKET

   - B. REINFORCING STEEL DESIGN STRESS: GRADE 40 AND 60, fs = 20,000 PSI.

5. MATERIALS:
   - A. ALL REINFORCING STEEL SHALL CONFORM TO THE REQUIREMENTS OF ASTM A615 AND SHALL BE DEFORMED. REINFORCING STEEL SHALL BE GRADE 40 OR 60, EXCEPT TIES AND STIRRUPS WHICH SHALL BE GRADE 40.
   - B. ALL STRUCTURAL STEEL SHALL CONFORM TO THE REQUIREMENTS OF ASTM A36, UNLESS OTHERWISE NOTED.
   - C. USE TYPE II CEMENT FOR ALL CONCRETE.

6. REINFORCEMENT:
   - A. THE MINIMUM CLEAR COVER FOR REINFORCING STEEL SHALL BE AS FOLLOWS UNLESS OTHERWISE SPECIFIED ON THE PLANS.
     - 1) DECK SLABS
       TOP BARS - 1 1/2"
       BOTTOM BARS - 1 1/2"
     - 2) VERTICAL BARS - 2"
   - B. REINFORCING BARS SHALL BE DETAILED IN ACCORDANCE WITH "DETAILS AND DETAILING OF CONCRETE REINFORCEMENT" (ACI 315) UNLESS NOTED OTHERWISE.
   - C. ALL DIMENSIONS RELATING TO REINFORCING BARS (I.E. SPACING OF BARS, ETC.) ARE TO CENTERS OF BARS UNLESS NOTED OTHERWISE.
   - D. END HOOKS FOR REINFORCING STEEL TO BE STANDARD HOOK UNLESS NOTED OTHERWISE.

7. STRUCTURAL STEEL:
   - A. WORKMANSHIP SHALL BE IN ACCORDANCE WITH THE AISC MANUAL OF STEEL CONSTRUCTION 9TH EDITION.
   - B. ALL WELDING SHALL BE PERFORMED BY CERTIFIED WELDERS IN ACCORDANCE WITH LATEST AWS STANDARDS.
   - C. HIGH STRENGTH BOLTS AND NUTS SHALL CONFORM TO ASTM A325, GALVANIZED.
   - D. CONNECTIONS SHALL DEVELOP THE FULL STRENGTH OF MEMBERS CONNECTED UNLESS OTHERWISE DETAILED. ANCHORS WELDED TO PLATE INSERTS EMBEDDED IN CONCRETE SHALL BE WELDED TO DEVELOP FULL STRENGTH OF THE ANCHORS.
   - E. THE CONTRACTOR SHALL TAKE ADEQUATE MEASURES TO PREVENT EXCESSIVE HEAT BUILD UP AND CRACKING OF CONCRETE OR OTHER ATTACHED MATERIAL DUE TO WELDING. THE CONTRACTOR SHALL SUBMIT WELDING PROCEEDURES TO THE ENGINEER PRIOR TO COMMENCING WELDING WORK.
   - F. SHOP DRAWINGS INDICATING FABRICATION AND ERECTION DIAGRAMS SHALL BE SUBMITTED TO THE ENGINEER FOR REVIEW.
   - G. USE E70 WELDING ELECTRODES.
   - H. FOR CLEANING AND PAINTING REQUIREMENTS SEE SPECIFICATIONS.

8. CONSTRUCTION METHODS:
   - A. SEE STANDARD SPECIFICATIONS FOR ROAD AND BRIDGE CONSTRUCTION AND SPECIAL PROVISIONS.
   - B. THE TOP OF CONCRETE DECK SLAB SHALL BE CONSTRUCTED TO CONFORM TO THE ROADWAY VERTICAL AND HORIZONTAL CURVES INDICATED ON THE PLANS.
   - C. EXCEPT AS OTHERWISE NOTED ALL VERTICAL DIMENSIONS ARE MEASURED PLUMB.
   - D. UNLESS NOTED OTHERWISE, ALL EXPOSED CONCRETE EDGES SHALL BE CHAMFERED 3/4" x 3/4".
   - E. ALL BEARING SURFACES SHALL BE SET HORIZONTALLY LEVEL AND PLUMB.

9. GENERAL NOTES:
   - A. CONTRACTOR SHALL VERIFY ALL DIMENSIONS AND CONDITIONS AND SHALL NOTIFY THE ENGINEER IN WRITING OF ANY DISCREPANCIES OR CONFLICTS BEFORE COMMENCING WORK.
   - B. DETAILS SHOWN ON THE DRAWINGS SHALL BE TYPICAL FOR ALL SIMILAR CONDITIONS. MODIFY DETAILS FOR SPECIAL CONDITIONS AS DIRECTED BY THE ENGINEER.
   - C. THE CONTRACTOR SHALL BE FULLY RESPONSIBLE FOR THE METHODS OF CONSTRUCTION, QUALITY OF CONSTRUCTION, SAFETY OF WORKMEN, ADEQUACY OF FALSEWORK AND BRACING AND OTHER TEMPORARY ITEMS USED IN EXECUTING THE WORK.
   - D. PLANS FOR THE EXISTING BASCULE BRIDGE ARE AVAILABLE FOR REVIEW PRIOR TO THE OPENING OF BIDS AT THE DEPARTMENT OF TRANSPORTATION, HIGHWAYS DIVISION.
   - E. THE CONTRACTOR SHALL VISIT THE PROJECT SITE TO VERIFY ACTUAL CONDITIONS PRESENT PRIOR TO SUBMITTING BID.
   - F. PRIOR TO STARTING THE WORK, THE CONTRACTOR SHALL VERIFY EXISTING CONDITIONS AS THE DRAWINGS WERE PREPARED FROM EXISTING "AS BUILT" DRAWINGS AND MIGHT NOT REFLECT ACTUAL FIELD CONDITIONS.
   - G. WHERE EXISTING REINFORCEMENT WHICH IS TO REMAIN BUT IS DAMAGED AND CANNOT BE USED, THE COST TO PLACE EXPANSION ANCHORS, EPOXY FILLED HOLES OR OTHER METHODS TO ANCHOR NEW REINFORCEMENT SHALL BE CONSIDERED INCIDENTAL TO THE VARIOUS REINFORCING STEEL PAY ITEMS.

ESTIMATED QUANTITIES

ITEM NUMBER	ITEM DESCRIPTION	UNIT	QUANTITY
202.0441	REMOVAL OF ITEMS ON EXISTING NIMITZ APPROACH SPAN	L.S.	
202.0442	REMOVAL OF ITEMS ON EXISTING SAND ISLAND APPROACH SPAN	L.S.	
202.0443	REMOVAL OF ITEMS ON EXISTING BASCULE BRIDGE SPAN AND PIERS	L.S.	
501.0200	STRUCTURAL STEEL (225,700 LBS.)	L.S.	(225,700 LBS)
501.0301	OPEN GRID STEEL BRIDGE DECK	L.S.	(1,125 SQ FT)
501.0401	MISCELLANEOUS STRUCTURAL STEEL REPAIRS	F.A.	F.A.
502.2111	TREATED TIMBER (0.5 MFBM)	L.S.	0.5 MFB
503.1035	PILE CONCRETE JACKET	EACH	42
503.6001	CONCRETE IN APPROACH SPANS	L.S.	(305 CU YD)
503.6002	CONCRETE IN BASCULE BRIDGE SPAN	L.S.	(105 CU YD)
507.0101	TYPE 'A' METAL BRIDGE RAILING	LIN FT	530
507.5100	CONCRETE BRIDGE RAILING	LIN FT	860
511.1001	PAINTING BRIDGE (83,000 S.F.)	L.S.	83,800 SQ FT
512.1001	DECK EXPANSION JOINT	LIN FT	210
602.0091	REINFORCING STEEL IN APPROACH SPANS	L.S.	(135,000 LBS)
602.0092	REINFORCING STEEL IN BASCULE BRIDGE SPAN	L.S.	(3,100 LBS)
648.0100	SKID RESISTANCE SYSTEM (2590 S.F.)	L.S.	2,590 SQ FT
649.1000	DISPOSAL OF LEAD-CONTAINING PAINT	TON	105

INDEX TO BRIDGE DRAWINGS

SYMBOLS AND ABBREVIATIONS

ABUT.	ABUTMENT
@	AT
&	AND
AZ	AZIMUTH
℄	BASELINE
BAL.	BALANCE
BET.	BETWEEN
BOT.	BOTTOM
BRG.	BEARING
BVC	BEGIN VERTICAL CURVE
℄	CENTERLINE
C.G.S.	CENTER OF GRAVITY OF STEEL
CG	CHANGE GRADE
CONC.	CONCRETE
CONN.	CONNECTION
CONST.	CONSTRUCTION
CONT.	CONTINUOUS
C.F., CU.FT.	CUBIC FOOT
C.Y., CU.YD.	CUBIC YARD
DIA.	DIAMETER
DIAG.	DIAGONAL
DET.	DETAIL
EA.	EACH
E.F.	EACH FACE
E.F.V.	EACH FACE VERTICAL
E.W.	EACH WAY
EL., ELEV.	ELEVATION
E.P.	EDGE OF PAVEMENT
EQ.	EQUAL
EXIST.	EXISTING
EXP.	EXPANSION
EVC.	END VERTICAL CURVE
FIN.	FINISH
FTG.	FOOTING
F.A.	FORCE ACCOUNT
FT.	FOOT
GR.	GUARD RAIL
GRD.	GROUND
G.R.P.	GROUTED RUBBLE PAVING
HORIZ.	HORIZONTAL
HT.	HEIGHT
HFFC	HONOLULU FUEL FACILITIES CORP.
I.B.	INBOUND
I.F.V.	INSIDE FACE VERTICAL
IN.	INCH
JT.	JOINT
LIN. FT.	LINEAR FEET
LG.	LONG
L.A.	LOW ALLOY
L.S.	LUMP SUM
LB.	POUND
MAX.	MAXIMUM
MNY.	MANY
MISC.	MISCELLANEOUS
MECH.	MECHANICAL
N.I.C.	NOT IN CONTRACT
NO., #	NUMBER
O.B.	OUTBOUND
O.C.	ON CENTER
O.F.V.	OUTSIDE FACE VERTICAL
O/S	OFF SET
P.I.	POINT OF INTERSECTION
⅊	PLATE
PCF	POUNDS PER CUBIC FEET
PSI	POUNDS PER SQUARE INCH
PT.	POINT
R=	RADIUS
REINF.	REINFORCEMENT
REQ'D.	REQUIRED
SECT.	SECTION
SI	SAND ISLAND
SIM.	SIMILAR
SP.	SPACE
SS	STAINLESS STEEL
STA.	STATION
STIRR.	STIRRUP
SQ.	SQUARE
SYMM.	SYMMETRICAL
TYP.	TYPICAL
T.O.W.	TOP OF WALL
VERT.	VERTICAL
W/	WITH
WWF	WELDED WIRE FABRIC
WV	WATER VALVE

A / SI | SI — SECTION OR DETAIL DESIGNATION; SHEET NO. WHERE SECTION OR DETAIL IS SHOWN; SHEET NO. WHERE SECTION OR DETAIL ORGINATES.

1 — LIST OF WORK TO BE PERFORMED

3 — REPAIR SCHEDULE

DATE	REVISION

ROSCOE O. FORD
REGISTERED PROFESSIONAL ENGINEER
No. 3731-S
HAWAII, U.S.A.

THIS WORK WAS PREPARED BY ME OR UNDER MY SUPERVISION

Roscoe O. Ford

STATE OF HAWAII
DEPARTMENT OF TRANSPORTATION
HIGHWAYS DIVISION

STRUCTURAL GENERAL NOTES, ESTIMATED QUANTITES & INDEX TO BRIDGE DRAWINGS
SAND ISLAND BASCULE BRIDGE
REHABILITATION PHASE II
PROJECT NO. BR-064-1(3)

SCALE: AS NOTED DATE: MARCH 1991

SHEET No. N1 OF S21 SHEETS

ORIGINAL PLAN | NOTEBOOK No. | SURVEY PLOTTED BY | DRAWN BY | TRACED BY | DESIGNED BY | QUANTITIES BY | CHECKED BY | DATE

FED. ROAD DIST. NO.	STATE	FED. AID PROJ. NO.	FISCAL YEAR	SHEET NO.	TOTAL SHEETS
HAWAII	HAW.	BR-064-1(3)	1991	8	38

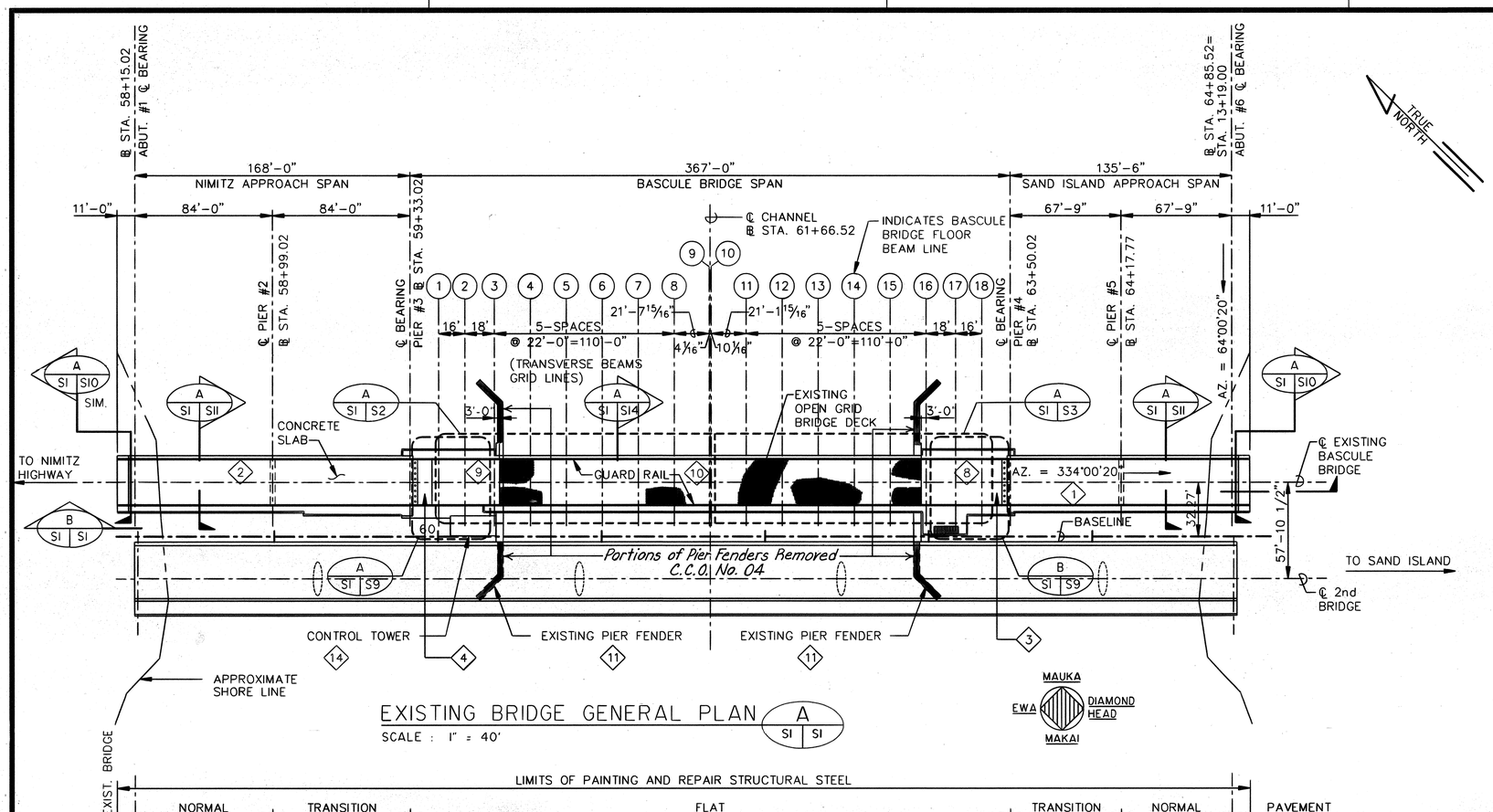

EXISTING BRIDGE GENERAL PLAN (A / SI SI)

SCALE : 1" = 40'

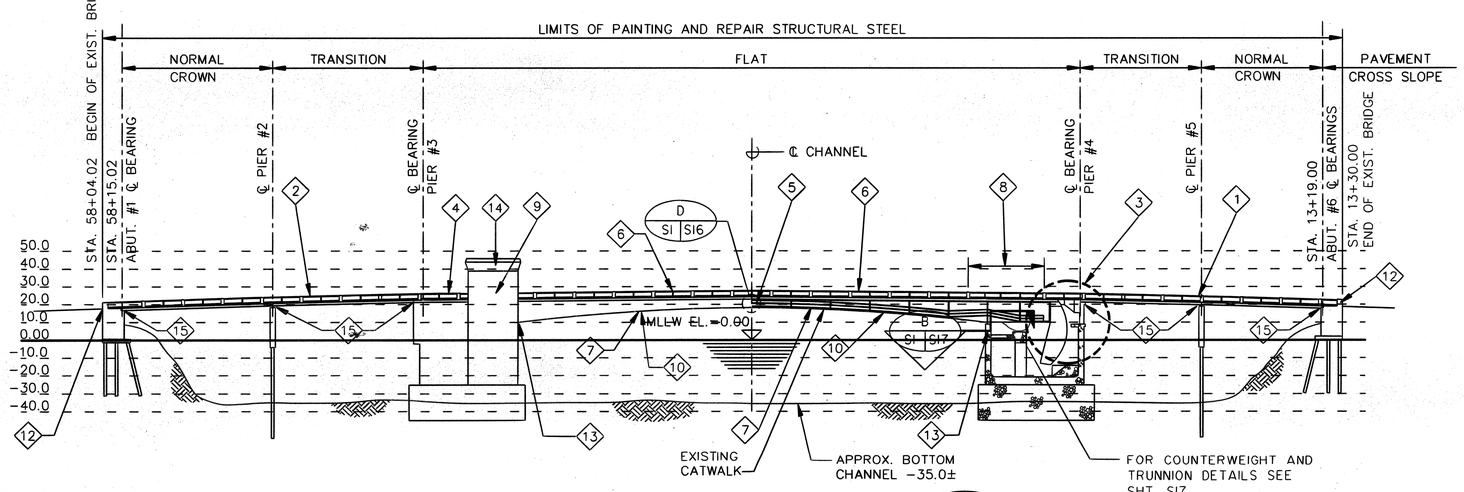

EXISTING BRIDGE ELEVATIONS (B / SI SI)

SCALE : 1" = 40'

(12) INDICATES WORK ITEM TO BE PERFORMED.

LIST OF WORK TO BE PERFORMED

(1) REMOVE CONCRETE DECK SLAB AT SAND ISLAND APPROACH & RECONSTRUCT. SEE S11, S10 & S6.

(2) REMOVE CONCRETE DECK SLAB AT NIMITZ APPROACH & RECONSTRUCT. SEE S11, S10 & S6.

(3) REPAIR SAND ISLAND COUNTERWEIGHT & POUR CONCRETE SLAB AT PIER 4. SEE S9, S16 & S17.

(4) REPAIR NIMITZ COUNTERWEIGHT & POUR CONCRETE SLAB AT PIER 4. SEE S16.

(5) LOCK CENTER HINGE AGAINST MOVEMENT. SEE S16.

(6) REPAIR EXISTING OPEN GRID BRIDGE DECK. WIDEN BRIDGE, ADD STEEL BEAM AND NEW STEEL DECK. SEE S2.

(7) REPAIR RUSTED AND/OR DETERIORATED STRUCTURE SEE S2, S3, S4, S5, S17, S18.

(8) REMOVE EXISTING CONC. FILLED OPEN GRID DECK FROM SAND ISLAND SECTION; REPLACE WITH CONC. DECK SLAB, WIDEN BRIDGE. SEE S2, S3, S7 & S13.

(9) REMOVE EXISTING CONC. FILLED OPEN GRID DECK FROM NIMITZ SECTION; REPLACE WITH CONC. DECK SLAB, WIDEN BRIDGE. SEE S2, S3, S7 & S13.

(10) ADD BRACING TO MAIN GIRDER SYSTEM SEE S8.

(11) JACKET PILES AND REPAIR FENDER SYSTEM. SEE S20.

(12) MODIFY EXISTING RAILING AND CONSTRUCT NEW END POST SEE S21.

(13) CLOSE TSUNAMI GATES SEE S17.

(14) BOARD WINDOWS AT EXISTING CONTROL ROOM, SEE S16.

(15) CONSTRUCT NEW END DIAPHRAGM AND RESTRAINERS.

ROSCOE O. FORD
REGISTERED PROFESSIONAL ENGINEER
No. 3731-S
HAWAII, U.S.A.

THIS WORK WAS PREPARED BY ME OR UNDER MY SUPERVISION

Roscoe O. Ford

ORIGINAL PLAN	SURVEY PLOTTED BY	DATE
	DRAWN BY	
	TRACED BY	
NOTEBOOK	DESIGNED BY	
	QUANTITIES BY	
No.	CHECKED BY	

DATE	REVISION

STATE OF HAWAII
DEPARTMENT OF TRANSPORTATION
HIGHWAYS DIVISION

GENERAL PLAN AND ELEVATION

SAND ISLAND BASCULE BRIDGE
REHABILITATION PHASE II
PROJECT NO. BR-064-1(3)

SCALE: AS NOTED DATE: AUG. 15, 1991

SHEET No. S1 OF S21 SHEETS

FED. ROAD DIST. NO.	STATE	FED. AID PROJ. NO.	FISCAL YEAR	SHEET NO.	TOTAL SHEETS
HAWAII	HAW.	BR-064-1(3)	1991	9	38

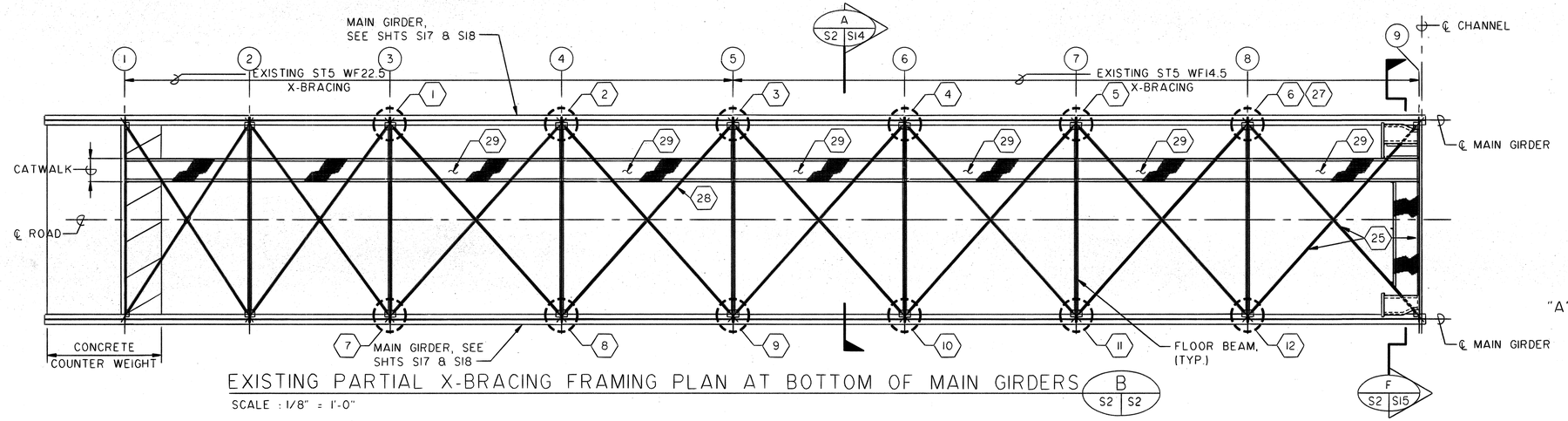

EXISTING PARTIAL X-BRACING FRAMING PLAN AT BOTTOM OF MAIN GIRDERS (B S2 | S2)

SCALE : 1/8" = 1'-0"

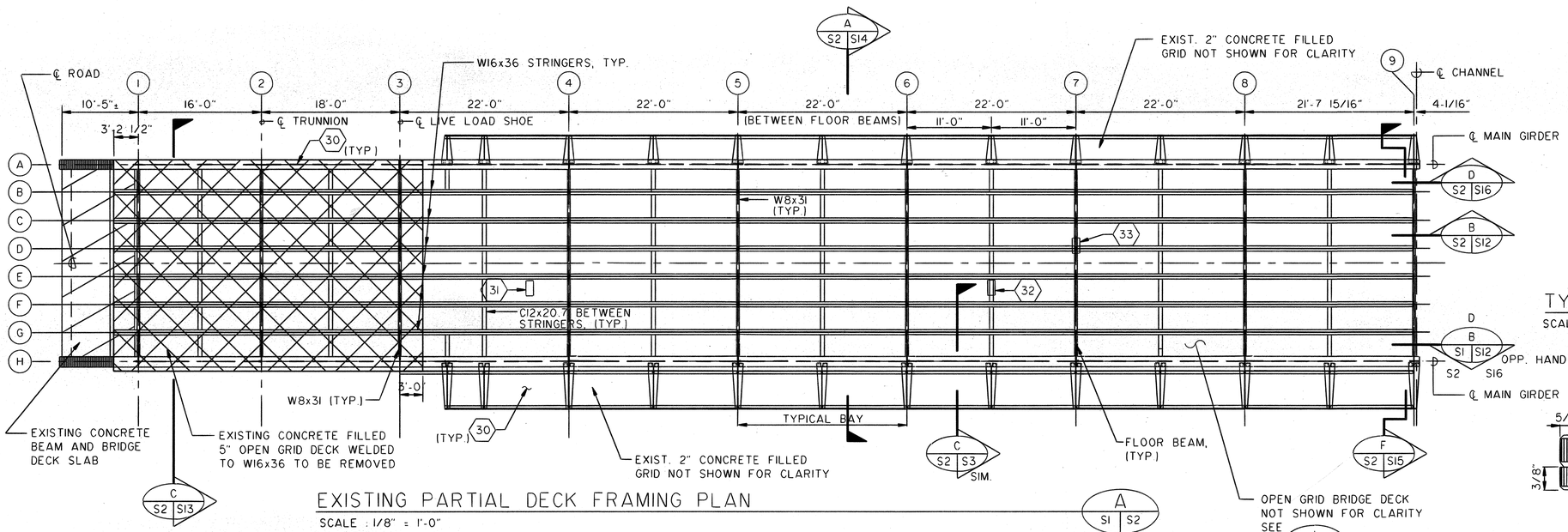

EXISTING PARTIAL DECK FRAMING PLAN (A S1 | S2)

SCALE : 1/8" = 1'-0"

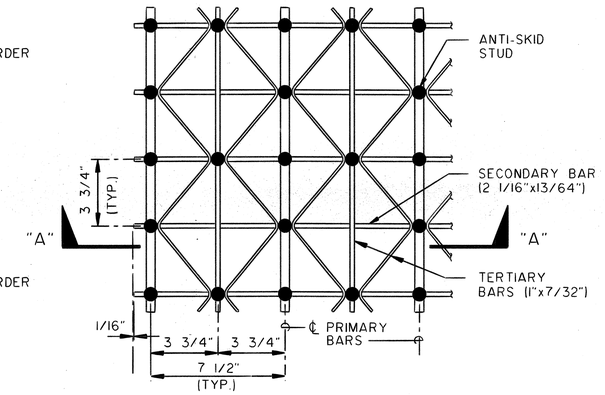

PLAN

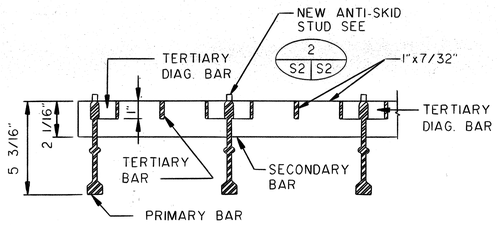

SECTION "A"-"A"

TYP. OPEN GRID BRIDGE DECK DET. (1 S2 | S2)

SCALE : 3" = 1'-0"

S3, S7

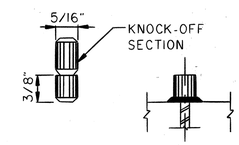

ANTI-SKID STUD DETAIL (2 S2 | S2)

SCALE : FULL

NOTES:

1. (26) SYMBOL MARK, FOR REPAIR LOCATIONS SEE SHT. S4 FOR REPAIR SCHEDULE.

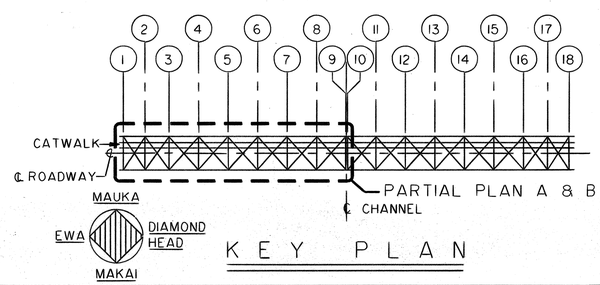

KEY PLAN

ROSCOE O. FORD
REGISTERED PROFESSIONAL ENGINEER
No. 3731-S
HAWAII, U.S.A.

THIS WORK WAS PREPARED BY ME OR UNDER MY SUPERVISION

Roscoe O. Ford

STATE OF HAWAII
DEPARTMENT OF TRANSPORTATION
HIGHWAYS DIVISION

EXISTING PARTIAL FRAMING PLANS AND LOCATIONS
BASCULE BRIDGE SPAN
SAND ISLAND BASCULE BRIDGE
REHABILITATION PHASE II
PROJECT NO. BR-064-1(3)

SCALE: AS NOTED DATE: AUG. 15, 1991

SHEET No. S2 OF S21 SHEETS

DATE	REVISION

ORIGINAL PLAN | SURVEY PLOTTED BY | DRAWN BY | TRACED BY | DESIGNED BY | QUANTITIES BY | CHECKED BY | DATE | NOTEBOOK No.

FED. ROAD DIST. NO.	STATE	FED. AID PROJ. NO.	FISCAL YEAR	SHEET NO.	TOTAL SHEETS
HAWAII	HAW.	BR-064-1(3)	1991	10	38

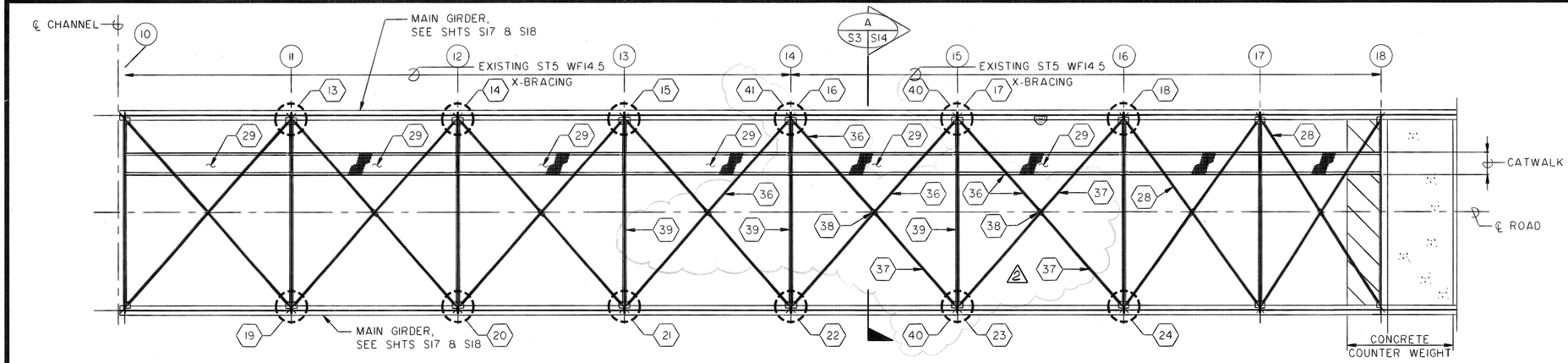

EXIST. PARTIAL X-BRACING FRAMING PLAN AT BOTTOM OF MAIN GIRDERS (B / S3 S3)

SCALE : 1/8" = 1'-0"

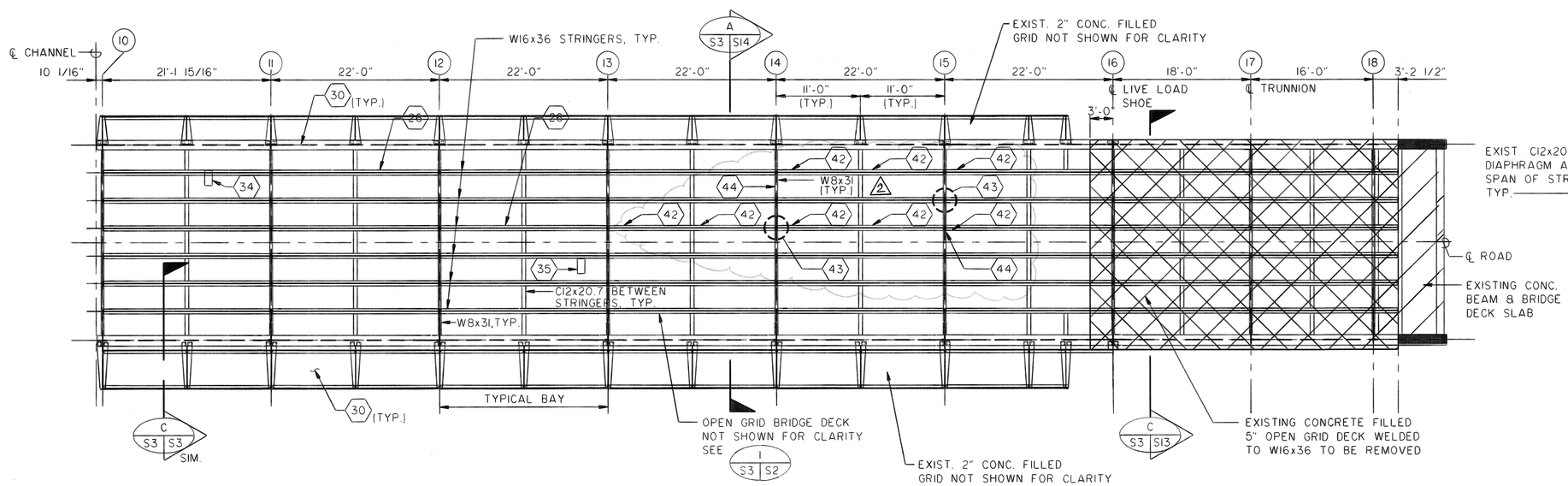

EXIST. PARTIAL DECK FRAMING PLAN (A / S1 S3)

SCALE : 1/8" = 1'-0"

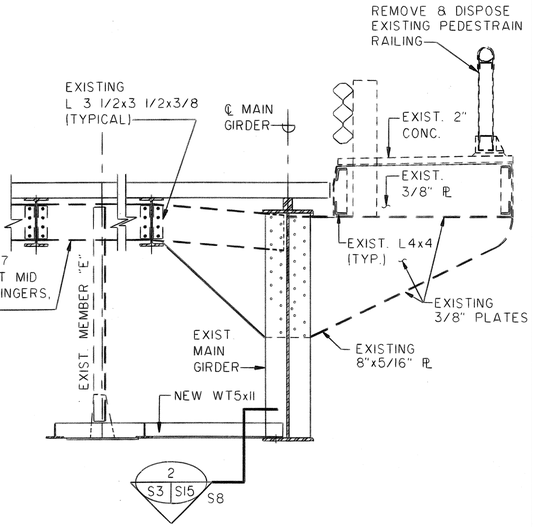

SECTION AT DIAPHRAGM (C / S3 S3)

SCALE : 1/2"=1'-0"

S2, S18, S8

NOTES:

1. (26) SYMBOL MARK, FOR REPAIR LOCATIONS SEE SHT. S4 FOR REPAIR SCHEDULE.

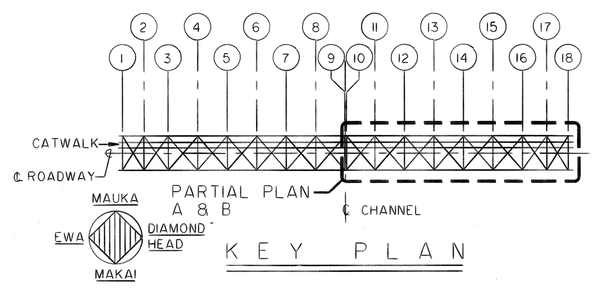

KEY PLAN

DATE	REVISION
2 5/4/92	ADDED REPAIR SYMBOLS

ROSCOE O. FORD REGISTERED PROFESSIONAL ENGINEER No. 3731-S HAWAII, U.S.A.

THIS WORK WAS PREPARED BY ME OR UNDER MY SUPERVISION

Roscoe O Ford

STATE OF HAWAII
DEPARTMENT OF TRANSPORTATION
HIGHWAYS DIVISION

EXIST. PART. FRAMING PLANS AND REPAIR LOCATIONS
BASCULE BRIDGE SPAN
SAND ISLAND BASCULE BRIDGE
REHABILITATION PHASE II
PROJECT NO. BR-064-1(3)

SCALE: AS NOTED DATE: MARCH 1991

SHEET No. S3 OF S21 SHEETS

ORIGINAL PLAN | NOTEBOOK No. | SURVEY PLOTTED BY | DRAWN BY | TRACED BY | DESIGNED BY | QUANTITIES BY | CHECKED BY | DATE

C O 10

REPAIR SCHEDULE

FED. ROAD DIST. NO.	STATE	FED. AID PROJ. NO.	FISCAL YEAR	SHEET NO.	TOTAL SHEETS
HAWAII	HAW.	BR-064-1(3)	1991	11	38

MARK	DESCRIPTION OF REPAIRS	DETAIL
1	REMOVE AND REPLACE EXISTING RUST DAMAGED BOLTS: NOS. 5, 13, 23, 24, 25, 28, 60, 61, 62, 63, 77 & 89.	B&D S4 S5
2	REMOVE AND REPLACE EXISTING RUST DAMAGED BOLTS: NOS. 5, 6, 13, 23, 24, 25, 26, 27, 28, 57, 58, 59, 60, 61, 62, 63, 77 & 89.	B&D S4 S5
3	REMOVE AND REPLACE EXISTING RUST DAMAGED BOLTS: NOS. 5, 6, 13, 23, 24, 25, 26, 51, 52, 53, 57, 58, 59, 60, 61, 62, 63, 77 & 89.	B&D S4 S5
4	REMOVE AND REPLACE EXISTING RUST DAMAGED BOLTS: NOS. 5, 13, 14, 23, 24, 25, 26, 57, 58, 59, 60, 61, 62, 63, 77 & 89.	B S4 S5
5	REMOVE AND REPLACE EXISTING RUST DAMAGED BOLTS: NOS. 5, 13, 14, 23, 24, 25, 26, 52, 53, 57, 58, 59, 60, 61, 77 & 89.	B&D S4 S5
6	REMOVE AND REPLACE EXISTING RUST DAMAGED BOLTS: NOS. 5, 6, 13, 23, 24, 25, 51, 52, 57, 58, 59, 60, 61, 77 & 89.	B&D S4 S5
7	REMOVE AND REPLACE EXISTING RUST DAMAGED BOLTS: NOS. 4, 22, 57, 58, 59, 60, 61, 62, 63 & 77.	A&C S4 S5
8	REMOVE AND REPLACE EXISTING RUST DAMAGED BOLTS: NOS. 17, 18, 19, 20, 21, 57, 58, 59, 60, 61, 62 & 63.	A&C S4 S5
9	REMOVE AND REPLACE EXISTING RUST DAMAGED BOLTS: NOS. 4, 19, 20, 21, 57, 58, 59, 60, 61, 77 & 89.	A&C S4 S5
10	REMOVE AND REPLACE EXISTING RUST DAMAGED BOLTS: NOS. 4, 77 & 89.	A&C S4 S5
11	REMOVE AND REPLACE EXISTING RUST DAMAGED BOLTS: NOS. 4, 77 & 89.	A&C S4 S5
12	REMOVE AND REPLACE EXISTING RUST DAMAGED BOLTS: NOS. 2, 3, 4, 12, 77 & 89.	A&C S4 S5
13	REMOVE AND REPLACE EXISTING RUST DAMAGED BOLTS: NOS. 3, 4, 12, 17, 18, 19, 46, 61, 62, 77 & 89.	B&D S4 S5
14	REMOVE AND REPLACE EXISTING RUST DAMAGED BOLTS: NOS. 2, 3, 4, 10, 11, 12, 17, 18, 19, 20, 30, 31, 45, 46, 57, 58, 59, 60, 61, 62 & 63.	B&D S4 S5
15	REMOVE AND REPLACE EXISTING RUST DAMAGED BOLTS: NOS. 2,3,4,5,6,10,11,12,17,18,19,20,23,24,25,26,30,31,45,46,53, 57,58,59,60,61,62,63,77 & 89.	B&D S4 S5
16	REMOVE AND REPLACE EXISTING RUST DAMAGED BOLTS: NOS. 5, 13, 17, 18, 19, 20, 23, 24, 25, 26, 29, 30, 31, 32, 43, 44, 45, 57, 58, 59, 60, 61, 62, 63, 77 & 89.	B&D S4 S5
17	REMOVE AND REPLACE EXISTING RUST DAMAGED BOLTS: NOS. 2,3,4,10,11,12,17,18,19,20,21,22,23,24,25,26,27,28,29,30,31, 32,33,44,45,46,47,57,58,59,60,61,62,63,77 & 89.	B&D S4 S5
18	REMOVE AND REPLACE EXISTING RUST DAMAGED BOLTS: NOS. 3, 4, 12, 17, 18, 19, 20, 21, 22, 29, 30, 31, 33, 57, 58, 59, 60, 61, 62, 63, 77 & 89.	B&D S4 S5
19	REMOVE AND REPLACE EXISTING RUST DAMAGED BOLTS: NOS. 3, 4, 12, 63, 77 & 89.	A&C S4 S5
20	REMOVE AND REPLACE EXISTING RUST DAMAGED BOLTS: NOS. 2, 3, 4, 12, 17, 18, 19, 77 & 89.	A&C S4 S5
21	REMOVE AND REPLACE EXISTING RUST DAMAGED BOLTS: NOS. 4, 12, 77 & 89.	A&C S4 S5
22	REMOVE AND REPLACE EXISTING RUST DAMAGED BOLTS: NOS. 3, 4, 12,17, 19, 20, 61, 62, 63, 77 & 89.	A&C S4 S5
23	REMOVE AND REPLACE EXISTING RUST DAMAGED BOLTS: NOS. 3, 4, 12, 17, 18, 19, 20, 21, 22, 57, 58, 59, 60, 61, 62, 63, 77 & 89.	A&C S4 S5
24	REMOVE AND REPLACE EXISTING RUST DAMAGED BOLTS: NOS. 17, 18, 19, 20, 21, 61, 62, 63, 77 & 89.	A&C S4 S5
25	NOT USED	
26	PATCH HOLE WITH WELD ON PLATE AND PAINT TO MINIMIZE FUTURE RUST DAMAGE.	E S4 S5
27	PATCH HOLE WITH WELD ON PLATE AND PAINT TO MINIMIZE FUTURE RUST DAMAGE.	H S4 S5
28	PATCH HOLE WITH WELD ON PLATE AND PAINT TO MINIMIZE FUTURE RUST DAMAGE.	F S4 S5
29	REMOVE EXISTING CATWALK STEEL GRATING AND REPLACE. REPLACE CATWALK GRATING BETWEEN FLOOR BEAM LINES 3 THRU 16.	A S4 S14
30	DEMOLISH AND REMOVE EXISTING SIDEWALK AND CURB.	A S4 S14
31	REPAIR OPEN GRID FLOOR-WELD NEW 1"x7/32"x1'-6", 1"x7/32"x1'-3", 5-1"x7/32"x0'-5" AND 2-1/16"x13/64"x1'-7". RESET 2 PIECES AND WELD.	SEE NOTE 1 THIS SHEET
32	REPAIR OPEN GRID FLOOR-WELD NEW 1"x7/32"x1'-0" PLATE.	SEE NOTE 1 THIS SHEET
33	REPAIR OPEN GRID FLOOR-WELD NEW 1"x7/32"x2'-6" PLATE.	SEE NOTE 1 THIS SHEET
34	REPAIR OPEN GRID FLOOR-WELD NEW 1"x7/32"x0'-8" PLATE.	SEE NOTE 1 THIS SHEET
35	REPAIR OPEN GRID FLOOR-WELD NEW 1"x7/32"x1'-2" AND 3'-1"x7/32"x0'-5" PLATES.	SEE NOTE 1 THIS SHEET
36	REPLACE WT WITH NEW WT 5x22.5	
37	WELD PLATE TO WT WEB	J S4 S5
38	REPLACE VERTICAL GUSSET PLATE AT CROSS CONNECTION	A S4 S5A
39	REPLACE DOUBLE ANGLE FULL LENGTH	
40	REPLACE 3/8 INCH THICK GUSSET PLATE 2	D S4 S5
41	CUT AND REMOVE BOTTOM 6" OF 3/8 INCH GUSSET PLATE AND REPLACE WITH SAME, BUTT WELDED TO REMAINING PLATE	B S4 S5
42	ADD L6x3 1/2x1/4 PLATE ONE SIDE OF TOTAL LENGTH OF STEEL BEAM WEB AND 3 FEET LONG OPPOSITE SIDE AT CONNECTION TO FLOOR BEAM EACH SIDE OF CONNECTION	K S4 S5; C S4 S5A
43	ADD L4x3x1/4x3'-0" TWO SIDES OF STEEL BEAM WEB	K S4 S5; C S4 S5A
44	ADD L4x3x1/4x3'-0" TWO SIDES OF W8x31	D S4 S5A

NOTES:
1. FIELD VERIFY CONFIGURATION OF BAR ARRANGEMENT FOR REPAIR. PRIOR TO FABRICATION SEE 1 S2 S2 FOR TYPICAL DECK DETAIL.
2. WORK INDICATED ON THIS SHEET TO BE PAID FOR UNDER PAY ITEM 501.0200 STRUCTURAL STEEL.

DATE	REVISION
2 5/4/92	ADDED REPAIRS TO SCHEDULE

ROSCOE O. FORD
REGISTERED PROFESSIONAL ENGINEER
No. 3731-S
HAWAII, U.S.A.

THIS WORK WAS PREPARED BY ME OR UNDER MY SUPERVISION
Roscoe O. Ford

STATE OF HAWAII
DEPARTMENT OF TRANSPORTATION
HIGHWAYS DIVISION

REPAIR SCHEDULE

SAND ISLAND BASCULE BRIDGE
REHABILITATION PHASE II
PROJECT NO. BR-064-1(3)

SCALE: AS NOTED DATE: MARCH 1991

SHEET No. S4 OF S21 SHEETS

ORIGINAL PLAN | SURVEY PLOTTED BY | TRACED BY | DESIGNED BY | QUANTITIES BY | CHECKED BY | DATE
NOTEBOOK No.

C.O. 11

FED. ROAD DIST. NO.	STATE	FED. AID PROJ. NO.	FISCAL YEAR	SHEET NO.	TOTAL SHEETS
HAWAII	HAW.	BR-064-1(3)	1991	12	38

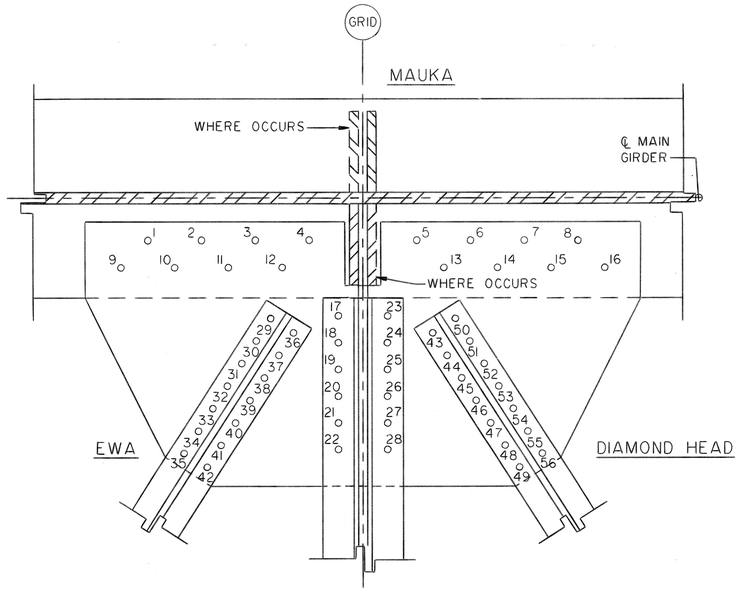

PLAN - SECTION B (S4 | S5)
SCALE : 1 1/2" = 1'-0"

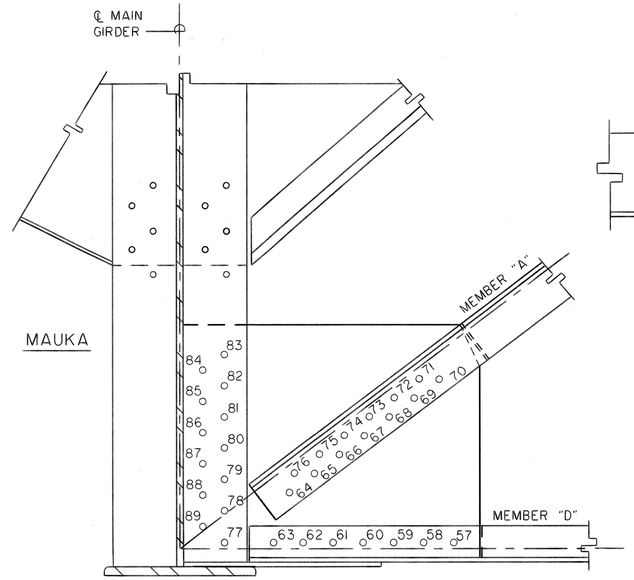

ELEVATION - SECTION D (S4 | S5)
SCALE : 1 1/2" = 1'-0"

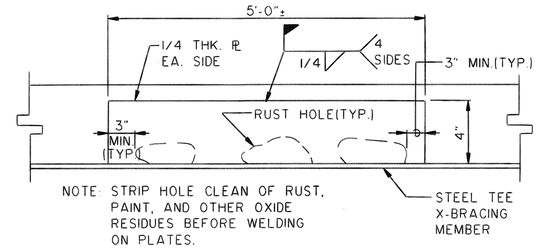

NOTE: STRIP HOLE CLEAN OF RUST, PAINT, AND OTHER OXIDE RESIDUES BEFORE WELDING ON PLATES.

REPAIR DETAIL-ELEVATION H (S4 | S5)
NO SCALE

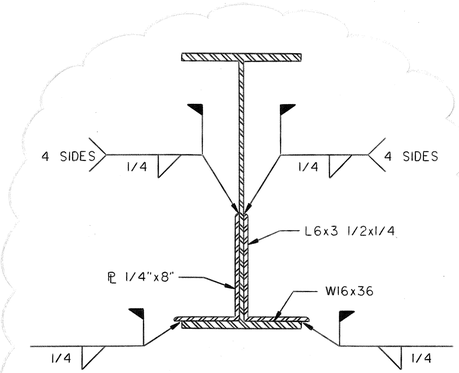

REPAIR DETAIL-ELEVATION K (S4 | S5)
NO SCALE

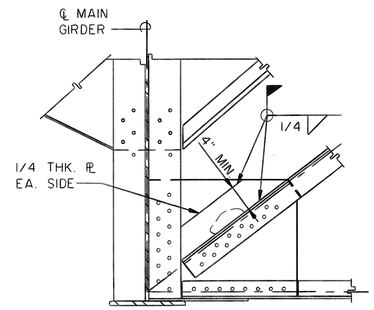

NOTE: STRIP HOLE CLEAN OF RUST, PAINT, AND OTHER OXIDE RESIDUES BEFORE WELDING ON PLATES.

REPAIR DETAIL-ELEVATION F (S4 | S5)
SCALE : 3/4" = 1'-0"

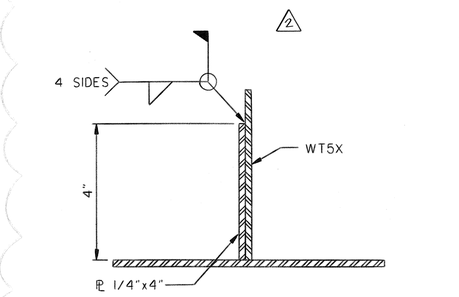

REPAIR DETAIL-ELEVATION J (S4 | S5)
NO SCALE

NOTE: ALL BOLTS 7/8"Φ ASTM A325, GALVANIZED HIGH STRENGTH BOLTS.

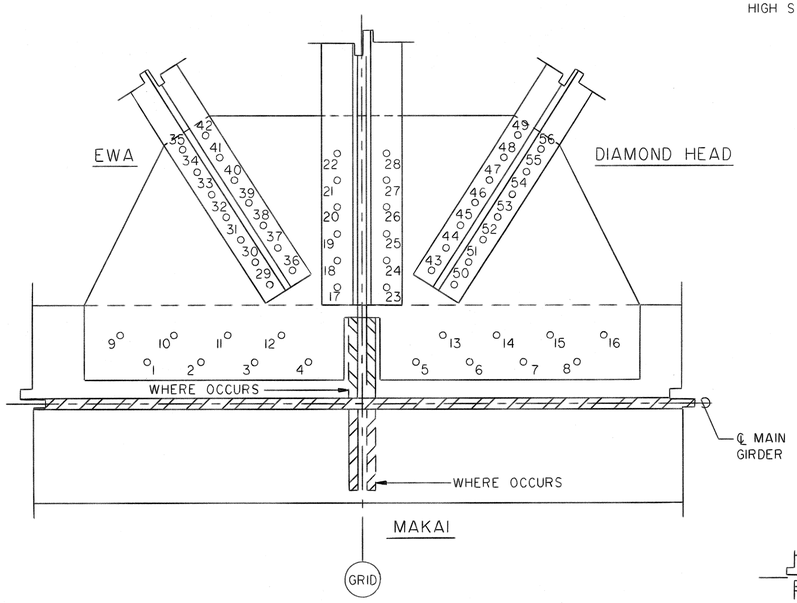

PLAN - SECTION A (S4 | S5)
SCALE : 1 1/2" = 1'-0"

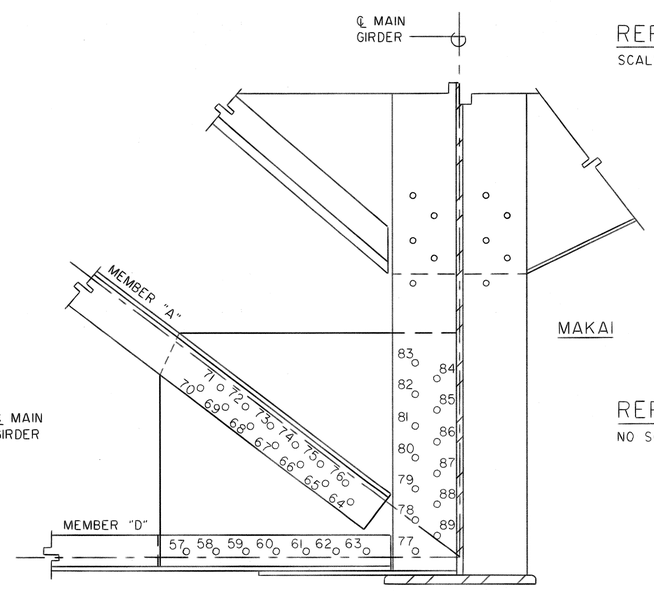

ELEVATION - SECTION C (S4 | S5)
SCALE : 1 1/2" = 1'-0"

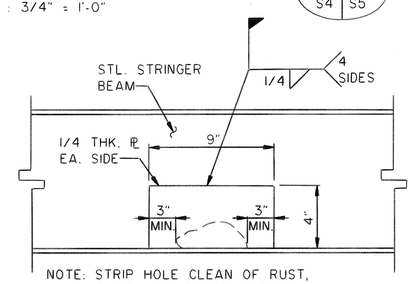

NOTE: STRIP HOLE CLEAN OF RUST, PAINT, AND OTHER OXIDE RESIDUES BEFORE WELDING ON PLATES.

REPAIR DETAIL-ELEVATION E (S4 | S5)
NO SCALE

DATE	REVISION
2 5/4/92	ADDED DETAILS

ROSCOE O. FORD
REGISTERED PROFESSIONAL ENGINEER
No. 3731-S
HAWAII, U.S.A.

THIS WORK WAS PREPARED BY ME OR UNDER MY SUPERVISION
Roscoe O. Ford

STATE OF HAWAII
DEPARTMENT OF TRANSPORTATION
HIGHWAYS DIVISION

JOINT AND REPAIR DETAILS

SAND ISLAND BASCULE BRIDGE
REHABILITATION PHASE II
PROJECT NO. BR-064-1(3)

SCALE: AS NOTED DATE: MARCH 1991

SHEET No. S5 OF S21 SHEETS

ORIGINAL PLAN | SURVEY PLOTTED BY | TRACED BY | DESIGNED BY | NOTEBOOK | QUANTITIES BY | CHECKED BY | DATE | No.

C.O. 12

FED. ROAD DIST. NO.	STATE	FED. AID PROJ. NO.	FISCAL YEAR	SHEET NO.	TOTAL SHEETS
HAWAII	HAW.	BR-064-1(3)	1991	12	38

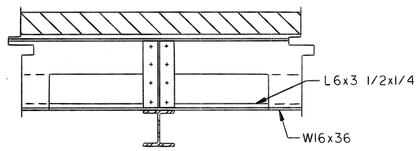

SECTION C (S4 | S5A)
SCALE : 3/4" = 1'-0"

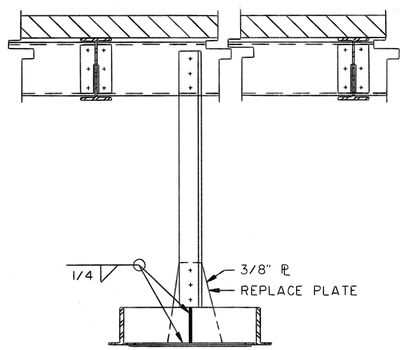

SECTION B (S4 | S5A)
SCALE : 3/4" = 1'-0"

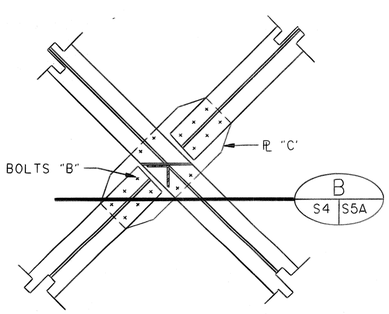

PLAN - SECTION A (S4 | S5A)
SCALE : 3/4" = 1'-0"

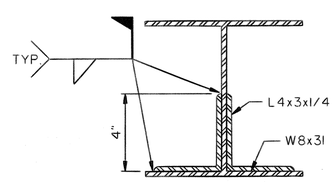

SECTION D (S4 | S5A)
NO SCALE

DATE	REVISION
2 5/4/92	ADDED THIS SHEET

ROSCOE O. FORD
REGISTERED PROFESSIONAL ENGINEER
No. 3731-S
HAWAII, U.S.A.

THIS WORK WAS PREPARED BY ME OR UNDER MY SUPERVISION
Roscoe O. Ford

STATE OF HAWAII
DEPARTMENT OF TRANSPORTATION
HIGHWAYS DIVISION

JOINT AND REPAIR DETAILS

SAND ISLAND BASCULE BRIDGE
REHABILITATION PHASE II
PROJECT NO. BR-064-1(3)

SCALE: AS NOTED DATE: MARCH 1991

SHEET No. S5A OF S21 SHEETS

ORIGINAL PLAN
NOTEBOOK No.
SURVEY PLOTTED BY DATE
DRAWN BY
TRACED BY
DESIGNED BY
QUANTITIES BY
CHECKED BY

C.O. 12 S-1

FED. ROAD DIST. NO.	STATE	FED. AID PROJ. NO.	FISCAL YEAR	SHEET NO.	TOTAL SHEETS
HAWAII	HAW.	BR-064-1(3)	1991	13	38

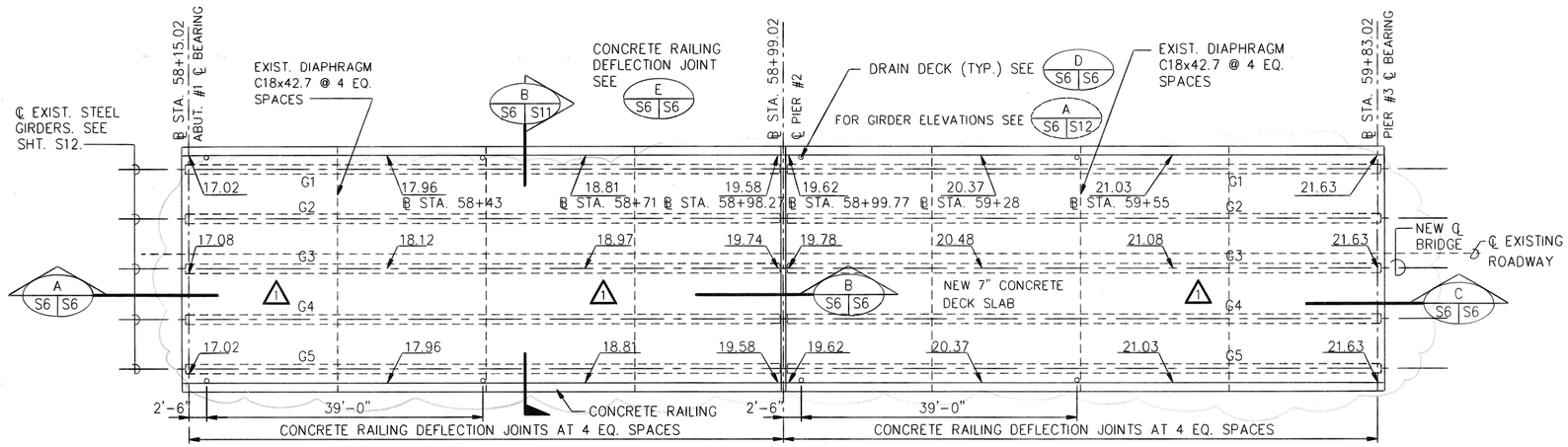

PLAN - FINISH GRADES AT NIMITZ APPROACH
SCALE: 1" = 10'-0"

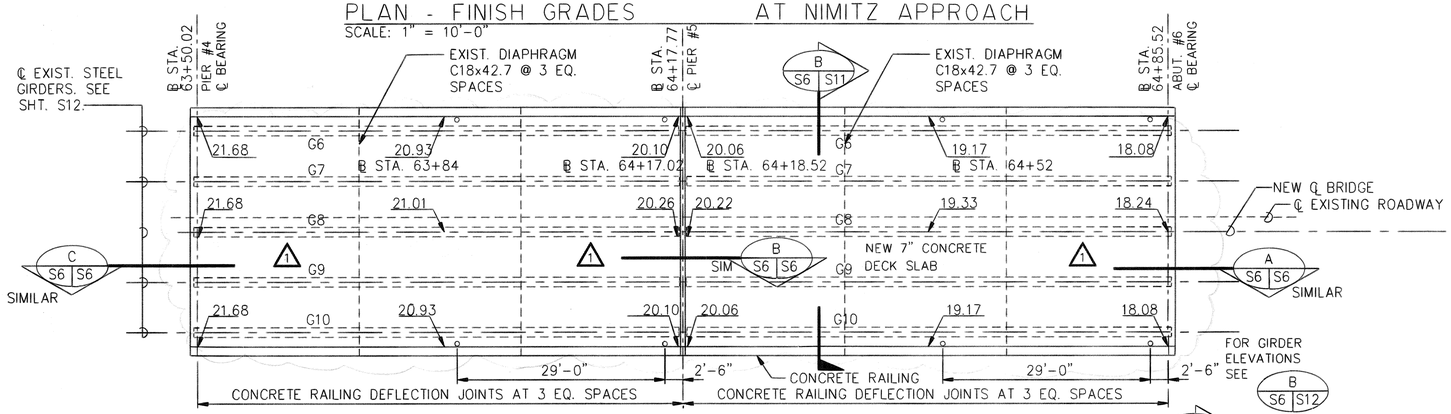

PLAN - FINISH GRADES SAND ISLAND APPROACH
SCALE: 1" = 10'-0"

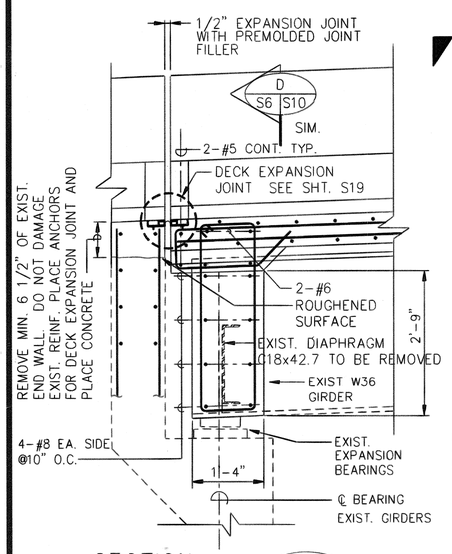

SECTION A
SCALE : 3/4" = 1'-0" S6 S6 S10

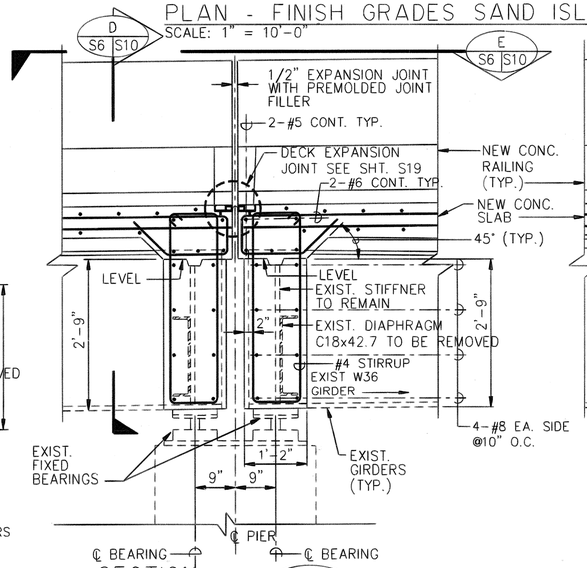

SECTION B
SCALE : 3/4" = 1'-0" S6 S6 S10

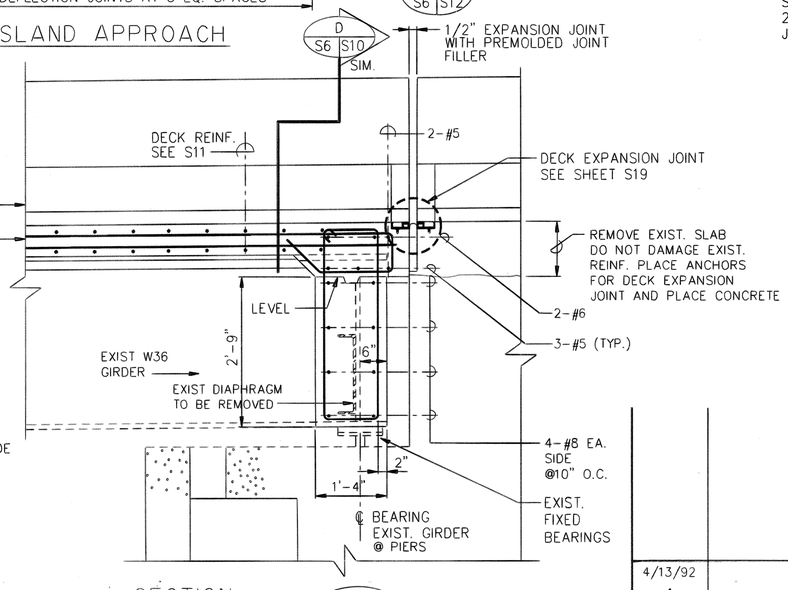

SECTION C
SCALE : 3/4" = 1'-0" S6 S6 S16

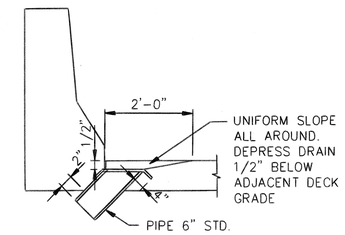

SECTION AT CONC. RAILING F S6 S6
NO SCALE

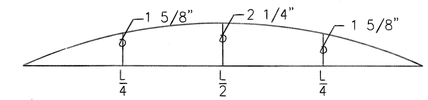

G-1 TO G-5

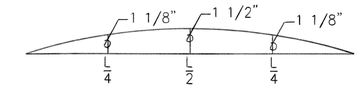

G-6 TO G-10

ORIGINAL CAMBER DIAGRAMS G S6 S6
NO SCALE

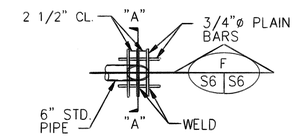

PLAN

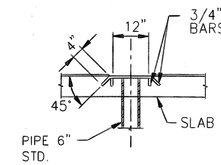

SECTION "A-A"

NOTES:
DECK DRAIN INCIDENTAL TO CONCRETE IN APPROACH SPANS.

TYPICAL DECK DRAIN DETAILS D S6 S6 S11
SCALE : 1/2" = 1'-0"

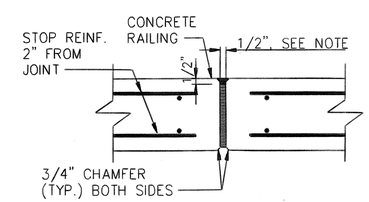

NOTE:
1/2" PREMOLDED JOINT FILLER WITH 1/2" JOINT SEALER AT COMCRETE RAILING DEFLECTION JOINT. 3/4" PREMOLDED JOINT FILLER AT DECK EXPANSION JOINT.

CONCRETE RAILING DEFLECTION JOINT E S6 S6
SCALE : 3" = 1'-0"

ROSCOE O. FORD
REGISTERED PROFESSIONAL ENGINEER
No. 3731-S
HAWAII, U.S.A.

THIS WORK WAS PREPARED BY ME OR UNDER MY SUPERVISION
Roscoe O. Ford

DATE	REVISION
4/13/92 1	REVISED GRADES

STATE OF HAWAII
DEPARTMENT OF TRANSPORTATION
HIGHWAYS DIVISION

FINISHED APPROACH SPANS
FRAMING PLANS AND DECK ELEVATIONS
SAND ISLAND BASCULE BRIDGE
REHABILITATION PHASE II
PROJECT NO. BR-064-1(3)

SCALE: AS NOTED DATE: MARCH 1991

SHEET No. S6 OF S21 SHEETS

ORIGINAL PLAN | SURVEY PLOTTED BY | DRAWN BY | TRACED BY | DESIGNED BY | QUANTITIES BY | CHECKED BY | DATE | NOTEBOOK | No.

C.O.13

FED. ROAD DIST. NO.	STATE	FED. AID PROJ. NO.	FISCAL YEAR	SHEET NO.	TOTAL SHEETS
HAWAII	HAW.	BR-064-1(3)	1991	14	38

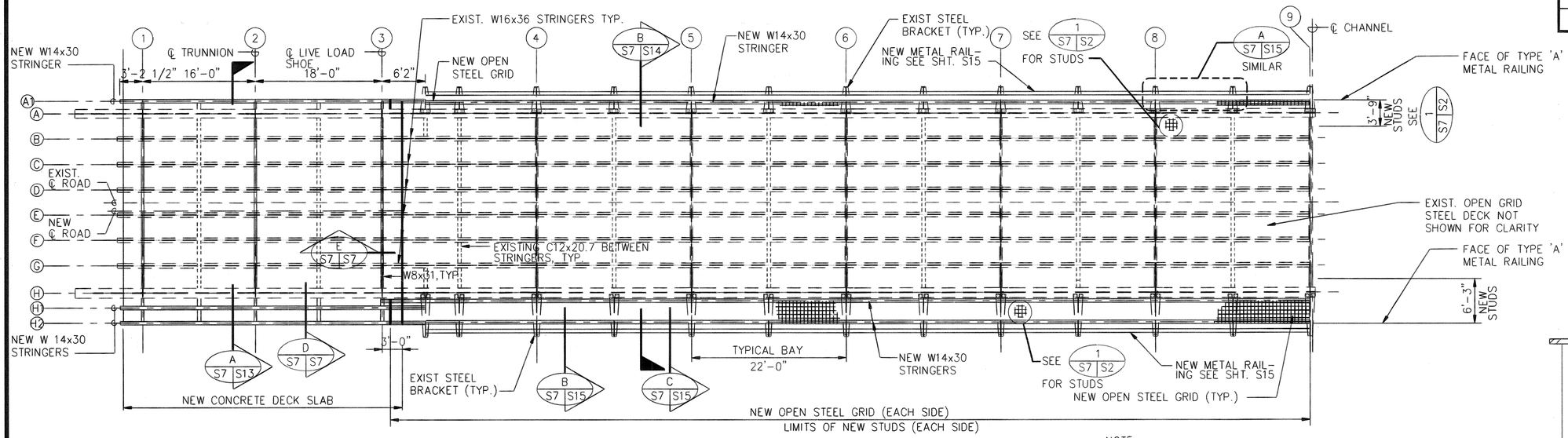

NEW DECK FRAMING PLAN - NIMITZ SIDE OF BASCULE BRIDGE SPAN (A / S7 S7)

SCALE : 1/8" = 1'-0"

NOTE:
EXISTING MEMBERS INDICATED WITH DASHED LINES.

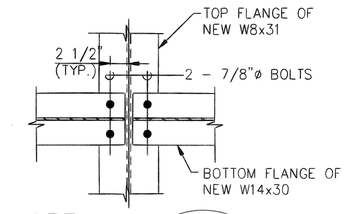

DETAIL C (S7 S7)

SCALE : NONE

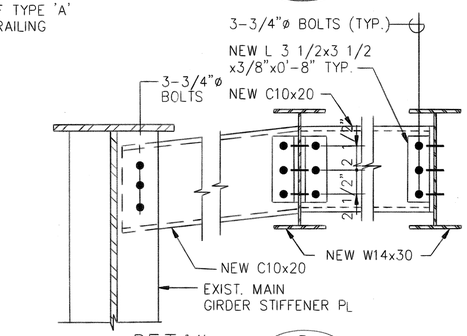

DETAIL D (S7 S7)

SCALE : NONE

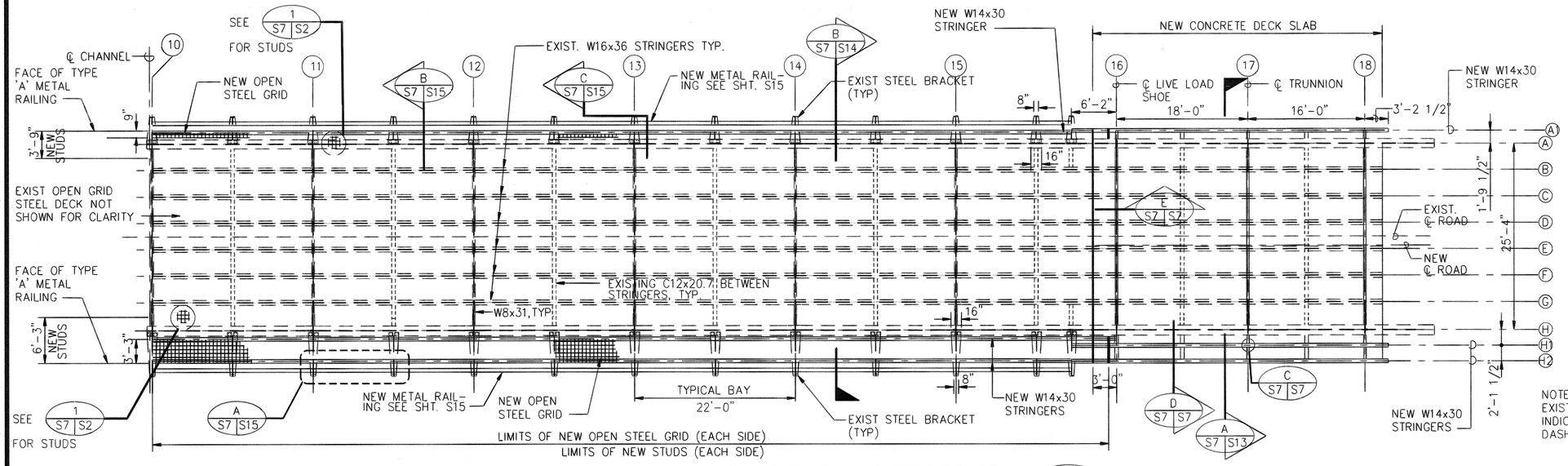

NEW DECK FRAMING PLAN - SAND ISLAND SIDE OF BASCULE BRIDGE SPAN (B / S7 S7)

SCALE : 1/8" = 1'-0"

NOTE:
EXISTING MEMBERS INDICATED WITH DASHED LINES.

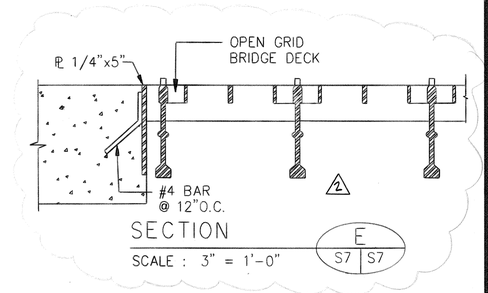

SECTION E (S7 S7)

SCALE : 3" = 1'-0"

ROSCOE O. FORD
REGISTERED PROFESSIONAL ENGINEER
No. 3731-S
HAWAII, U.S.A.

THIS WORK WAS PREPARED BY ME OR UNDER MY SUPERVISION

Roscoe O. Ford

DATE	REVISION
5/1/92 (2)	ADDED DETAIL

STATE OF HAWAII
DEPARTMENT OF TRANSPORTATION
HIGHWAYS DIVISION

FINISHED PARTIAL FRAMING PLANS, BASCULE BRIDGE SPAN

SAND ISLAND BASCULE BRIDGE REHABILITATION PHASE II

PROJECT NO. BR-064-1(3)

SCALE: AS NOTED DATE: MARCH 1991

SHEET No. S7 OF S21 SHEETS

ORIGINAL PLAN | SURVEY PLOTTED BY | DRAWN BY | TRACED BY | DESIGNED BY | QUANTITIES BY | CHECKED BY | DATE | NOTEBOOK | No.

C.O. 14

FED. ROAD DIST. NO.	STATE	FED. AID PROJ. NO.	FISCAL YEAR	SHEET NO.	TOTAL SHEETS
HAWAII	HAW.	BR-064-1(3)	1991	15	38

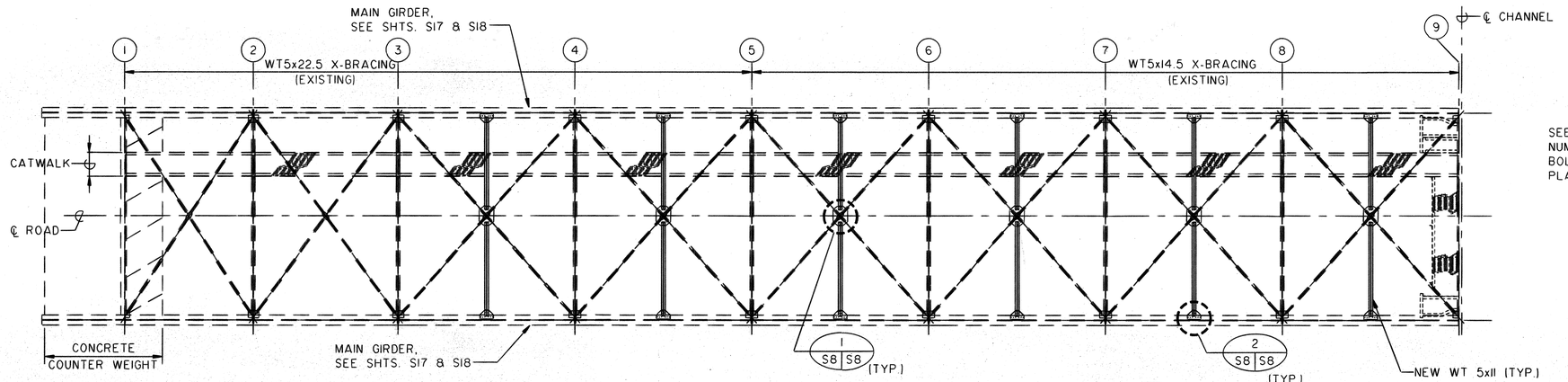

PARTIAL X-BRACING FRAMING PLAN AT BOTTOM OF MAIN GIRDERS (A S8 S8)

SCALE : 1/8" = 1'-0"

NOTE: EXISTING MEMBERS INDICATED WITH DASHED LINES.

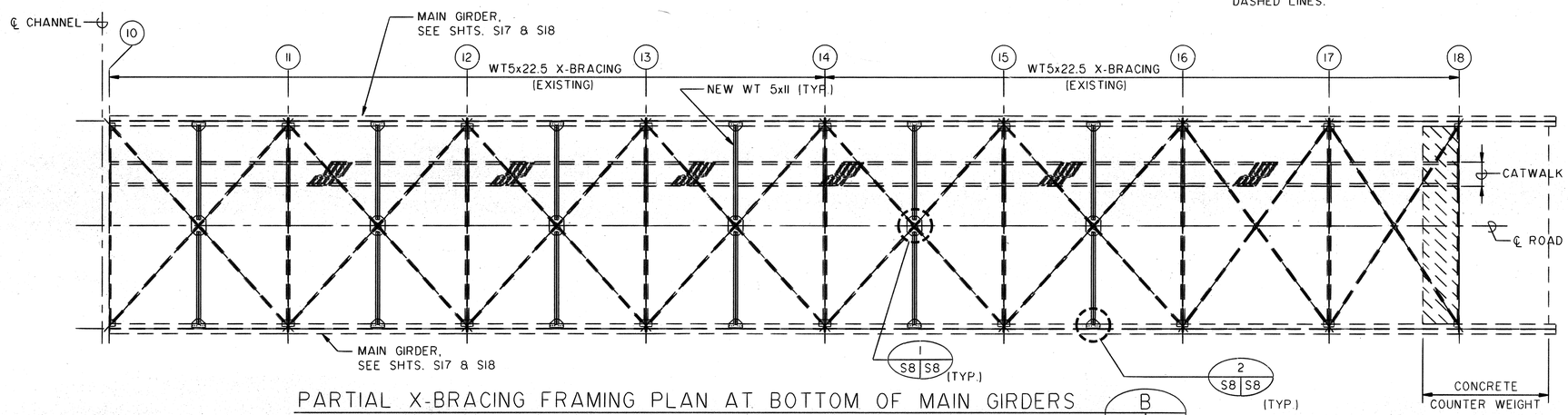

PARTIAL X-BRACING FRAMING PLAN AT BOTTOM OF MAIN GIRDERS (B S8 S8)

SCALE : 1/8" = 1'-0"

NOTE: EXISTING MEMBERS INDICATED WITH DASHED LINES.

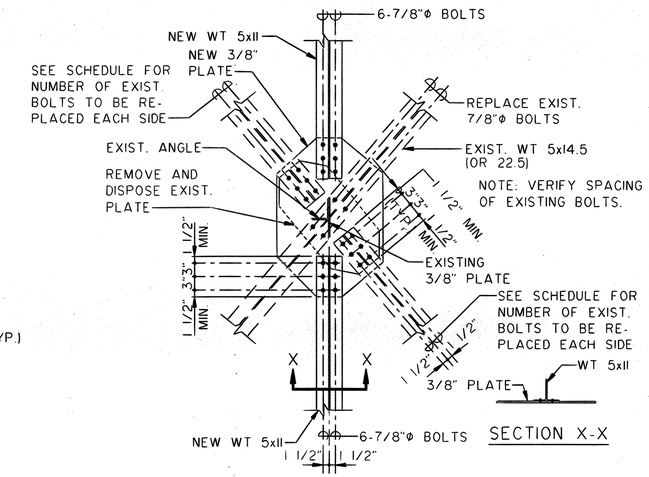

DETAIL - CONNECTION (1 S8 S8)

SCALE : 3/4" = 1'-0"

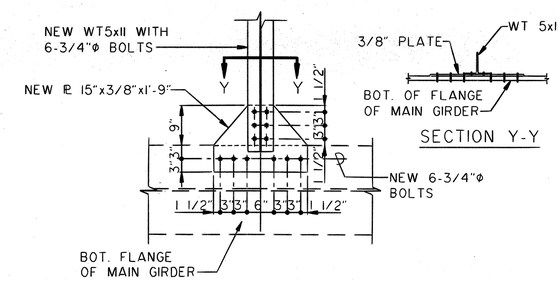

DETAIL - CONNECTION (2 S3 S8 S8)

SCALE : 3/4" = 1'-0"

NOTES:

1. (26) SYMBOL MARK, SEE SHT. S4 FOR REPAIR SCHEDULE

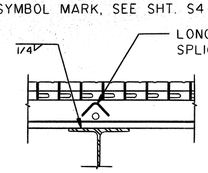

SECTION (E S8 S8)

SCALE : 1 1/2" = 1'-0"

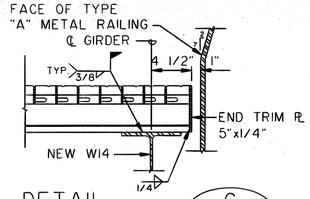

DETAIL (C S14 S8)

SCALE : 1 1/2" = 1'-0"

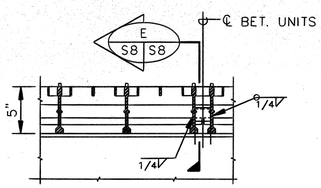

SECTION (D S14 S8)

SCALE : 1 1/2" = 1'-0"

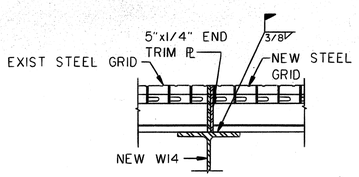

DETAIL (F S14 S8)

SCALE : 1 1/2" = 1'-0"

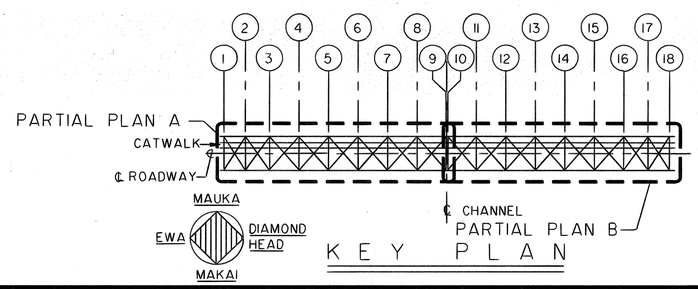

KEY PLAN

BOLT REPLACEMENT SCHEDULE

LOCATION	NO. BOLTS	SIZE
3-4, 15-16	12	7/8"Φ
4-5, 14-15	10	7/8"Φ
5-6, 13-14	8	7/8"Φ
6-7, 12-13	6	7/8"Φ
7-8, 11-12	6	7/8"Φ
8-9, 10-11	6	7/8"Φ

ROSCOE O. FORD
REGISTERED PROFESSIONAL ENGINEER
No. 3731-S
HAWAII, U.S.A.

THIS WORK WAS PREPARED BY ME OR UNDER MY SUPERVISION

Roscoe O. Ford

STATE OF HAWAII
DEPARTMENT OF TRANSPORTATION
HIGHWAYS DIVISION

PARTIAL FRAMING PLANS
ADDED BRACING SECTION AND
DETAILS, BASCULE BRIDGE SPAN
SAND ISLAND BASCULE BRIDGE
REHABILITATION PHASE II
PROJECT NO. BR-064-1(3)

SCALE: AS NOTED DATE: AUG. 15, 1991

SHEET No. S8 OF S21 SHEETS

DATE	REVISION

ORIGINAL PLAN | SURVEY PLOTTED BY | DRAWN BY | TRACED BY | DESIGNED BY | NOTEBOOK | QUANTITIES BY | CHECKED BY | DATE | No.

FED. ROAD DIST. NO.	STATE	FED. AID PROJ. NO.	FISCAL YEAR	SHEET NO.	TOTAL SHEETS
HAWAII	HAW.	BR-064-1(3)	1991	16	38

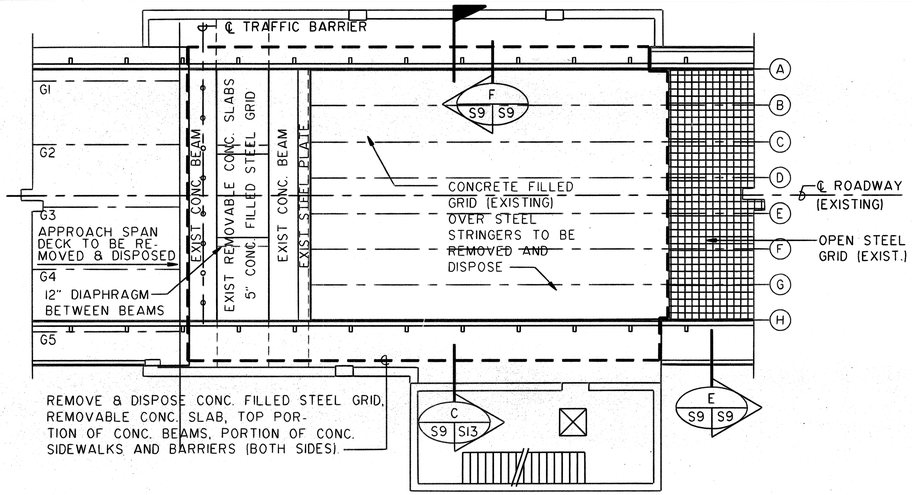

DEMOLITION PLAN OF EXIST ROADWAY AT PIER 3 (A S1 S9)

SCALE : 1/8" = 1'-0"

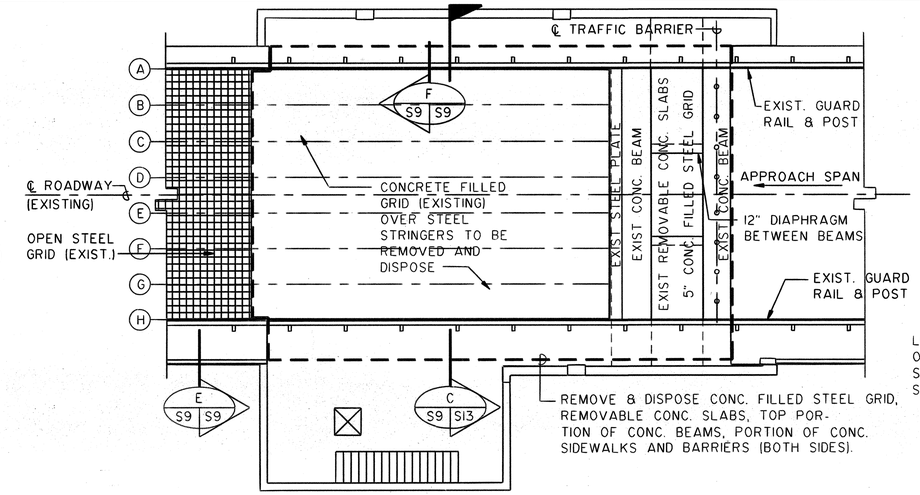

DEMOLITION PLAN OF EXIST ROADWAY AT PIER 4 (B S1 S9)

SCALE : 1/8" = 1'-0"

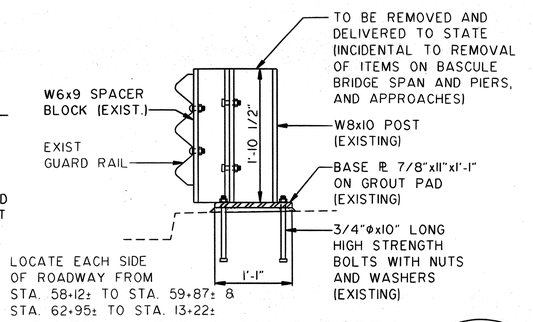

EXIST. THRIE BEAM GUARDRAIL DETAIL (F S9 S9 / S11)

SCALE : 1" = 1'-0"

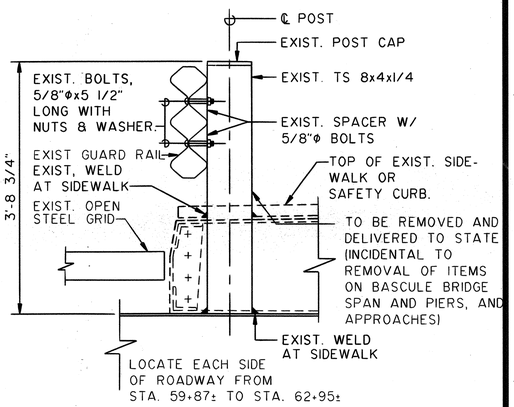

EXIST. TUBULAR THRIE BEAM GUARDRAIL SECTION (E S14 S9 / S9)

SCALE : 1" = 1'-0"

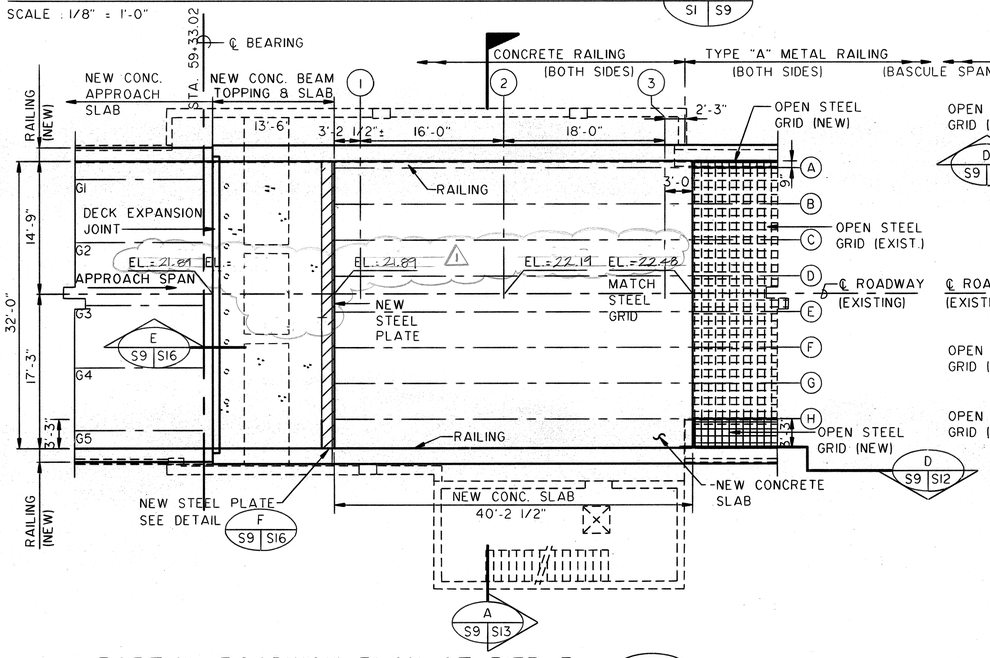

PARTIAL ROADWAY PLAN AT PIER 3 (C S9 S9)

SCALE : 1/8" = 1'-0"

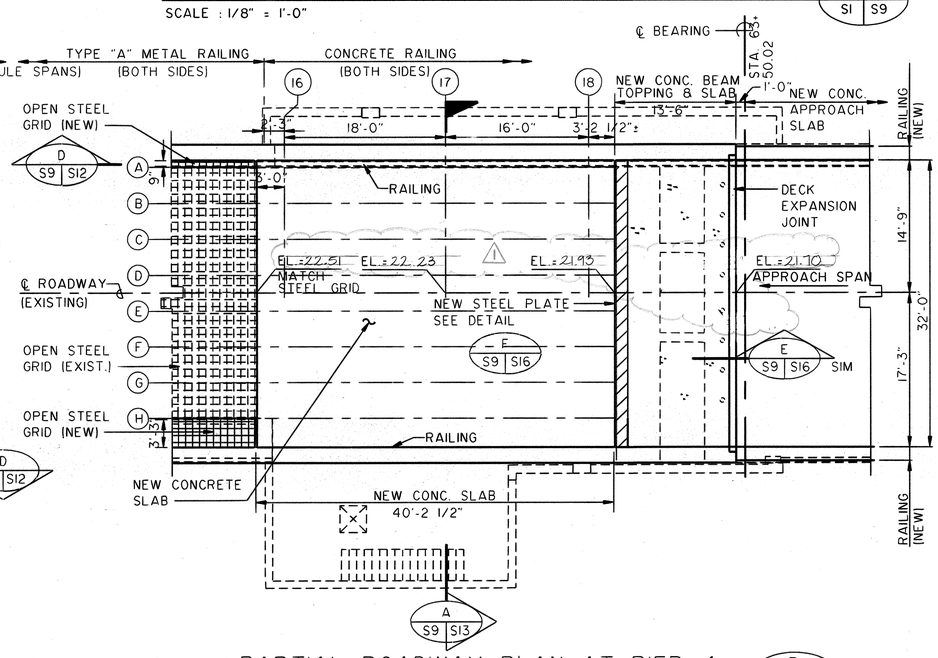

PARTIAL ROADWAY PLAN AT PIER 4 (D S9 S9)

SCALE : 1/8" = 1'-0"

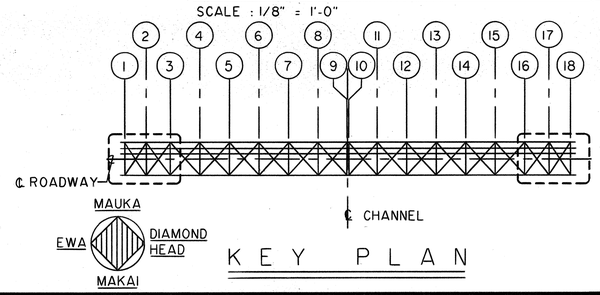

KEY PLAN

DATE	REVISION
4/13/92 (1)	REVISED GRADES

ROSCOE O. FORD REGISTERED PROFESSIONAL ENGINEER No. 3731-S HAWAII, U.S.A.

THIS WORK WAS PREPARED BY ME OR UNDER MY SUPERVISION

Roscoe O. Ford

STATE OF HAWAII
DEPARTMENT OF TRANSPORTATION
HIGHWAYS DIVISION

PARTIAL ROADWAY PLANS AT PIER 3 AND PIER 4

SAND ISLAND BASCULE BRIDGE REHABILITATION PHASE II
PROJECT NO. BR-064-1(3)

SCALE: AS NOTED DATE: AUG. 15, 1991

SHEET No. S9 OF S21 SHEETS

ORIGINAL PLAN | NOTEBOOK No. | SURVEY PLOTTED BY | DRAWN BY | TRACED BY | DESIGNED BY | QUANTITIES BY | CHECKED BY | DATE

C.016

FED. ROAD DIST. NO.	STATE	FED. AID PROJ. NO.	FISCAL YEAR	SHEET NO.	TOTAL SHEETS
HAWAII	HAW.	BR-064-1(3)	1991	17	38

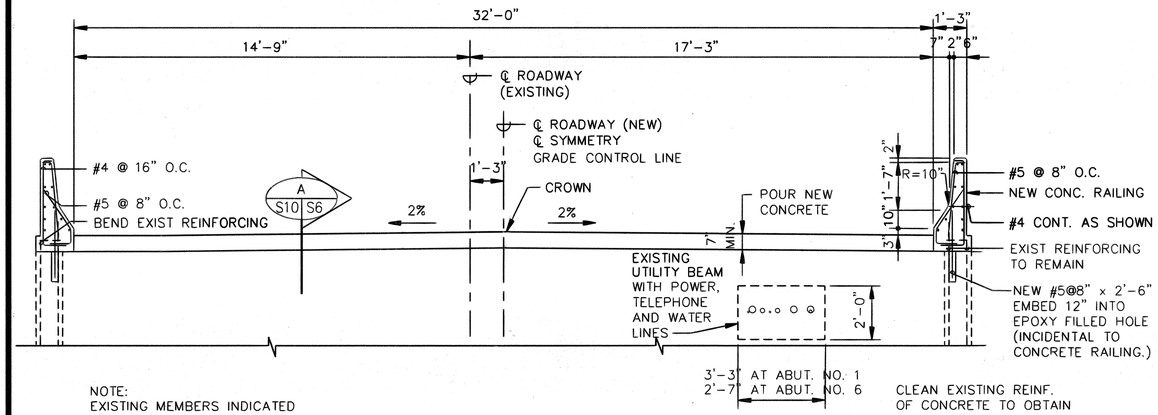

NOTE:
EXISTING MEMBERS INDICATED WITH DASHED LINES

CLEAN EXISTING REINF. OF CONCRETE TO OBTAIN ADEQUATE BOND WITH NEW CONCRETE (INCIDENTAL TO CONCRETE RAILING.)

NEW SECTION AT ABUTMENT (B / S10 S10)

SCALE : 3/8" = 1'-0"

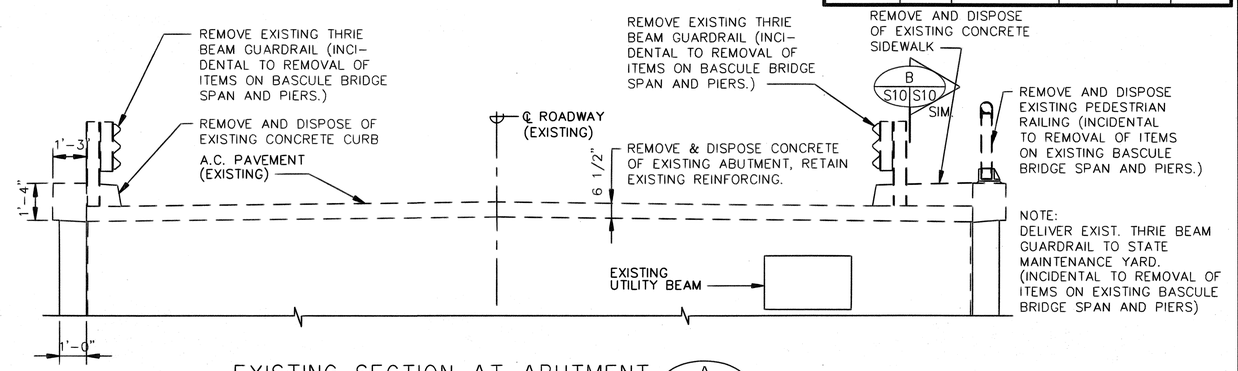

NOTE:
DELIVER EXIST. THRIE BEAM GUARDRAIL TO STATE MAINTENANCE YARD. (INCIDENTAL TO REMOVAL OF ITEMS ON EXISTING BASCULE BRIDGE SPAN AND PIERS)

EXISTING SECTION AT ABUTMENT (A / S1 S10)

SCALE : 3/8" = 1'-0"

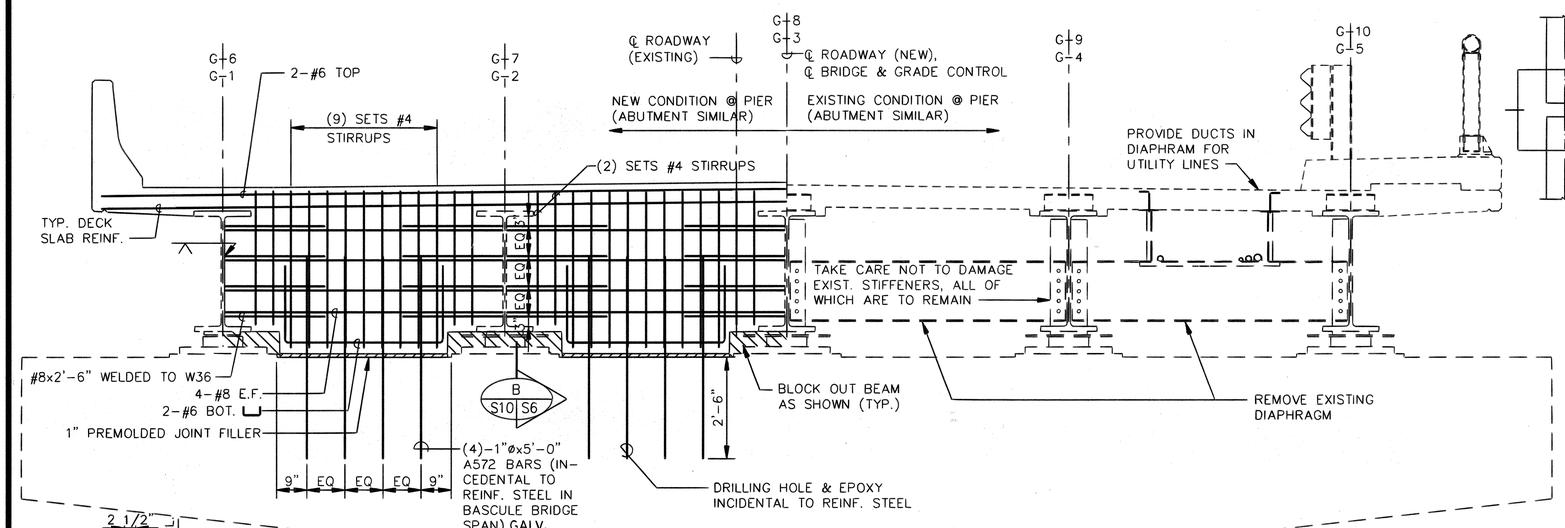

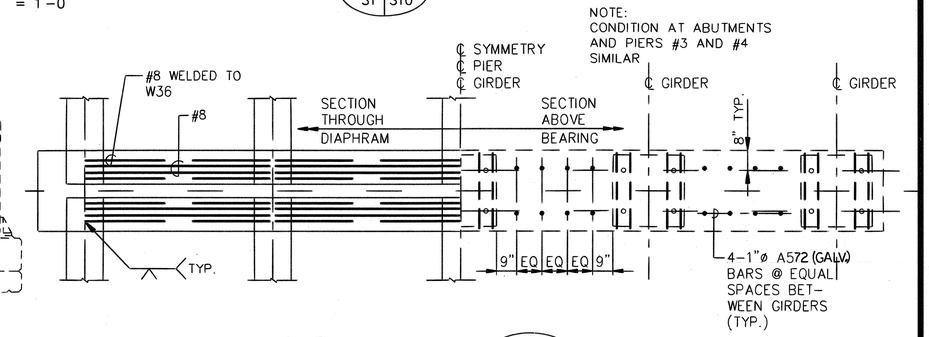

NOTE:
CONDITION AT ABUTMENTS AND PIERS #3 AND #4 SIMILAR

SECTION (E / S6 S10)

SCALE : 3/8" = 1'-0"

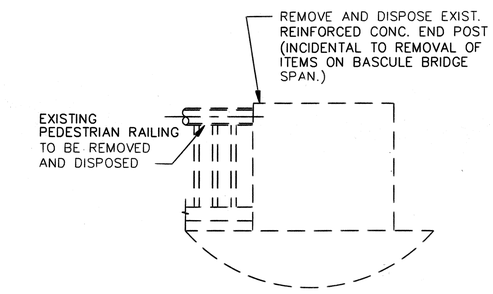

END-POST ELEVATION (C / S10 S10)

SCALE : 1/2" = 1'-0"

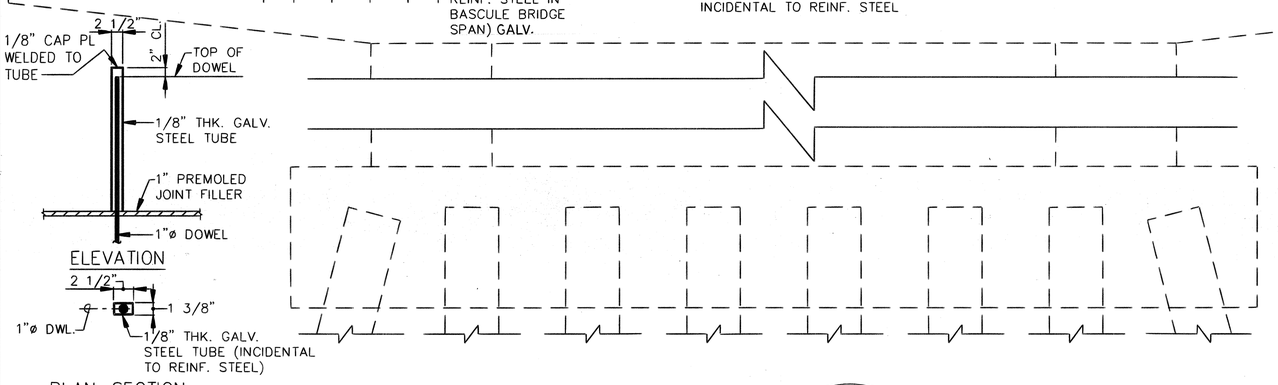

PLAN-SECTION EXP. BEARING DET. (F / S10 S10)

NOT TO SCALE

SECTION (D / S10 S10, S1 S6)

SCALE : 1/2" = 1'-0"

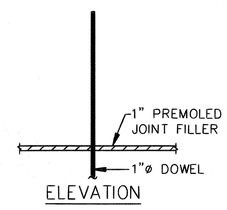

FIXED BEARING DETAIL (G / S10 S10)

NOT TO SCALE

DATE	REVISION

ROSCOE O. FORD
REGISTERED PROFESSIONAL ENGINEER
No. 3731-S
HAWAII, U.S.A.

THIS WORK WAS PREPARED BY ME OR UNDER MY SUPERVISION

Roscoe O. Ford

STATE OF HAWAII
DEPARTMENT OF TRANSPORTATION
HIGHWAYS DIVISION

CROSS SECTION AT ABUTMENT

SAND ISLAND BASCULE BRIDGE
REHABILITATION PHASE II
PROJECT NO. BR-064-1(3)

SCALE: AS NOTED DATE: AUG. 15, 1991

SHEET No. S10 OF S21 SHEETS

ORIGINAL PLAN	SURVEY PLOTTED BY	DATE
	DRAWN BY	
	TRACED BY	
NOTEBOOK	DESIGNED BY	
No.	QUANTITIES BY	
	CHECKED BY	

FED. ROAD DIST. NO.	STATE	FED. AID PROJ. NO.	FISCAL YEAR	SHEET NO.	TOTAL SHEETS
HAWAII	HAW.	BR-064-1(3)	1991	18	38

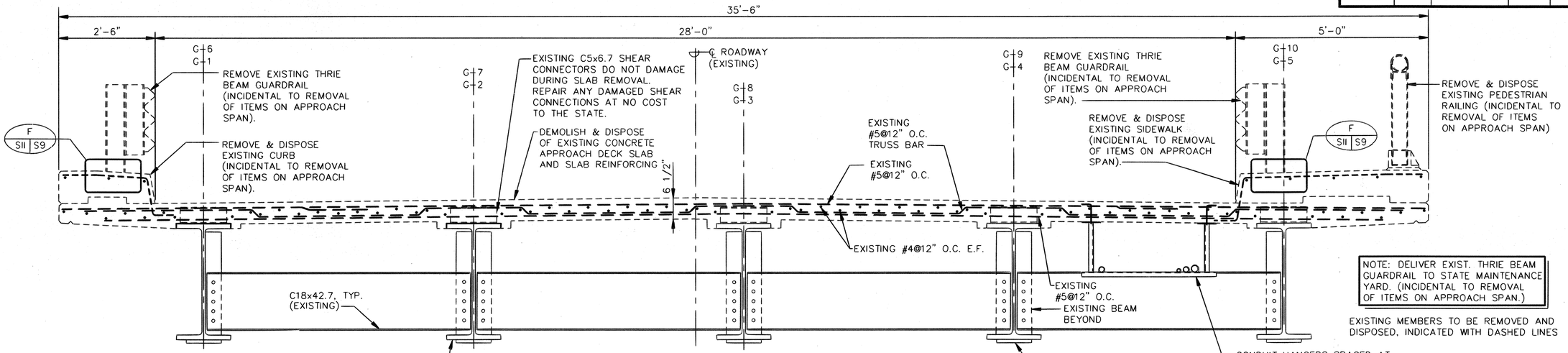

NOTE: DELIVER EXIST. THRIE BEAM GUARDRAIL TO STATE MAINTENANCE YARD. (INCIDENTAL TO REMOVAL OF ITEMS ON APPROACH SPAN.)

EXISTING MEMBERS TO BE REMOVED AND DISPOSED, INDICATED WITH DASHED LINES

EXISTING APPROACH DECK SECTION A

SCALE : 3/4" = 1'-0"

S1 | S11

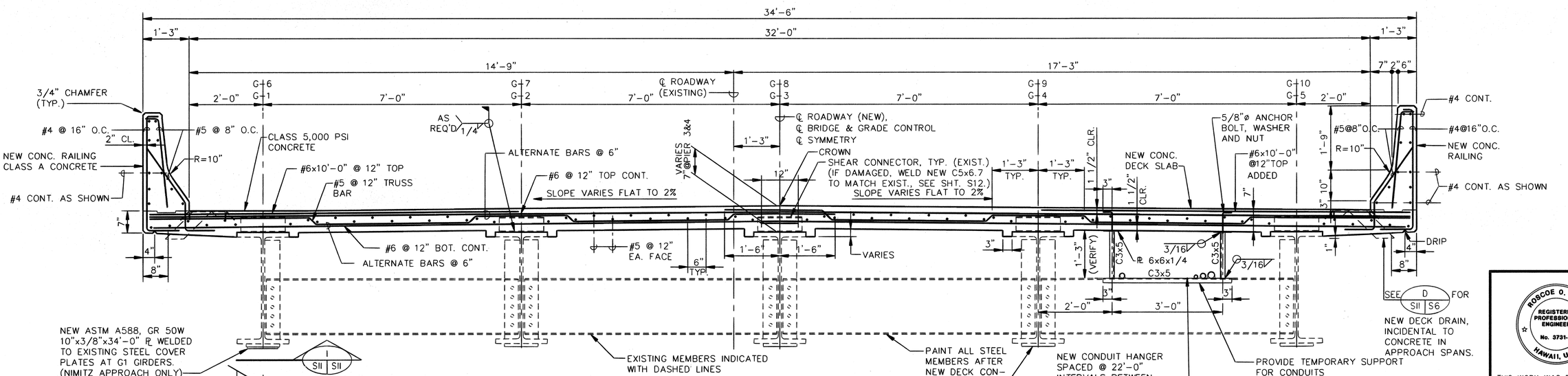

NEW CONCRETE APPROACH DECK SLAB SECTION B

SCALE : 3/4" = 1'-0"

S6, S16 | S11 S11

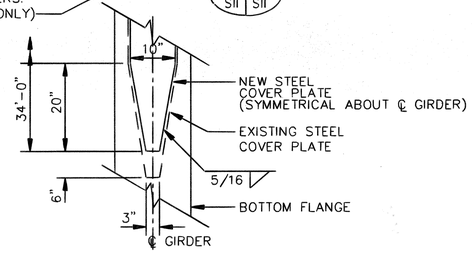

BOTTOM VIEW

SCALE : 3/4" = 1'-0"

I S11 S11

ROSCOE O. FORD REGISTERED PROFESSIONAL ENGINEER No. 3731-S HAWAII, U.S.A.

THIS WORK WAS PREPARED BY ME OR UNDER MY SUPERVISION

Roscoe O. Ford

STATE OF HAWAII
DEPARTMENT OF TRANSPORTATION
HIGHWAYS DIVISION

CROSS SECTION AT APPROACH SPANS

SAND ISLAND BASCULE BRIDGE
REHABILITATION PHASE II
PROJECT NO. BR-064-1(3)

SCALE: AS NOTED DATE: AUG. 15, 1991

SHEET No. S11 OF S21 SHEETS

DATE	REVISION

ORIGINAL PLAN | SURVEY PLOTTED BY | DRAWN BY | TRACED BY | DESIGNED BY | NOTEBOOK | QUANTITIES BY | CHECKED BY | DATE | No.

FED. ROAD DIST. NO.	STATE	FED. AID PROJ. NO.	FISCAL YEAR	SHEET NO.	TOTAL SHEETS
HAWAII	HAW.	BR-064-1(3)	1991	19	38

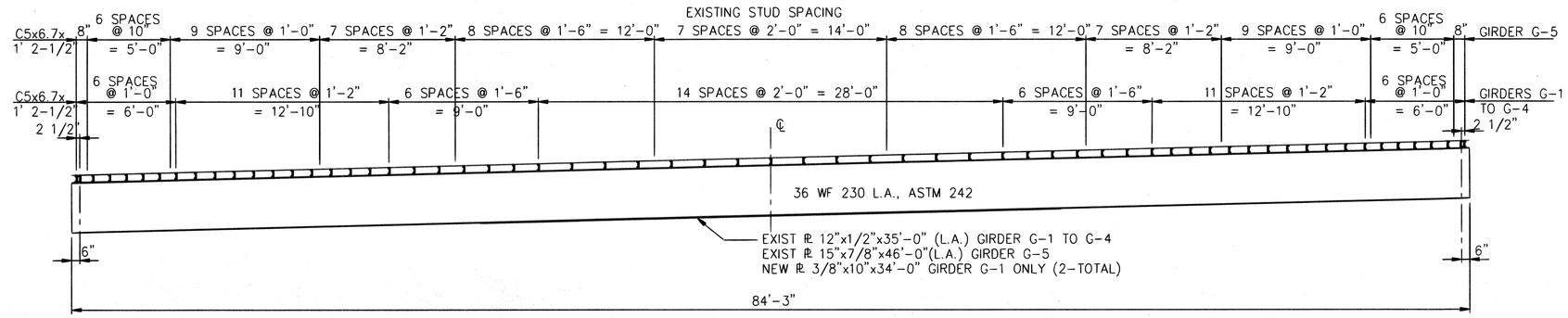

EXIST. GIRDER G-1 TO G-5 (A) S12 | S12

SCALE : 1/4" = 1'-0"

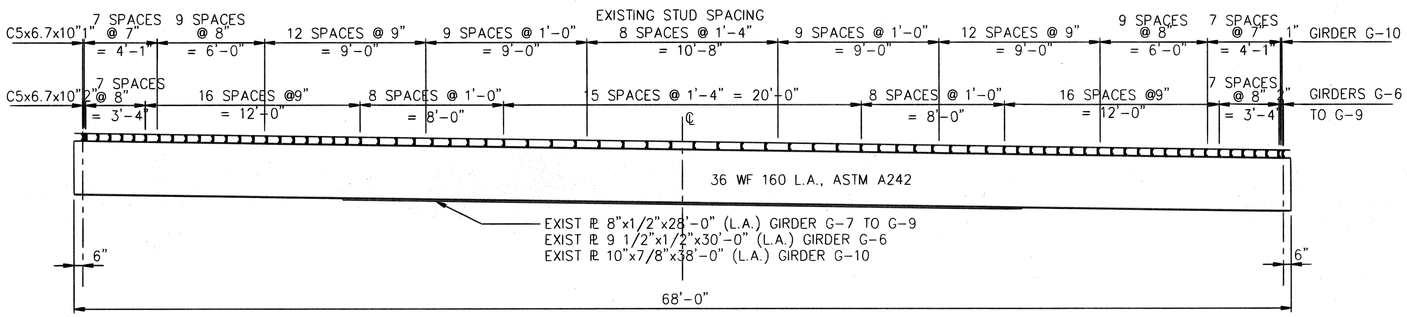

EXIST. GIRDER G-6 TO G-10 (B) S12 | S12 S2

SCALE : 1/4" = 1'-0"

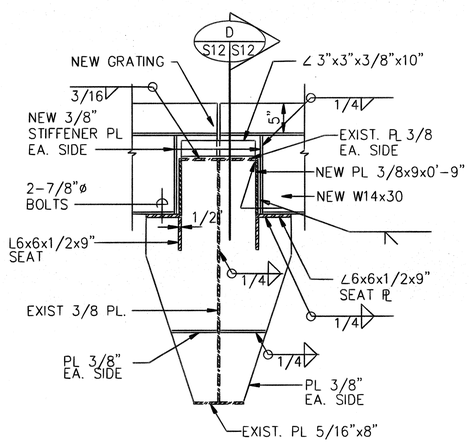

SECTION (C) S14 | S12 S15

SCALE : 1" = 1'-0"

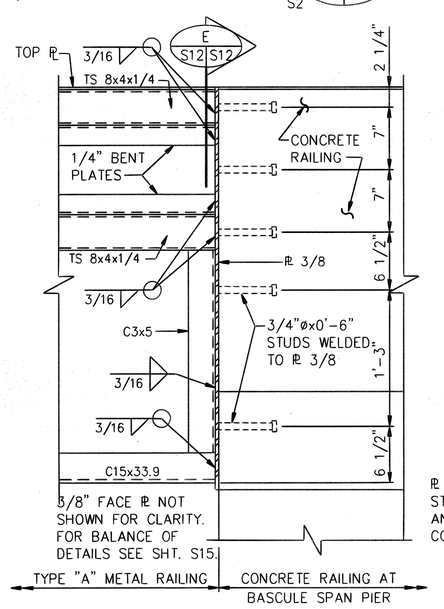

SECTION (D) S9 | S12

SCALE : 1 1/2"=1'-0"

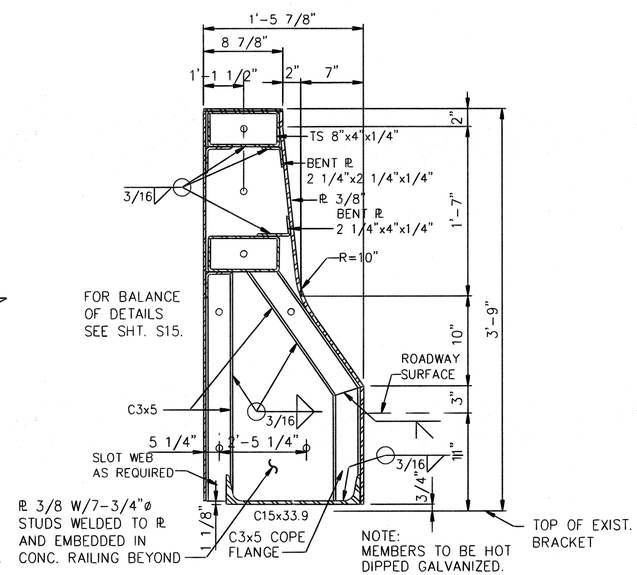

SECTION (E) S12 | S12

SCALE : 1 1/2"=1'-0"

DATE	REVISION

ROSCOE O. FORD
REGISTERED PROFESSIONAL ENGINEER
No. 3731-S
HAWAII, U.S.A.

THIS WORK WAS PREPARED BY ME OR UNDER MY SUPERVISION

Roscoe O. Ford

STATE OF HAWAII
DEPARTMENT OF TRANSPORTATION
HIGHWAYS DIVISION

APPROACH SPAN GIRDER ELEVATIONS AND SECTIONS

SAND ISLAND BASCULE BRIDGE
REHABILITATION PHASE II
PROJECT NO. BR-064-1(3)

SCALE: AS NOTED DATE: AUG. 15, 1991

SHEET No. S12 OF S21 SHEETS

ORIGINAL PLAN | SURVEY PLOTTED BY | DRAWN BY | TRACED BY | DESIGNED BY | QUANTITIES BY | CHECKED BY | DATE
NOTEBOOK No.

FED. ROAD DIST. NO.	STATE	FED. AID PROJ. NO.	FISCAL YEAR	SHEET NO.	TOTAL SHEETS
HAWAII	HAW.	BR-064-1(3)	1991	20	38

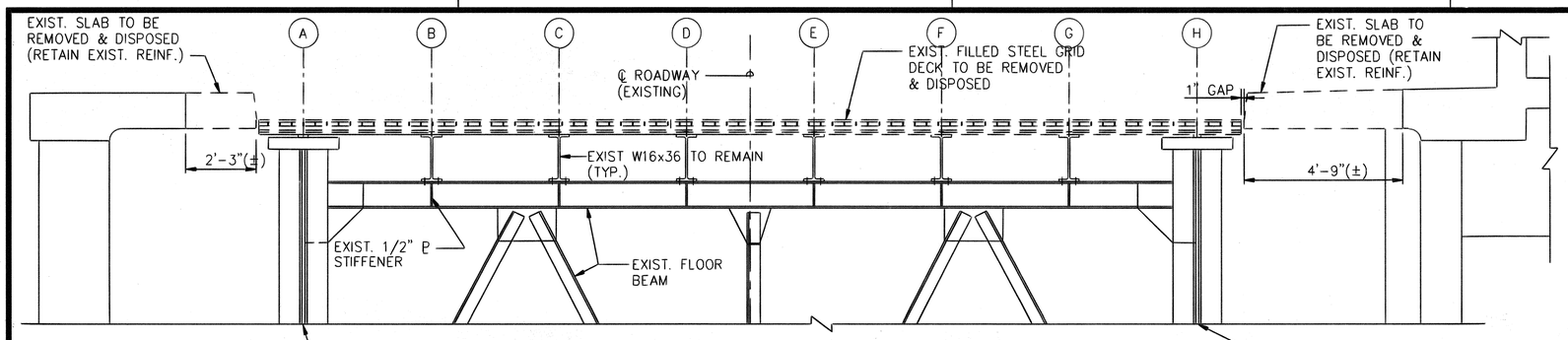

EXISTING CONCRETE FILLED GRID DECK (C / S9 | S13)
SCALE : 1/2" = 1'-0"
S2, S3

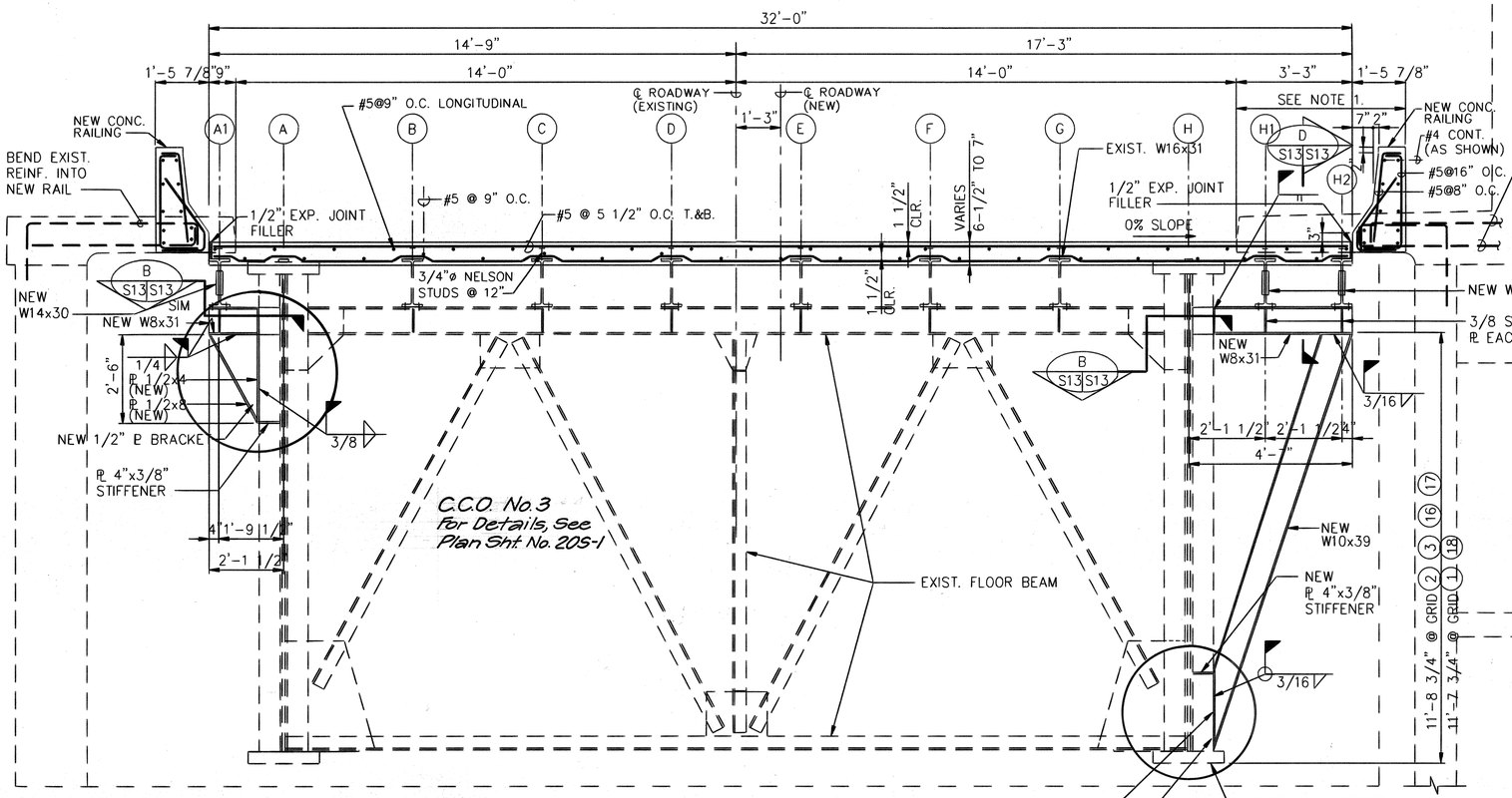

NOTE:
EXISTING MEMBERS INDICATED WITH DASHED LINES.

SECTION (A / S9 | S13)
SCALE : 1/2" = 1'-0"
S7

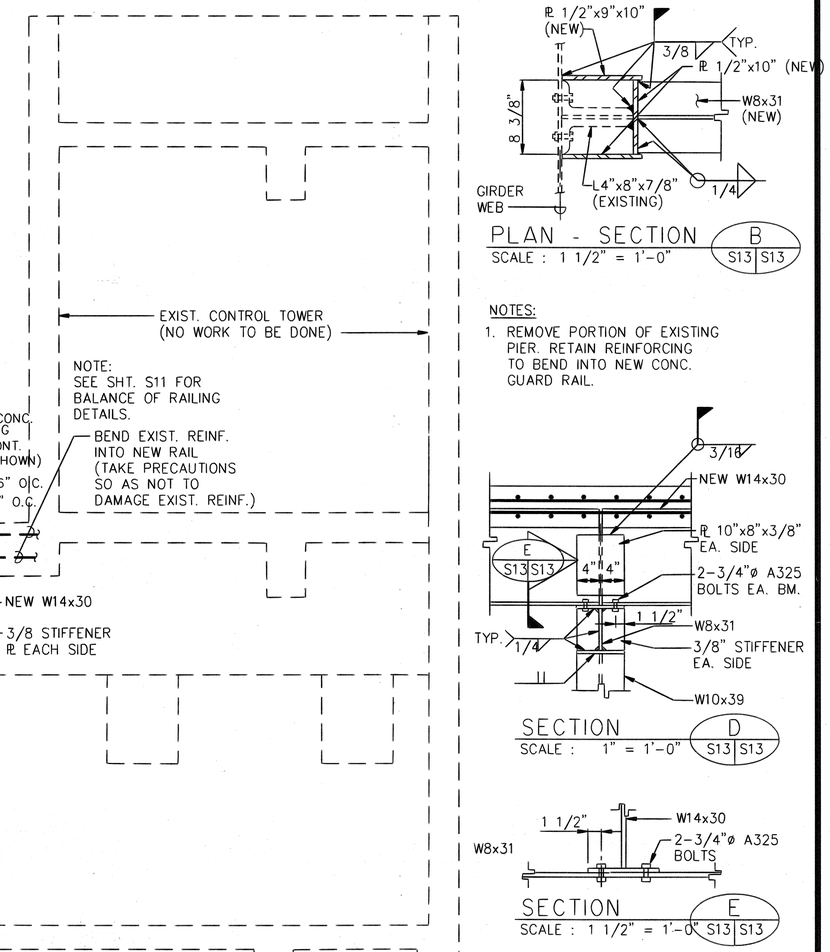

PLAN - SECTION (B / S13 | S13)
SCALE : 1 1/2" = 1'-0"

NOTES:
1. REMOVE PORTION OF EXISTING PIER. RETAIN REINFORCING TO BEND INTO NEW CONC. GUARD RAIL.

SECTION (D / S13 | S13)
SCALE : 1" = 1'-0"

SECTION (E / S13 | S13)
SCALE : 1 1/2" = 1'-0"

ROSCOE O. FORD
REGISTERED PROFESSIONAL ENGINEER
No. 3731-S
HAWAII, U.S.A.

THIS WORK WAS PREPARED BY ME OR UNDER MY SUPERVISION
Roscoe O. Ford

STATE OF HAWAII
DEPARTMENT OF TRANSPORTATION
HIGHWAYS DIVISION

SECTIONS

SAND ISLAND BASCULE BRIDGE
REHABILITATION PHASE II
PROJECT NO. BR-064-1(3)

SCALE: AS NOTED DATE: AUG. 15, 1991

SHEET No. S13 OF S21 SHEETS

DATE	REVISION

ORIGINAL PLAN
NOTEBOOK No.
SURVEY PLOTTED BY
DRAWN BY
TRACED BY
TYPEWRITTEN BY
QUANTITIES BY
CHECKED BY
DATE

FED. ROAD DIST. NO.	STATE	FED. AID PROJ. NO.	FISCAL YEAR	SHEET NO.	TOTAL SHEETS
HAWAII	HAW.	BR-064-1(3)	1991	205-1	38

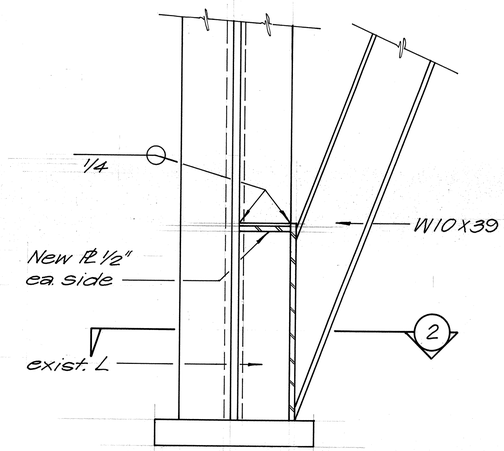

1 DETAIL
Not to Scale

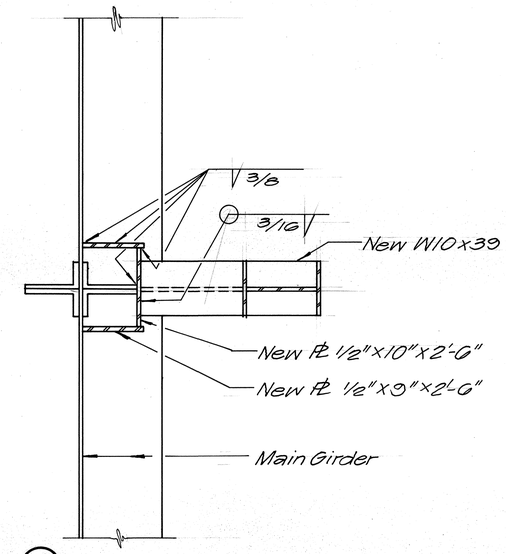

2 DETAIL
Not to Scale

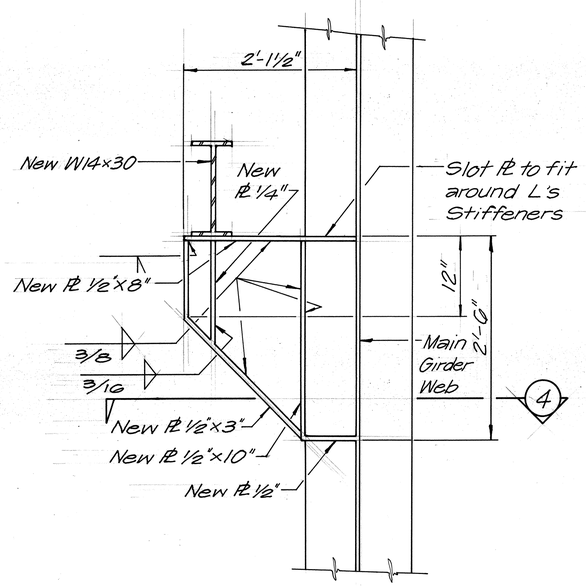

3 DETAIL
Not to Scale

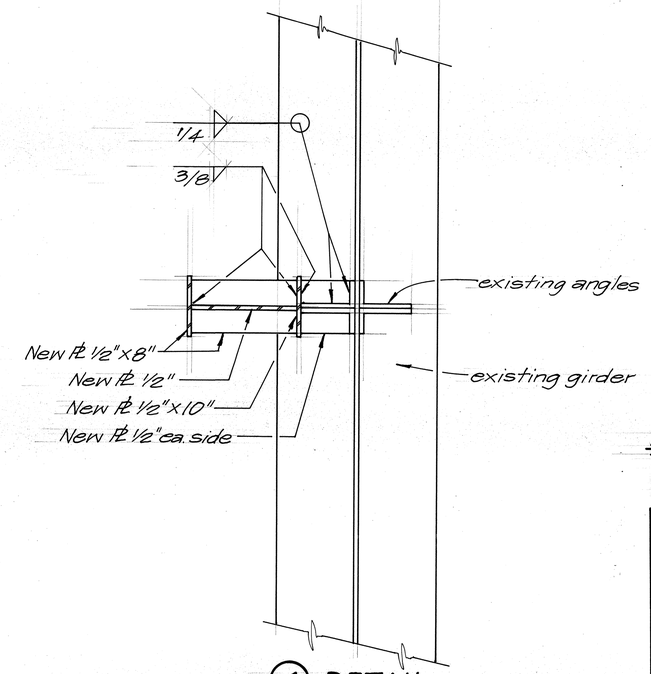

4 DETAIL
Not to Scale

NOTE:
This tracing prepared during "As-Built" posting.

STATE OF HAWAII
DEPARTMENT OF TRANSPORTATION
HIGHWAYS DIVISION

DETAILS

SAND ISLAND BASCULE BRIDGE
REHABILITATION PHASE II
PROJECT NO. BR-064-1(3)

Scale: As Noted Date: Feb, 1990

SHEET No. 1 OF 1 SHEETS

20S-1

		DATE
SURVEY PLOTTED BY		
DRAWN BY		
TRACED BY		
DESIGNED BY		
QUANTITIES BY		
CHECKED BY		

ORIGINAL PLAN
NOTE BOOK
No.

137218

FED. ROAD DIST. NO.	STATE	FED. AID PROJ. NO.	FISCAL YEAR	SHEET NO.	TOTAL SHEETS
HAWAII	HAW.	BR-064-1(3)	1991	21	38

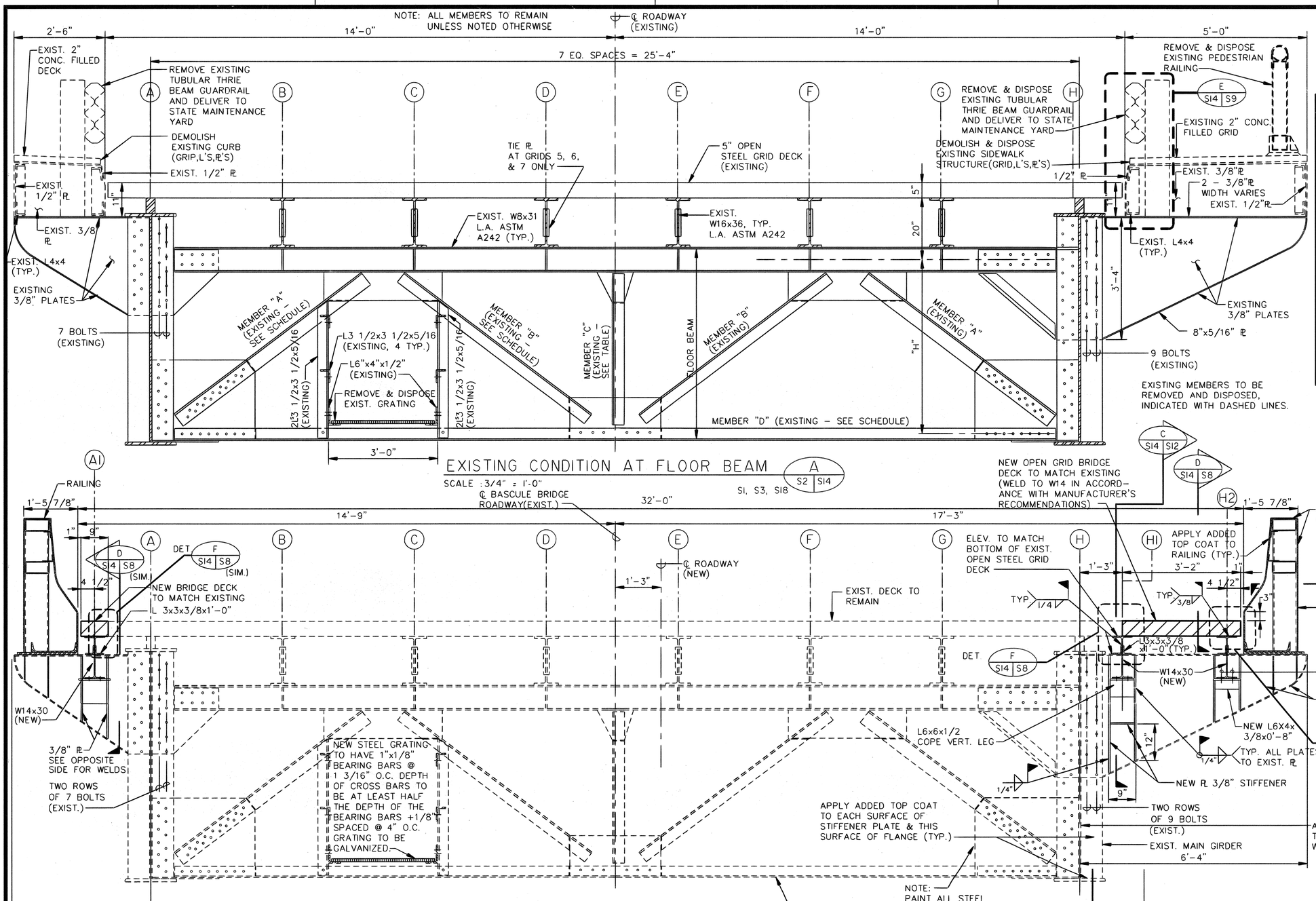

EXISTING CONDITION AT FLOOR BEAM (A: S2 | S14)

SCALE : 3/4" = 1'-0"

S1, S3, S18

FLOOR BEAM SCHEDULE (EXISTING)

GRID NO.	MEMBER "A"	MEMBER "B"	MEMBER "C"	MEMBER "D"	DEPTH "H"
1, 18	2-L5x5x7/16"	2-L5x5x3/8"	2-L4x4x5/16"	2-L4x4x7/16"	11'-10 9/16"
2, 17	DO.	DO.	DO.	DO.	11'-11 9/16"
3, 16	DO.	DO.	DO.	DO.	11'-11 9/16"
4, 15	DO.	2L5 4x4x5/16"	DO.	2L5 4x4x3/8"	9'-10 1/8"
5, 15	DO.	DO.	DO.	DO.	8'-1 3/8"
6, 14	DO.	DO.	DO.	DO.	6'-8 5/8"
7, 12	DO.	DO.	DO.	DO.	5'-7 13/16"
8, 11	DO.	DO.	DO.	DO.	4'-10 13/16"
9, 10	SEE SHEET S14				4'-5 5/8"

EXISTING MEMBERS CONFORM TO ASTM A7, UNLESS NOTED OTHERWISE.

FINISHED CONDITION AT FLOOR BEAM (B: S14 | S14)

SCALE : 3/4" = 1'-0"

S7

DATE	REVISION

ROSCOE O. FORD REGISTERED PROFESSIONAL ENGINEER No. 3731-S HAWAII, U.S.A.

THIS WORK WAS PREPARED BY ME OR UNDER MY SUPERVISION

Roscoe O. Ford

STATE OF HAWAII
DEPARTMENT OF TRANSPORTATION
HIGHWAYS DIVISION

CROSS SECTIONS AT BASCULE BRIDGE FLOOR BEAMS

SAND ISLAND BASCULE BRIDGE REHABILITATION PHASE II

PROJECT NO. BR-064-1(3)

SCALE: AS NOTED DATE: AUG. 15, 1991

SHEET No. S14 OF S21 SHEETS

ORIGINAL PLAN | NOTEBOOK No. | SURVEY PLOTTED BY | DRAWN BY | TRACED BY | DESIGNED BY | QUANTITIES BY | CHECKED BY | DATE

FED. ROAD DIST. NO.	STATE	FED. AID PROJ. NO.	FISCAL YEAR	SHEET NO.	TOTAL SHEETS
HAWAII	HAW.	BR-064-1(3)	1991	22	38

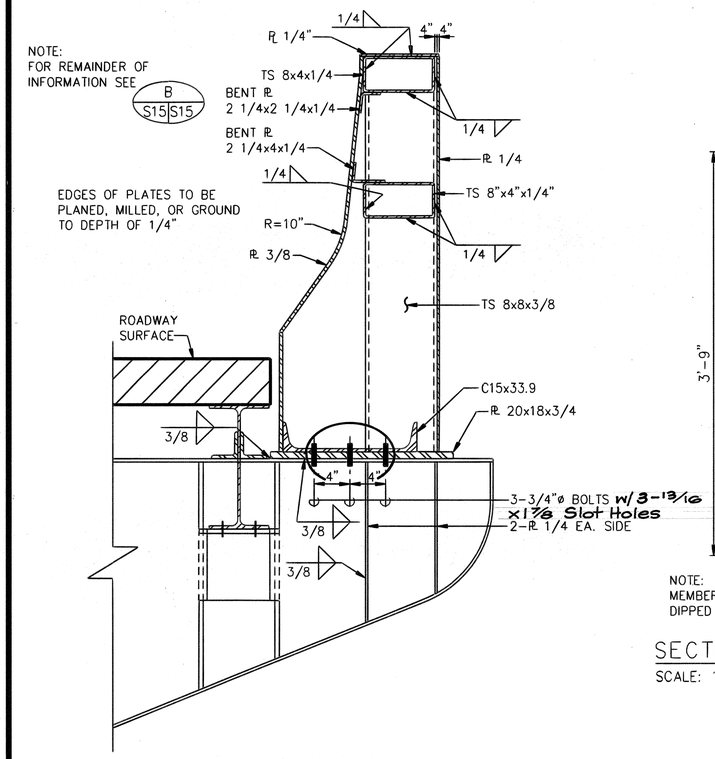

SECTION AT POST-TYPE "A" METAL RAILING C S15 S15 / S7

SCALE: 1 1/2" = 1'-0"

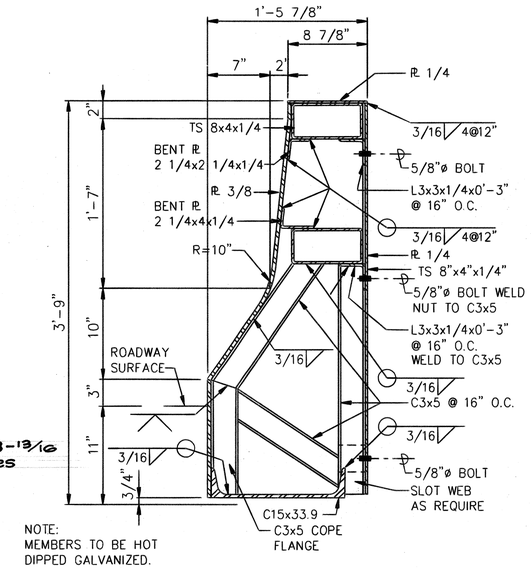

SECTION-TYPE "A" METAL RAILING B S15 S15 / S7

SCALE: 1 1/2" = 1'-0"

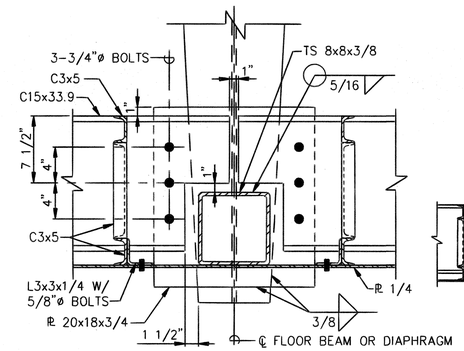

RAILING DETAIL D S15 S15

SCALE : 1 1/2" = 1'-0"

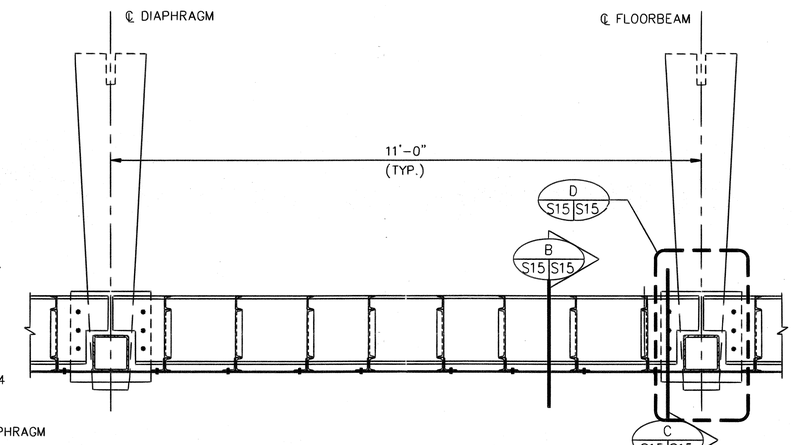

PLAN-TYPE "A" METAL RAILING A S7 S15

SCALE: 3/4" = 1'-0"

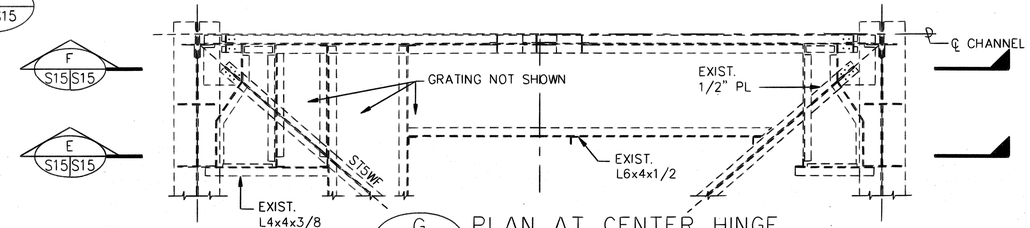

G S15 S15 PLAN AT CENTER HINGE

SCALE : 3/8" = 1'-0"

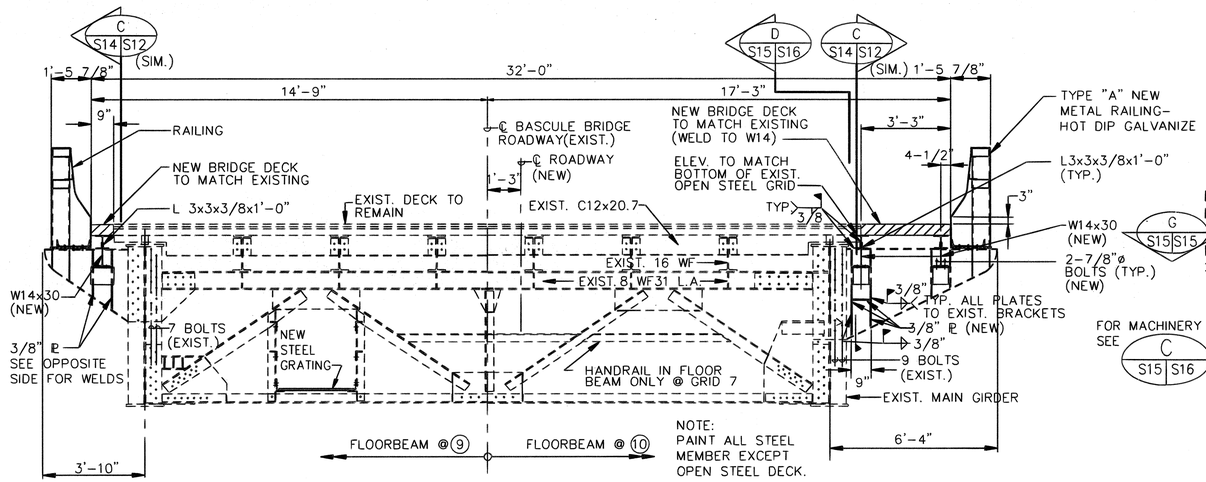

FINISHED CONDITION AT FLOOR BEAM F S15 S15 / S2

SCALE : 3/8" = 1'-0"

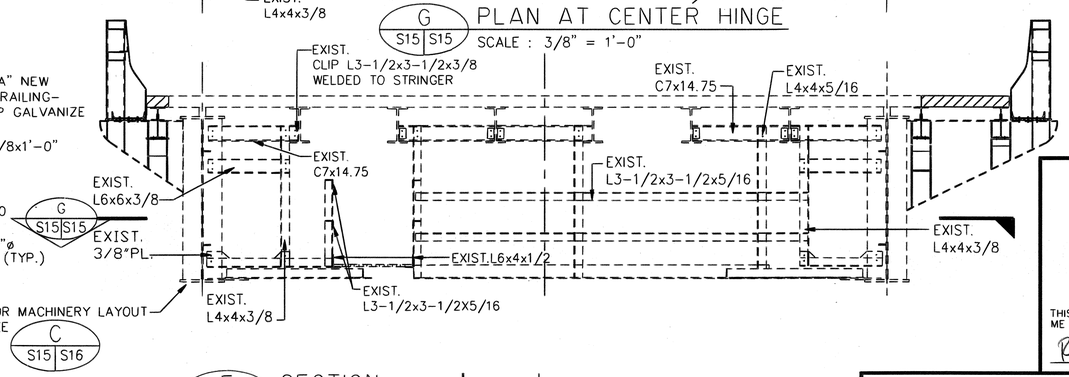

E S15 S15 SECTION

SCALE : 3/8" = 1'-0"

ROSCOE O. FORD
REGISTERED PROFESSIONAL ENGINEER
No. 3731-S
HAWAII, U.S.A.

THIS WORK WAS PREPARED BY ME OR UNDER MY SUPERVISION

Roscoe O. Ford

STATE OF HAWAII
DEPARTMENT OF TRANSPORTATION
HIGHWAYS DIVISION

NEW METAL RAILING AND CONNECTION DETAILS

SAND ISLAND BASCULE BRIDGE
REHABILITATION PHASE II
PROJECT NO. BR-064-1(3)

SCALE: AS NOTED DATE: AUG.15, 1991

SHEET No. S15 OF S21 SHEETS

DATE	REVISION

ORIGINAL PLAN | NOTEBOOK | No. | SURVEY PLOTTED BY | DRAWN BY | TRACED BY | DESIGNED BY | QUANTITIES BY | CHECKED BY | DATE

FED. ROAD DIST. NO.	STATE	FED. AID PROJ. NO.	FISCAL YEAR	SHEET NO.	TOTAL SHEETS
HAWAII	HAW.	BR-064-1(3)	1991	23	38

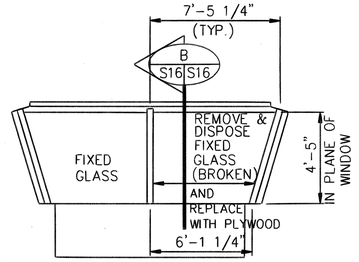

ELEVATION 1

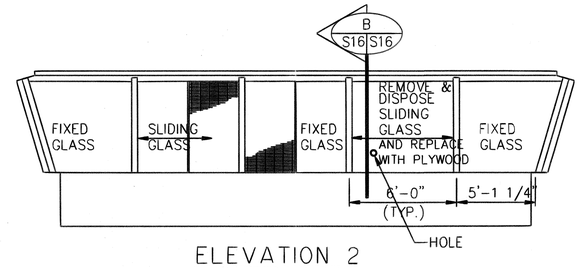

ELEVATION 2

EXIST. CONTROL ROOM ELEVATIONS (A / S16 S16)

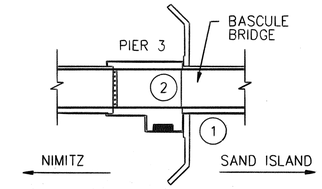

KEY PLAN FOR CONTROL ROOM ELEVATIONS

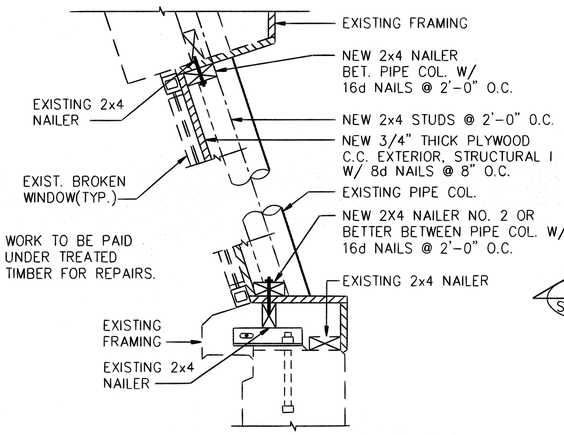

TYP. WINDOW REPAIR SECTION (B / S16 S16)
SCALE : 1 1/2" = 1'-0"

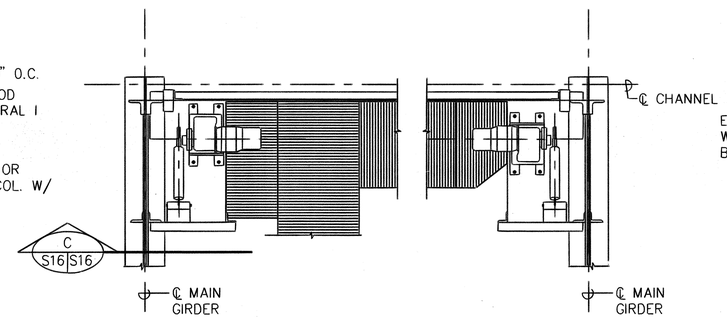

PLAN AT CENTER LOCK
EXIST. CONFIGURATION
SCALE: 3/8"=1'-0"

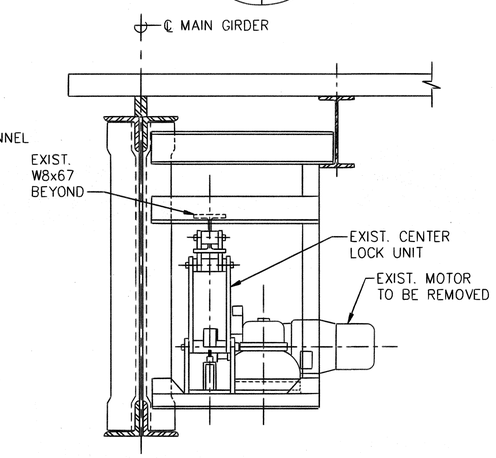

SECTION (C / S16 S16)
SCALE : 3/4"=1'-0"
S15

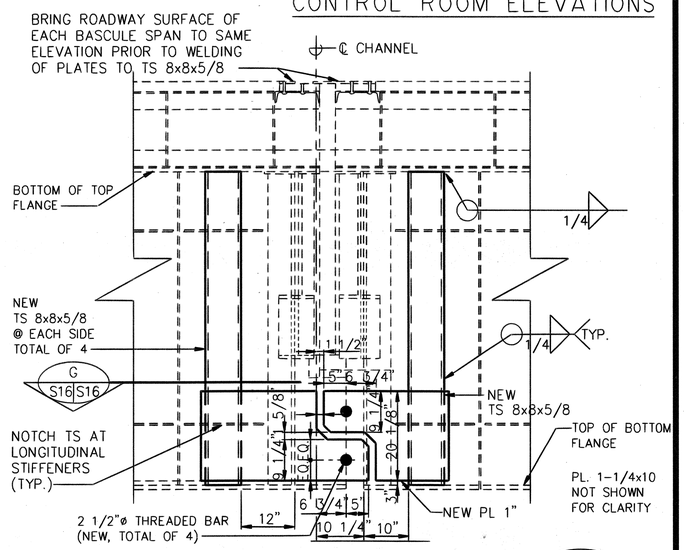

SECTION AT LOCK FOR CENTER HINGE (D / S15 S16)
SCALE : 3/4"=1'-0"
S1

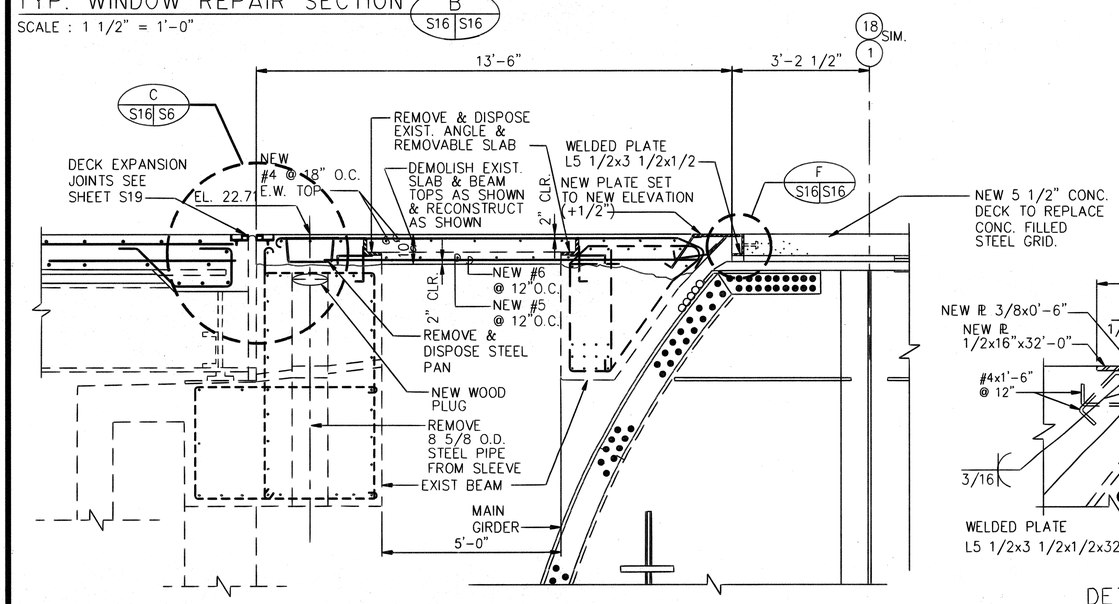

SECTION (E / S9 S16)
SCALE : 1/2" = 1'-0"

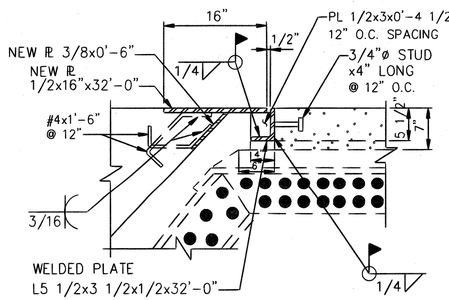

DETAIL (F / S16 S16)
SCALE : 1" = 1'-0"
S9

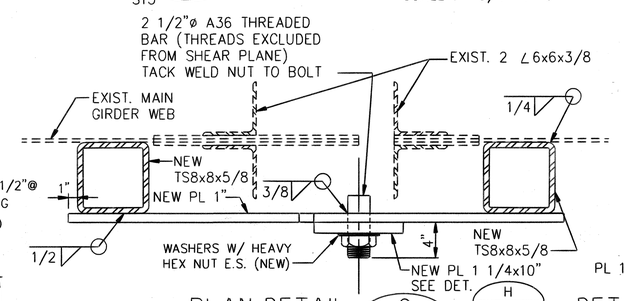

PLAN-DETAIL (G / S16 S16)
SCALE : 1 1/2"=1'-0"

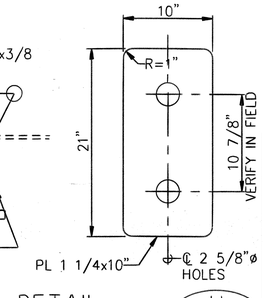

DETAIL (H / S16 S16)
SCALE : 1 1/2"=1'-0"

ROSCOE O. FORD
REGISTERED PROFESSIONAL ENGINEER
No. 3731-S
HAWAII, U.S.A.

THIS WORK WAS PREPARED BY ME OR UNDER MY SUPERVISION

Roscoe O. Ford

DATE	REVISION

STATE OF HAWAII
DEPARTMENT OF TRANSPORTATION
HIGHWAYS DIVISION

MISCELLANEOUS DETAILS

SAND ISLAND BASCULE BRIDGE
REHABILITATION PHASE II
PROJECT NO. BR-064-1(3)

SCALE: AS NOTED DATE: AUG. 15, 1991

SHEET No. S16 OF S21 SHEETS

ORIGINAL PLAN | NOTEBOOK | No. | SURVEY PLOTTED BY | DRAWN BY | TRACED BY | DESIGNED BY | QUANTITIES BY | CHECKED BY | DATE

FED. ROAD DIST. NO.	STATE	FED. AID PROJ. NO.	FISCAL YEAR	SHEET NO.	TOTAL SHEETS
HAWAII	HAW.	BR-064-1(3)	1991	24	38

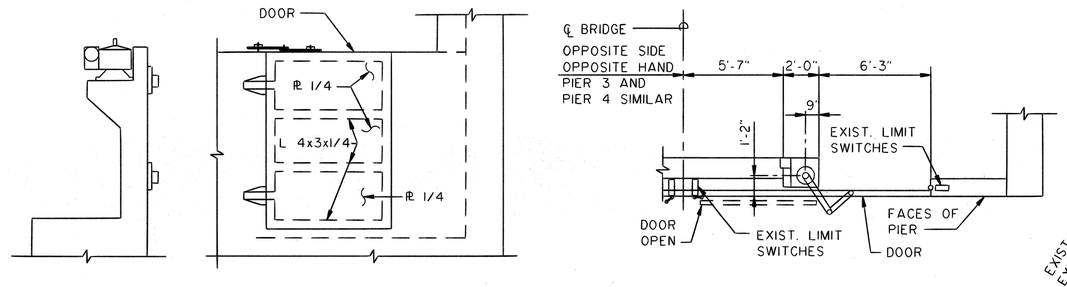

EXIST. TSUNAMI GATE DETAIL (E / S17 | S17)

SCALE : 1/4" = 1'-0"

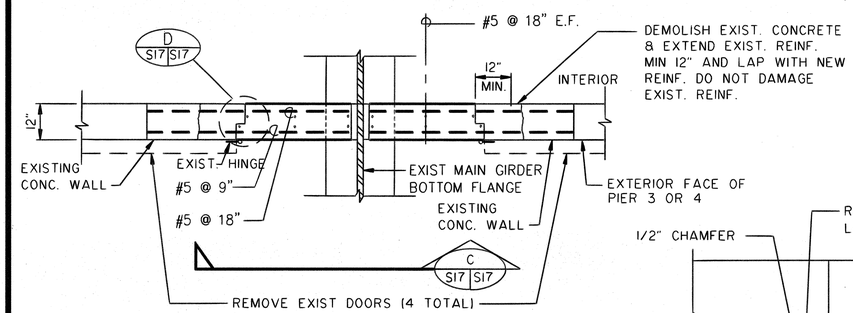

PLAN - GATE (B / S1 | S17)

SCALE : 1/2" - 1'-0"

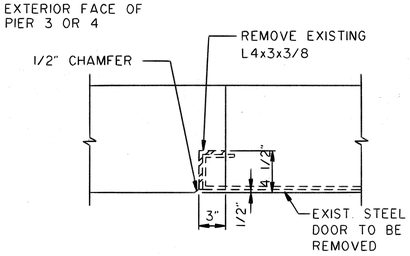

TSUNAMI GATE SECTION (D / S17 | S17)

SCALE : 1 1/2" = 1'-0"

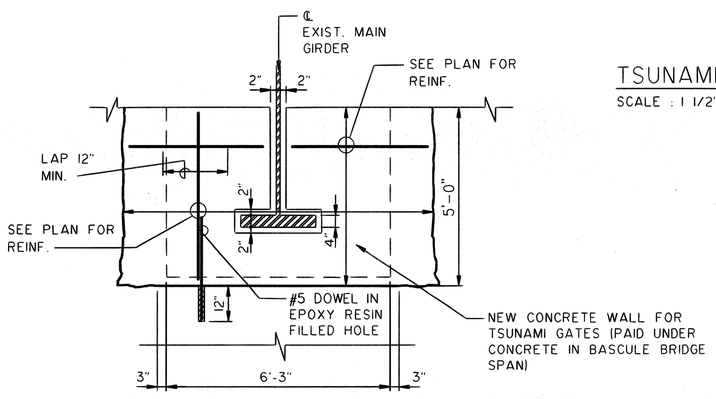

TSUNAMI GATE ELEVATION (C / S17 | S17)

SCALE : 1/2" - 1'-0"

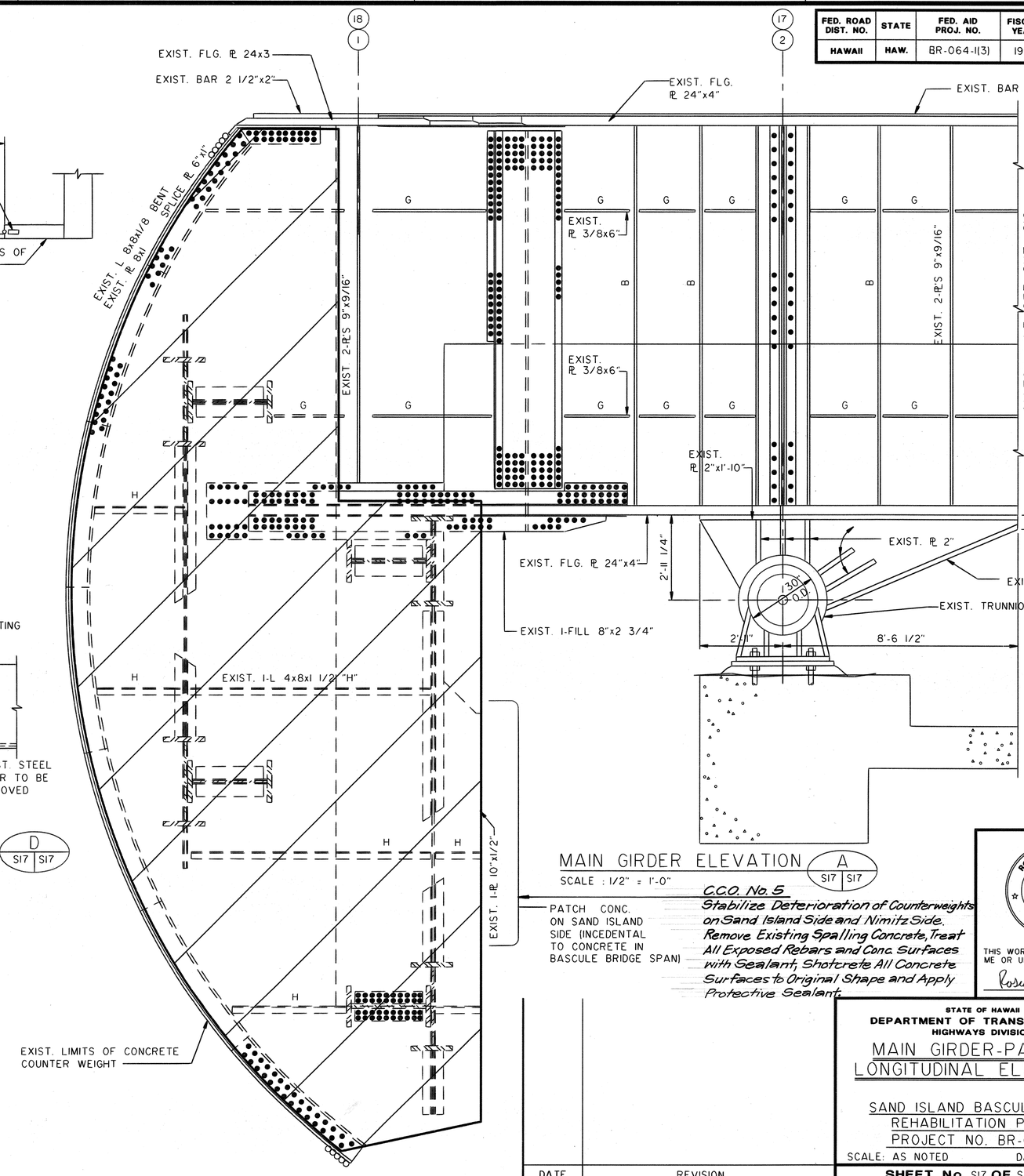

MAIN GIRDER ELEVATION (A / S17 | S17)

SCALE : 1/2" = 1'-0"

PATCH CONC. ON SAND ISLAND SIDE (INCEDENTAL TO CONCRETE IN BASCULE BRIDGE SPAN)

C.C.O. No. 5
Stabilize Deterioration of Counterweights on Sand Island Side and Nimitz Side. Remove Existing Spalling Concrete, Treat All Exposed Rebars and Conc. Surfaces with Sealant, Shotcrete All Concrete Surfaces to Original Shape and Apply Protective Sealant.

ROSCOE O. FORD
REGISTERED PROFESSIONAL ENGINEER
No. 3731-S
HAWAII, U.S.A.

THIS WORK WAS PREPARED BY ME OR UNDER MY SUPERVISION

Roscoe O. Ford

STATE OF HAWAII
DEPARTMENT OF TRANSPORTATION
HIGHWAYS DIVISION

MAIN GIRDER-PARTIAL LONGITUDINAL ELEVATION

SAND ISLAND BASCULE BRIDGE
REHABILITATION PHASE II
PROJECT NO. BR-064-1(3)

SCALE: AS NOTED DATE: AUG. 15, 1991

SHEET No. S17 OF S21 SHEETS

DATE	REVISION

ORIGINAL PLAN | SURVEY PLOTTED BY | DRAWN BY | TRACED BY | DESIGNED BY | QUANTITIES BY | CHECKED BY | DATE
NOTEBOOK No.

FED. ROAD DIST. NO.	STATE	FED. AID PROJ. NO.	FISCAL YEAR	SHEET NO.	TOTAL SHEETS
HAWAII	HAW.	BR-064-1(3)	1991	25	38

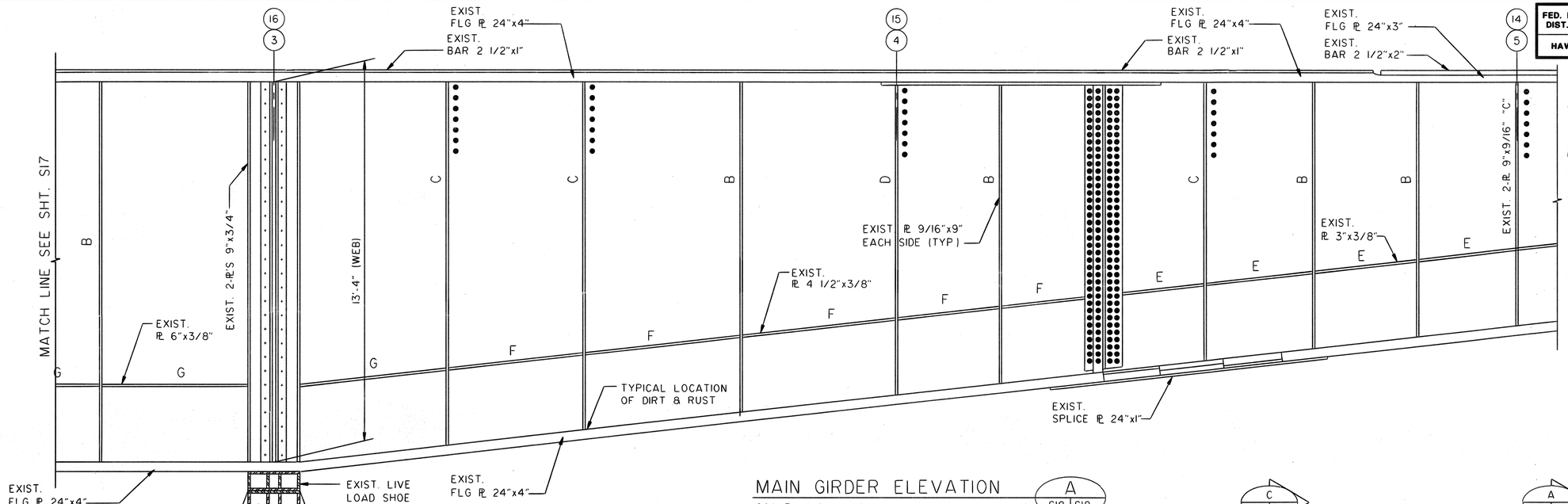

MAIN GIRDER ELEVATION (A S18 | S18)

SCALE : 1/2" = 1'-0"

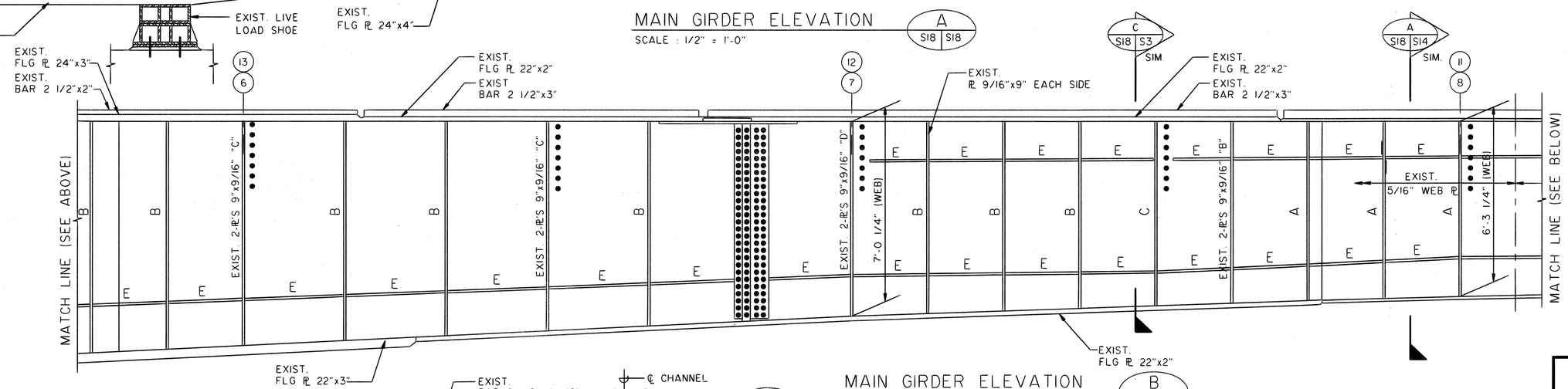

MAIN GIRDER ELEVATION (B S18 | S18)

SCALE : 1/2" = 1'-0"

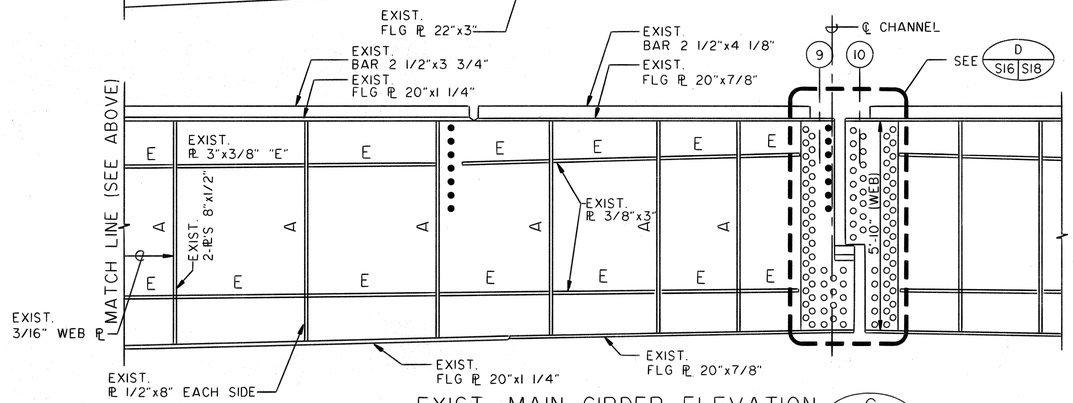

EXIST. MAIN GIRDER ELEVATION (C S18 | S18)

SCALE : 1/2" = 1'-0"

NOTE:
EXISTING WEB PLATES, FLANGE PLATES AND OTHER WELDED MATERIAL OVER 1" THICK ARE CARBON STEEL ASTM A373. EXISTING BOLTED AND OTHER WELDED MATERIAL 1" OR LESS IN THICKNESS ARE ASTM A7 CARBON STEEL.

EXISTING CONNECTIONS TYPICALLY USE 7/8"Ø HIGH STRENGTH BOLTS.

DATE	REVISION

ROSCOE O. FORD
REGISTERED PROFESSIONAL ENGINEER
No. 3731-S
HAWAII, U.S.A.

THIS WORK WAS PREPARED BY ME OR UNDER MY SUPERVISION

Roscoe O. Ford

STATE OF HAWAII
DEPARTMENT OF TRANSPORTATION
HIGHWAYS DIVISION

MAIN GIRDER - PARTIAL LONGITUDINAL ELEVATION

SAND ISLAND BASCULE BRIDGE
REHABILITATION PHASE II
PROJECT NO. BR-064-1(3)

SCALE: AS NOTED DATE: AUG. 15, 1991

SHEET No. S18 OF S21 SHEETS

ORIGINAL PLAN | SURVEY PLOTTED BY | DRAWN BY | TRACED BY | DESIGNED BY | QUANTITIES BY | CHECKED BY | DATE | NOTEBOOK No.

FED. ROAD DIST. NO.	STATE	FED. AID PROJ. NO.	FISCAL YEAR	SHEET NO.	TOTAL SHEETS
HAWAII	HAW.	BR-064-1 (3)	1990	26	30

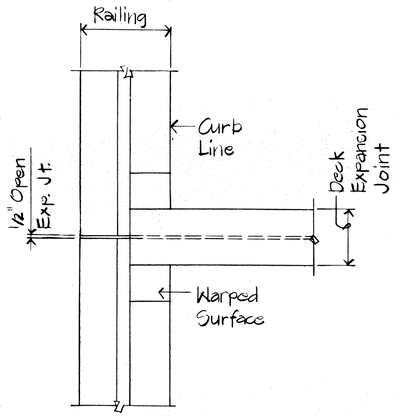

PLAN (D 519/519)
Scale: 1" = 1'-0"

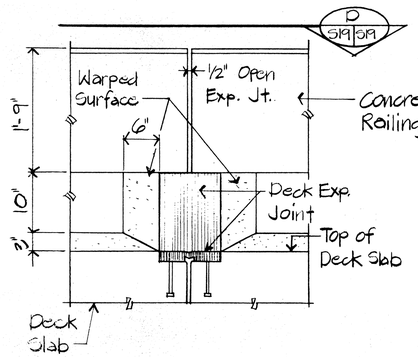

SECTION (C 519/519)
Scale: 1" = 1'-0"

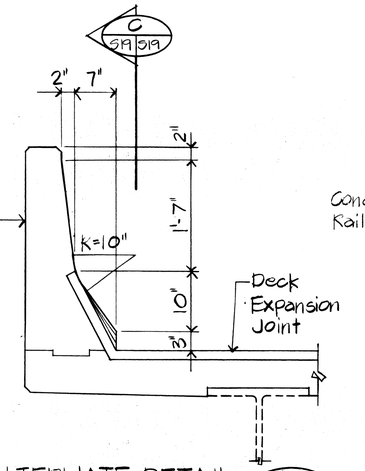

ALTERNATE DETAIL (B 519/519)
Scale: 1" = 1'-0"

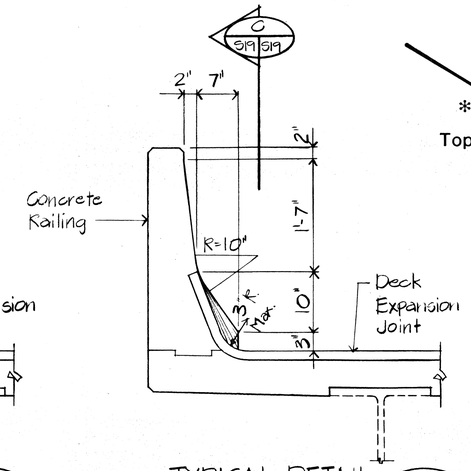

TYPICAL DETAIL (A 519/519)
Scale: 1" = 1'-0"

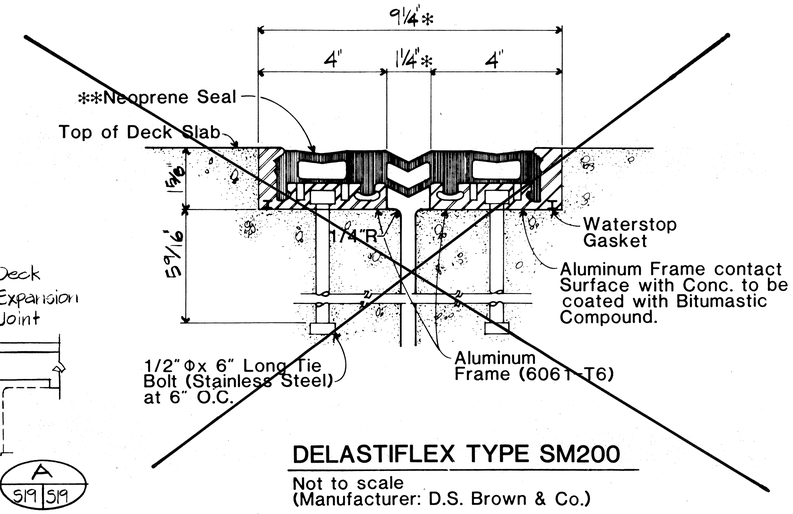

DELASTIFLEX TYPE SM200
Not to scale
(Manufacturer: D.S. Brown & Co.)

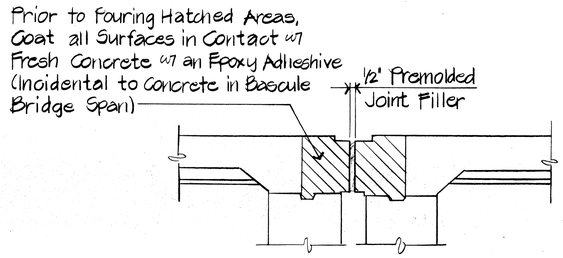

Hatched Areas shall be Poured a Minimum of 28 Days after the Deck Slab has been Poured. Expansion Joint Anchor Devices shall be located and secure on final positions per Manufacturer's Requirements.

SECTION (F 519/519)
Not to Scale

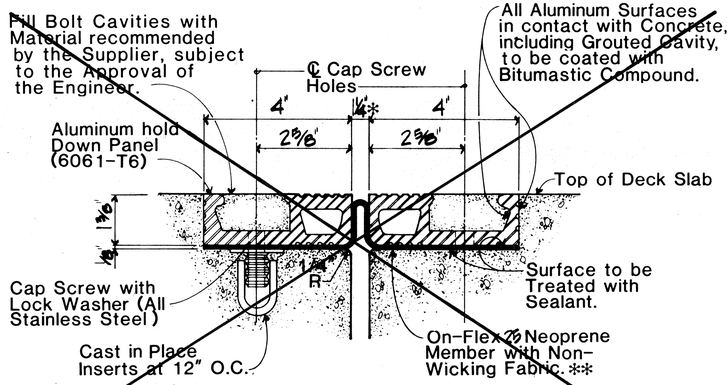

ON-FLEX 25
Not to scale
(Manufacturer: Structural Accessories Inc.)

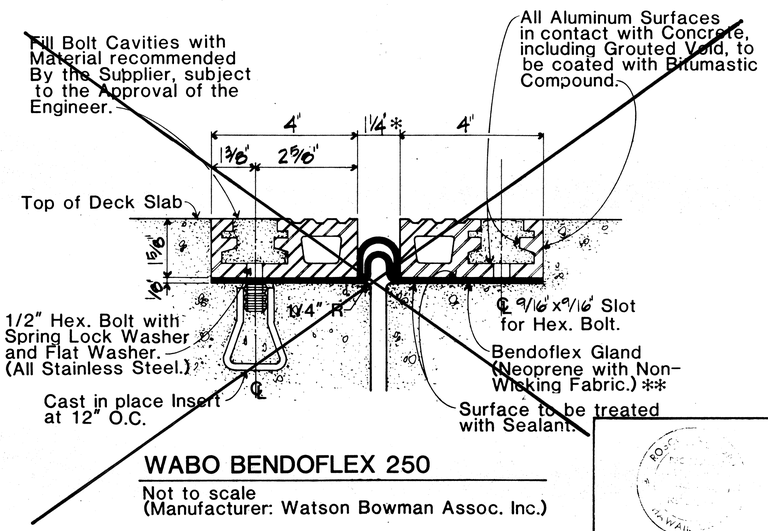

WABO BENDOFLEX 250
Not to scale
(Manufacturer: Watson Bowman Assoc. Inc.)

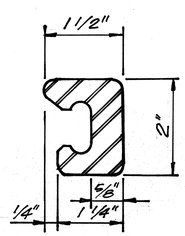

SSA STEEL RAIL

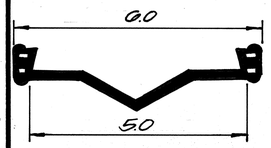

400L NEOPRENE EXTRUSION

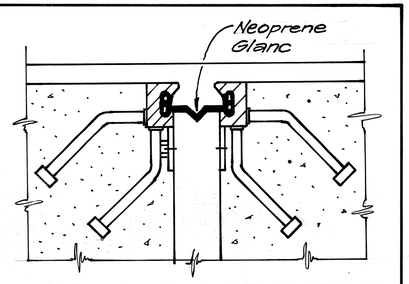

STEELFLEX - STRIP SEAL EXPANSION JOINT SYSTEMS
Not to Scale (Manufacturer: The D.S. Brown Company Substitute - Field Change No. 2

DECK EXPANSION JOINT NOTES

1. Three Alternate Deck Expansion Joint Systems are shown. Contractor has the Option of selecting any One of the Systems. The Contractor shall submit Detailed Shop Drawings of the selected Joint to the Engineer for Approval.
2. The Contractor also has the Option of using an Alternate Expansion Joint System provided it complies with the Plans and Specifications.

*Installation Width at 75° F.

**Seal Gland or Membrane shall be continuous across the Full Width of the Structure.

DATE	REVISION

THIS WORK WAS PREPARED BY ME OR UNDER MY SUPERVISION.
Roscoe O. Ford
Signature

STATE OF HAWAII
DEPARTMENT OF TRANSPORTATION
HIGHWAYS DIVISION

DECK EXPANSION JOINT DETAILS

SAND ISLAND BASCULE BRIDGE
REHABILITATION PHASE II
PROJECT NO. BR-064-1 (3)
SCALE: AS NOTED DATE: MARCH 1991
SHEET NO. 519 OF 521 SHEETS

ORIGINAL PLAN | SURVEY PLOTTED BY | DRAWN BY | TRACED BY | DESIGNED BY | QUANTITIES BY | CHECKED BY | DATE | NOTE BOOK | No.

FED. ROAD DIST. NO.	STATE	FED. AID PROJ. NO.	FISCAL YEAR	SHEET NO.	TOTAL SHEETS
HAWAII	HAW.	BR-064-1(3)	1991	27	38

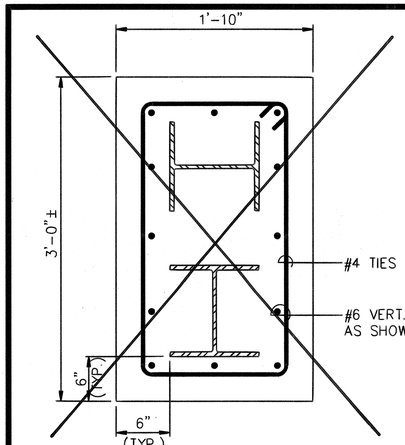

~~SECTION AT 2 PILES~~ ~~F~~ ~~S20 S20~~
~~SCALE : 1 1/2" = 1'-0"~~

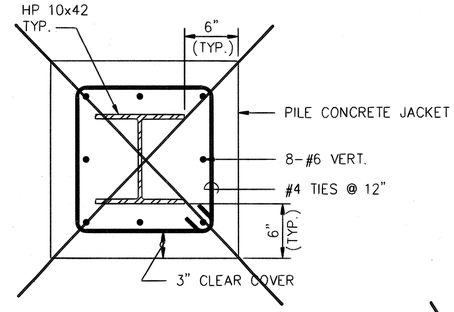

~~SECTION~~ ~~D~~ ~~S20 S20~~
~~SCALE : 1 1/2" = 1'-0"~~

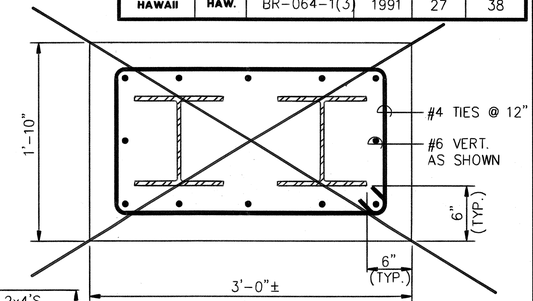

~~SECTION AT 2 PILES~~ ~~E~~ ~~S20 S20~~
~~SCALE : 1 1/2" = 1'-0"~~

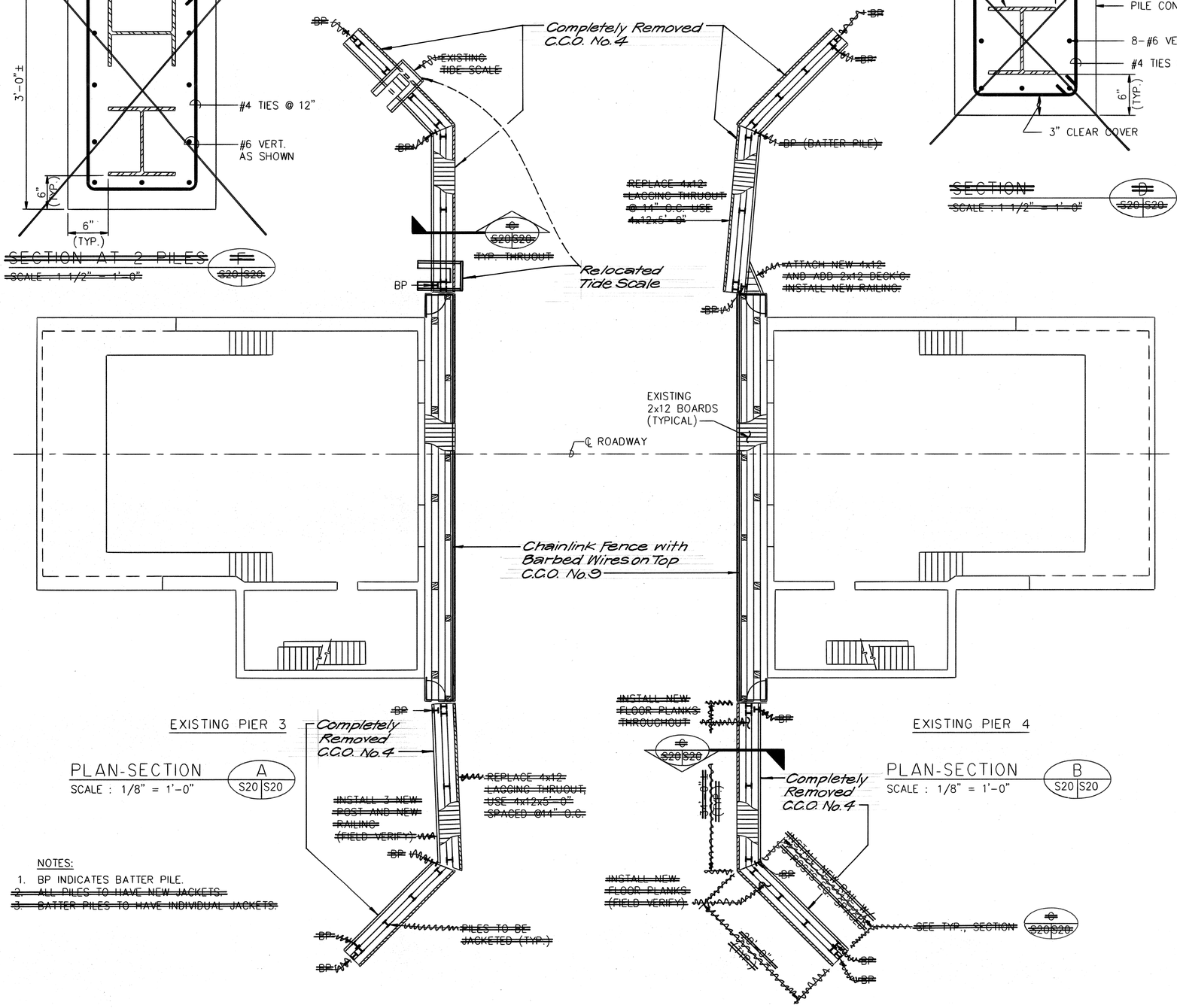

PLAN-SECTION A S20 S20
SCALE : 1/8" = 1'-0"

PLAN-SECTION B S20 S20
SCALE : 1/8" = 1'-0"

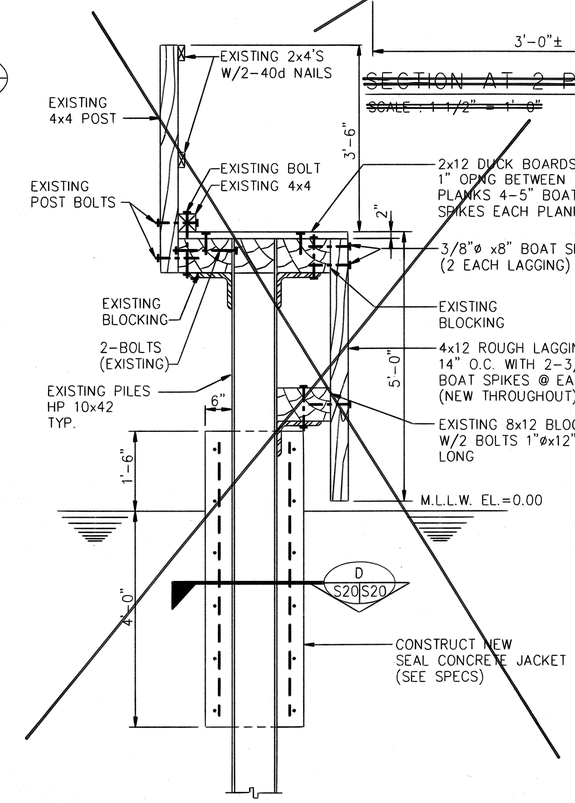

~~SECTION TYPICAL~~ ~~C~~ ~~S20 S20~~
~~SCALE : 3/4" = 1'-0"~~

NOTES:

1. BP INDICATES BATTER PILE.
2. ~~ALL PILES TO HAVE NEW JACKETS.~~
3. ~~BATTER PILES TO HAVE INDIVIDUAL JACKETS.~~

ROSCOE O. FORD
REGISTERED PROFESSIONAL ENGINEER
No. 3731-S
HAWAII, U.S.A.

THIS WORK WAS PREPARED BY ME OR UNDER MY SUPERVISION

Roscoe O. Ford

DATE	REVISION

STATE OF HAWAII
DEPARTMENT OF TRANSPORTATION
HIGHWAYS DIVISION

FENDER SECTIONS AND DETAILS

SAND ISLAND BASCULE BRIDGE
REHABILITATION PHASE II
PROJECT NO. BR-064-1(3)

SCALE: AS NOTED DATE: AUG. 15, 1991

SHEET No. S20 **OF** S21 **SHEETS**

ORIGINAL PLAN | NOTEBOOK | No. | SURVEY PLOTTED BY | DRAWN BY | TRACED BY | DESIGNED BY | QUANTITIES BY | CHECKED BY | DATE

FED. ROAD DIST. NO.	STATE	FED. AID PROJ. NO.	FISCAL YEAR	SHEET NO.	TOTAL SHEETS
HAWAII	HAW.	BR-064-1(3)	1991	28	38

NOTES:

1. CAP PL TAPERED BOX SPACER BLOCK SHALL BE FABRICATED FROM ASTM A36 STEEL AND HOT-DIP GALVANIZED AFTER FABRICATIONS.
2. CAP PL(s), TAPERED BOX SPACER BLOCK, ANCHOR BOLTS INCLUDING NUTS AND WASHERS AND OTHER APPURTENANCES SHALL BE INCIDENTAL TO BEAM TYPE GUARDRAIL AND WILL NOT BE PAID FOR SEPARATELY.

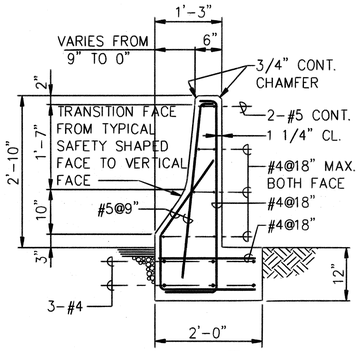

SECTION A
SCALE : 3/4" = 1'-0"
S21 | S21

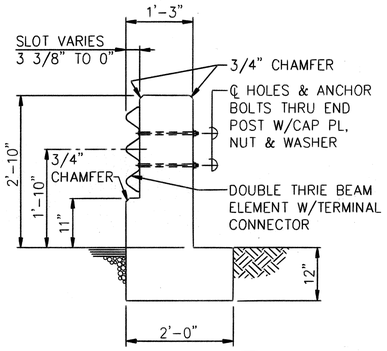

SECTION B
SCALE : 3/4" = 1'-0"
S21 | S21

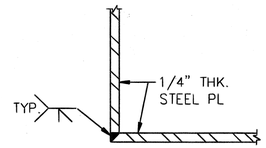

DETAIL I
NOT TO SCALE
S21 | S21

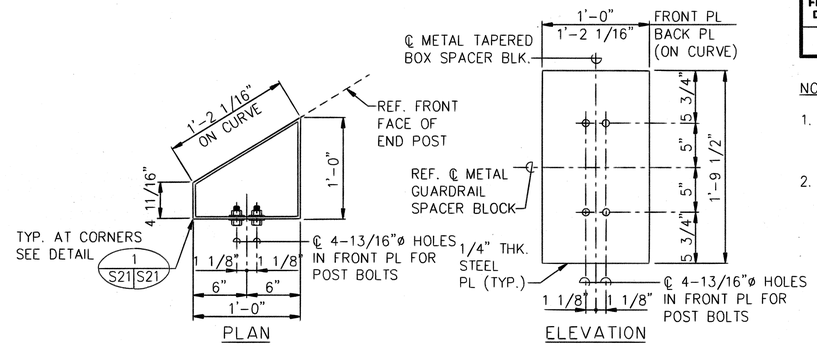

METAL TAPERED BOX SPACER BLOCK DETAIL
SCALE : 1 1/2"=1'-0"

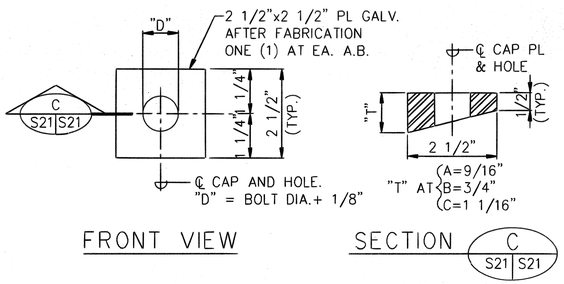

FRONT VIEW

SECTION C
S21 | S21

CAP (BEARING) PLATE DETAIL
NOT TO SCALE

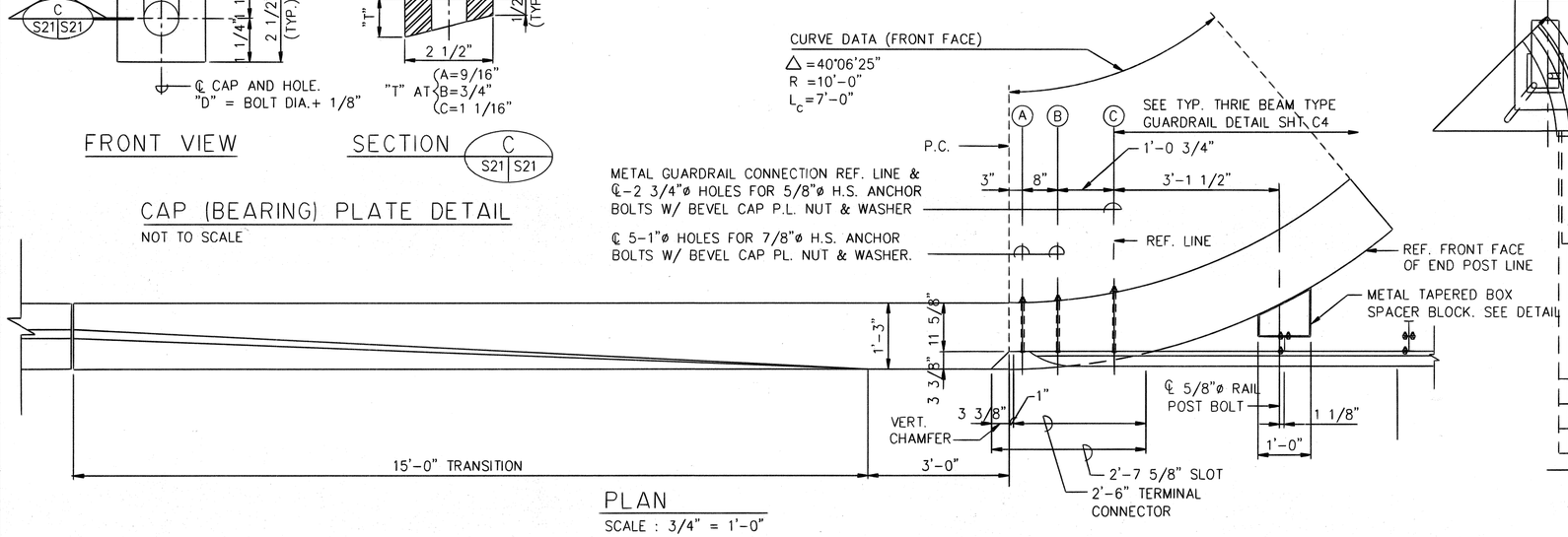

PLAN
SCALE : 3/4" = 1'-0"

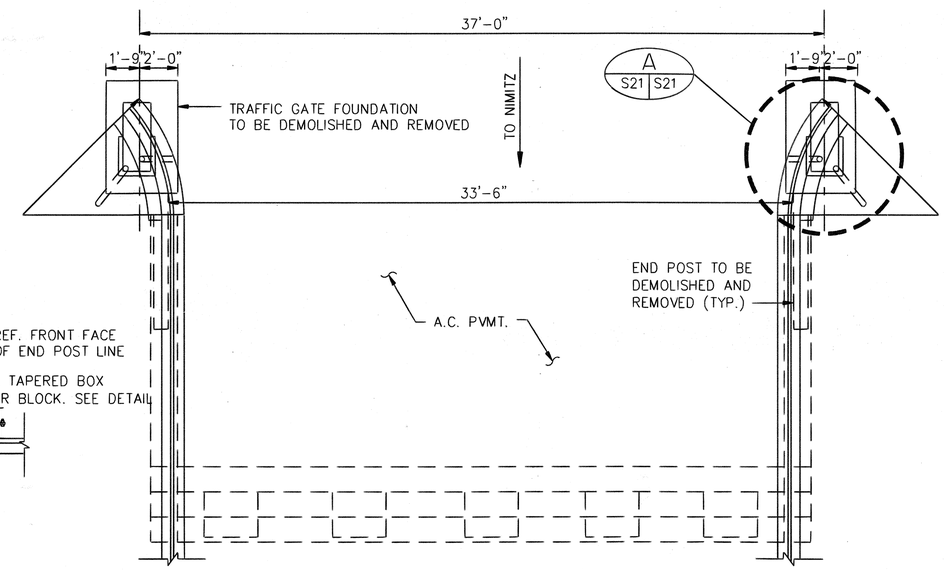

GUARDRAIL END POST-PLAN
SCALE : 1/4" = 1'-0"

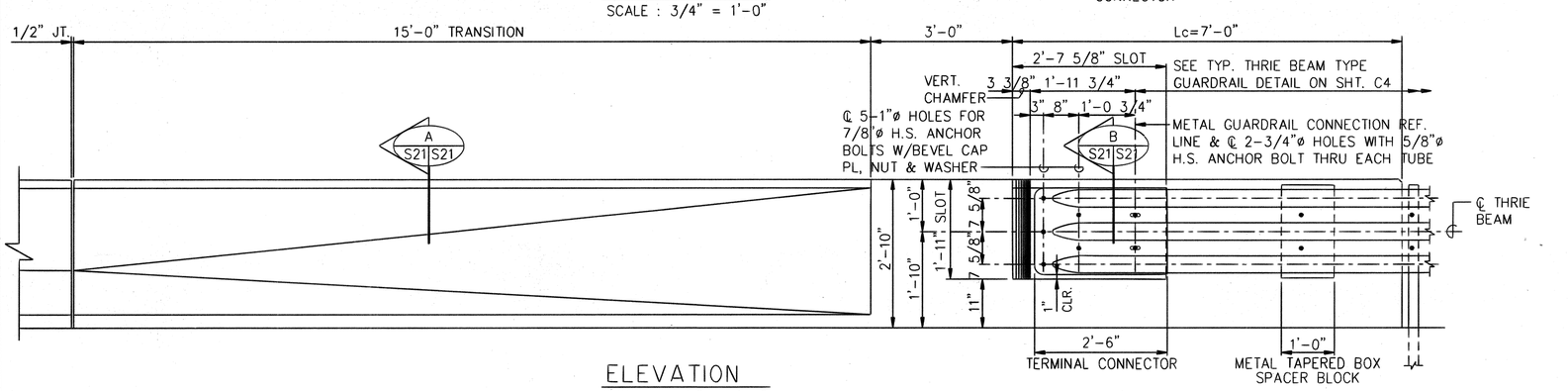

ELEVATION
SCALE : 3/4" = 1'-0"

ROSCOE O. FORD
REGISTERED PROFESSIONAL ENGINEER
No. 3731-S
HAWAII, U.S.A.

THIS WORK WAS PREPARED BY ME OR UNDER MY SUPERVISION
Roscoe O. Ford

STATE OF HAWAII
DEPARTMENT OF TRANSPORTATION
HIGHWAYS DIVISION

TYPICAL DETAILS

CONCRETE BRIDGE RAIL TRANSITION WITH CURVED END AND GUARDRAIL CONNECTION

SAND ISLAND BASCULE BRIDGE
REHABILITATION PHASE II
PROJECT NO. BR-064-1(3)

SCALE: AS NOTED DATE: AUG. 15, 1991

SHEET No. S21 OF S21 SHEETS

DATE	REVISION

ORIGINAL PLAN | NOTEBOOK No. | SURVEY PLOTTED BY | DRAWN BY | TRACED BY | DESIGNED BY | QUANTITIES BY | CHECKED BY | DATE