FED. ROAD DIST. NO.	STATE	FED. AID PROJ. NO.	FISCAL YEAR	SHEET NO.	TOTAL SHEETS
HAWAII	HAW.	F-064-1(2)	1987	103	151

INDEX OF BRIDGE DRAWINGS

ESTIMATED QUANTITIES

ITEM NO.	ITEM	UNIT	QUANTITIES
206.6200	STRUCTURE EXCAVATION FOR BRIDGES.	L.S.	3020 CY
206.7300	STRUCTURE BACKFILL FOR BRIDGES.	L.S.	(470 CY)
206.8500	FILTER MATERIAL FOR BRIDGES.	L.S.	(32 CY)
503.1092	CONCRETE IN BRIDGE (EXCEPT FOOTINGS AND SEAL)	L.S.	(2430 CY)
503.1093	CONCRETE IN BRIDGE FOOTING (EXCEPT SEAL)	L.S.	(1490 CY)
503.1094	CONCRETE IN SEAL.	L.S.	(1750 CY)
504.6500	KEEHI TYPE VI PRESTRESSED CONCRETE GIRDERS.	L.S.	(3670 LF)
505.0001	PILE DRIVING EQUIPMENT EXPENSE (NOT TO EXCEED $8000.00)	L.S.	($8000)
505.0010	PILE LOAD TEST.	EA.	2
505.0430	16½" PRESTRESSED CONCRETE PILES, FURNISHED.	L.F.	5200
505.0431	20" SQUARE PRESTRESSED CONCRETE PILES, FURNISHED.	L.F.	6630
505.4300	16½" PRESTRESSED CONCRETE PILES, DRIVEN.	L.F.	4860
505.4310	20" SQUARE PRESTRESSED CONCRETE PILES, DRIVEN.	L.F.	6330
505.9000	EXTENSIONS OR "BUILD-UPS" OF PILES.	F.A.	
505.9100	RETAPPING OF PILES.	F.A.	
505.9200	REPAIR OR REPLACEMENT OF ENGINEER'S EQUIPMENT.	F.A.	
505.9300	DYNAMIC INSTRUMENTATION AND TESTING.	F.A.	
507.0110	ALUMINUM RAILING	L.F.	1350
507.5100	CONCRETE RAILING TYPE A	L.F.	693
507.5200	CONCRETE RAILING TYPE B	L.F.	670
507.5300	CONCRETE RAILING TYPE C	L.F.	702
602.0091	REINFORCING STEEL IN BRIDGE.	L.S.	(953000 lbs)
602.0092	REINFORCING STEEL IN FOOTING.	L.S.	(143000 lbs)
612.0100	GROUTED RUBBLE PAVING.	C.Y.	396
647.1000	SERVICE EQUIPMENT AND CABINET ON CONCRETE PAD, PULL BOXES, NAVIGATION, AND CENTER CHANNEL LIGHTS, AND DUCT LINE SYSTEM FOR THE BRIDGE.	L.S.	
650.0100	REVETMENT.	C.Y.	1289
699.1200	BRIDGE MOBILIZATION (NOT TO EXCEED 6% OF THE SUM OF ALL BRIDGE ITEMS EXCLUDING THIS ITEM)	L.S.	

ABBREVIATIONS

A
- Abt. Abutment
- & And
- @ At

B
- ℄ Baseline.
- Bm. Beam.
- Brg. Bearing.
- Blk. Block.
- B Bottom
- Bot. Bottom.

C
- ℄ Centerline
- Clr. Clear
- Conc. Concrete
- Constr. Construction.
- C.J. Construction Joint
- Cont. Continuous.
- C.Y. Cubic Yard.

D
- Det. Detail
- Diag. Diagonal
- Dia. ϕ Diameter
- Dwg. Drawing

E
- Ea. Each
- E.F. Each Face
- E.W. Each Way
- El. Elevation
- Elev. Elevation
- Eq. Equal
- Exp. Expansion.
- Exist. Existing
- E.J. Expansion Joint

F
- Ft. Foot, Feet
- F.M. Force Main.
- F.A. Force Account

G
- Ga. Gage
- Galv. Galvanize

H
- Hex. Hexagon.
- Horiz. Horizontal

I
- I.D. Inside Diameter
- Inv. Invert.

J
- Jt. Joint

L
- L Lays
- L.F. Lineal Feet.
- Longit. Longitudinal
- L.S. Lump Sum
- Lg. Long

M
- Mfg. Manufacturer
- Max. Maximum.
- Mech. Mechanical
- Met. Metal
- Min. Minimum
- Misc. Miscellaneous

N
- N.T.S. Not To Scale

O
- O.C. On Center
- O.D. Outside Diameter

P
- Pt. Point
- Pl. Plate
- PJF Premolded Joint Filler.

R
- R= Radius
- Ref. Reference
- Reinf. Reinforcing
- R/W Right of Way.
- R.P. Roofing Paper.

S
- S.I. Sand Island
- Sect. Section
- Sht. Sheet
- Sp. Space
- Sta. Station
- Stirr. Stirrup
- Symm. Symmetrical
- S.S. Stainless Steel

T
- Thk. Thick
- Typ. Typical
- T Top

V
- Vert. Vertical

W
- W/ With

MILTON G. OKUBO REGISTERED PROFESSIONAL ENGINEER No. 4320-S HAWAII, U.S.A.

THIS WORK WAS PREPARED BY ME OR UNDER MY SUPERVISION.

Milton Okubo

SURVEY PLOTTED BY	DATE
DRAWN BY	"
TRACED BY	"
DESIGNED BY	"
QUANTITIES BY	"
CHECKED BY	"
ORIGINAL PLAN	NOTE BOOK No.

DATE	REVISION

STATE OF HAWAII
DEPARTMENT OF TRANSPORTATION
HIGHWAYS DIVISION

INDEX OF BRIDGE DRAWINGS AND ESTIMATED QUANTITIES

SAND ISLAND ROAD WIDENING
2ND. BRIDGE AND APPROACHES
FEDERAL AID PROJECT NO. F-064-1(2)

SCALE: DATE: JUN, 1986

SHEET No. S-1 OF 30 SHEETS

FED. ROAD DIST. NO.	STATE	FED. AID PROJ. NO.	FISCAL YEAR	SHEET NO.	TOTAL SHEETS
HAWAII	HAW.	F-064-1 (2)	1987	104	151

GENERAL NOTES

General Specifications: State of Hawaii, Department of Transportation Standard Specifications for Road and Bridge Construction, 1985 and Special Provisions

Design Specifications: AASHTO Standard Specifications for Highway Bridges, Thirteenth Edition, 1983

Design Loads:

- Dead Load: An allowance of 20 psf for future wearing surface of asphalt concrete has been included in dead load calculations. Concrete unit weight of 160 pcf has been assumed for dead load calculations

- Live Load: HS20-44 or Interstate Loading

Design Stresses: Allowable concrete stresses used in design shall conform to AASHTO Standard Specifications for Highway Bridges, 13th Edition and the following:

Concrete	fc'	fc
Class A	3,000 psi	1,200 psi
Class B	2,500 psi	1,000 psi
Class BD	3,750 psi	1,500 psi
Seal	4,000 psi	1,600 psi
fc' = 4,500	4,500 psi	1,800 psi

Reinforcing Steel

Grade 40 fs = 20000 psi
Grade 60 fs = 24000 psi

Materials:

- Cement used in all bridge concrete elements shall be Type II.

- All concrete shall be Class A unless noted otherwise.

- Concrete for bridge deck shall be Class BD.

- Concrete for pier shafts, pier cap and box girders (deck, soffit, girders) shall have f'c = 4500 psi

- Concrete for Seal Concrete shall have an f'c = 4,000 psi and conform to the Special Provisions.

- All reinforcing steel shall conform to the requirements of ASTM A615 and shall be deformed, Grade 40 unless noted otherwise.

- All structural steel shall be ASTM A36, hot dip galvanized, after fabrication unless noted otherwise.

- All anchor bolts, washers and nuts shall conform to the requirements of ASTM A307, hot dip galvanized, unless noted otherwise.

- Welding electrodes for structural steel shall be E70.

- Welding electrodes for stainless steel shall be E316.

- Elastomeric bearing pads shall be of 60± 5 Hardness or as noted.

- Concrete for counterweight shall be Class B.

Reinforcement:

- The minimum clear cover for reinforcing steel shall be as follows unless otherwise specified on the plans;

  Deck slabs for prestressed girders:
  Top bars.....1-1/2"
  Bottom bars.....1-1/4"
  Abutments, and
  retaining walls.....2"

  Bridge Piers to ties.....4"

  Concrete cast against and
  permanently exposed to
  earth.....3"

  Concrete exposed to abrasion
  or sea water.....4"

  Concrete piles in sea water.....3"

- Reinforcing bars shall be detailed in accordance with ACI Manual of Standard Practice for Detailing Reinforced Concrete Structures unless noted otherwise.

Construction Methods:

- See Standard Specifications for Road and Bridge Construction and Special Provisions.

- The top of concrete deck slab shall be constructed to attain the roadway vertical and horizontal curves indicated on the plans.

- Except as otherwise noted all vertical dimensions are measured plumb.

- Girder concrete seats receiving elastomeric pads shall be poured monolithically with the supporting structure. Top of concrete seats shall be finished with a steel trowel to a smooth level surface to the elevation shown on the plans. All points on the surface shall be level to within 1/16". The bottoms of elastomeric bearing pads shall be fastened to the concrete seats with adhesives approved by the Engineer.

- Spread footings shall be excavated and poured to neat lines when called for on the plans. In the event of over-excavation, the space between the spread footing and ground shall be filled with a minimum of Class D concrete at the Contractor's expense and as directed by the Engineer. Over-excavated pile footings may be backfilled with soil to attain the proper elevation.

- Abutments shall be backfilled to an elevation no higher than the elevation of the bottom of girders until after the girders are in place.

- Materials, components and structures treated with preservatives such as creosote, paints, anti-rust and anti-fouling compounds should be allowed to dry for at least one week before being placed in contact with sea water.

- Fabrication and assembling of structures shall take place on fast lands to the maximum extent possible.

- Turbidity shall be controlled during dredging by using silt curtains or equivalent means.

Foundation Notes:

- A structure foundation report entitled "Subsurface Investigation Report, Proposed Fixed-Span Bridge, Sand Island Access Road Improvements, Honolulu, Oahu, Hawaii" has been prepared for this project. A copy of this report is available for review at the Department of Transportation.

- Allowable pile capacity:

  Intermediate piers - 60 tons
  (16-1/2" octagonal piles)
  Center piers - 70 tons
  (20" square piles)
  Abutments - 75 tons
  (16-1/2" octagonal piles)

- In general the design, construction and installation of the piles shall be in accordance with Section 505 of the 1985 Standard Specifications for Bridge and Road Construction of the State of Hawaii, Department of Transportation and Special Provisions.

- Concrete blocks and various debris were noted at the Sand Island Abutment. These items shall be removed by the Contractor prior to pile driving operations as directed by the Engineer. (Incidental to Pile Driving Operations).

- In driving each group of piles, the Contractor shall start from the center of the group and proceed outward.

- Concrete in prestressed concrete piles shall have a minimum 28 day compressive strength of 5000 psi.

- Test piles shall be driven at each abutment and intermediate pier locations as indicated in the plans.

- A full-scale pile load test shall be completed at both Pier #4 and Sand Island Abutment. Additional load tests may be required should erratic driving conditions be encountered, subject to approval by the Engineer. Pile load tests shall be in strict accordance with the recommended procedures of Hawaii Test Method HWY-TS6 with the following additional requirements:

  - A total of three independent measuring systems shall be utilized to monitor pile deflections. Dial gages shall be utilized as the primary system.

  - A total of four dial gages shall be utilized to determine any uneven settlement or tilting of the tested pile during loading. A dial gage shall be placed on each alternating corner of the pile.

  - Level readings shall be taken on referenced beams and the reaction system.

  - The load test shall be completed using the cyclic loading procedure. The load test shall be run to failure to verify the pile capacity.

- Pile load tests shall be performed by the Contractor and monitored by the Engineer. The Contractor shall supply all materials, equipment, tools and incidentals necessary to complete the work except for loading jacks and deflection dials.

Pretensioning (Prestressed Girders) NOTE: PRESTRESSED GIRDERS WERE MANUFACTURED BY WASHINGTON TECHNOLOGY, INC. SEE C.O.7

- Concrete shall have a minimum ultimate 28 day compressive strength of 6500 psi. Minimum ultimate concrete strength before release of strands is
  f'_{ci} = 5,000 psi.

- Pretensioned strands shall be 1/2" dia. 7 wire stress relieved steel strands (Area = 0.1531 in^2) with an ultimate strength of 270 ksi.

- Total long term losses due to creep, shrinkage, elastic shortening and relaxation of steel = 45 ksi.

- The calculated camber includes the effect of the initial prestress loss and the weight of the girder after immediate removal from forms. The actual camber shall not exceed the calculated camber shown on the plans by more than 100%.

- The dead load deflection indicated accounts for the continued increase in upward camber and the downward deflection due to girder weight, slab and diaphragms.

- Strand pattern shall be symmetrical about the longitudinal centerline of the girder.

- Strands shall be released in such a manner as to minimize lateral eccentricity and strand slippage.

- Contractor shall submit his proposed strand pattern and sequence of release to the Engineer for review.

- Care should be taken during curing to avoid any lateral deflection of the girder and during transporting and erection.

- Lifting devices shall be placed as close as possible to the centerline of bearings of the girder. Details and locations of lifting devices shall be submitted to the Engineer for review. Such review does not relieve the Contractor of his responsibilities should the beam be damaged due to failure of the lifting device.

- Allowable concrete stresses:

  Temporary compressive stress at release = 3000 psi

  Compressive stress after losses = 2600 psi

  Temporary tensile stress at release = 212 psi

  Tensile stress after losses at service load = 0.

- The minimum clear cover for prestressed and non-prestressed steel shall be 1".

Construction Sequence

1. Install and construct foundation for Abutments and Piers.

2. Construct Pier Shafts, and Abutments. Construct the Box Pier bottom slab and webs for both the Box Girder and Counterweight Box Girder section. Forms for webs shall not be removed for a minimum of 7 days after placing of web concrete and concrete cylinder strength = 3,000 psi.

3. Remove web forms and place concrete for Counterweight.

4. Place top slab of Box Piers. Top slab concrete shall not be placed until the concrete for counterweight has a minimum concrete cylinder strength of 1,500 psi.

5. Falsework and forms shall be designed to support the entire Dead Load of the Box Pier section and counterweight.

6. Release of falsework for the Box Piers shall be a minimum of 28 days after placing concrete for the top slab and the required 28 days strength is obtained. Falsework shall be released evenly on both sides of the Pier Shaft.

7. Girders for Span 1 shall be erected before girders for Span 2 are erected. Girders for Span 5 shall be erected before girders for Span 4 are erected. Erect girders for Span 3 last.

8. Place suspended deck slab for Span 1 before placing suspended deck slab for Span 2. Place suspended deck slab for Span 5 before placing suspended deck slab for Span 4. Place suspended deck slab for Span 3 last.

9. Construct concrete railings, Install deck expansion joints and make closure pours.

General:

- The Contractor shall verify the location of any existing utility lines and notify the respective owners before commencing the work of excavation or the driving of piles. Damages to utility lines, that are to remain, caused by the Contractor shall be repaired at his expense.

- Construction joints shall be located as shown on the plans unless otherwise approved by the Engineer.

- Unless otherwise noted, all exposed concrete edges shall have a 3/4" chamfer.

ROSCOE O. FORD
REGISTERED PROFESSIONAL ENGINEER
No. 3731-S
HAWAII, U.S.A.

THIS WORK WAS PREPARED BY ME OR UNDER MY SUPERVISION
Roscoe O. Ford

DATE	REVISION

STATE OF HAWAII
DEPARTMENT OF TRANSPORTATION
HIGHWAYS DIVISION

GENERAL NOTES

SAND ISLAND ROAD WIDENING
2ND. BRIDGE AND APPROACHES
FEDERAL AID PROJECT NO. F-064-1(2)

SCALE: AS NOTED DATE: JUN, 1986

SHEET No.S-2 OF 30 SHEETS

ORIGINAL PLAN | SURVEY PLOTTED BY | DRAWN BY | TRACED BY | DESIGNED BY | QUANTITIES BY | CHECKED BY | DATE | NOTE BOOK | No.

"AS-BUILT"

FED. ROAD DIST. NO.	STATE	FED. AID PROJ. NO.	FISCAL YEAR	SHEET NO.	TOTAL SHEETS
HAWAII	HAW.	F-064-1 (2)	1987	105	151

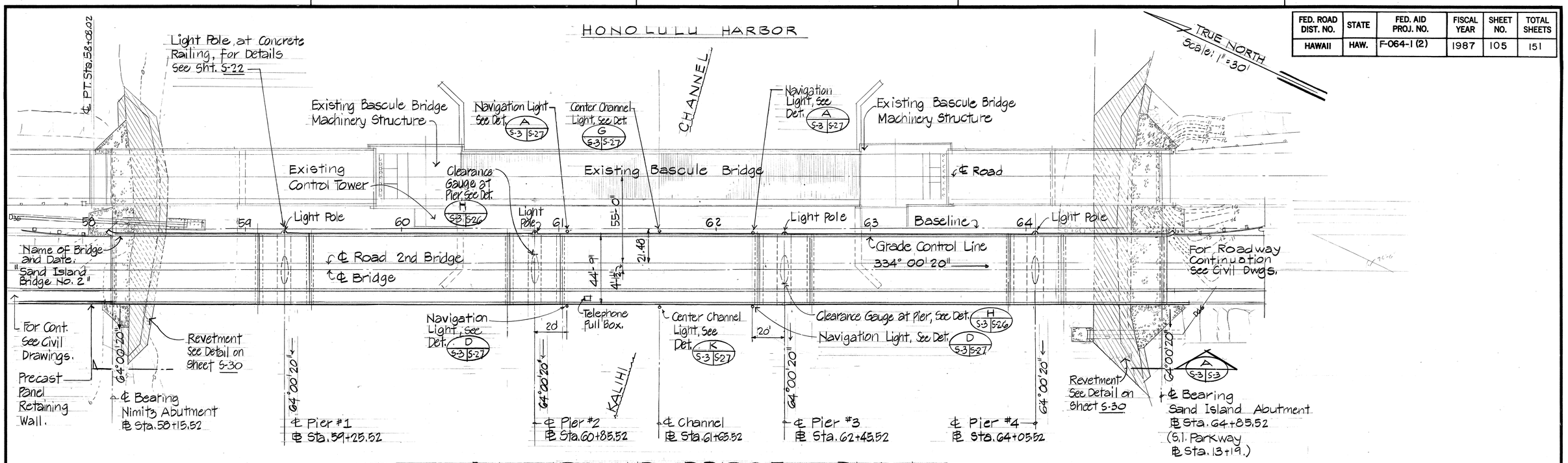

SAND ISLAND 2ND. BRIDGE PLAN

Scale: 1" = 30'

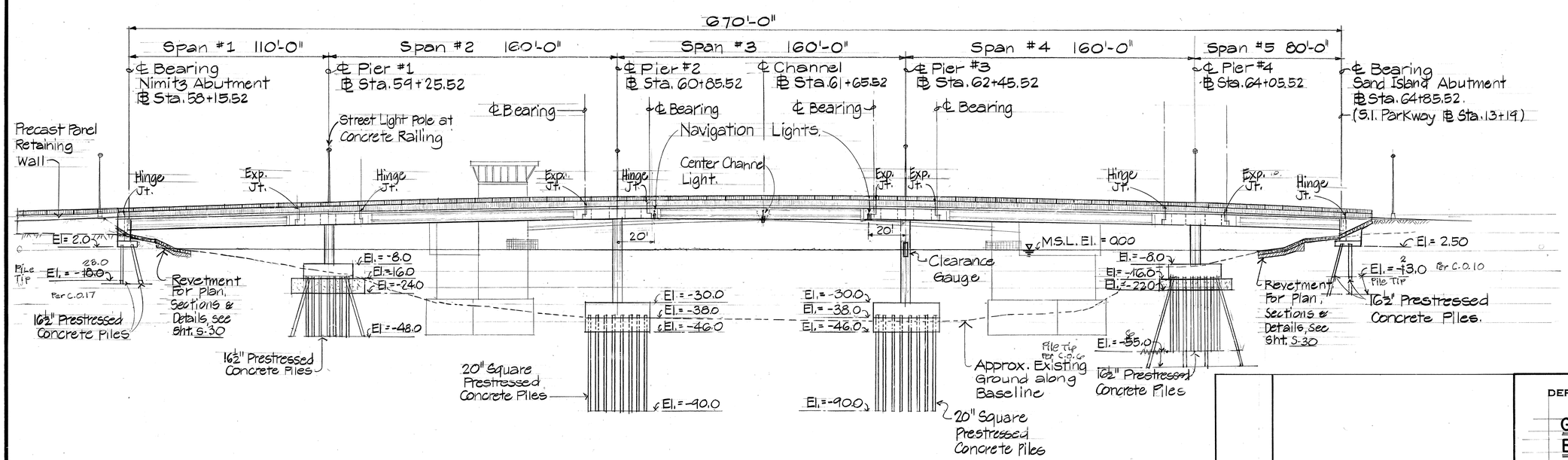

SAND ISLAND 2ND. BRIDGE ELEVATION

Scale: 1" = 30'

A S-3 S-3

DATE	REVISION

MYRON G. OKUBO REGISTERED PROFESSIONAL ENGINEER No. 4320-S HAWAII, U.S.A.

THIS WORK WAS PREPARED BY ME OR UNDER MY SUPERVISION.

Myron Okubo

STATE OF HAWAII
DEPARTMENT OF TRANSPORTATION
HIGHWAYS DIVISION

GENERAL PLAN AND BRIDGE ELEVATION

SAND ISLAND ROAD WIDENING
2ND. BRIDGE AND APPROACHES
FEDERAL AID PROJECT NO. F-064-1(2)

SCALE: 1" = 30' DATE: JUN, 1986

SHEET No. S-3 OF 30 SHEETS

ORIGINAL PLAN | SURVEY PLOTTED BY | DRAWN BY | TRACED BY | DESIGNED BY | QUANTITIES BY | CHECKED BY | DATE | NOTE BOOK No. | SHEET

"AS-BUILT"

FED. ROAD DIST. NO.	STATE	FED. AID PROJ. NO.	FISCAL YEAR	SHEET NO.	TOTAL SHEETS
HAWAII	HAW.	F-064-1(2)	1987	106	151

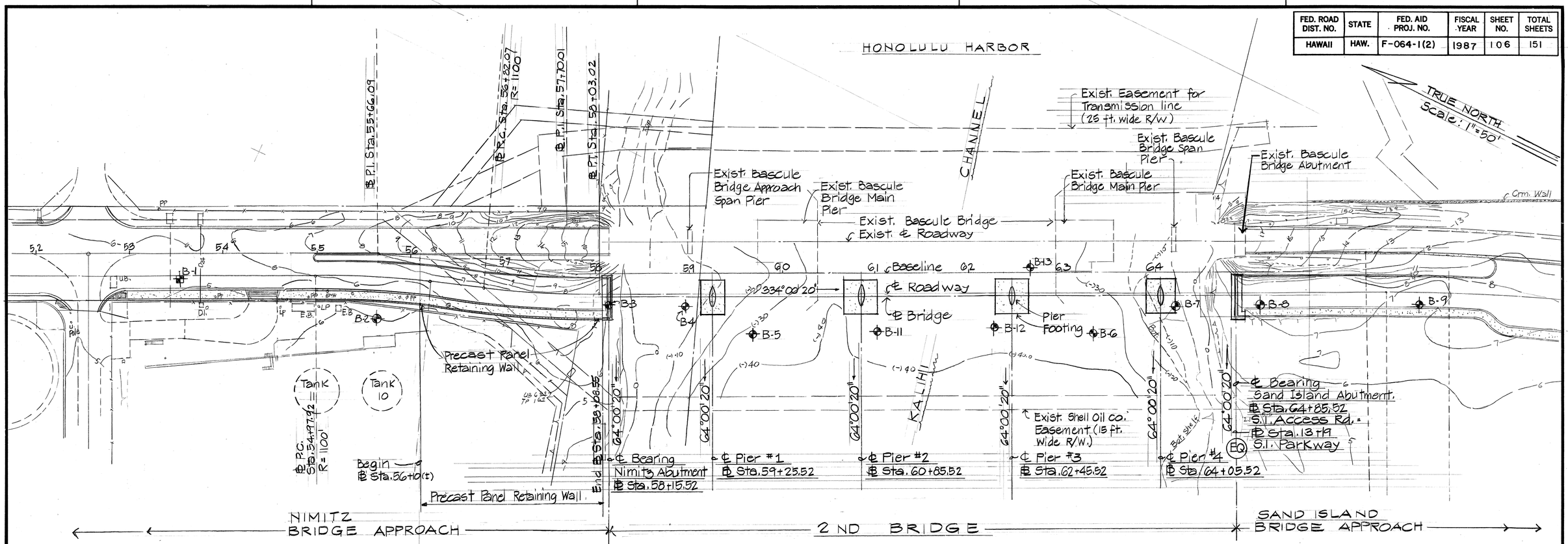

2ND. BRIDGE FOUNDATION PLAN

Scale: 1" = 50'

Notes

1. All Elevations are referenced to Mean Sea Level (M.S.L.)
2. All Stations are referenced to Roadway Baseline (℄), unless otherwise noted.
3. ⊕ B-3 Denotes Boring #3, See Boring Logs on Sheets BL-1, BL-2, BL-3, & BL-4.
4. Pier Footing: For Details see Sheet S-10
5. Nimitz Abutment: For Plan and Sections, see Sheet S-6.
6. SAND Island Abutment: For Plan and Sections, see Sheet S-7.
4. ✚ B-1 Denotes Test Pit, See Sheet BL-2.

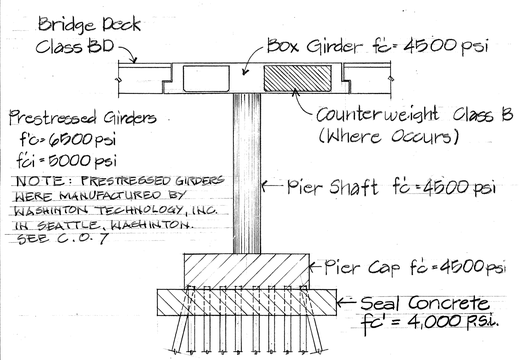

CONCRETE STRENGTH OF BRIDGE COMPONENTS

Not To Scale

MYRON G. OKUBO REGISTERED PROFESSIONAL ENGINEER No. 4320-S HAWAII, U.S.A.

THIS WORK WAS PREPARED BY ME OR UNDER MY SUPERVISION

Myron Okubo

DATE	REVISION

STATE OF HAWAII
DEPARTMENT OF TRANSPORTATION
HIGHWAYS DIVISION

FOUNDATION PLAN

SAND ISLAND ROAD WIDENING
2ND. BRIDGE AND APPROACHES
FEDERAL AID PROJECT NO. F-064-1(2)

SCALE: 1" = 50' DATE: JUN, 1986

SHEET No. S-4 OF 30 SHEETS

ORIGINAL PLAN | SURVEY PLOTTED BY | DRAWN BY | TRACED BY | DESIGNED BY | QUANTITIES BY | CHECKED BY | DATE | NOTE BOOK | No.

"AS-BUILT"

FED. ROAD DIST. NO.	STATE	FED. AID PROJ. NO.	FISCAL YEAR	SHEET NO.	TOTAL SHEETS
HAWAII	HAW.	F-064-1(2)	1987	107	151

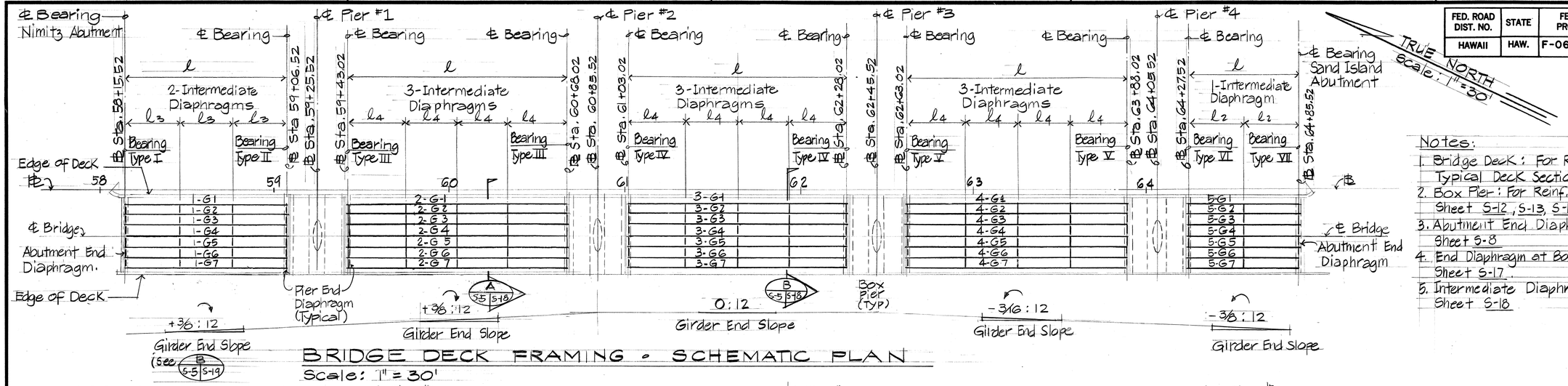

BRIDGE DECK FRAMING - SCHEMATIC PLAN

Scale: 1" = 30'

Notes:

1. Bridge Deck: For Reinf. and Details, see Typical Deck Section on Sheet S-18
2. Box Pier: For Reinf. and Details, see Sheet S-12, S-13, S-14 & S-15.
3. Abutment End Diaphragm: For Details, see Sheet S-8
4. End Diaphragm at Box Pier: For Details, see Sheet S-17.
5. Intermediate Diaphragm: For Details, see Sheet S-18

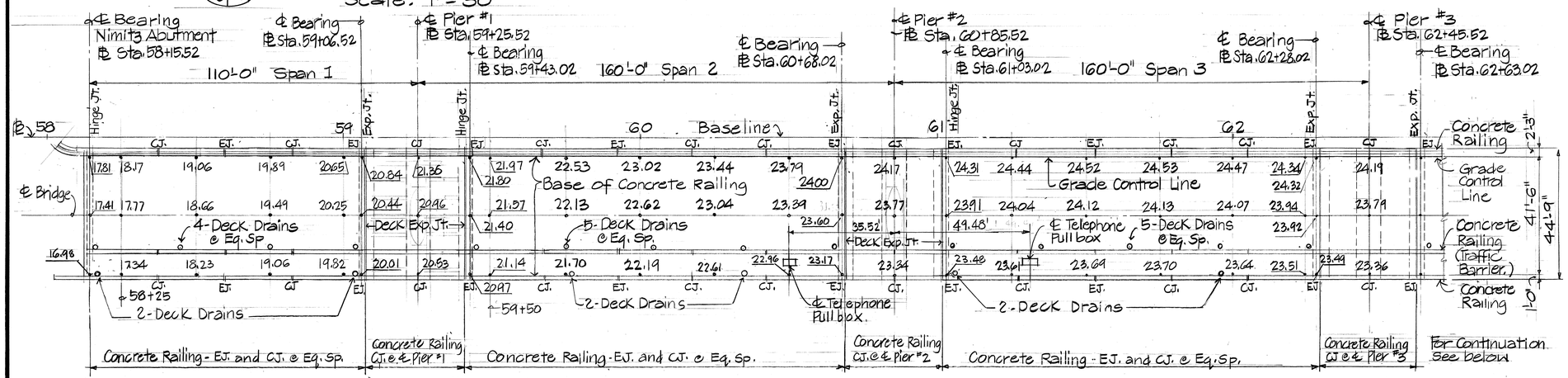

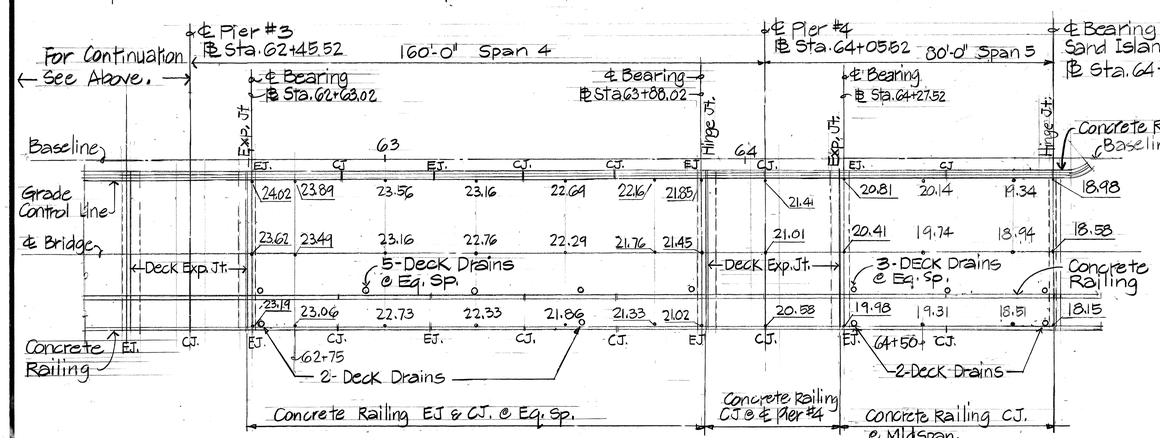

FINISHED DECK ELEVATIONS - PLAN

Scale: 1" = 20'-0" (After Immediate and Long Term Deflection.)

Notes:

1. Finished Deck Elevations: Given at 25' intervals along Baseline unless noted otherwise.
2. Deck Drains: As shown. See Details on Sht. S-120
3. For Concrete Railing Joints Details see Sht. S-23.

LEGEND

Symbol/ Abbreviation	Description
°	6"ϕ Deck Drain, Typ.
18.51	Finish Deck Elevation.
CJ	Construction Joint at Concrete Railing.
EJ.	Expansion Joint at Concrete Railing.

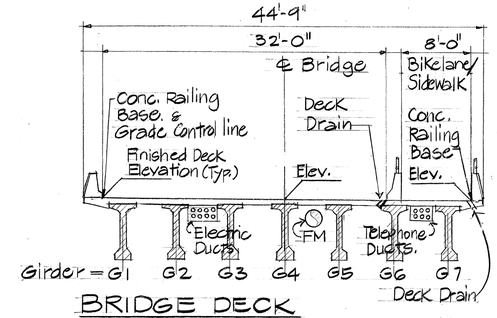

BRIDGE DECK

N.T.S.

MYRON G. OKURO REGISTERED PROFESSIONAL ENGINEER No. 4320-S HAWAII, U.S.A.

THIS WORK WAS PREPARED BY ME OR UNDER MY SUPERVISION

Myron Okuro

DATE	REVISION
9/1/87	Rev. Finished Deck Elev. Plan. Deck Drain size callout.

STATE OF HAWAII
DEPARTMENT OF TRANSPORTATION
HIGHWAYS DIVISION

DECK FRAMING PLAN & DECK ELEVATIONS

SAND ISLAND ROAD WIDENING
2ND. BRIDGE AND APPROACHES
FEDERAL AID PROJECT NO. F-064-1(2)

SCALE: AS NOTED. DATE: JUN, 1986

SHEET NO. S-5 OF 30 SHEETS

ORIGINAL PLAN | SURVEY PLOTTED BY | DRAWN BY | TRACED BY | DESIGNED BY | QUANTITIES BY | CHECKED BY | DATE | NOTE BOOK | No.

107 R

FED. ROAD DIST. NO.	STATE	FED. AID PROJ. NO.	FISCAL YEAR	SHEET NO.	TOTAL SHEETS
HAWAII	HAW.	F-064-1(2)	1987	108	151

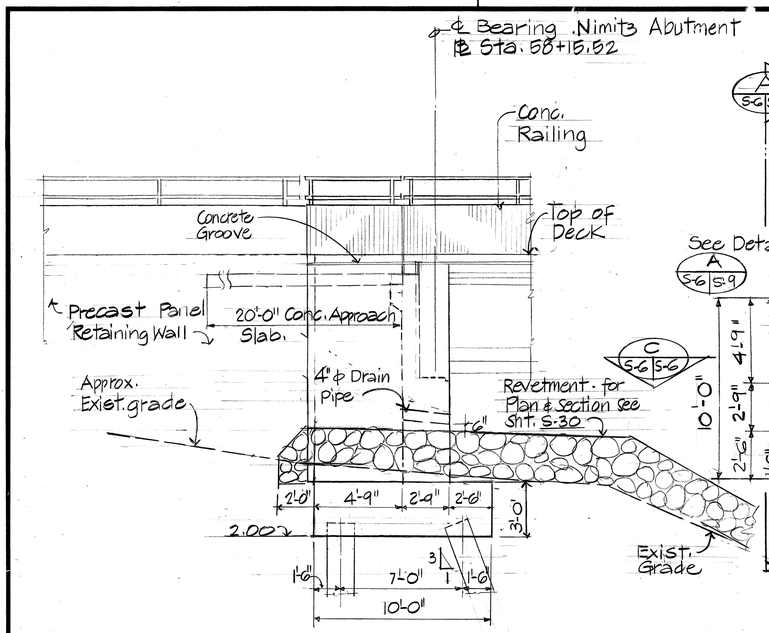

SIDE WALL ELEVATION (A S-6 | S-6)
Scale: 1/4" = 1'-0"

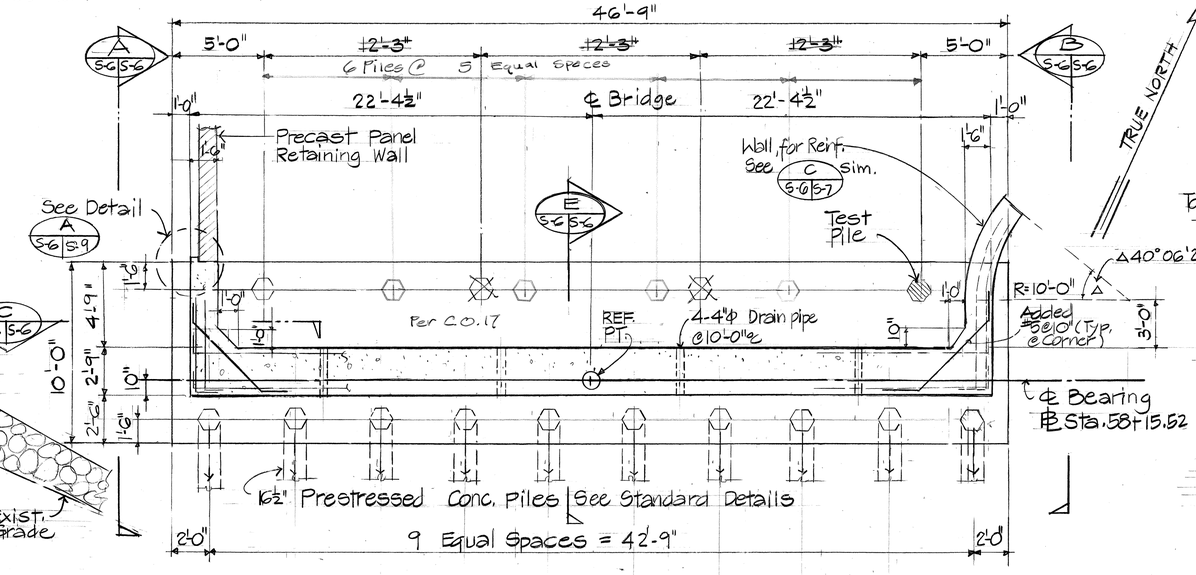

NIMITZ ABUTMENT FOUNDATION PLAN
Scale: 1/4" = 1'-0"

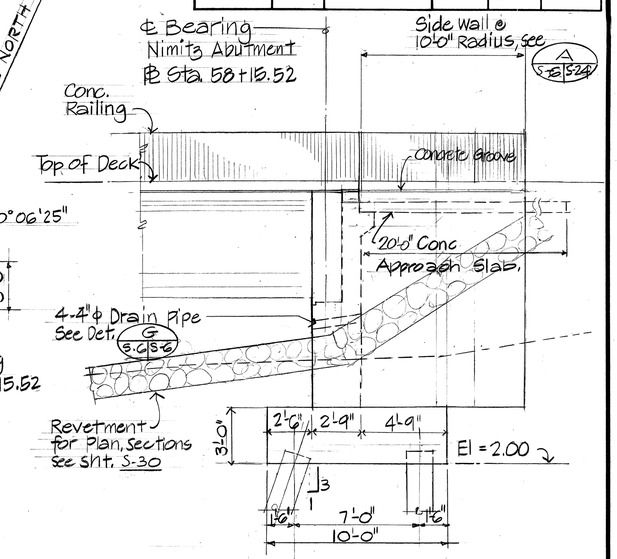

SIDE WALL ELEVATION (B S-6 | S-6)
Scale: 1/4" = 1'-0"

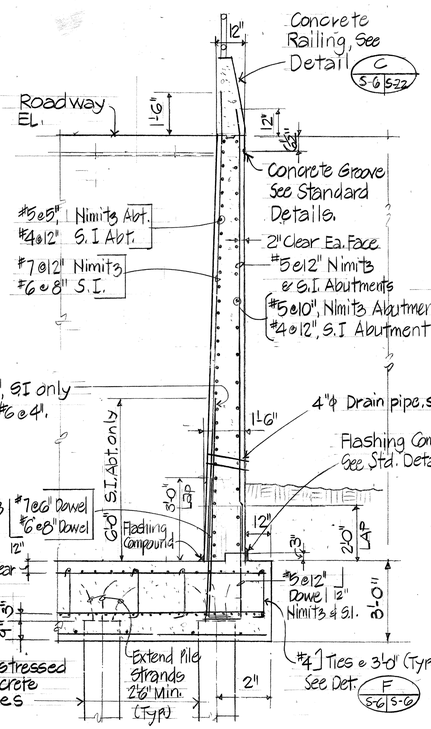

SECTION (C S-6 | S-6)
Scale: 3/8" = 1'-0"
S-9, S-7

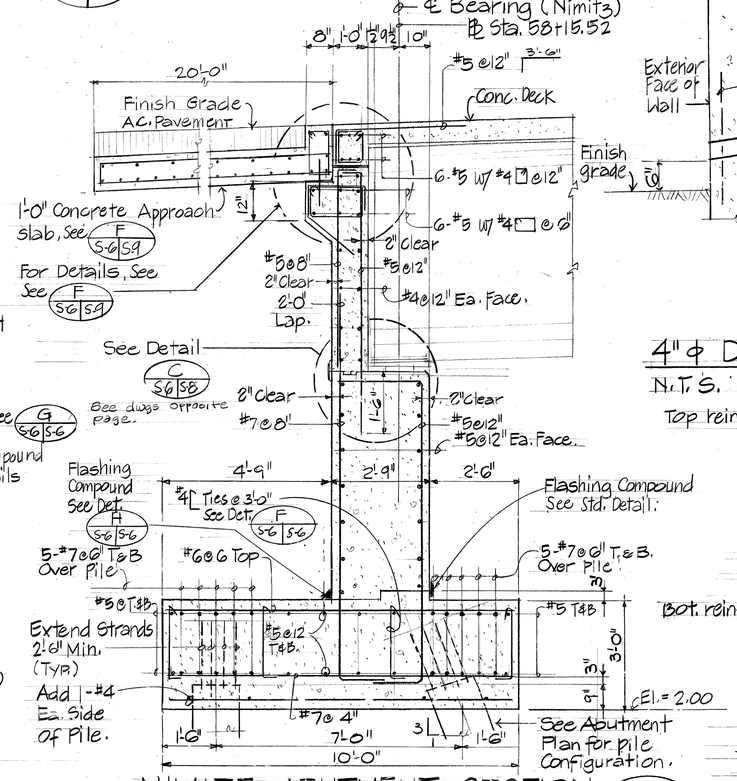

NIMITZ ABUTMENT SECTION (E S-6 | S-6)
Scale: 1/2" = 1'-0"
S-8

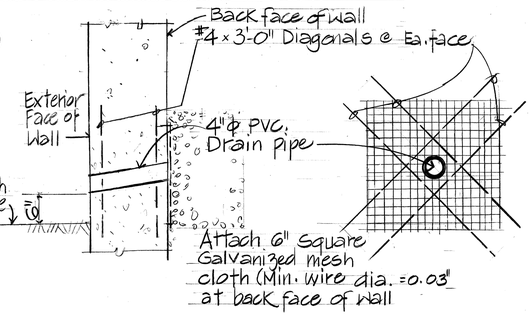

4" ϕ DRAIN PIPE DETAIL (G S-6 | S-6)
N.T.S.
S-7

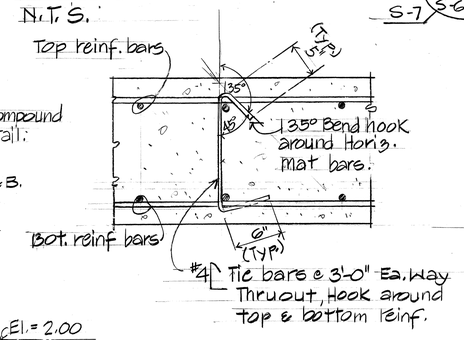

TIE BAR DETAIL (F S-6 | S-6)
N.T.S.
S-10, S-7

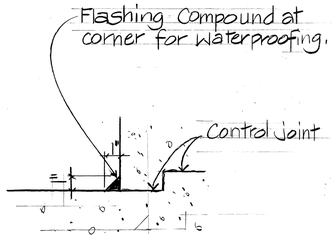

FLASHING COMPOUND AT CORNER DETAIL (H S-6 | S-6)
N.T.S.
S-9

MYRON G. OKUBO REGISTERED PROFESSIONAL ENGINEER No. 4220-S HAWAII, U.S.A.

THIS WORK WAS PREPARED BY ME OR UNDER MY SUPERVISION

Myron Okubo

DATE	REVISION

STATE OF HAWAII
DEPARTMENT OF TRANSPORTATION
HIGHWAYS DIVISION

NIMITZ ABUTMENT

SAND ISLAND ROAD WIDENING
2ND. BRIDGE AND APPROACHES
FEDERAL AID PROJECT NO. F-064-1(2)

SCALE: AS NOTED. DATE: JUN, 1986

SHEET No. S-6 OF 30 SHEETS

ORIGINAL PLAN | NOTE BOOK | No. | SURVEY PLOTTED BY | DRAWN BY | TRACED BY | DESIGNED BY | QUANTITIES BY | CHECKED BY | DATE

"AS-BUILT"

FED. ROAD DIST. NO.	STATE	FED. AID PROJ. NO.	FISCAL YEAR	SHEET NO.	TOTAL SHEETS
HAWAII	HAW.	F-064 (2)	1987	109	151

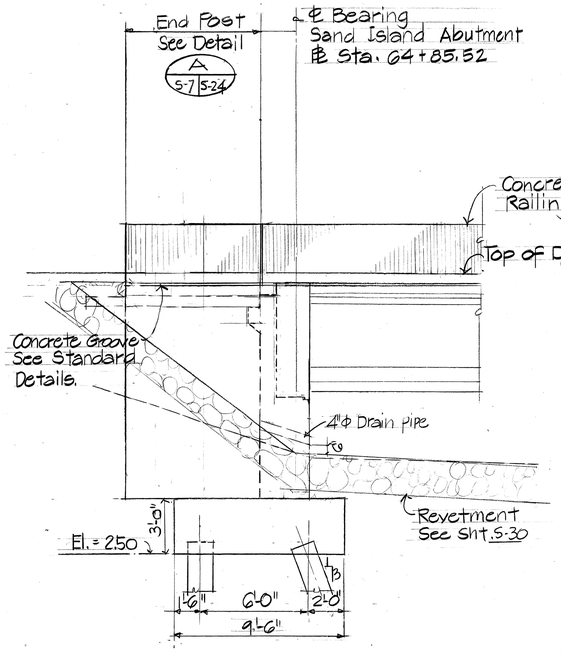

SIDE WALL ELEVATION (A S-7 | S-7)
Scale: 1/4" = 1'-0"

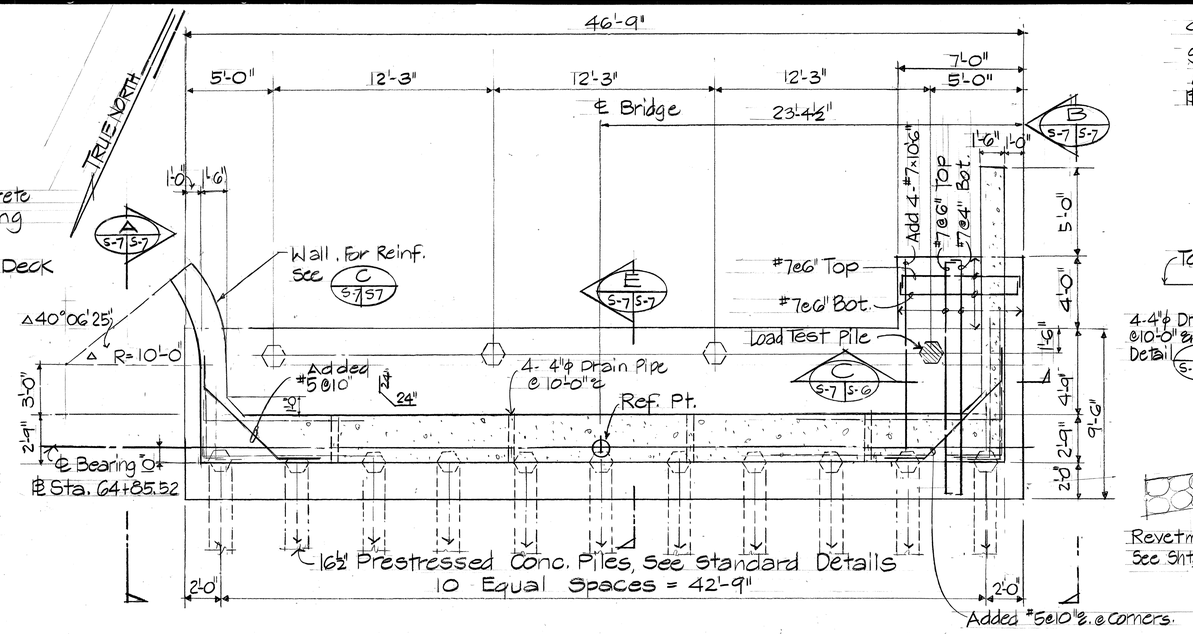

SAND ISLAND ABUTMENT FOUNDATION PLAN
Scale: 1/4" = 1'-0"

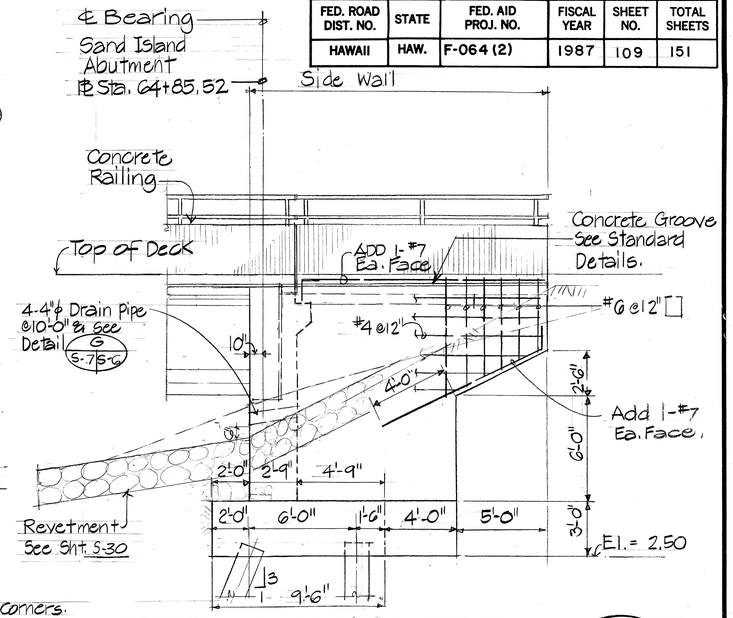

SIDE WALL ELEVATION (B S-7 | S-7)
Scale: 1/4" = 1'-0"

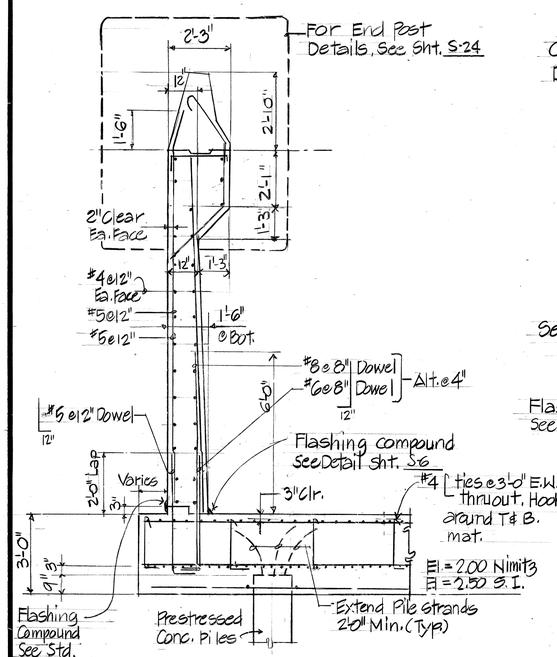

SECTION (C S-7 | S-7)
Scale: 3/8" = 1'-0"
S-6

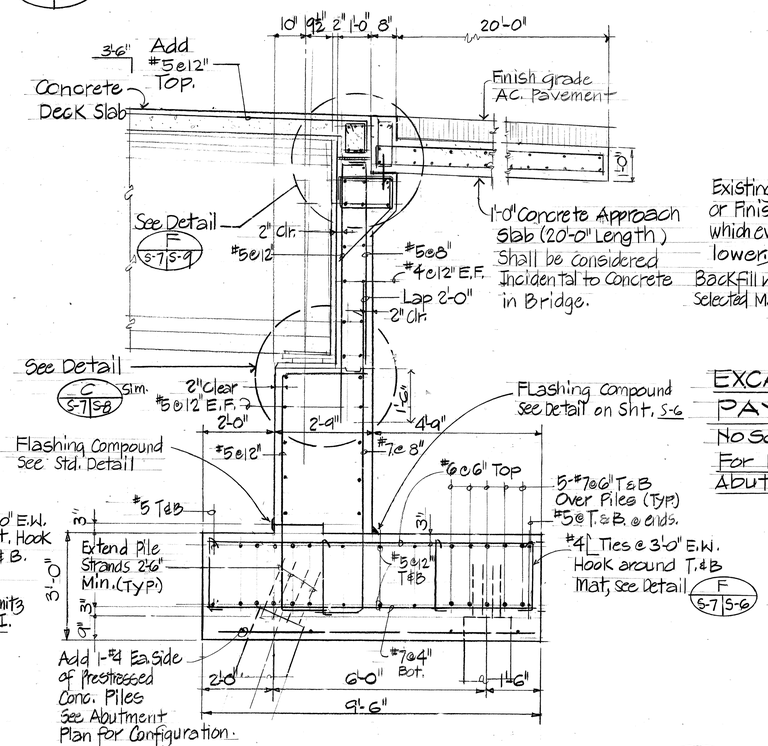

SAND ISLAND ABUTMENT SECTION (E S-7 | S-7)
Scale: 1/2" = 1'-0"

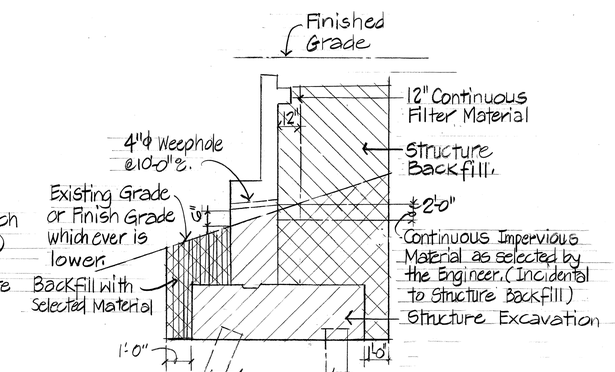

EXCAVATION / BACK FILL
PAY LINE (F S-7 | S-7)
No Scale:
For Nimitz and Sand Island
Abutment

MYRON G. OKUBO
REGISTERED PROFESSIONAL ENGINEER
No. 4320-S
HAWAII, U.S.A.

THIS WORK WAS PREPARED BY
ME OR UNDER MY SUPERVISION

Myron Okubo

ORIGINAL PLAN			
SURVEY PLOTTED BY			DATE
DRAWN BY			"
TRACED BY			"
DESIGNED BY			"
QUANTITIES BY			"
CHECKED BY			"
NOTE BOOK			
No.			

DATE	REVISION

STATE OF HAWAII
DEPARTMENT OF TRANSPORTATION
HIGHWAYS DIVISION

SAND ISLAND ABUTMENT

SAND ISLAND ROAD WIDENING
2 ND. BRIDGE AND APPROACHES
FEDERAL AID PROJECT NO. F-064-1(2)

SCALE: AS NOTED. DATE: JUN, 1986

SHEET No. S-7 OF 30 SHEETS

FED. ROAD DIST. NO.	STATE	FED. AID PROJ. NO.	FISCAL YEAR	SHEET NO.	TOTAL SHEETS
HAWAII	HAW.	F-064-1(2)	1987	110	151

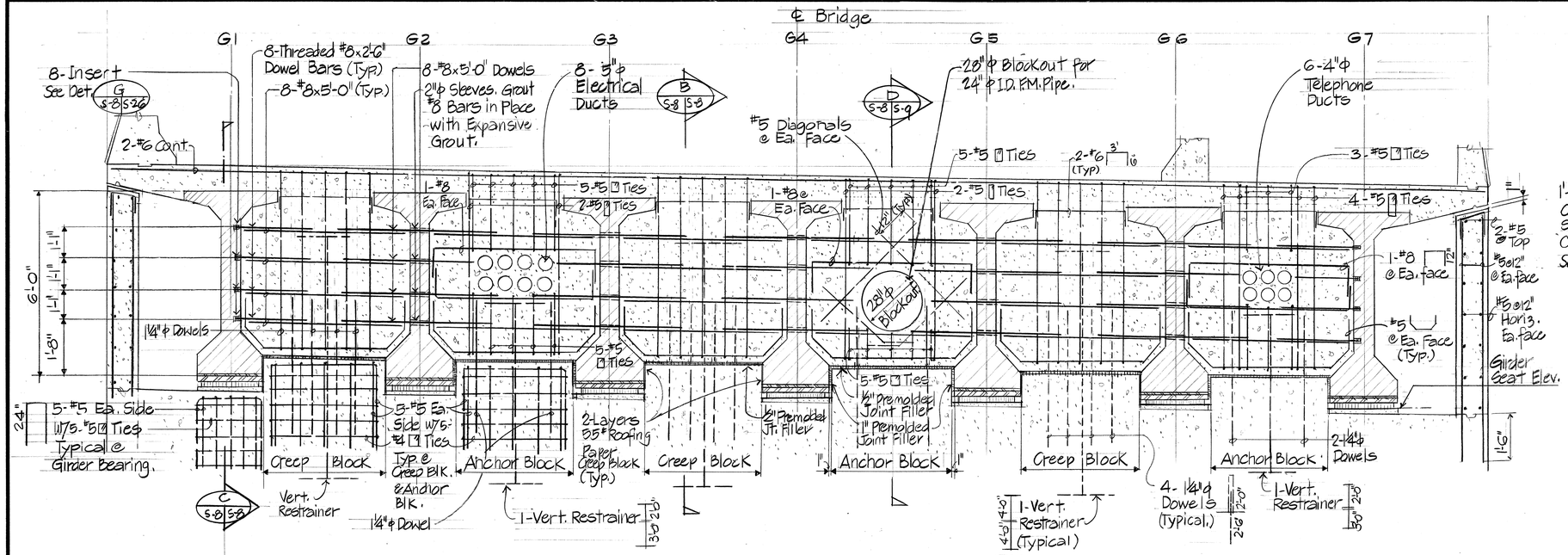

GIRDER BEARING AT ABUTMENT (A S-8 S-8)

Scale: ½" = 1'-0"

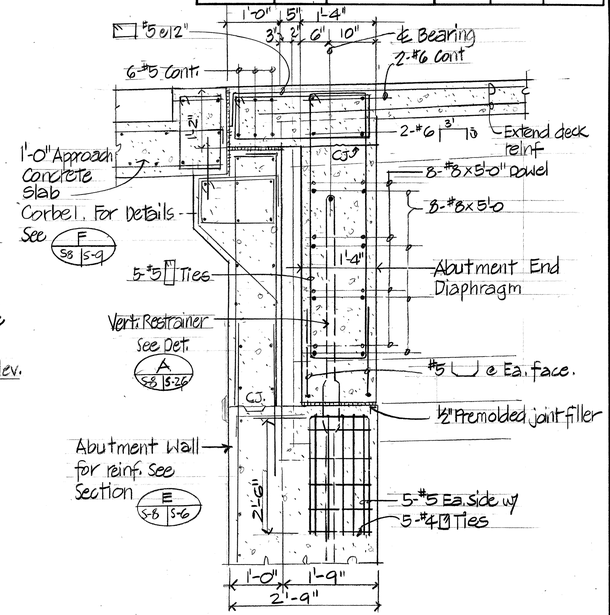

SECTION (B S-8 S-8)

Scale: ¾" = 1'-0"

S-9

(Section Typical for Creep Block & Anchor Block)

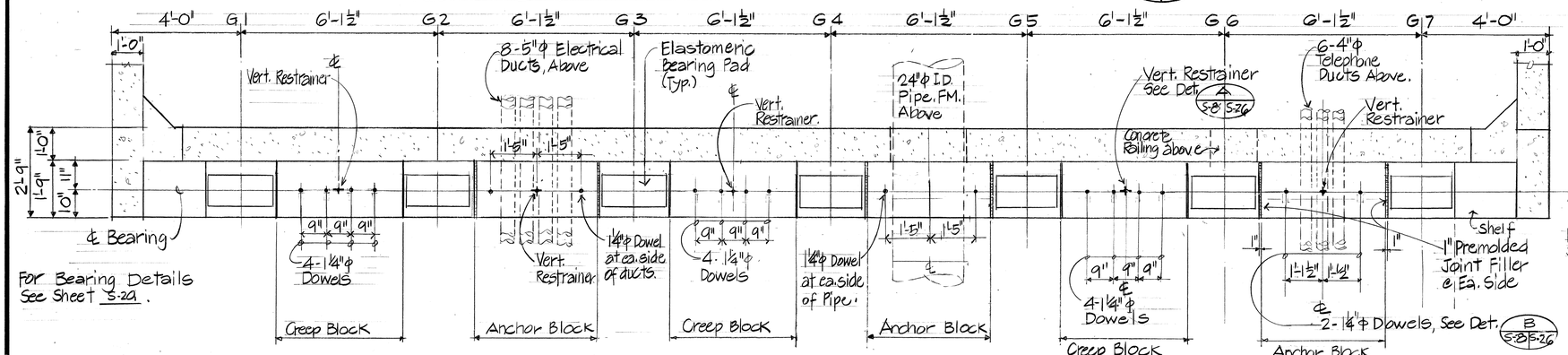

GIRDER BEARING AT ABUTMENT - PLAN

Scale: ½" = 1'-0"

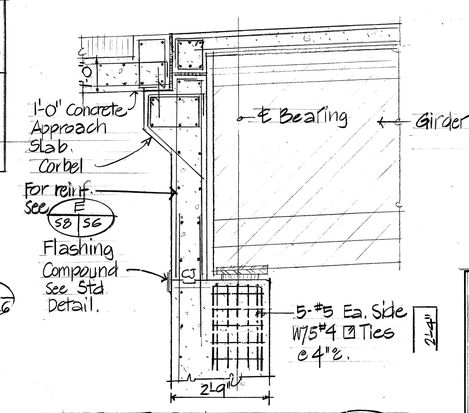

SECTION (C S-8 S-8)

Scale: ½" = 1'-0"

S-6, S-7.

GIRDER SEAT ELEVATION

NIMITZ		SAND ISLAND	
Girder No.	Seat Elevation	Girder No.	Seat Elevation
1-G1	10.82	5-G1	12.04
1-G2	10.70	5-G2	11.92
1-G3	10.57	5-G3	11.79
1-G4	10.45	5-G4	11.67
1-G5	10.33	5-G5	11.55
1-G6	10.20	5-G6	11.42
1-G7	10.08	5-G7	11.30

MYRON G. OKUBO REGISTERED PROFESSIONAL ENGINEER No. 4320-S HAWAII, U.S.A.

THIS WORK WAS PREPARED BY ME OR UNDER MY SUPERVISION.

Myron Okubo

DATE	REVISION

STATE OF HAWAII
DEPARTMENT OF TRANSPORTATION
HIGHWAYS DIVISION

ABUTMENT DETAILS

SAND ISLAND ROAD WIDENING
2ND. BRIDGE AND APPROACHES
FEDERAL AID PROJECT NO. F-064-1(2)

SCALE: AS NOTED. DATE: JUN., 1986

SHEET No. S-8 OF 30 SHEETS

ORIGINAL PLAN | NOTE BOOK No. | SURVEY PLOTTED BY | DRAWN BY | TRACED BY | DESIGNED BY | QUANTITIES BY | CHECKED BY | DATE

FED. ROAD DIST. NO.	STATE	FED. AID PROJ. NO.	FISCAL YEAR	SHEET NO.	TOTAL SHEETS
HAWAII	HAW.	F-064-1 (2)	1987	111	151

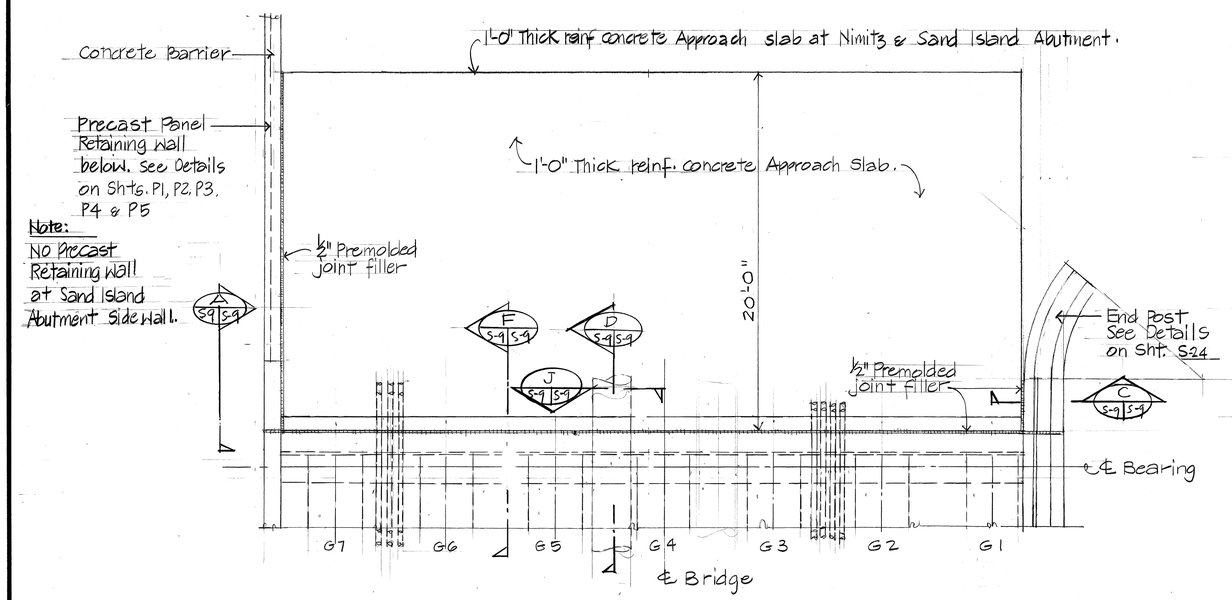

(SAND ISLAND ABUTMENT SIMILAR)

NIMITZ ABUTMENT · PLAN

Scale: ¼" = 1'-0"

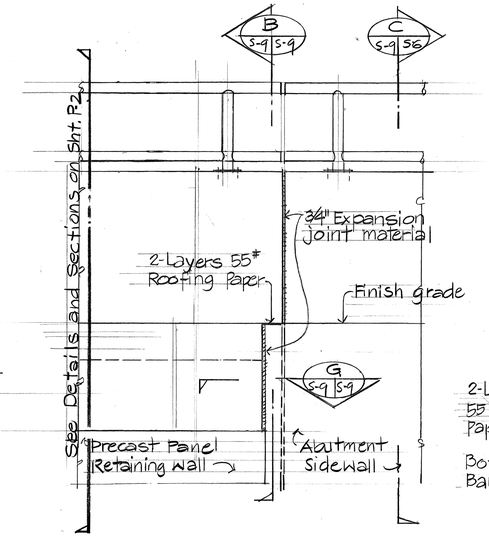

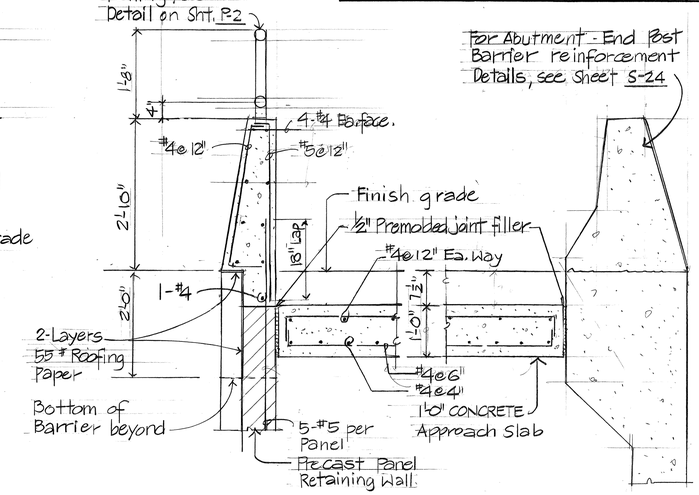

OUTSIDE ELEVATION (A S-9|S-9)

Scale: ¾" = 1'-0"

SECTION (B S-9|S-9)

Scale: ¾" = 1'-0"

SECTION (C S-9|S-9)

Scale: ¾" = 1'-0"

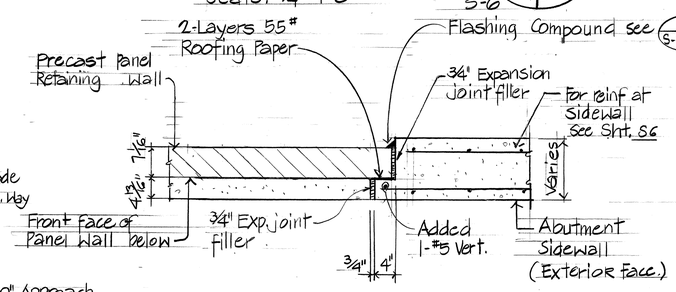

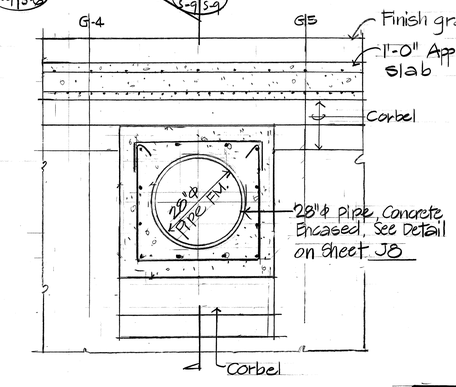

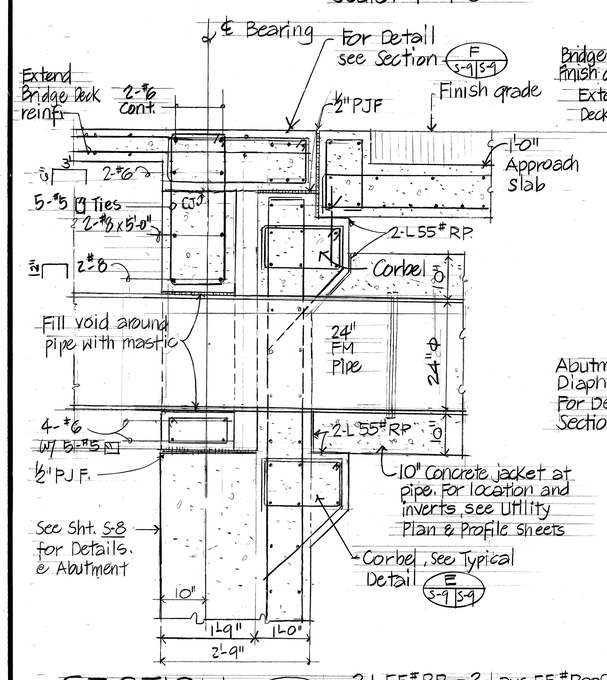

SECTION (D S-9|S-9) S-8

Scale: ¾" = 1'-0"

2-L 55# RP. = 2-Lays 55# Roofing Paper.
PJF. = Premolded Joint Filler.

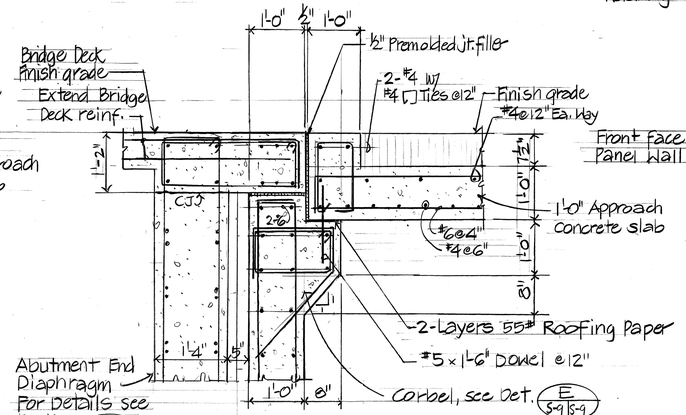

SECTION (F S-9|S-9) S8, S7, S6

Scale: ¾" = 1'-0"

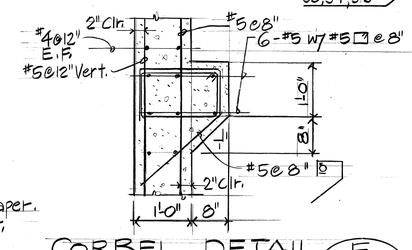

CORBEL DETAIL (E S-9|S-9)

Scale: ¾" = 1'-0"

SECTION (G S-9|S-9)

Scale: ¾" = 1'-0"

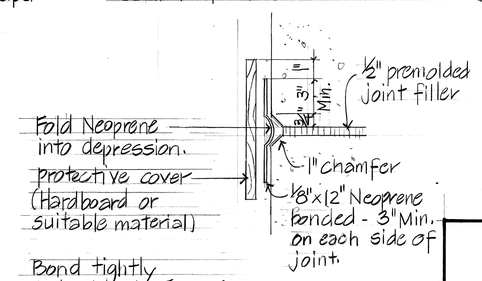

Note: At below grade only.

TYPICAL WATERPROOFING DET. (H S-9|S-9)

N.T.S.

SECTION (J S-9|S-9)

Scale: ½" = 1'-0"

ROSCOE O. FORD REGISTERED PROFESSIONAL ENGINEER No. 3731-S HAWAII, U.S.A.

THIS WORK WAS PREPARED BY ME OR UNDER MY SUPERVISION.

Roscoe O. Ford

ORIGINAL PLAN	SURVEY PLOTTED BY	DATE
	DRAWN BY	
	TRACED BY	
NOTE BOOK	DESIGNED BY	
	QUANTITIES BY	
No.	CHECKED BY	

DATE	REVISION

STATE OF HAWAII
DEPARTMENT OF TRANSPORTATION
HIGHWAYS DIVISION

ABUTMENT DETAILS

SAND ISLAND ROAD WIDENING
2 ND. BRIDGE AND APPROACHES
FEDERAL AID PROJECT NO. F-064-1(2)

SCALE: AS NOTED DATE: JUN, 1986

SHEET No. S-9 OF 30 SHEETS

FED. ROAD DIST. NO.	STATE	FED. AID PROJ. NO.	FISCAL YEAR	SHEET NO.	TOTAL SHEETS
HAWAII	HAW.	F-064-1(2)	1987	112	151

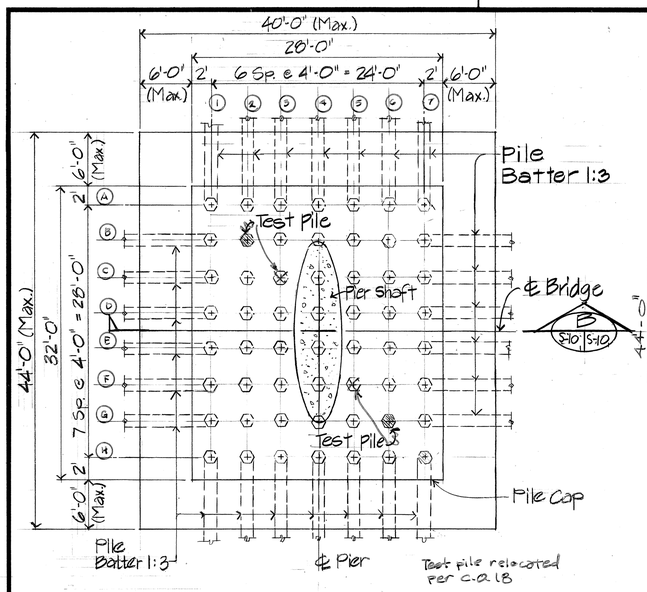

56 - 16½" Octagonal Prestressed Concrete Piles

PLAN

PIER #1 FOOTING (A) S-10 | S-10

Scale: 1/8" = 1'-0"

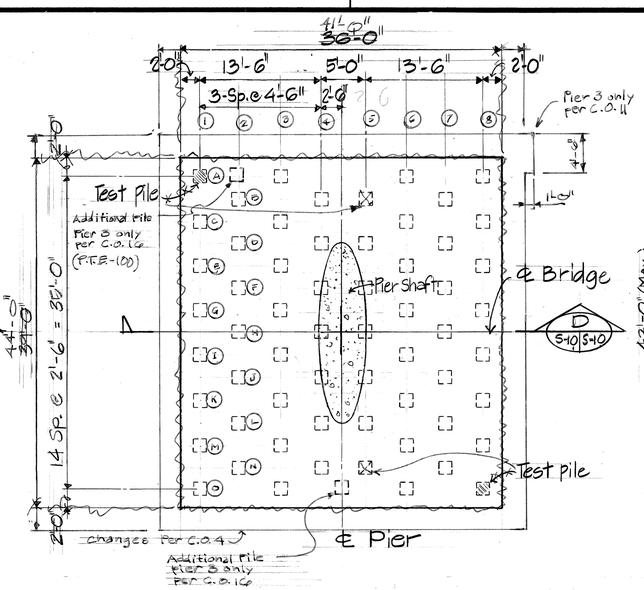

60 - 20" Square Prestressed Concrete Piles.

PLAN

PIERS #2 & #3 FOOTING (C) S-10 | S-10

Scale: 1/8" = 1'-0"

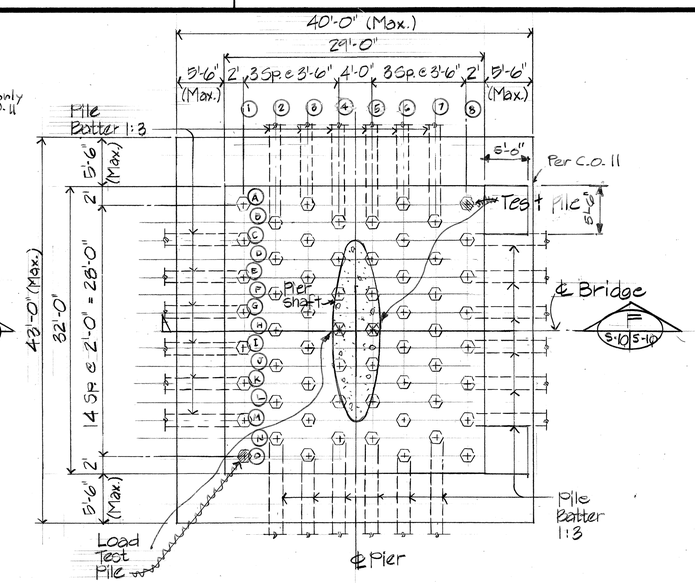

60 - 16½" Octagonal Prestressed Concrete Piles.

PLAN

PIER #4 FOOTING (E) S-10 | S-10

Scale: 1/8" = 1'-0"

Note

The Contractor shall submit shop drawings for False work, Cofferdams or other waterway obstructions required for construction to the Engineer and to the Commander, Fourteenth Coast Guard District for approval. No Bridge construction shall commence prior to approval. All work shall be conducted so that navigation of the waterway is not unreasonably interfered and that the present navigable depth is not impaired. The Contractor shall coordinate and notify the District Commander of any construction that may affect navigation of the waterway. The Contractor shall promptly clear the channel of any obstructions to the satisfaction of the District Commander when the obstruction is no longer required for the contractors operation.

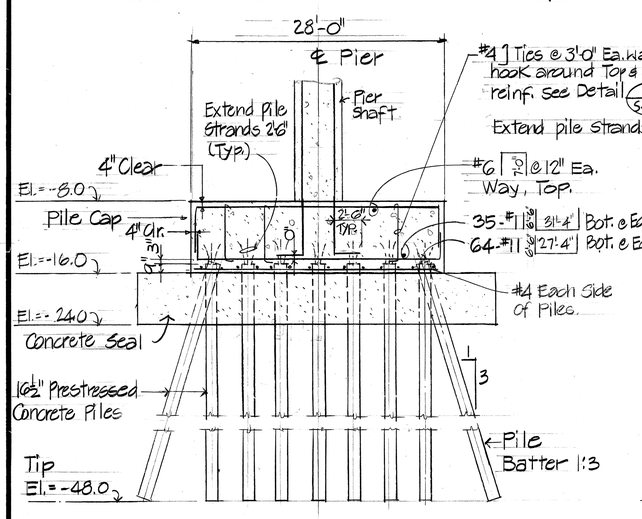

SECTION (B) S-10 | S-10

Scale: 1/8" = 1'-0"

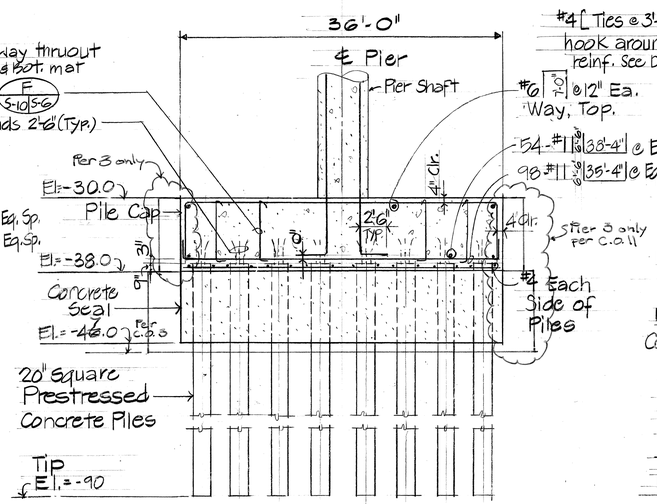

SECTION (D) S-10 | S-10

Scale: 1/8" = 1'-0"

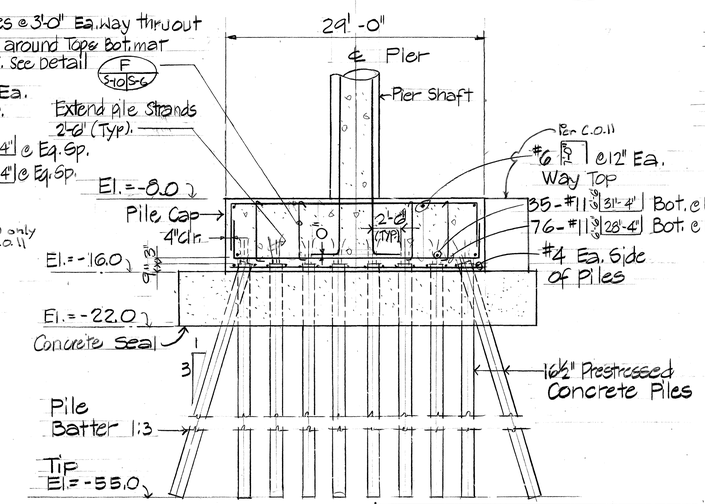

SECTION (F) S-10 | S-10

Scale: 1/8" = 1'-0"

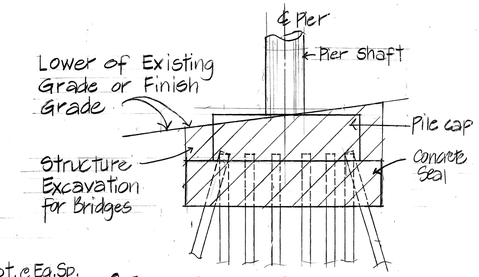

STRUCTURE EXCAVATION DETAIL (G) S-10 | S-10

N.T.S.

For Pile Details, See Sht. S-25 & Std. Details.
For Pier Shaft Reinf. See Sht. S-11.

THIS WORK WAS PREPARED BY ME OR UNDER MY SUPERVISION

Myron Okubo

MYRON G. OKUBO REGISTERED PROFESSIONAL ENGINEER No. 4320-S HAWAII, U.S.A.

DATE	REVISION

STATE OF HAWAII
DEPARTMENT OF TRANSPORTATION
HIGHWAYS DIVISION

PIER FOUNDATIONS

SAND ISLAND ROAD WIDENING
2 ND. BRIDGE AND APPROACHES
FEDERAL AID PROJECT NO. F-064-1(2)

SCALE: AS NOTED. DATE: JUN., 1986

SHEET No. S-10 OF 30 SHEETS

ORIGINAL PLAN | SURVEY PLOTTED BY | DRAWN BY | TRACED BY | DESIGNED BY | QUANTITIES BY | CHECKED BY | DATE | NOTE BOOK | No.

"AS-BUILT"

FED. ROAD DIST. NO.	STATE	FED. AID PROJ. NO.	FISCAL YEAR	SHEET NO.	TOTAL SHEETS
HAWAII	HAW.	F-064-1(2)	1987	113	151

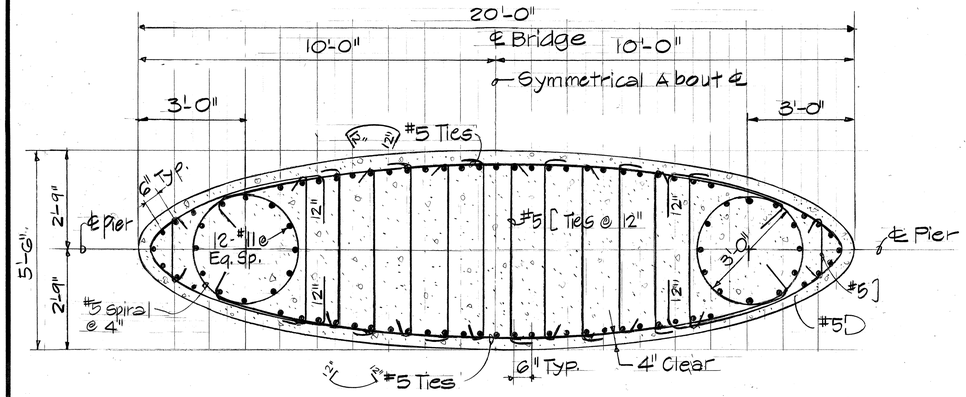

Total 88-#11 Vert. Full Height

SECTION A (S-11 | S-11)

Scale: 1/2" = 1'-0"

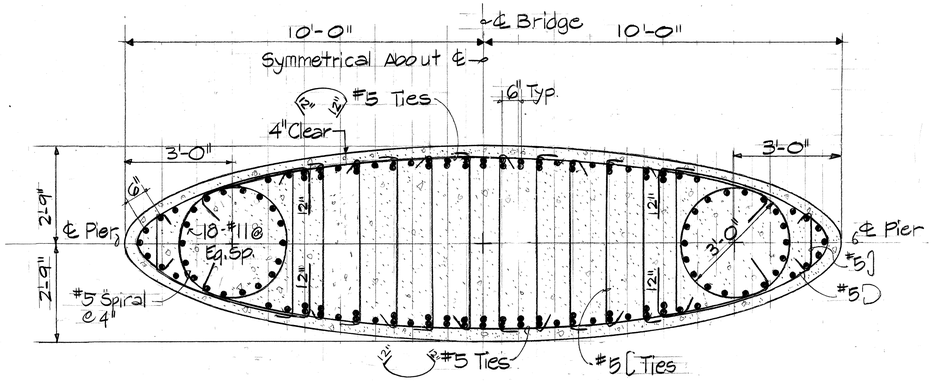

Total 130-#11 Vert.

SECTION B (S-11 | S-11)

Scale: 1/2" = 1'-0"

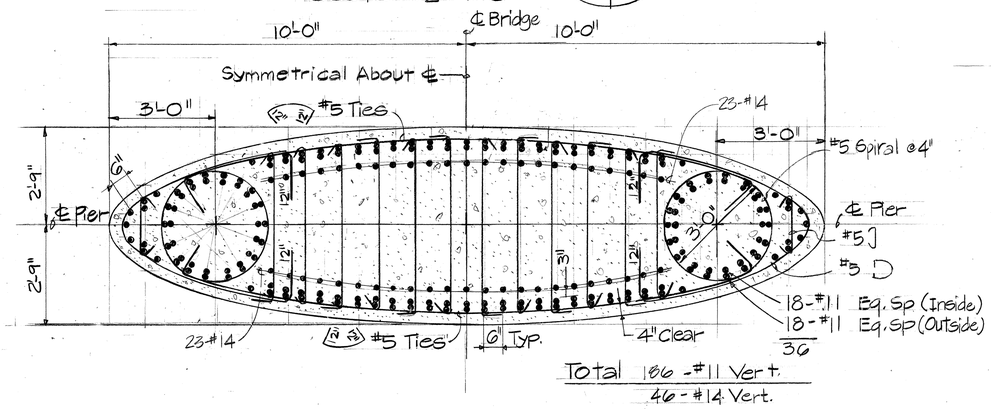

Total 186-#11 Vert.
46-#14 Vert.

SECTION C (S-11 | S-11)

Scale: 1/2" = 1'-0"

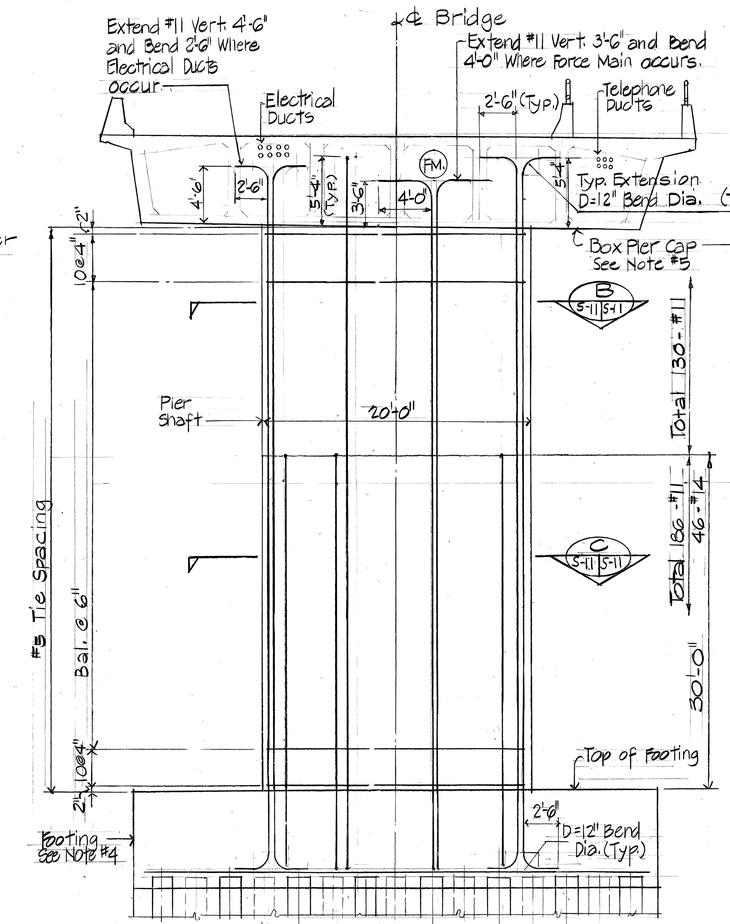

PIERS #2 & #3 (D | S-11 | S-11)

Scale: 3/16" = 1'-0"

Notes:

1. All Pier vertical reinf. shall conform to ASTM A615 Grade 60. Pier ties shall conform to ASTM A615 Grade 40.
2. Pier Cross Section shall be in the form of an Ellipse, see Pier shape det. (G | S-11 | S-11)
3. Concrete for Pier Shaft shall have f'c = 4,500 p.s.i.
4. Pier Footing: for Reinf. and Details, see sheet S-10.
5. Box Pier Cap: for Reinf. and Details, see sheets S-11, S-12, S-13, S-14 & S-15.

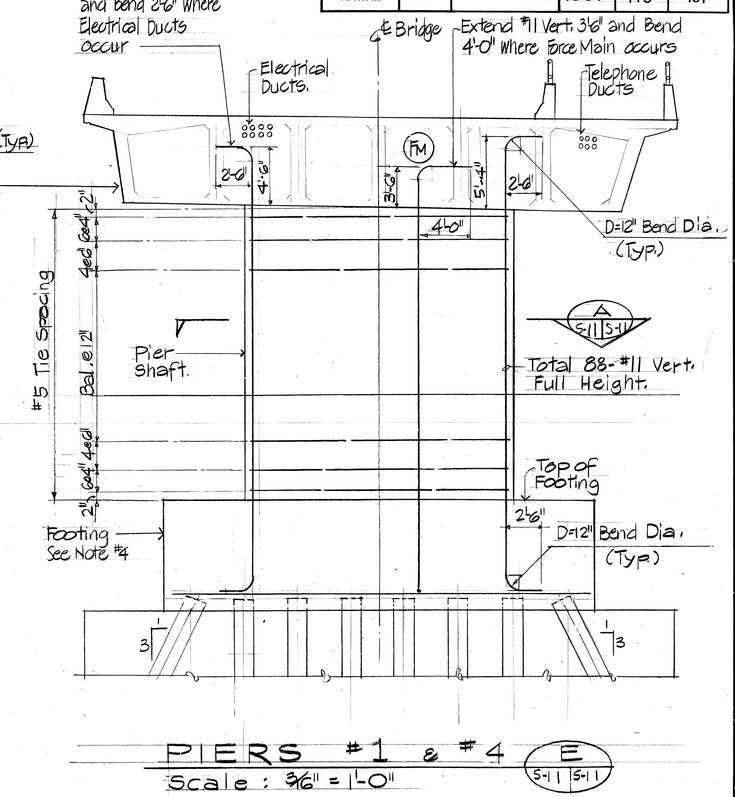

PIERS #1 & #4 (E | S-11 | S-11)

Scale: 3/16" = 1'-0"

All Splices to develop not less than 90% of the specified Ultimate Tensile Strength of the Reinforcing Steel. No Lap Splices for #11 Vert. Reinf. will be allowed

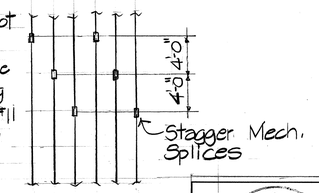

PIER VERT. BARS SPLICE DETAIL (F | S-11 | S-11)

N.T.S.

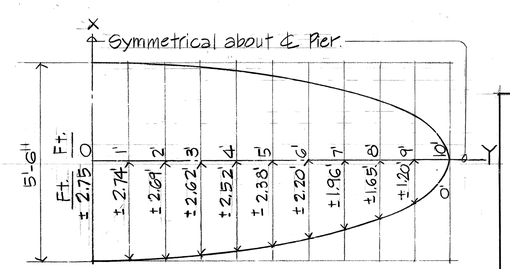

PIER SHAPE DETAIL (G | S-11 | S-11)

N.T.S.

MYRON G. OKUDO REGISTERED PROFESSIONAL ENGINEER No. 4320-S HAWAII, U.S.A.

THIS WORK WAS PREPARED BY ME OR UNDER MY SUPERVISION

Myron Okudo

STATE OF HAWAII
DEPARTMENT OF TRANSPORTATION
HIGHWAYS DIVISION

PIERS - SECTIONS AND DETAILS

SAND ISLAND ROAD WIDENING
2ND. BRIDGE AND APPROACHES
FEDERAL AID PROJECT NO. F-064-1(2)

SCALE: AS NOTED DATE: JUN, 1986

SHEET No. S-11 OF 30 SHEETS

DATE	REVISION

ORIGINAL PLAN | SURVEY PLOTTED BY | DRAWN BY | TRACED BY | DESIGNED BY | QUANTITIES BY | CHECKED BY | DATE | NOTE BOOK | No.

FED. ROAD DIST. NO.	STATE	FED. AID PROJ. NO.	FISCAL YEAR	SHEET NO.	TOTAL SHEETS
HAWAII	HAW.	F-064-1(2)	1987	114	151

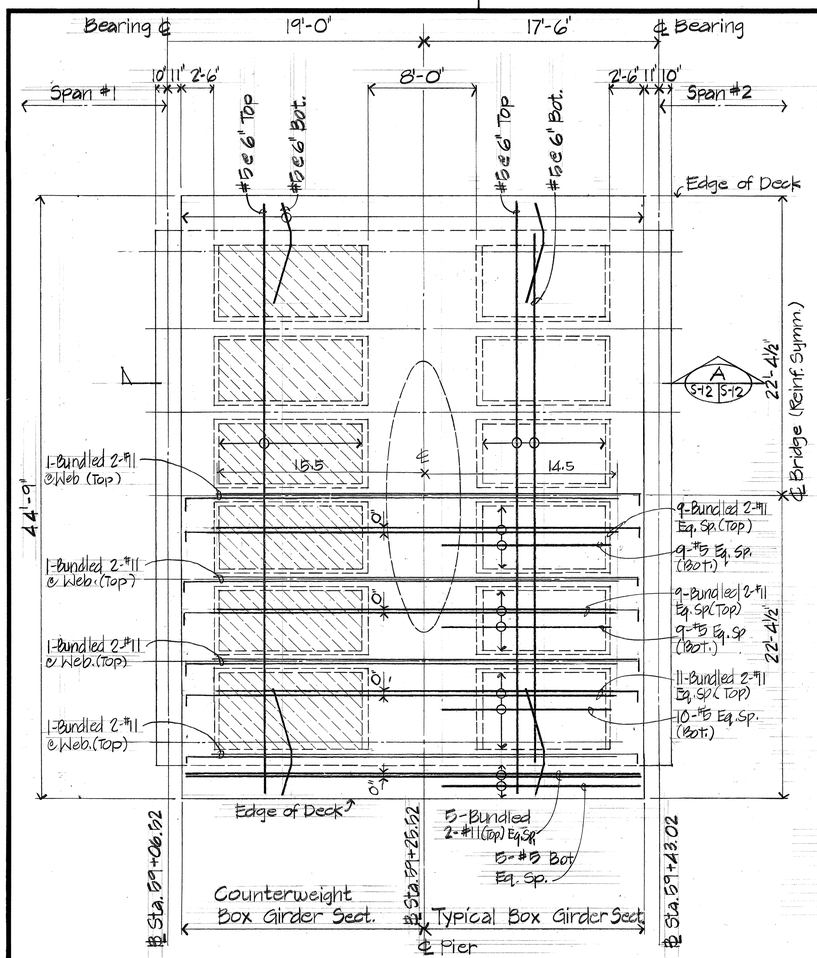

PIER #1 - PLAN

Scale: 3/16" = 1'-0"

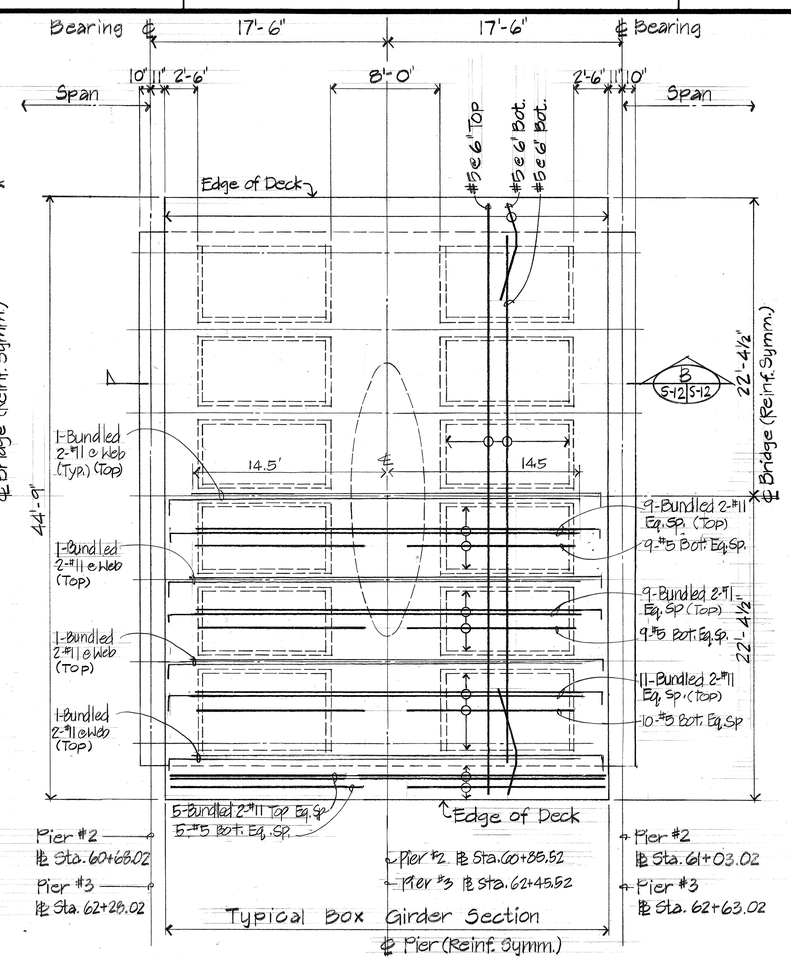

PIERS #2 & #3 - PLAN

Scale: 3/16" = 1'-0"

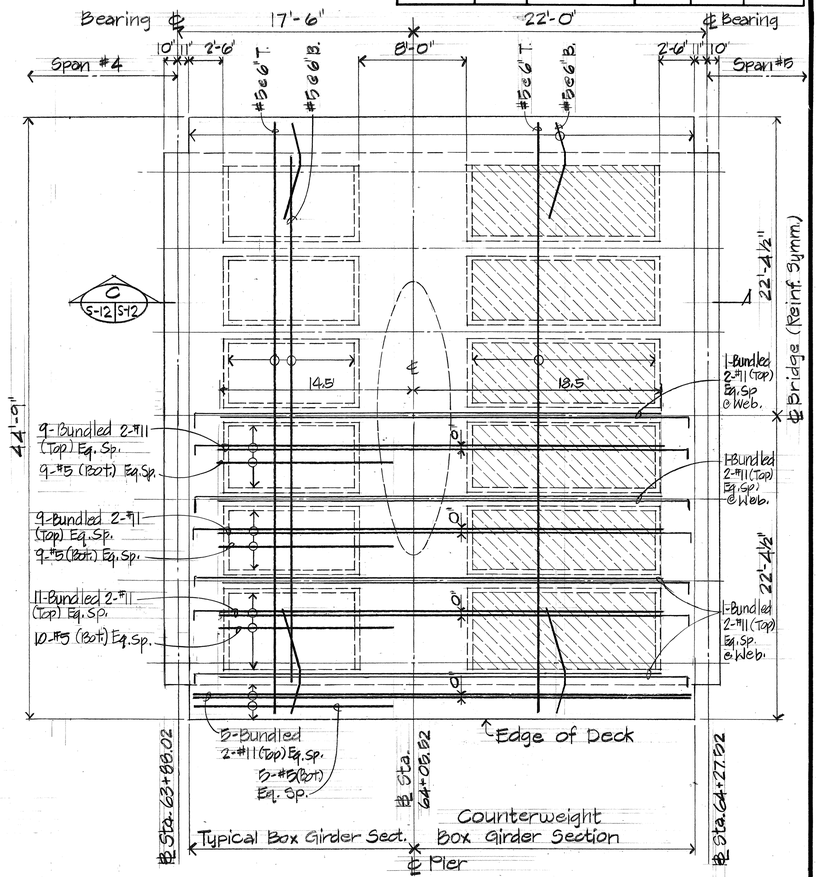

PIER #4 - PLAN

Scale: 3/16" = 1'-0"

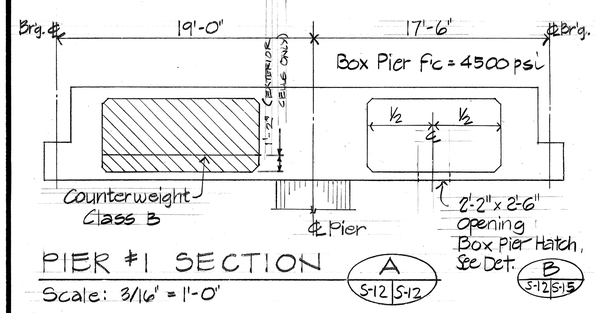

PIER #1 SECTION A S-12 S-12

Scale: 3/16" = 1'-0"

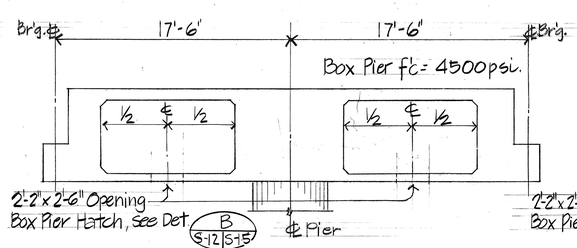

PIERS #2 & #3 SECTION B S-12 S-12

Scale: 3/16" = 1'-0"

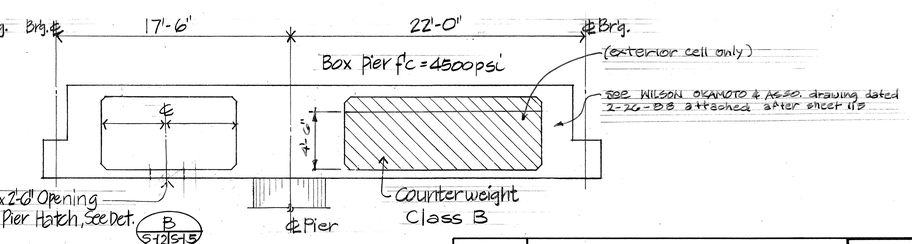

PIER #4 SECTION C S-12 S-12

Scale: 3/16" = 1'-0"

Cross Hatching Denotes Limits of Concrete Counterweight. Concrete for Counterweight shall be Class B. Concrete for Box Pier shall have f'c = 4500 psi.

Note: Box Pier Hatch located only where 24"ϕ FM. Pipe goes thru Box Piers. All reinforcement for Box Pier shall be ASTM A615 Grade 60.

MYRON G. OKUMO REGISTERED PROFESSIONAL ENGINEER No. 4320-S HAWAII, U.S.A.

THIS WORK WAS PREPARED BY ME OR UNDER MY SUPERVISION

Myron Okumo

DATE	REVISION

STATE OF HAWAII
DEPARTMENT OF TRANSPORTATION
HIGHWAYS DIVISION

BOX PIER PLAN & SECTIONS

SAND ISLAND ROAD WIDENING
2 ND. BRIDGE AND APPROACHES
FEDERAL AID PROJECT NO. F-064-1(2)

SCALE: AS NOTED DATE: JUN, 1986

SHEET No. S-12 OF 30 SHEETS

ORIGINAL PLAN | SURVEY PLOTTED BY | DRAWN BY | TRACED BY | DESIGNED BY | QUANTITIES BY | CHECKED BY | DATE | NOTE BOOK | No.

"AS-BUILT"

FED. ROAD DIST. NO.	STATE	FED. AID PROJ. NO.	FISCAL YEAR	SHEET NO.	TOTAL SHEETS
HAWAII	HAW.	F-064-1(2)	1987	115	151

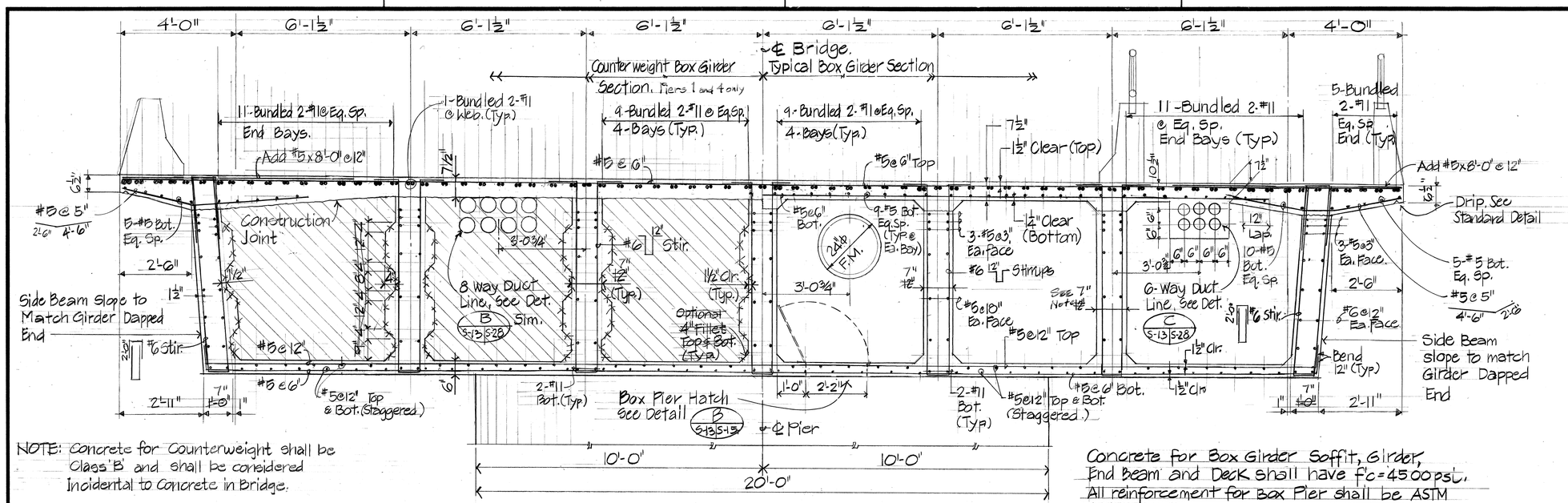

NOTE: Concrete for Counterweight shall be Class 'B' and shall be considered Incidental to Concrete in Bridge.

Concrete for Box Girder Soffit, Girder, End Beam and Deck shall have f'c = 4500 psi. All reinforcement for Box Pier shall be ASTM A615 Grade 60.

Note: As-built girders not as shown. See Sht. C.O.121.

SECTION A
S-13 | S-13
Scale: 1/2" = 1'-0"

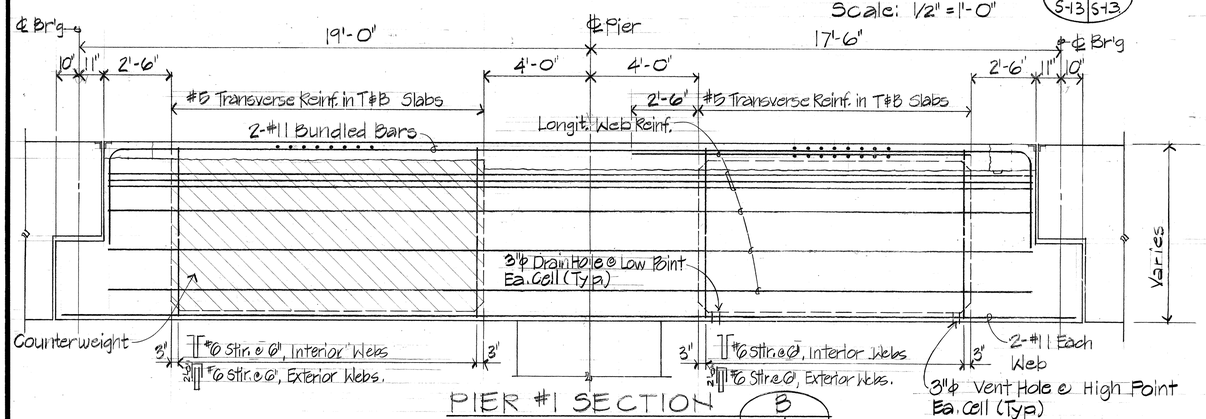

PIER #1 SECTION B
S-13 | S-13
Scale: 3/8" = 1'-0"

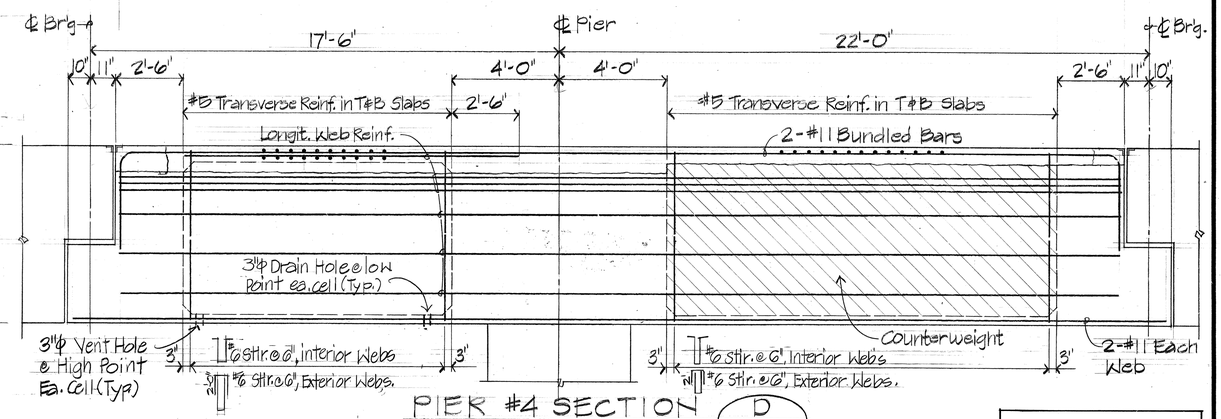

PIER #4 SECTION D
S-13 | S-13
Scale: 3/8" = 1'-0"

Note:
Drain and Vent Holes shall be of Non-Corrosive Material with ½" Drip all around.
See Standard Details.

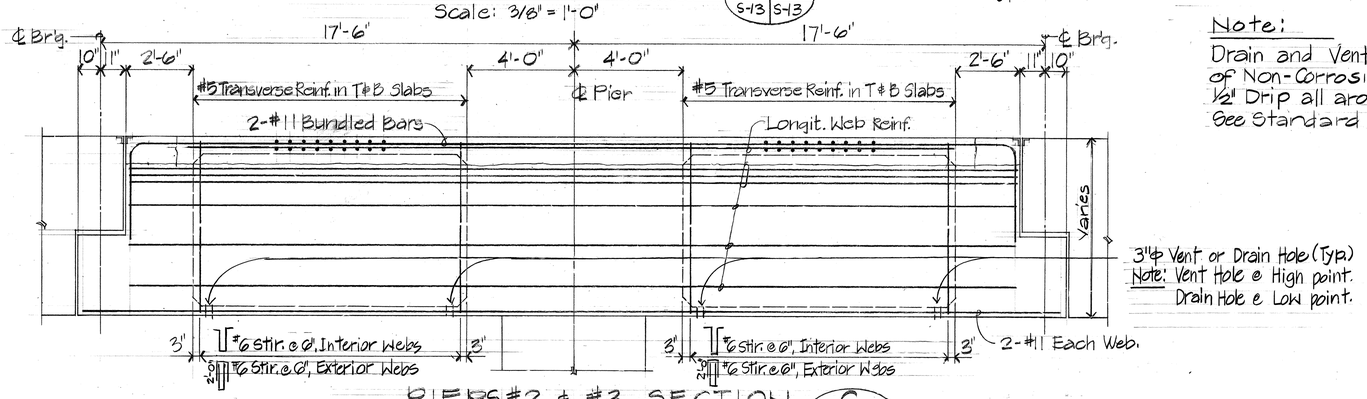

PIERS #2 & #3 SECTION C
S-13 | S-13
Scale: 3/8" = 1'-0"

MYRON G. OKUBO REGISTERED PROFESSIONAL ENGINEER No. 4290-S HAWAII, U.S.A.

THIS WORK WAS PREPARED BY ME OR UNDER MY SUPERVISION

Myron Okubo

DATE	REVISION

STATE OF HAWAII
DEPARTMENT OF TRANSPORTATION
HIGHWAYS DIVISION

BOX PIER DETAILS

SAND ISLAND ROAD WIDENING
2ND BRIDGE AND APPROACHES
FEDERAL AID PROJECT NO. F-064-1(2)

SCALE: AS NOTED DATE: JUN, 1986

SHEET No. S-13 OF 30 SHEETS

ORIGINAL PLAN | NOTE BOOK No. | SURVEY PLOTTED BY | DRAWN BY | TRACED BY | DESIGNED BY | QUANTITIES BY | CHECKED BY | DATE

"AS-BUILT"

FED. ROAD DIST. NO.	STATE	FED. AID PROJ. NO.	FISCAL YEAR	SHEET NO.	TOTAL SHEETS
HAWAII	HAW.	F-064-1(2)	1987	116	151

Notes:
1. All reinforcement in Box Pier shall be ASTM A615 Grade 60.

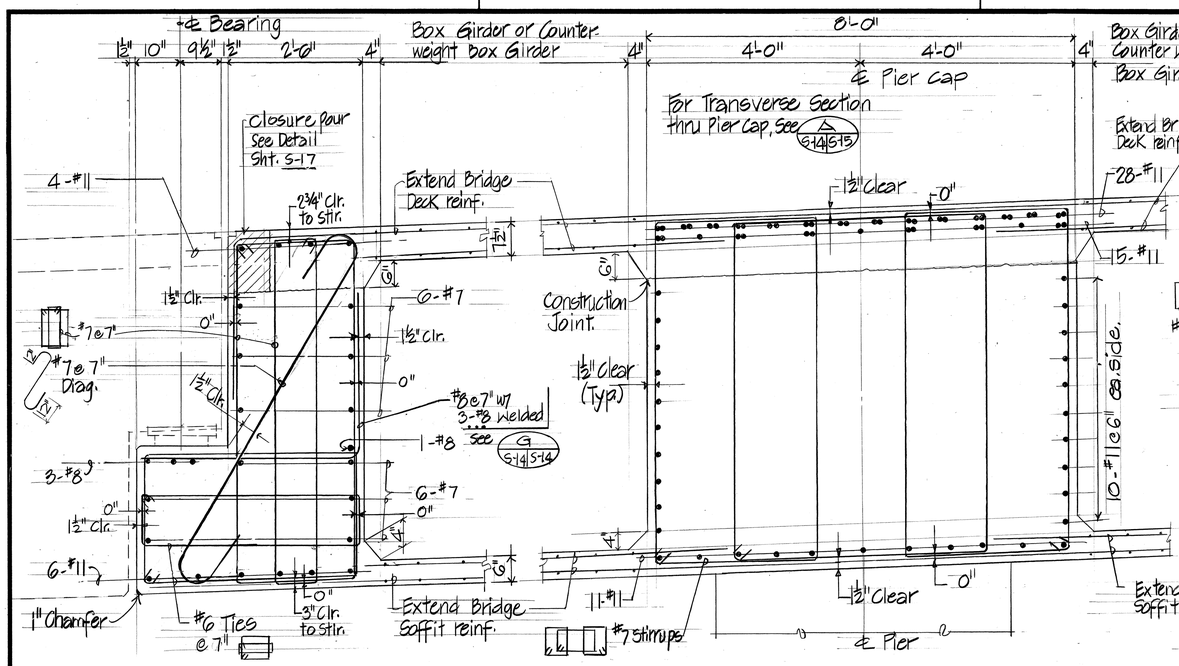

PIER END BEAM - SECTION A
Scale: ¾" = 1'-0"
S-15 S-14 S-14

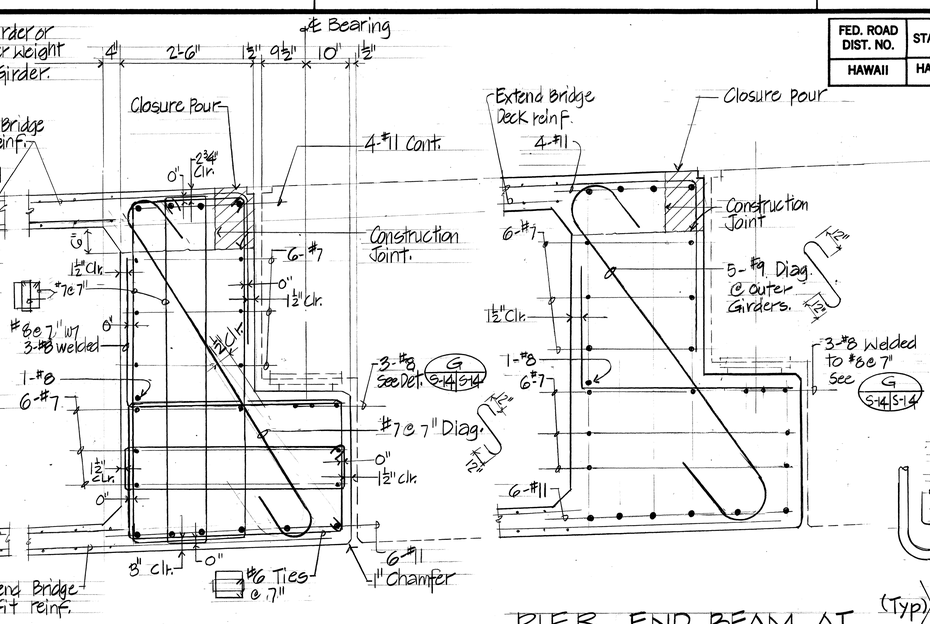

PIER END BEAM - SECTION C
Scale: ¾" = 1'-0"
S-15 S-14

PIER END BEAM AT OUTER GIRDER SECTION J
Scale: ¾" = 1'-0"
S-15 S-14

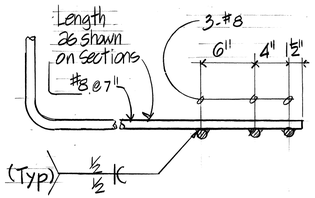

DETAIL G
N.T.S.
S-14 S-14

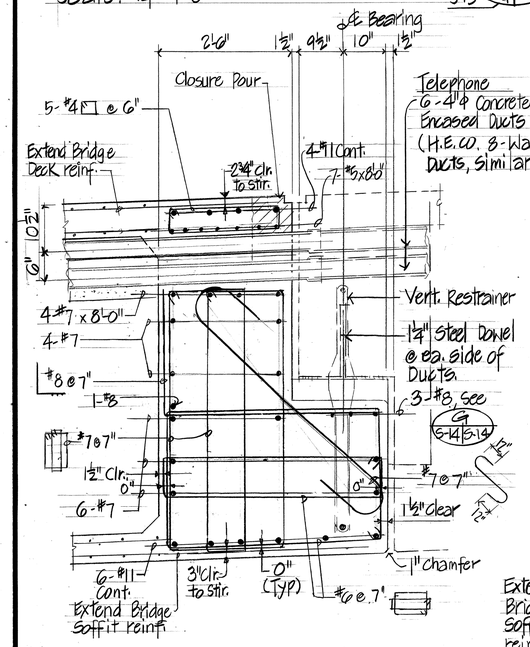

CONDITION AT 6-WAY DUCT - SECTION D
Scale: ¾" = 1'-0"
S-15 S-14
S-28
Electrical 8-Way Duct Section Similar.

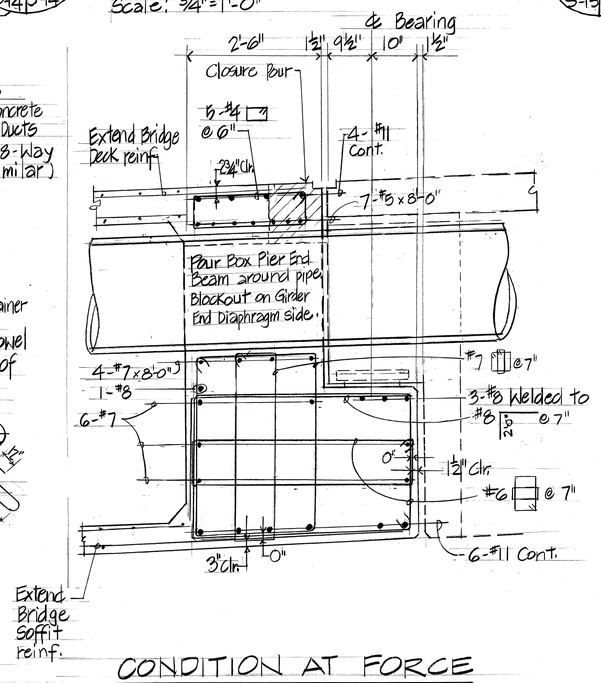

CONDITION AT FORCE MAIN SECTION E
Scale: ¾" = 1'-0"
S-15 S-14

For locations of Vert. Restrainer and 1¼" Dowels, see plan Sht S-16 and for Details see Sht. S-26.

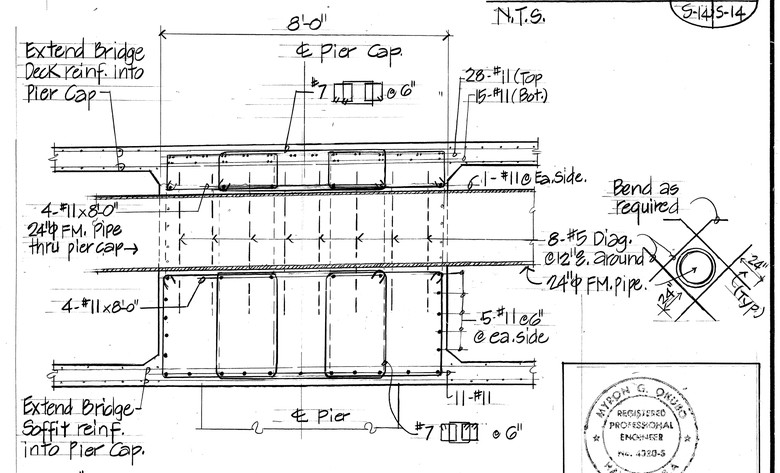

24" ϕ F.M. PIPE THRU PIER CAP - SECTION H
Scale: ½" = 1'-0"
S-15 S-14

MYRON C. OKUBO REGISTERED PROFESSIONAL ENGINEER No. 4320-S HAWAII, U.S.A.

THIS WORK WAS PREPARED BY ME OR UNDER MY SUPERVISION.
Myron Okubo

DATE	REVISION

STATE OF HAWAII
DEPARTMENT OF TRANSPORTATION
HIGHWAYS DIVISION

BOX PIER DETAILS

SAND ISLAND ROAD WIDENING
2ND. BRIDGE AND APPROACHES
FEDERAL AID PROJECT NO. F-064-1(2)

SCALE: AS NOTED. DATE: JUN, 1986

SHEET NO. S-14 OF 30 SHEETS

ORIGINAL PLAN | SURVEY PLOTTED BY | DRAWN BY | TRACED BY | DESIGNED BY | QUANTITIES BY | CHECKED BY | DATE | NOTE BOOK | No.

FED. ROAD DIST. NO.	STATE	FED. AID PROJ. NO.	FISCAL YEAR	SHEET NO.	TOTAL SHEETS
HAWAII	HAW.	F-064-1(2)	1987	117	151

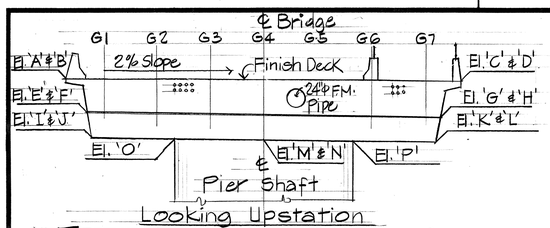

TRANSVERSE ELEVATION

N.T.S.

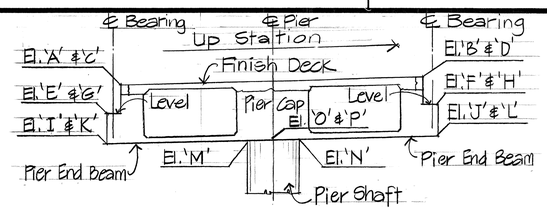

LONGITUDINAL ELEVATION

N.T.S.

ELEVATIONS

PIER	A	B	C	D	E	F	G	H	I	J	K	L	M	N	O	P
1	20.92	21.83	20.02	20.93	16.77	17.73	15.99	16.95	13.97	14.98	13.19	14.20	14.03	14.17	14.30	13.90
2	24.06	24.35	23.16	23.45	19.93	20.35	19.15	19.57	17.15	17.48	16.37	16.70	16.89	16.94	17.11	16.71
3	24.37	24.08	23.47	23.18	20.36	19.95	19.58	19.17	17.49	17.17	16.71	16.39	16.95	16.90	17.13	16.73
4	21.88	20.89	20.98	19.99	17.78	16.79	17.00	16.01	15.02	13.94	14.25	13.16	14.22	14.06	14.35	13.95

Notes:

1. All reinforcement in Pier End Beam shall be ASTM A615, GRADE 60.
2. For 24"φ Diagonals see Sections on Sheet S-14

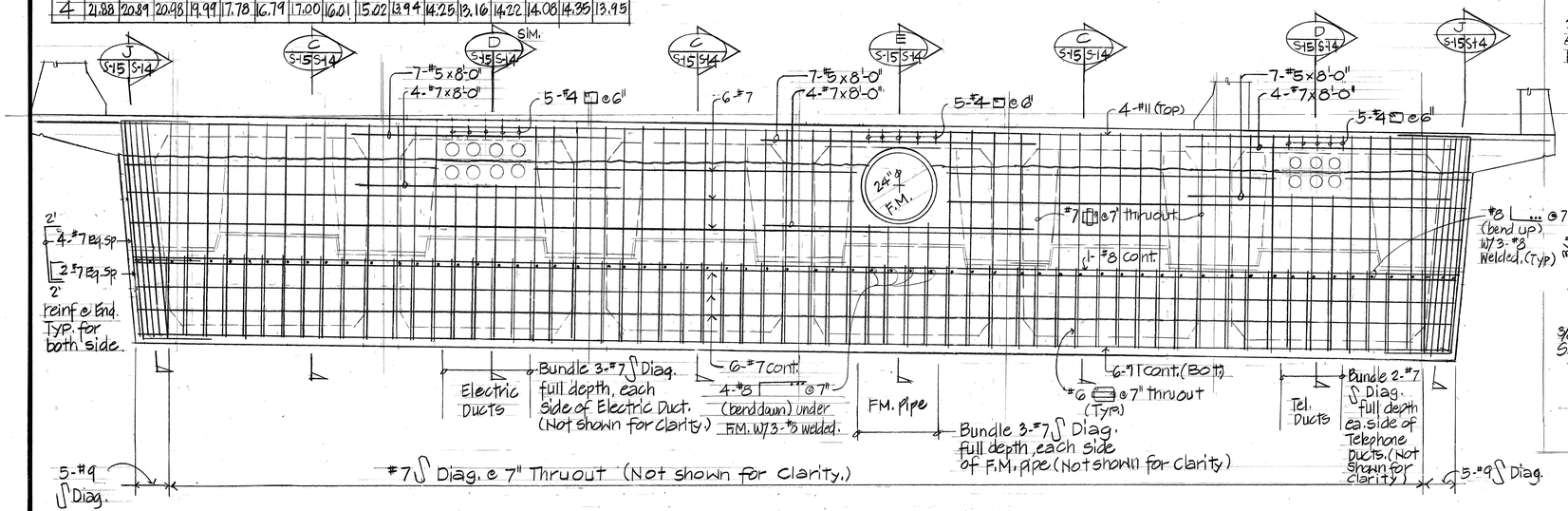

TRANSVERSE SECTION THRU PIER END BEAM

Scale: 1/2" = 1'-0"

E S-15 S-15

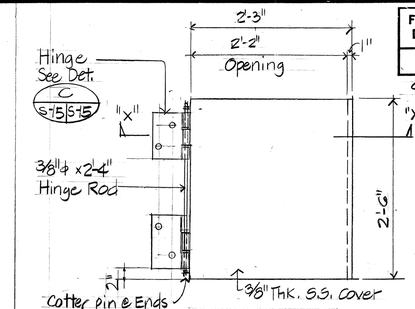

TOP - COVER

Scale: 1" = 1'-0"

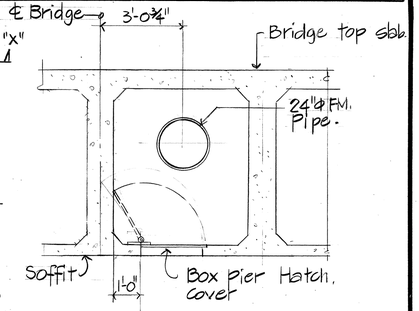

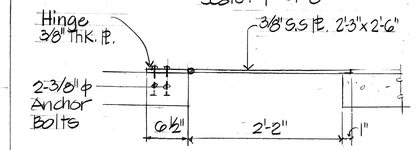

SECTION "X-X"

Scale: 1" = 1'-0"

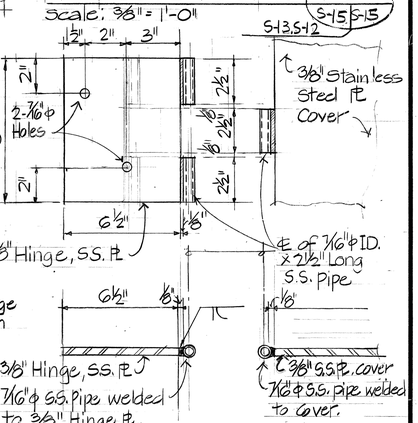

BOX PIER HATCH WITH COVER DETAIL B

S-15 S-15

Scale: 3/8" = 1'-0"

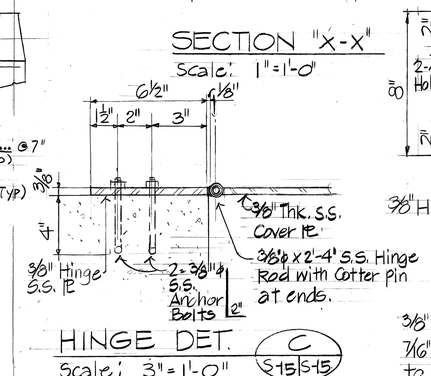

HINGE DET.

Scale: 3" = 1'-0"

C S-15 S-15

HINGE DETAIL

Scale: 3" = 1'-0"

D S-15 S-15

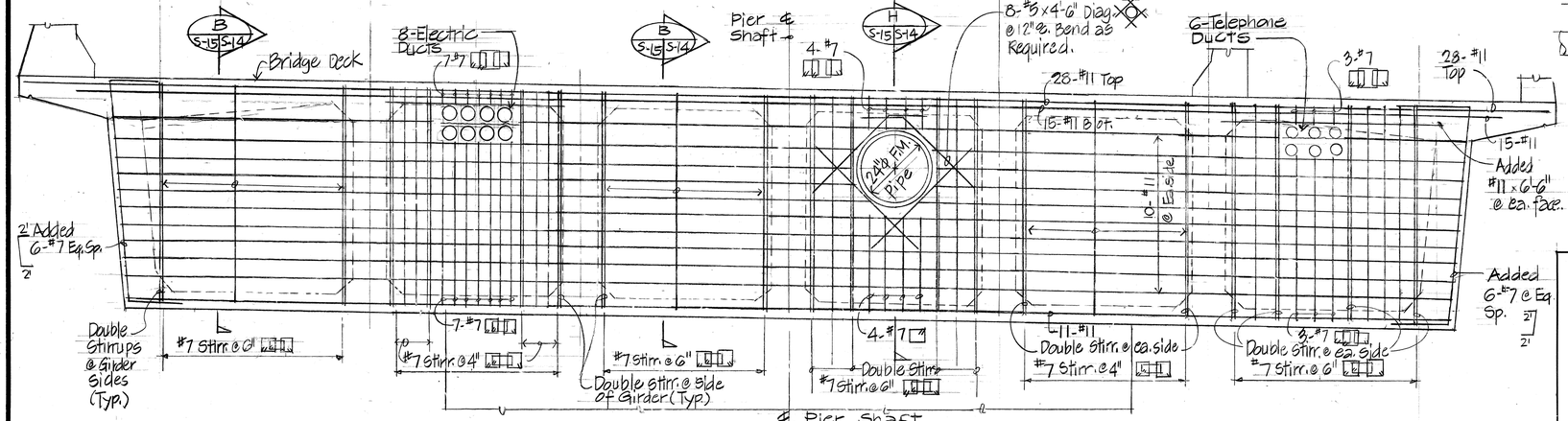

TRANSVERSE SECTION THRU PIER CAP

Scale: 1/2" = 1'-0"

S-14 A S-15 S-15

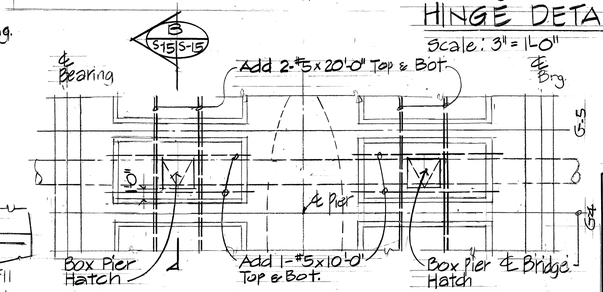

HATCH LOCATION - PLAN

Scale: 3/16" = 1'-0"

MILTON G. OKUDA REGISTERED PROFESSIONAL ENGINEER No. 4320-S HAWAII, U.S.A.

THIS WORK WAS PREPARED BY ME OR UNDER MY SUPERVISION

Myron Okuda

DATE	REVISION

STATE OF HAWAII
DEPARTMENT OF TRANSPORTATION
HIGHWAYS DIVISION

BOX PIER DETAILS

SAND ISLAND ROAD WIDENING
2ND. BRIDGE AND APPROACHES
FEDERAL AID PROJECT NO. F-064-1(2)

SCALE: AS NOTED DATE: JUN, 1986

SHEET No. S-15 OF 30 SHEETS

ORIGINAL PLAN | SURVEY PLOTTED BY | DRAWN BY | TRACED BY | DESIGNED BY | QUANTITIES BY | CHECKED BY | DATE | NOTE BOOK | No.

FED. ROAD DIST. NO.	STATE	FED. AID PROJ. NO.	FISCAL YEAR	SHEET NO.	TOTAL SHEETS
HAWAII	HAW.	F-064-1(2)	1987	118	151

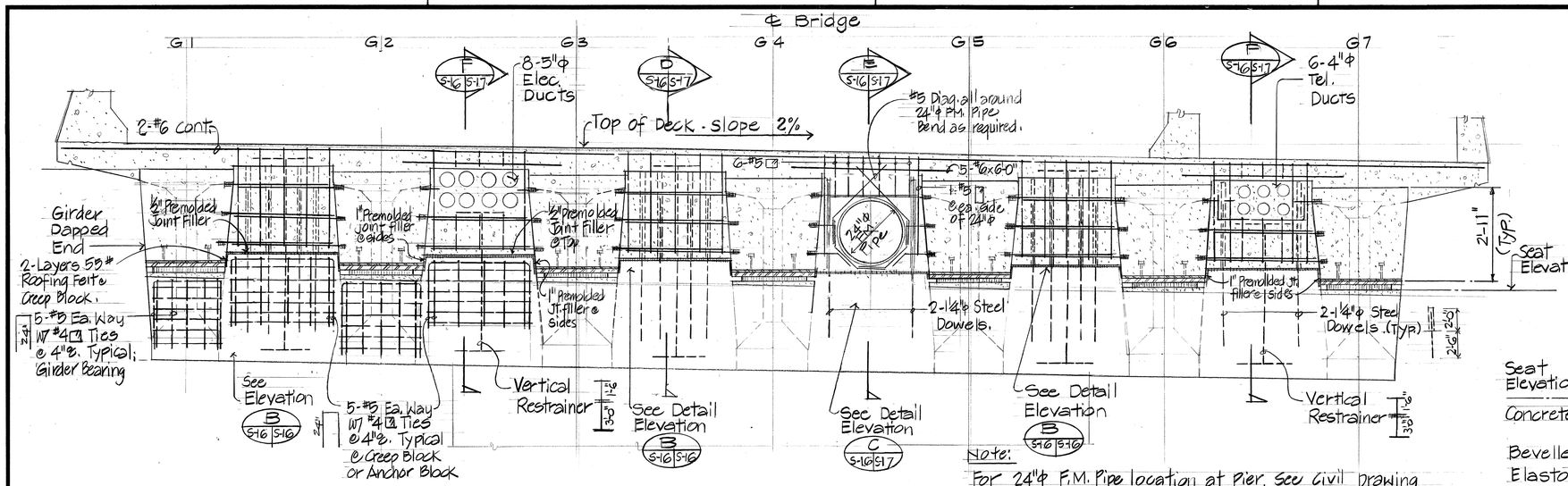

Note:
For 24"φ F.M. Pipe location at pier, see Civil Drawing Utility Plan and Profile sheets J4 & J5

GIRDER BEARING AT PIER - ELEVATION (A S-16 S-16)

Scale: ½" = 1'-0"

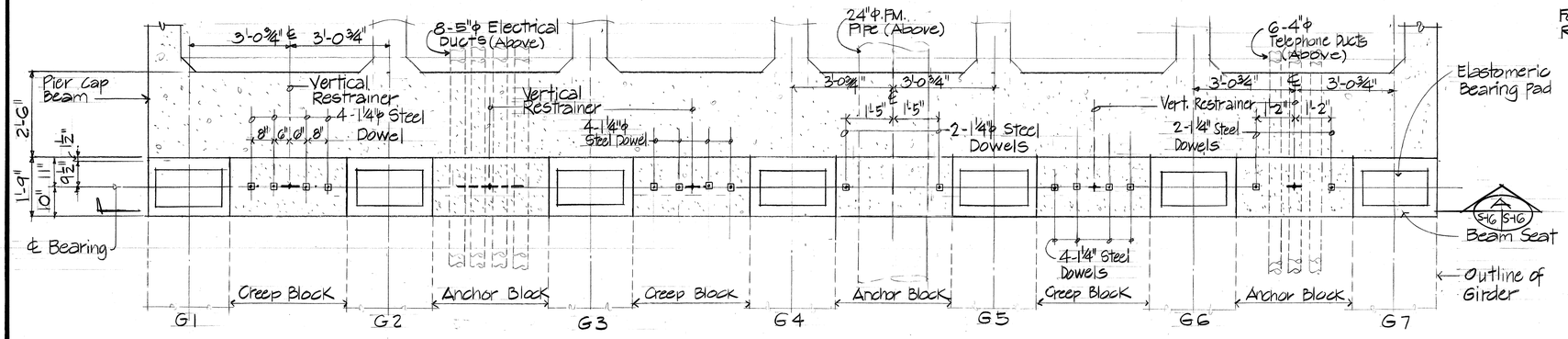

GIRDER BEARING AT PIER - PLAN

Scale: ½" = 1'-0"

+ Denotes Vertical Restrainer, see Detail (A S-16 S-26)

▫ Denotes 1¼" φ Dowel in 3½" x 1⅜" Galvanized Steel tube, see Detail (B S-16 S-26)

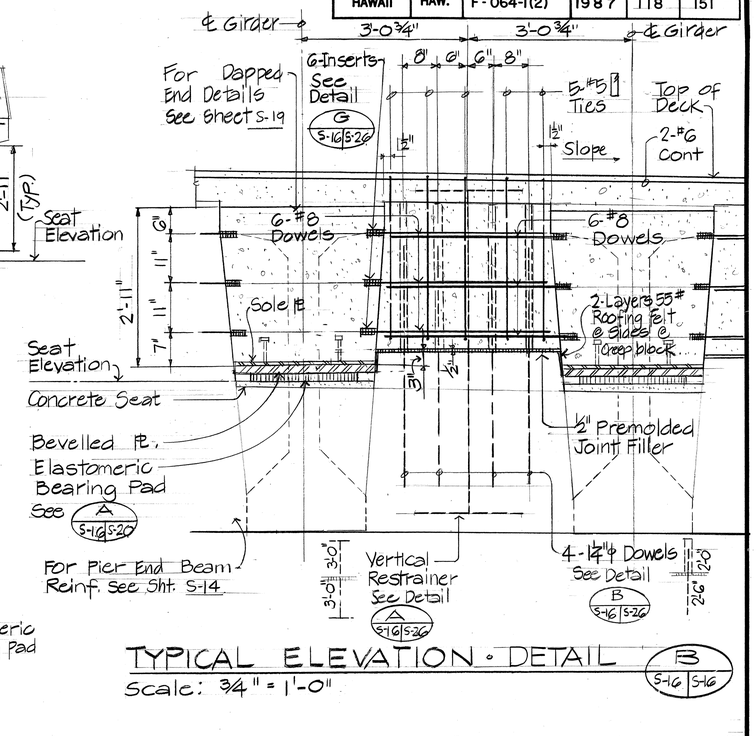

TYPICAL ELEVATION - DETAIL (B S-16 S-16)

Scale: ¾" = 1'-0"

GIRDER SEAT ELEVATIONS

Girder No.	PIER #1 ℄ Bearing - Seat Elevation Sta. 59+06.52	PIER #1 ℄ Bearing - Seat Elevation Sta. 59+43.02	PIER #2 ℄ Bearing - Seat Elevation Sta. 60+68.02	PIER #2 ℄ Bearing - Seat Elevation Sta. 61+03.02	PIER #3 ℄ Bearing - Seat Elevation Sta. 62+28.02	PIER #3 ℄ Bearing - Seat Elevation Sta. 62+63.02	PIER #4 ℄ Bearing - Seat Elevation Sta. 63+88.02	PIER #4 ℄ Bearing - Seat Elevation Sta. 64+27.52
G1	16.93	17.89	20.09	20.50	20.51	20.11	17.94	16.96
G2	16.81	17.77	19.97	20.39	20.40	19.99	17.82	16.84
G3	16.68	17.64	19.84	20.26	20.27	19.86	17.69	16.71
G4	16.56	17.52	19.72	20.14	20.15	19.74	17.57	16.59
G5	16.44	17.40	19.60	20.02	20.03	19.62	17.45	16.47
G6	16.31	17.27	19.47	19.88	19.89	19.49	17.32	16.34
G7	16.19	17.15	19.35	19.77	19.78	19.37	17.20	16.22

ORIGINAL PLAN		DATE
	SURVEY PLOTTED BY	
	DRAWN BY	
	TRACED BY	
NOTE BOOK	DESIGNED BY	
	QUANTITIES BY	
No.	CHECKED BY	

MYRON G. OKUBO REGISTERED PROFESSIONAL ENGINEER No. 4320-S HAWAII, U.S.A.

THIS WORK WAS PREPARED BY ME OR UNDER MY SUPERVISION

Myron Okubo

DATE	REVISION

STATE OF HAWAII
DEPARTMENT OF TRANSPORTATION
HIGHWAYS DIVISION

GIRDER BEARING AT PIER - DETAILS

SAND ISLAND ROAD WIDENING
2ND. BRIDGE AND APPROACHES
FEDERAL AID PROJECT NO. F-064-1(2)

SCALE: AS NOTED. DATE: JUN, 1986

SHEET No. S-16 OF 30 SHEETS

FED. ROAD DIST. NO.	STATE	FED. AID PROJ. NO.	FISCAL YEAR	SHEET NO.	TOTAL SHEETS
HAWAII	HAW.	F-064-1(2)	1987	119	151

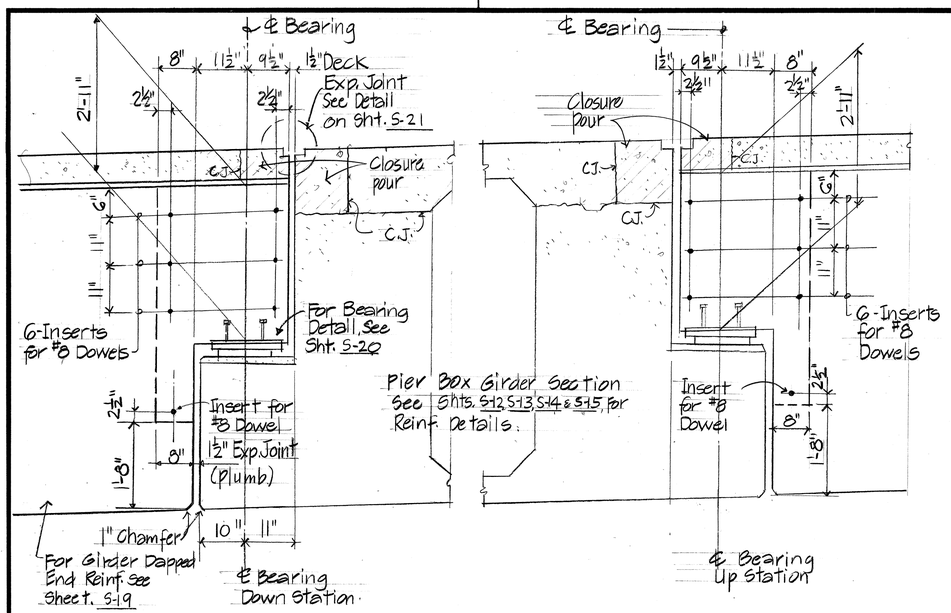

GIRDER BEARING AT DOWN STATION

SECTION A (S-17 | S-17)

Scale: 3/4" = 1'-0"

GIRDER BEARING AT UP STATION

SECTION B (S-17 | S-17)

Scale: 3/4" = 1'-0"

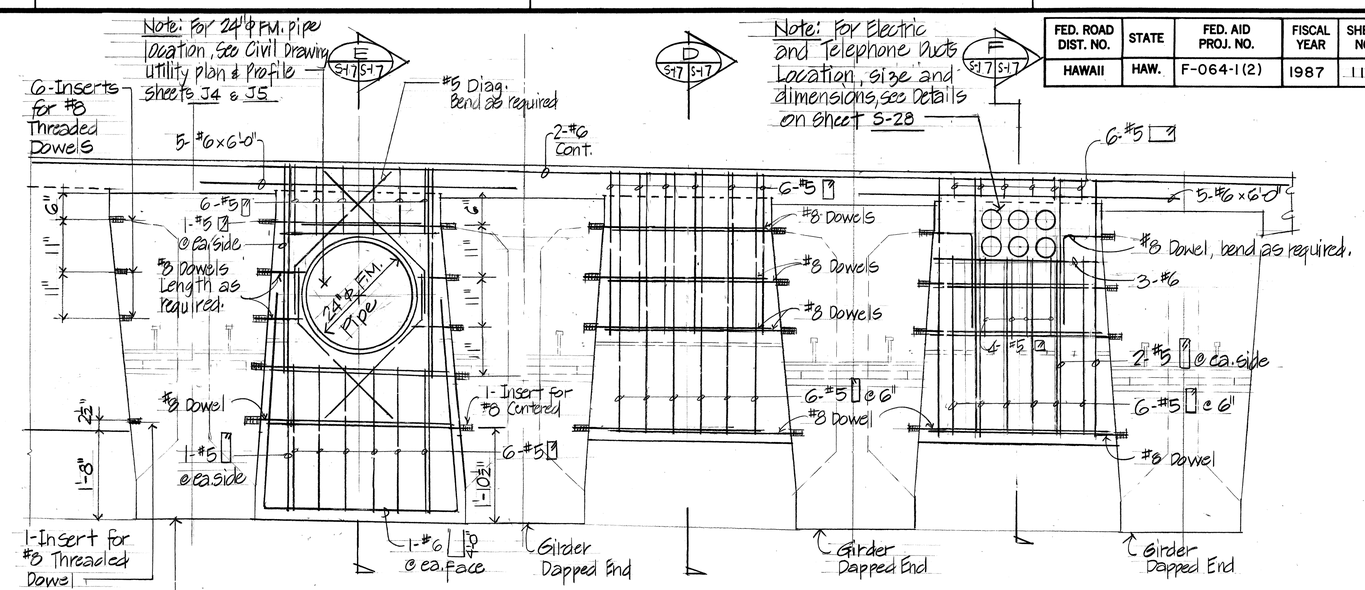

AT 24"φ PIPE THRU DIAPHRAGM

TYPICAL DIAPHRAGM

AT DUCTS THRU DIAPHRAGM

END DIAPHRAGM AT BOX PIER - PARTIAL ELEVATION (C S-16 | S-17)

Scale: 3/4" = 1'-0"

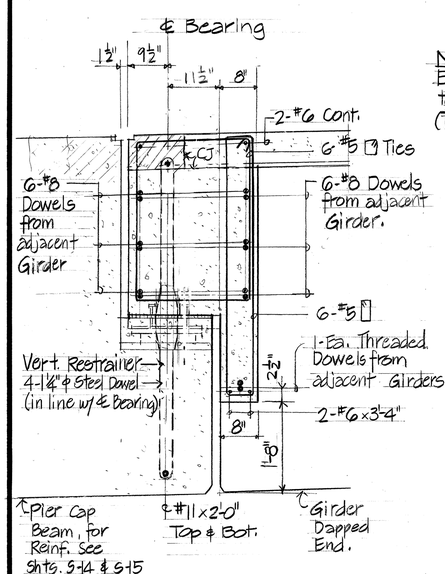

TYPICAL PIER DIAPHRAGM

SECTION D (S-17 | S-17) S-16

Scale: 3/4" = 1'-0"

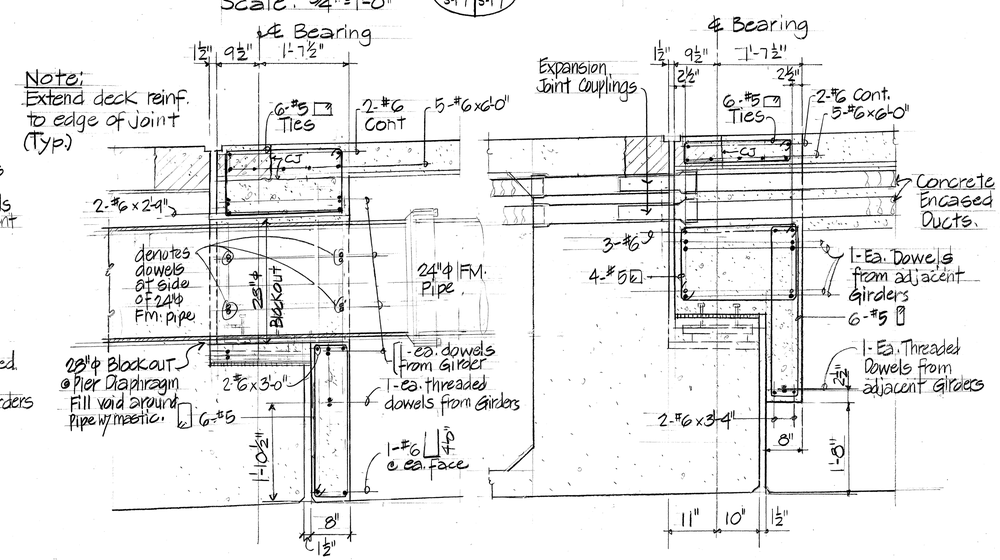

For 24"φ F.M. Pipe location at Pier Diaphragm See Civil Drawing Utility Plan and Profile sheets J4 & J5

FORCE MAIN THRU PIER DIAPHRAGM

SECTION E (S-17 | S-17) S-16

Scale: 3/4" = 1'-0"

DUCTS THRU PIER DIAPHRAGM (8-WAY & 6-WAY DUCTS SIMILAR)

SECTION F (S-17 | S-17) S-16, S-28

Scale: 3/4" = 1'-0"

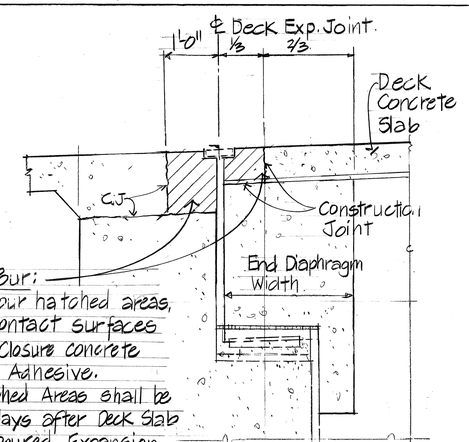

Closure Pour: Prior to pour hatched areas, coat all contact surfaces receiving Closure concrete with Epoxy Adhesive.
Note: Hatched Areas shall be poured 14 days after Deck Slab has been poured. Expansion Joint Anchor Devices shall be located and held in final position as per Manufacturers requirements.

CLOSURE POUR DETAIL (G S-17 | S-17)

N.T.S.

MYRON G. OKUBO REGISTERED PROFESSIONAL ENGINEER No. 4233-S HAWAII, U.S.A.

THIS WORK WAS PREPARED BY ME OR UNDER MY SUPERVISION

Myron Okubo

STATE OF HAWAII
DEPARTMENT OF TRANSPORTATION
HIGHWAYS DIVISION

END DIAPHRAGM AT BOX PIER DETAILS

SAND ISLAND ROAD WIDENING
2ND. BRIDGE AND APPROACHES
FEDERAL AID PROJECT NO. F-064-1(2)

SCALE: AS NOTED DATE: JUN, 1986

SHEET No. S-17 OF 30 SHEETS

DATE	REVISION

ORIGINAL PLAN | SURVEY PLOTTED BY | DRAWN BY | TRACED BY | DESIGNED BY | QUANTITIES BY | CHECKED BY | DATE | NOTE BOOK | No.

FED. ROAD DIST. NO.	STATE	FED. AID PROJ. NO.	FISCAL YEAR	SHEET NO.	TOTAL SHEETS
HAWAII	HAW.	F-064-1(2)	1987	120	151

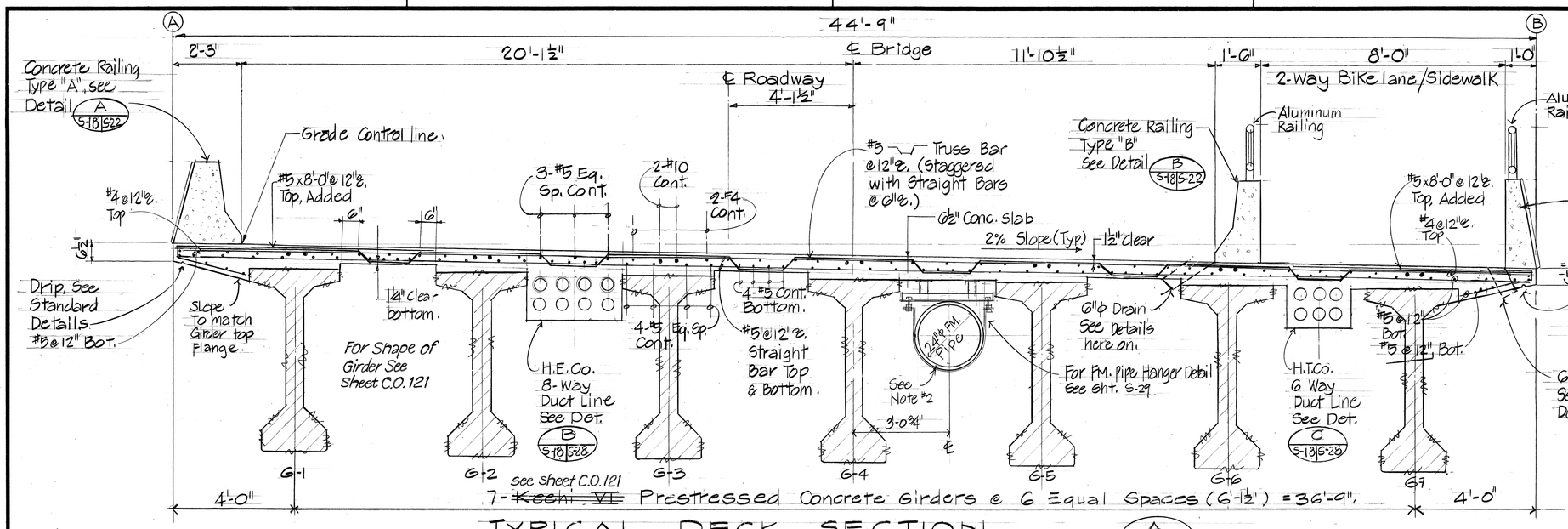

TYPICAL DECK SECTION (A)

Scale: ½" = 1'-0"

S-22, S-5

34"φ Block out at Diaphragm, 24"φ F.M. Pipe installed, and fill void around pipe with mastic.

Note: Hawaii State Standard Girder replaced by Contractor's Girder manufactured in Washington State.

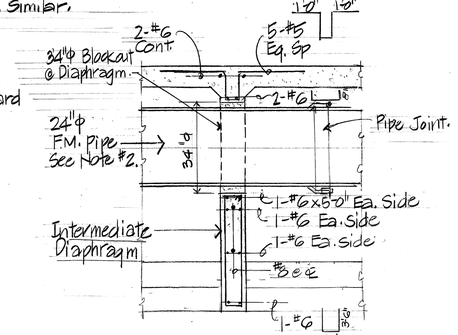

SECTION (E)

Scale: ½" = 1'-0"

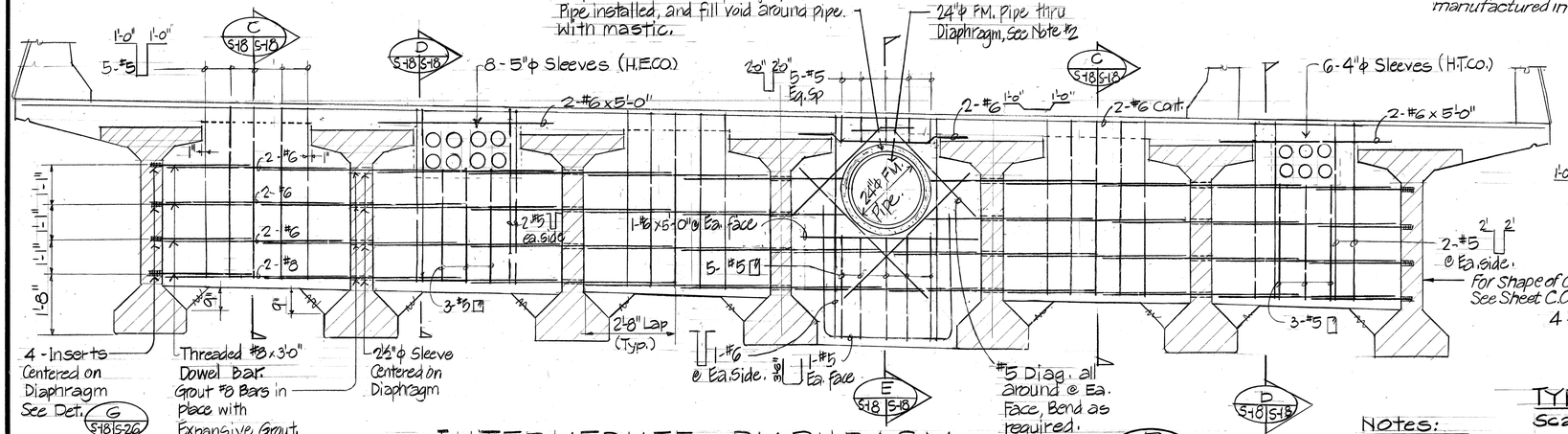

INTERMEDIATE DIAPHRAGM (B)

Scale: ½" = 1'-0"

S-5 S-18 S-18

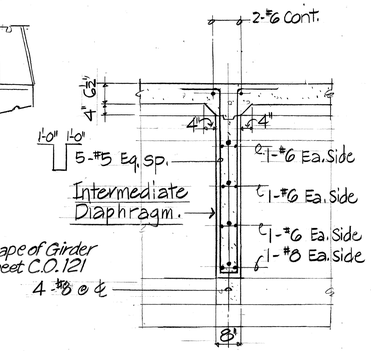

TYPICAL SECTION (C)

Scale: ½" = 1'-0"

S-18 S-18

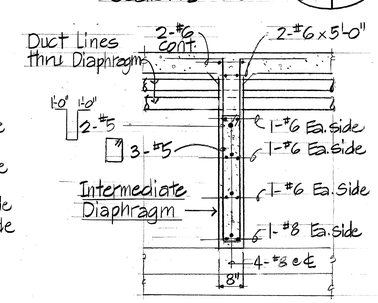

TYPICAL @ H.E.CO. & H.T.CO. DUCT LINE SECTION (D)

Scale: ½" = 1'-0"

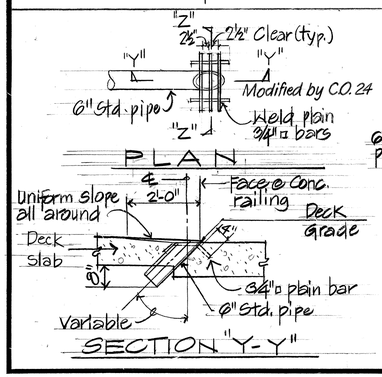

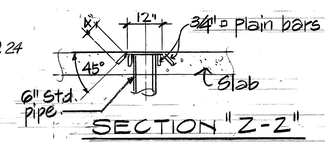

TYPICAL DRAINAGE DETAILS

Scale: ½" = 1'-0"

Notes:

1. For location of Intermediate Diaphragm, see Bridge Deck Framing Plan sheet S-5.
2. For 24"φ F.M. pipe location, see Utility Plan and Profile, Shts. J4 & J5. At Diaphragm, provide 34"φ Block hole for 24"φ F.M. pipe. Pack voids all around pipe with mastic.

Notes:

Metal drains shall be considered incidental to Class A Concrete in both concrete and steel bridges and will not be paid for separately. Assemblage of grillage and pipe shall be hot-dip galvanized after all welding is completed.

SURVEY PLOTTED BY
DRAWN BY
TRACED BY
DESIGNED BY
QUANTITIES BY
CHECKED BY
DATE
ORIGINAL PLAN
NOTE BOOK No.

MYRON G. OKUBO REGISTERED PROFESSIONAL ENGINEER No. 5270-S HAWAII, U.S.A.

THIS WORK WAS PREPARED BY ME OR UNDER MY SUPERVISION.

Myron Okubo

DATE	REVISION
9/1/87	Added Typ. Drain Details. Revised Note in Typ. Deck Section A/S-18

STATE OF HAWAII
DEPARTMENT OF TRANSPORTATION
HIGHWAYS DIVISION

TYPICAL DECK SECTION AND DETAILS

SAND ISLAND ROAD WIDENING
2ND. BRIDGE AND APPROACHES
FEDERAL AID PROJECT NO. F-064-1(2)

SCALE: AS NOTED. DATE: JUN, 1986

SHEET No. S-18 OF 30 SHEETS

"AS-BUILT"

120 R

FED. ROAD DIST. NO.	STATE	FED. AID PROJ. NO.	FISCAL YEAR	SHEET NO.	TOTAL SHEETS
HAWAII	HAW.	F-064-1(2)	1987	121	151

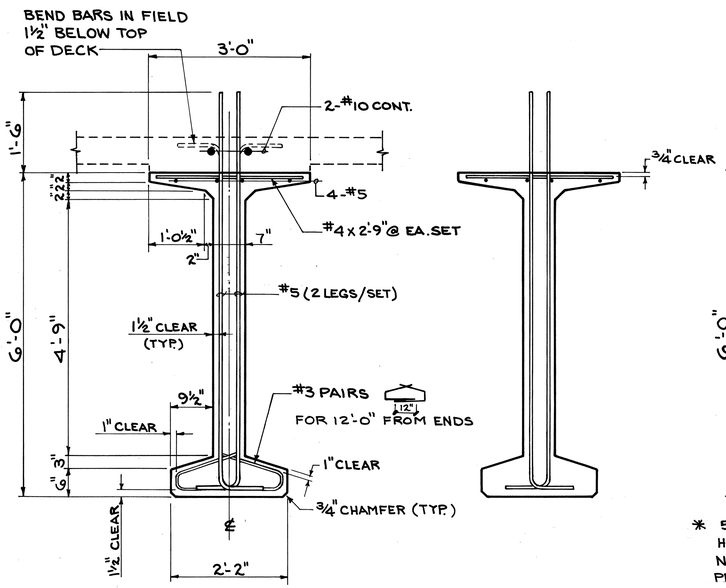

TYPICAL GIRDER SECTION (A S-19 S-19)
SCALE: 3/4" = 1'-0"

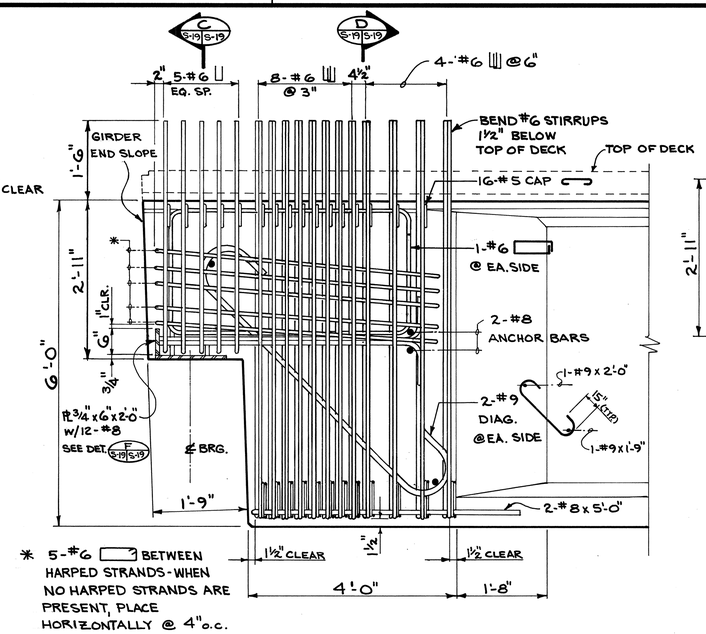

GIRDER DAPPED END DETAIL (B S-19 S-19)
SCALE: 3/4" = 1'-0"
S-5

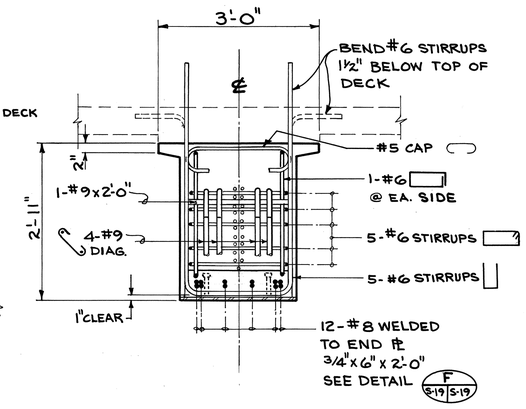

SECTION (C S-19 S-19)
SCALE: 3/4" = 1'-0"

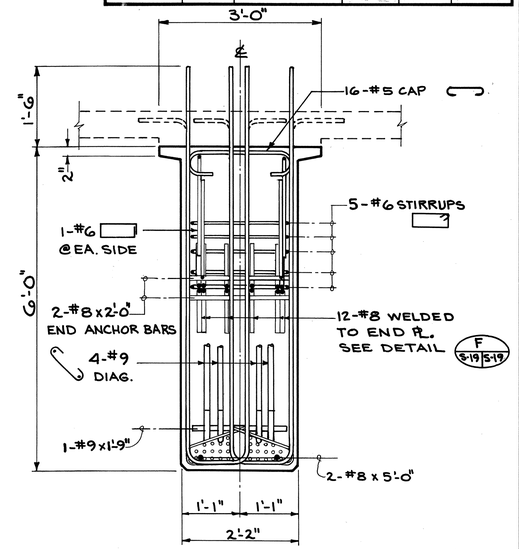

SECTION (D S-19 S-19)
SCALE: 3/4" = 1'-0"

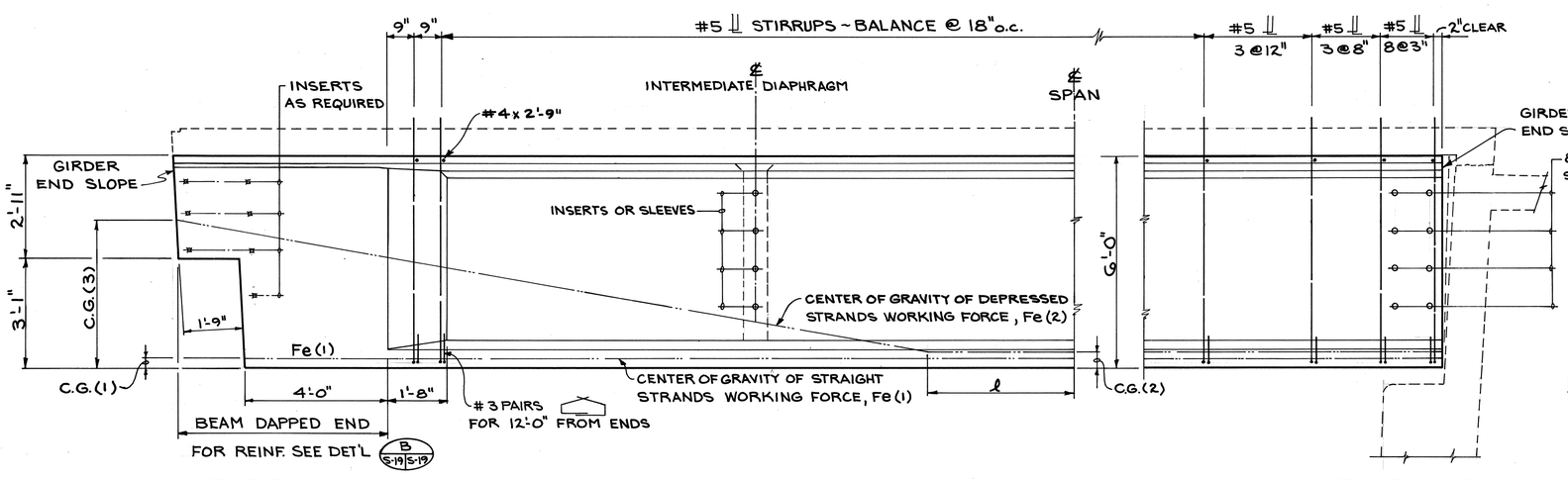

AT PIER

TYPICAL GIRDER LONGITUDINAL SECTION (E S-19 S-19)
NOT TO SCALE.

AT ABUTMENT

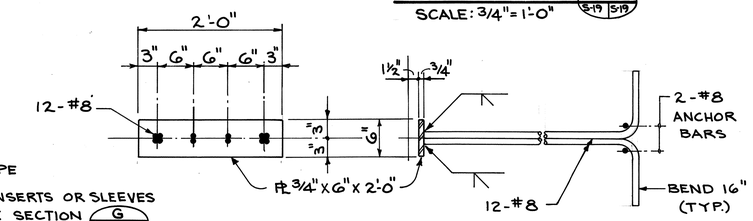

DETAIL (F S-19 S-19)
SCALE: 1" = 1'-0"

PL's SHALL CONFORM TO ASTM A588. ASSEMBLY SHALL BE HOT DIPPED GALVANIZED AFTER FABRICATION. PL's SHALL BE CONSIDERED INCIDENTAL TO PRESTRESSED GIRDERS. SOLE PLATE NOT SHOWN IN THIS DETAIL. SEE SHEET S-20

NOTES:

1. FOR GIRDER END SLOPE SEE BRIDGE DECK FRAMING PLAN. + ↷ CLOCKWISE SLOPE. − ↶ COUNTER CLOCKWISE SLOPE.
2. INSERTS AND SLEEVES SHALL BE CONSIDERED INCIDENTAL TO PRESTRESSED CONCRETE GIRDER.
3. GR. 60 REINF. USED FOR ALL REINFORCEMENT.
4. "As-Built" Girder Manufactured by Washington Technology Inc. Seattle, Washington.

ALEXANDER PORRAS JR. REGISTERED PROFESSIONAL ENGINEER No. 2312 HAWAII, U.S.A.

THIS WORK WAS PREPARED BY ME OR UNDER MY SUPERVISION

GIRDER SCHEDULE

GIRDER	Fe (1)	C.G.(1)	Fe (2)	C.G.(2)	C.G.(3)	ℓ	CALCULATED CAMBER	CALCULATED DEAD LOAD DEFLECTION						
								G1	G2	G3	G4	G5	G6	G7
1-G1 — 1-G7	450K	3.28"	250K	3.60"	49.50"	9.08'	-1.01"	0.50"	0.50"	0.50"	0.50"	0.50"	0.50"	0.50"
2-G1 — 2-G7	672K	4.37"	471K	5.57"	53.42"	12.5'	-2.18"	2.09"	2.09"	2.09"	2.09"	2.09"	2.09"	2.09"
3-G1 — 3-G7	672K	4.37"	471K	5.57"	53.42"	12.5'	-2.18"	2.09"	2.09"	2.09"	2.09"	2.09"	2.09"	2.09"
4-G1 — 4-G7	672K	4.37"	471K	5.57"	53.42"	12.5'	-2.18"	2.09"	2.09"	2.09"	2.09"	2.09"	2.09"	2.09"
5-G1 — 5-G7	219K	2.50"	110K	3.00"	46.88"	—	-0.19"	0.10"	0.10"	0.10"	0.10"	0.10"	0.10"	0.10"

NOTE:
VECP MADE BY CONTRACTOR

DATE	REVISION
APR. 1988	PER H.D.O.T. REVIEW
APR. 1988	CAMBER & DEFLECTIONS
MAR. 1988	CAMBER & DEFLECTIONS
FEB. 1988	SHEET REDRAWN FOR ALTERNATE GIRDER SECTION

STATE OF HAWAII
DEPARTMENT OF TRANSPORTATION
LAND TRANSPORTATION FACILITIES DIVISION

GIRDER DETAILS

SAND ISLAND ROAD WIDENING
2ND BRIDGE AND APPROACHES
FEDERAL AID PROJECT NO. F-064-1(2)

SCALE: AS NOTED DATE: JUN. 1986
SHEET No. S-19 OF 30 SHEETS

ORIGINAL PLAN — SURVEY PLOTTED BY — DRAWN BY — TRACED BY — DESIGNED BY — QUANTITIES BY — CHECKED BY — DATE — NOTE BOOK No. — No.

"AS-BUILT"

C.O. 121

FED. ROAD DIST. NO.	STATE	FED. AID PROJ. NO.	FISCAL YEAR	SHEET NO.	TOTAL SHEETS
HAWAII	HAW.	F-064-1(2)	1987	122	151

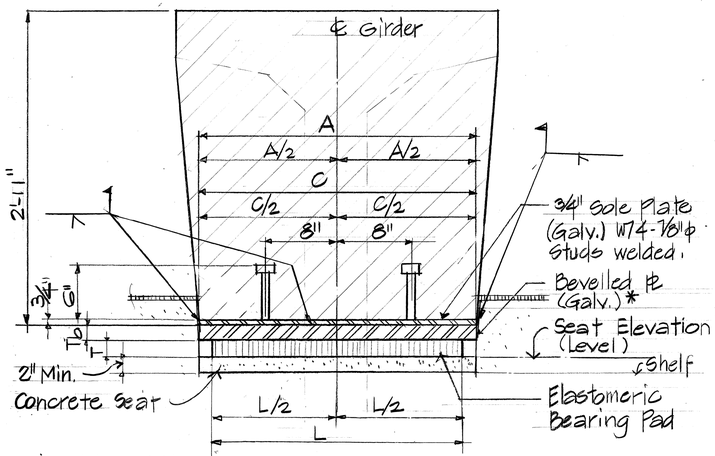

* No bevelled plate required for Bearing Type IV.

CONDITION AT PIER

BEARING - SECTION A (S-20 | S-20) S-16

Scale: 1½" = 1'-0"

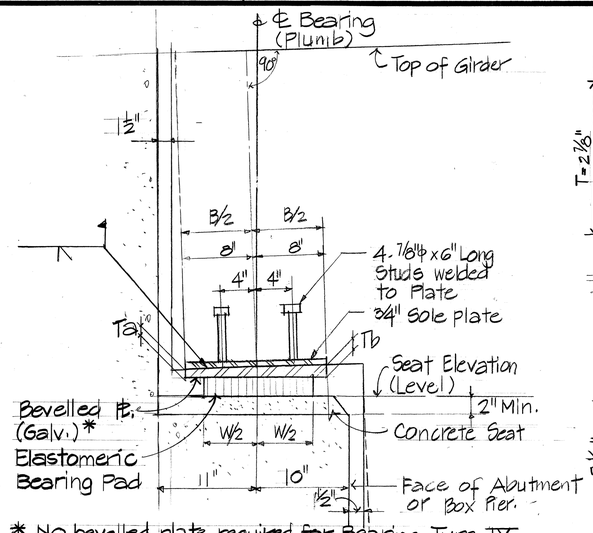

* No bevelled plate required for Bearing Type IV.

SECTION C (S-20 | S-20)

Scale: 1½" = 1'-0"

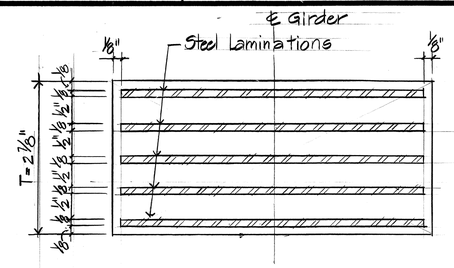

Steel Laminated Elastomeric Bearing Pad

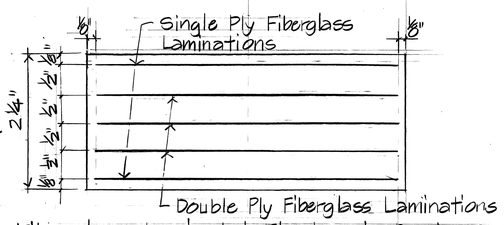

Fiberglass Laminated Elastomeric Bearing Pad.

Notes

1. Bevelled and sole plates shall conform to ASTM A 242, and shall be hot dipped galvanized after fabrication.
2. 7/8"φ studs shall be welded to sole Pl. with automatically timed welding equipment.
3. Bevelled Pl. shall be welded to sole Pl. prior to erection of the girder at the job site.
4. Galvanized coatings damaged during welding operations or any phase of construction shall be repaired by a field galvanizing method conforming to Annex A1 of ASTM A780 and to subsection 501.03 (G) Galvanizing of specifications. Repair shall be by the use of repair material conforming to Federal Specification O-G-93, stick form.
5. Sole Pl's. and Bevelled Pl's. are incidental Keehi VI Prestressed Concrete Girders.
6. For Bearing Type location, See Bridge Deck Framing Plan, Sheet S-5.

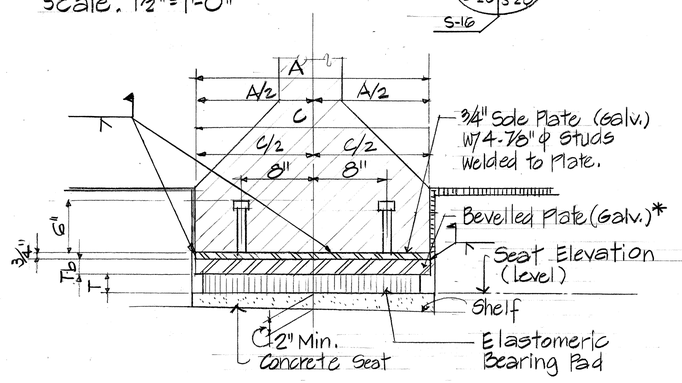

* No bevelled plate required for Bearing Type IV.

CONDITION AT ABUTMENT

BEARING - SECTION B (S-20 | S-20)

Scale: 1½" = 1'-0"

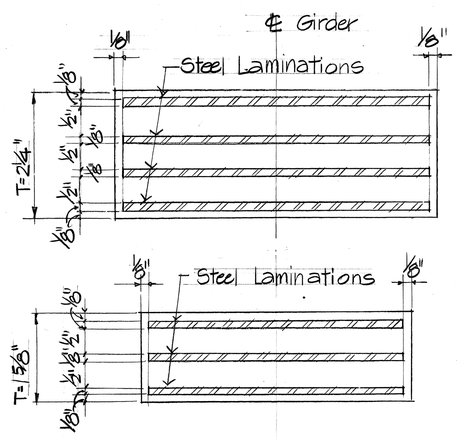

Steel Laminated Elastomeric Bearing Pad

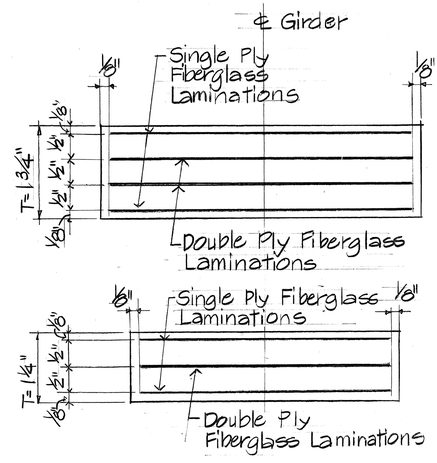

Fiberglass Laminated Elastomeric Bearing Pad.

ELASTOMERIC BEARING PADS D (S-20 | S-20)

N.T.S.

Elastomeric Bearing Pads shall have a Durometer Hardness of 60 ± 5. Elastomeric Bearing Pads shall be considered Incidental to Concrete in Bridge.

All Girder Seat Elevations are based on Steel Laminated Bearing Pads. Should the Contractor elect to use Fiberglass Laminated Bearing Pads, he shall insure that the Fiberglass Laminated Bearing Pads comply with the Drawings and Special Provisions. The Contractor shall also revise the Girder Seat Elevations to reflect the thickness of the Fiberglass Laminated Bearing Pads. All Revisions shall be approved by the Engineer.

BEARING SCHEDULE

Bearing Type	Bevelled Pl.				Sole Pl. 3/4" Thk.	Elastomeric Bearing Pad		
	A	B	Ta	Tb	C	L	W	T
I	26"	16"	0.98"	1.52"	26"	24"	10"	2 1/4"
II	31"	16"	0.98"	1.52"	31"	28"	9"	2 1/4"
III	31"	16"	1.11"	1.39"	31"	28"	12"	2 7/8"
IV	31"	16"	N/A	N/A	31"	28"	12"	2 7/8"
V	31"	16"	1.39"	1.11"	31"	28"	12"	2 7/8"
VI	26"	16"	1.50"	1.00	31"	28"	7"	1 5/8"
VII	26"	16"	1.50"	1.00"	26"	24"	8"	1 5/8"

Ta is the Plate thickness at Down Station End of the Bevelled Pl.
Tb is the Plate thickness at Up Station End of the Bevelled Pl.

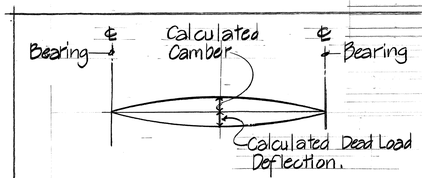

Calculated Dead Load Deflection accounts for the effects of the weight of Deck Slab, Haunches, and Diaphragms.

CAMBER DIAGRAM

No Scale

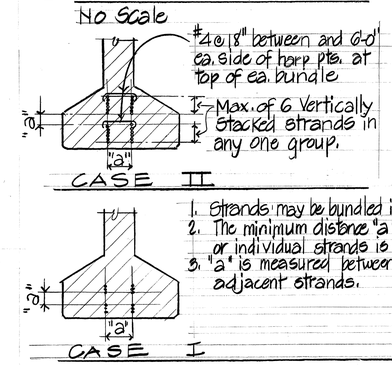

1. Strands may be bundled in groups as shown.
2. The minimum distance "a" between groups or individual strands is 2" or ½"ϕ strands.
3. "a" is measured between centers of adjacent strands.

BUNDLING PRESTRESSING REINFORCEMENT DETAIL

No scale:

MYRON G. OKURO REGISTERED PROFESSIONAL ENGINEER No. 4320-S HAWAII, U.S.A.

THIS WORK WAS PREPARED BY ME OR UNDER MY SUPERVISION

Myron Okuro

DATE	REVISION

STATE OF HAWAII
DEPARTMENT OF TRANSPORTATION
HIGHWAYS DIVISION

GIRDER AND BEARING DETAILS

SAND ISLAND ROAD WIDENING
2ND. BRIDGE AND APPROACHES
FEDERAL AID PROJECT NO. F-064-1(2)

SCALE: AS NOTED. DATE: JUN, 1986

SHEET No. S-20 OF 30 SHEETS

ORIGINAL PLAN | SURVEY PLOTTED BY | DRAWN BY | TRACED BY | DESIGNED BY | QUANTITIES BY | CHECKED BY | DATE | NOTE BOOK | No.

FED. ROAD DIST. NO.	STATE	FED. AID PROJ. NO.	FISCAL YEAR	SHEET NO.	TOTAL SHEETS
HAWAII	HAW.	F-064-1(2)	1987	123	151

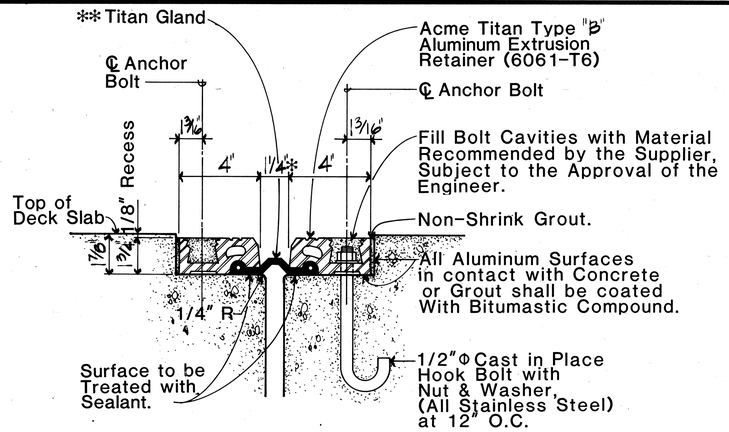

ACME TITAN TYPE "B"

Not to scale
(Manufacturer: Acme Highway Products Co.)

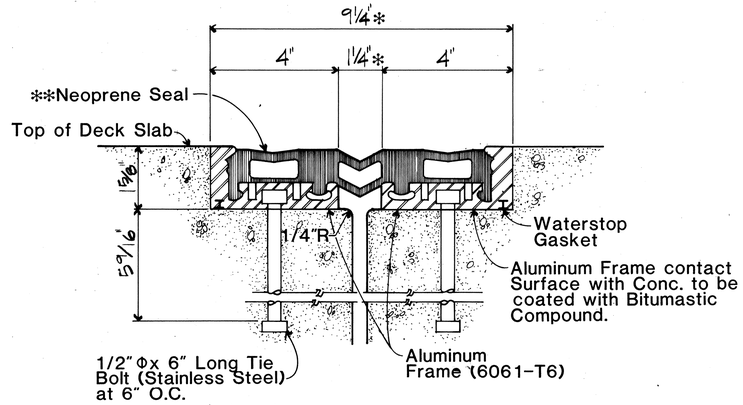

DELASTIFLEX TYPE SM 200

Not to scale
(Manufacturer: D.S. Brown & Co.)

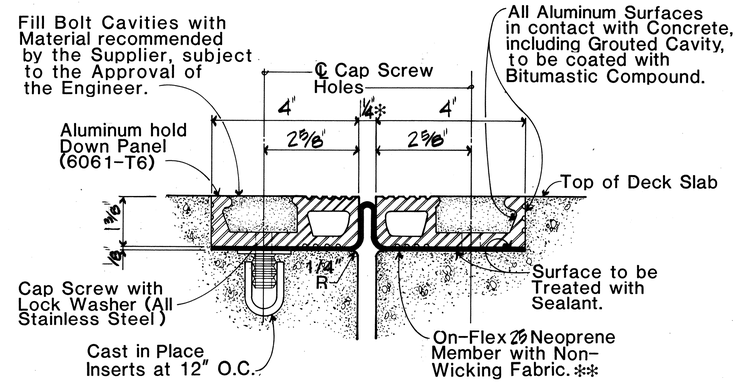

ON-FLEX 25

Not to scale
(Manufacturer: Structural Accessories Inc.)

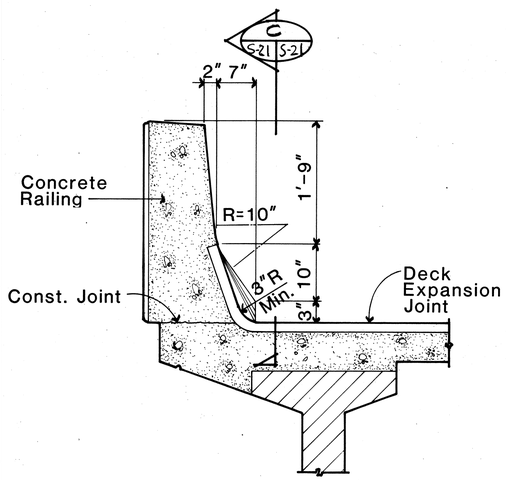

TYPICAL DETAIL (A S-21 S-21)

Scale: 1" = 1'-0"

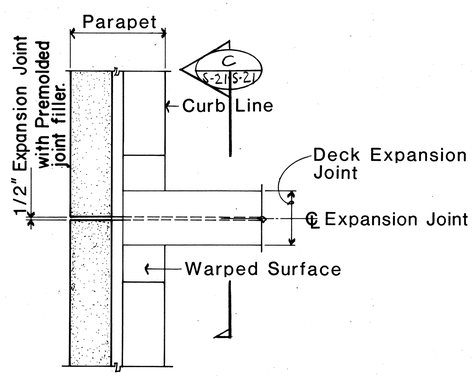

PLAN (B S-21 S-21)

Scale: 1" = 1'-0"

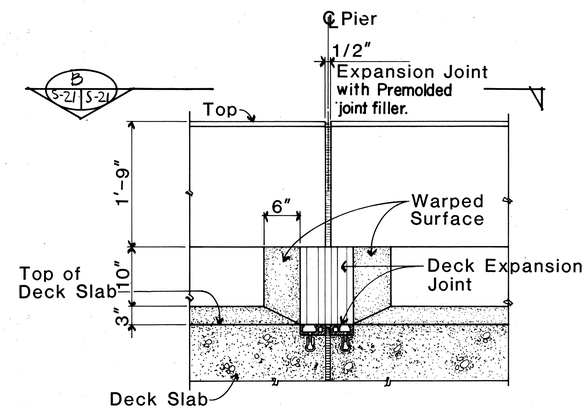

SECTION (C S-21 S-21)

Scale: 1" = 1'-0"

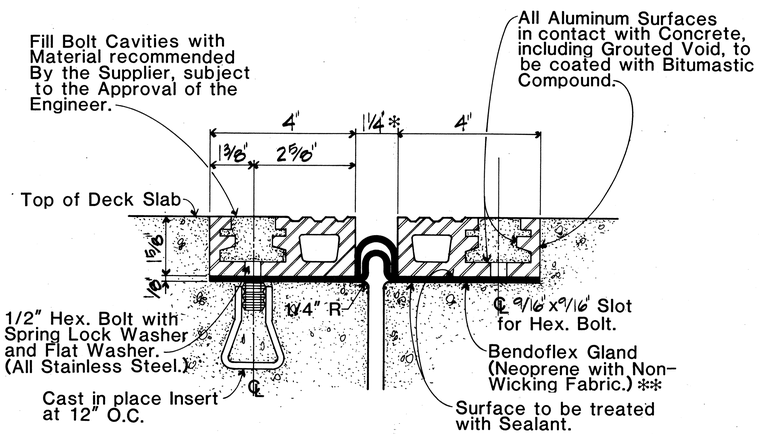

WABO BENDOFLEX 250

Not to scale
(Manufacturer: Watson Bowman Assoc. Inc.)

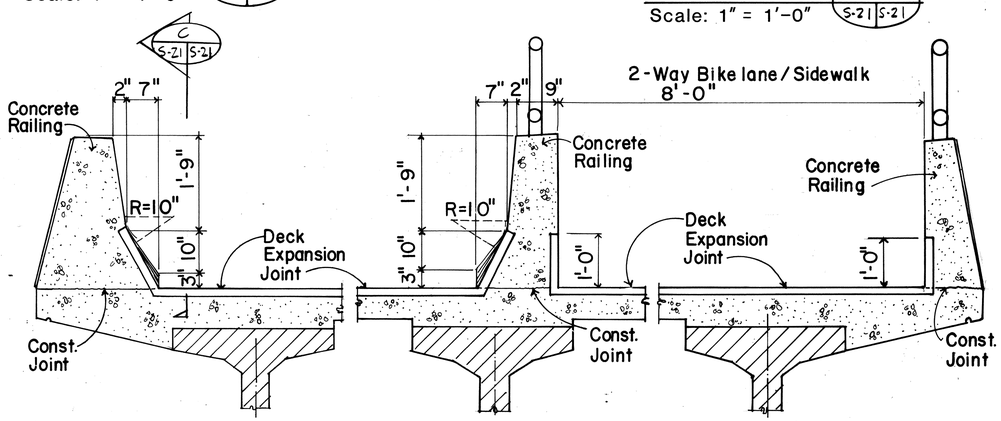

ALTERNATE DETAIL (D S-21 S-21)

Scale: 3/4" = 1'-0"

TYPICAL DETAILS (E S-21 S-21)

Scale: 3/4" = 1'-0"

DECK EXPANSION JOINT NOTES

1. Four Alternate Deck Expansion Joint Systems are shown. Contractor has the Option of selecting any One of the Systems. The Contractor shall submit Detailed Shop Drawings of the selected Joint to the Engineer for Approval.
2. The Contractor also has the Option of using an Alternate Expansion Joint System provided it complies with the Plans and Specifications.

*Installation Width at 75° F.

**Seal Gland or Membrane shall be continuous across the Full Width of the Structure.

ORIGINAL PLAN	SURVEY PLOTTED BY	DATE
	DRAWN BY	
NOTE BOOK	TRACED BY	
	DESIGNED BY	
	QUANTITIES BY	
No.	CHECKED BY	

AYRON G. OKUBO REGISTERED PROFESSIONAL ENGINEER No. 4720-3 HAWAII, U.S.A.

THIS WORK WAS PREPARED BY ME OR UNDER MY SUPERVISION

Myron Okubo

DATE	REVISION

STATE OF HAWAII
DEPARTMENT OF TRANSPORTATION
HIGHWAYS DIVISION

DECK EXPANSION JOINT DETAILS

SAND ISLAND ROAD WIDENING
2ND. BRIDGE AND APPROACHES
FEDERAL AID PROJECT NO. F-064-1(2)

SCALE: AS NOTED DATE: JUN, 1986

SHEET No. S-21 OF 30 SHEETS

FED. ROAD DIST. NO.	STATE	FED. AID PROJ. NO.	FISCAL YEAR	SHEET NO.	TOTAL SHEETS
HAWAII	HAW.	F-064-1(2)	1987	124	151

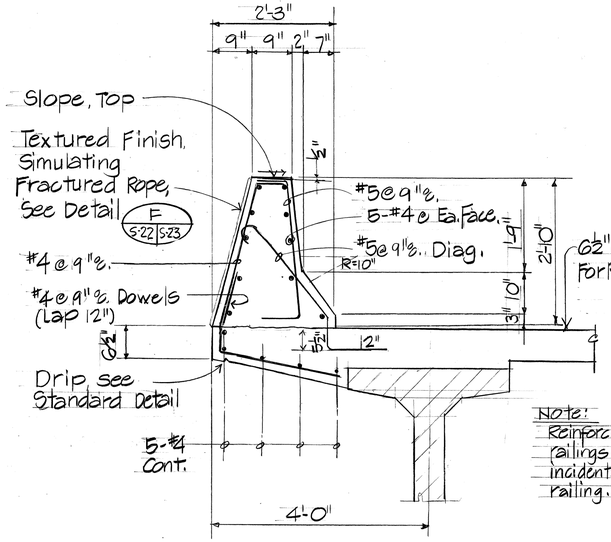

TYPE "A" CONCRETE RAILING DET. A S-22 S-22 S-18
Scale: 3/4" = 1'-0"

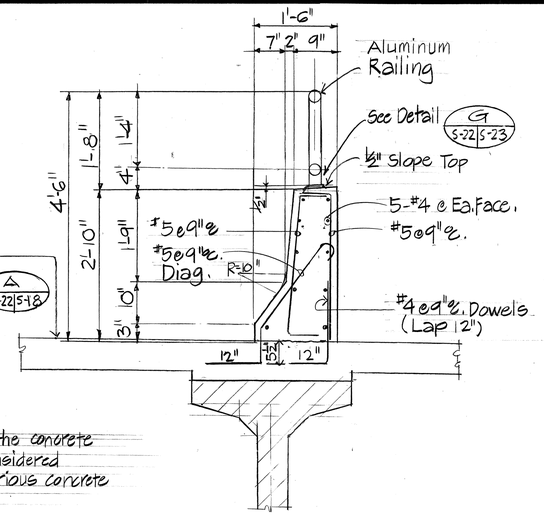

Note:
Reinforcing steel in the concrete railings shall be considered incidental to the various concrete railing.

TYPE "B" CONCRETE RAILING DET. B S-29 S-18 S-22
Scale: 3/4" = 1'-0"

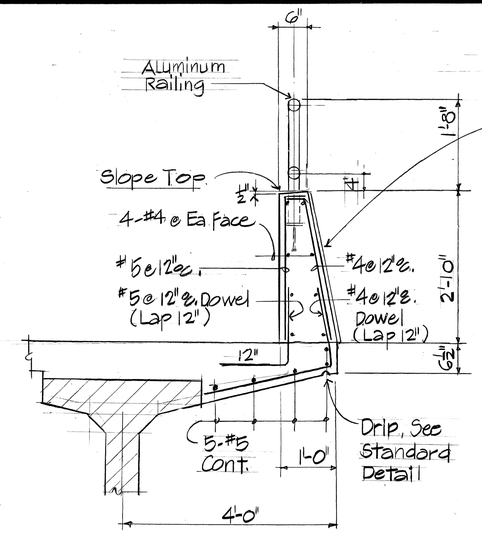

TYPE "C" CONCRETE RAILING DET. C S-18 S-22 S-6
Scale: 3/4" = 1'-0"

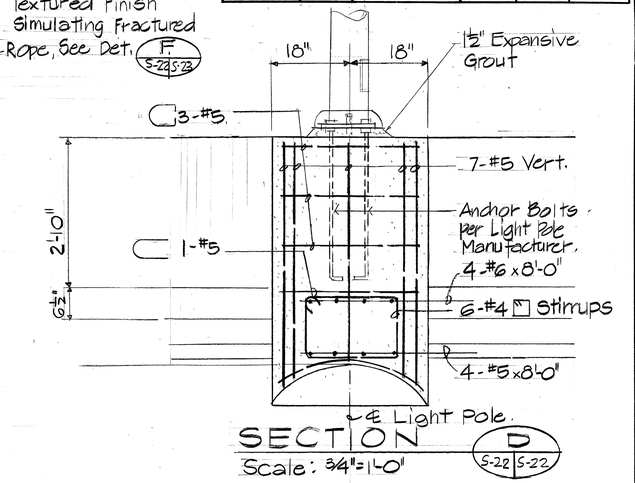

SECTION D S-22 S-22
Scale: 3/4" = 1'-0"

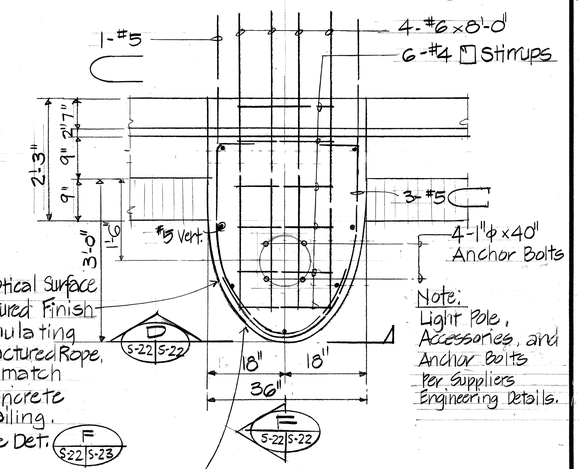

PLAN
Scale: 3/4" = 1'-0"

Note:
For Light Pole Details see Electrical Dwgs.

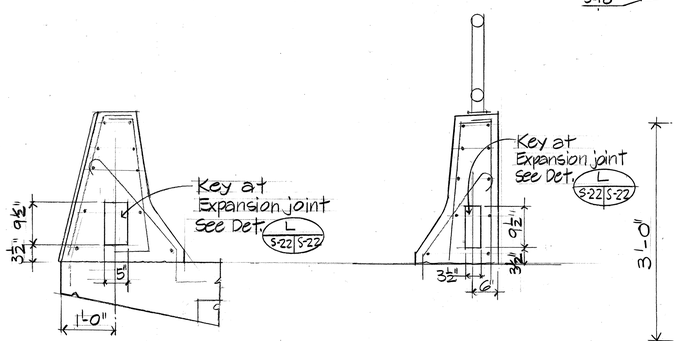

KEY @ TYPE "A" CONCRETE RAILING H S-22 S-22
Scale: 3/4" = 1'-0"

KEY @ TYPE "B" CONCRETE RAILING J S-22 S-22
Scale: 3/4" = 1'-0"

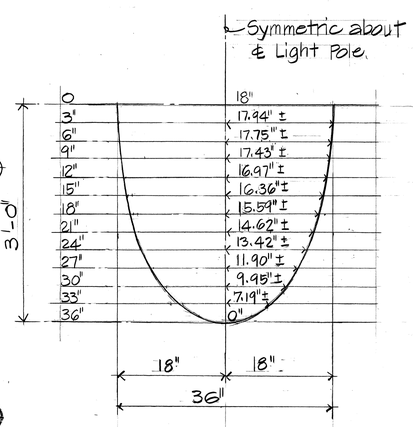

0	18"
3"	17.94" ±
6"	17.75" ±
9"	17.43" ±
12"	16.97" ±
15"	16.36" ±
18"	15.59" ±
21"	14.62" ±
24"	13.42" ±
27"	11.90" ±
30"	9.95" ±
33"	7.19" ±
36"	0"

LIGHT POLE CONCRETE SUPPORT SHAPE DETAIL G S-22 S-22
N.T.S.

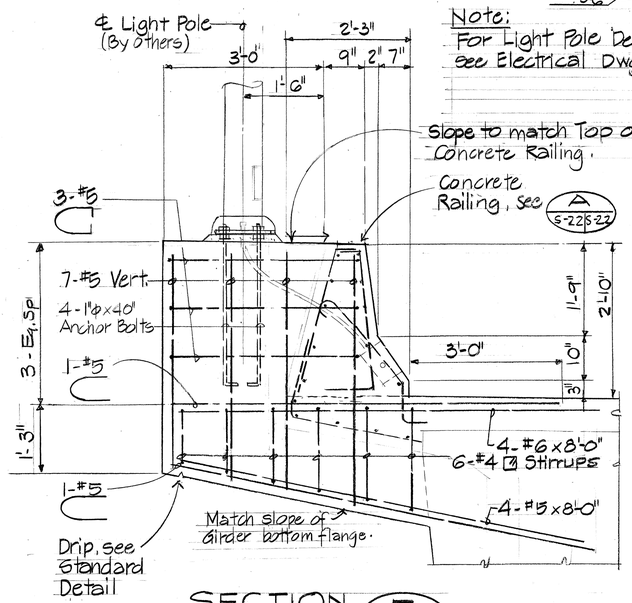

SECTION E S-22 S-22
Scale: 3/4" = 1'-0"

LIGHT POLE DETAIL E S-22 S-22

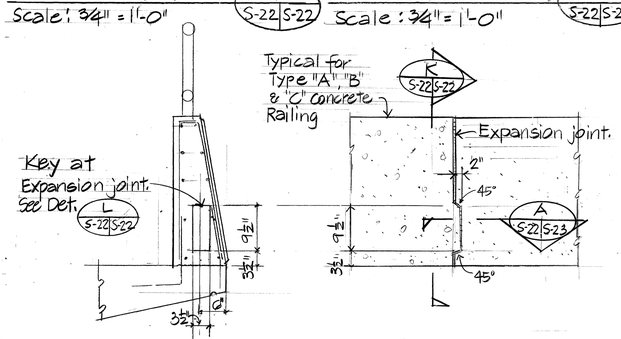

KEY @ TYPE "C" CONCRETE RAILING K S-22 S-22
Scale: 3/4" = 1'-0"

KEY DETAIL L S-22 S-22
Scale: 3/4" = 1'-0"

SURVEY PLOTTED BY
DRAWN BY
TRACED BY
DESIGNED BY
QUANTITIES BY
CHECKED BY
DATE
ORIGINAL PLAN
NOTE BOOK No.

REGISTERED PROFESSIONAL ENGINEER No. 4320-S HAWAII, U.S.A. MYRON G. OKUBO

THIS WORK WAS PREPARED BY ME OR UNDER MY SUPERVISION
Myron Okubo

DATE	REVISION

STATE OF HAWAII
DEPARTMENT OF TRANSPORTATION
HIGHWAYS DIVISION

CONCRETE RAILING AND STREET LIGHT DETAILS

SAND ISLAND ROAD WIDENING
2ND. BRIDGE AND APPROACHES
FEDERAL AID PROJECT NO. F-064-1(2)

SCALE: AS NOTED. DATE: JUN, 1986

SHEET No. S-22 OF 30 SHEETS

FED. ROAD DIST. NO.	STATE	FED. AID PROJ. NO.	FISCAL YEAR	SHEET NO.	TOTAL SHEETS
HAWAII	HAW.	F-064-1(2)	1987	125	151

Notes:
1. Bend longitudinal bars 12" min.
2. See Sheet S-5 for location of Expansion Joints.

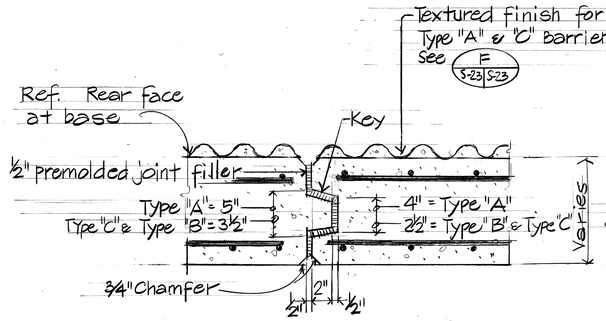

See Note #1 & #2

PLAN
EXPANSION JOINT KEY A
N.T.S. S-22 S-23 S-23

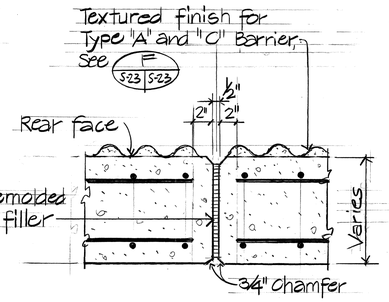

See Notes #1 & #2

PLAN
EXPANSION JOINT B
N.T.S. S-23 S-23

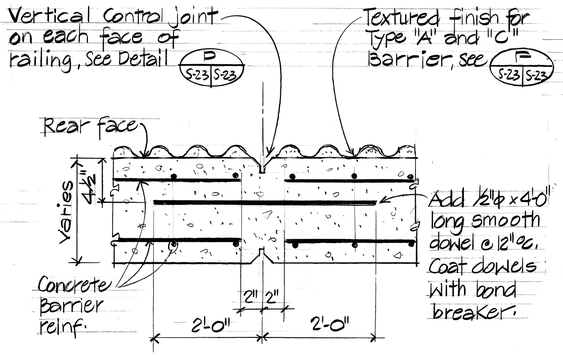

See Notes #1 & #2

PLAN
CONTROL JOINT C
N.T.S. S-23 S-23

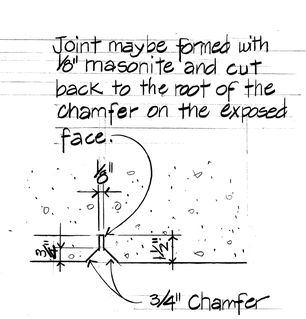

PLAN
DETAIL D
N.T.S. S-23 S-23

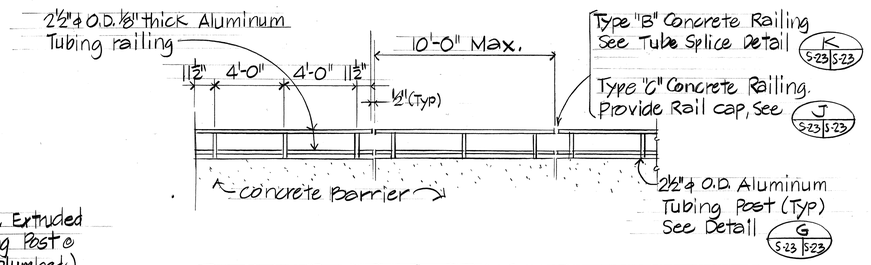

RAILING POST SPACING E
N.T.S. S-23 S-23

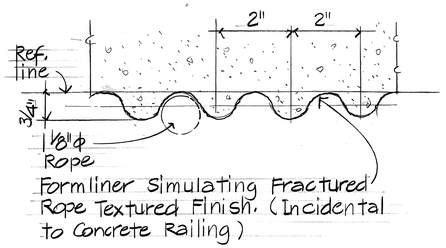

TEXTURED FINISH DETAIL F
N.T.S. S-24, S-22 S-23 S-23

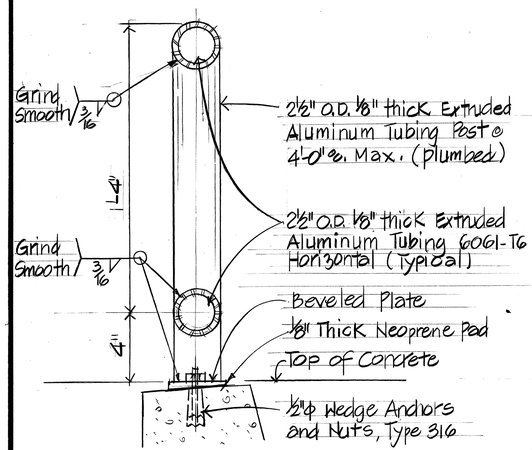

SECTION

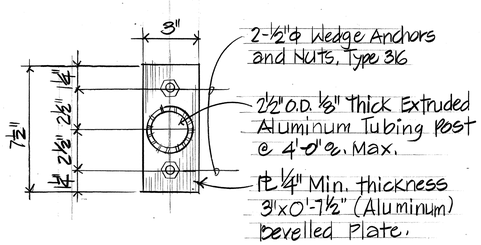

ALUMINUM RAILING DETAIL G
N.T.S. S-22 S-23 S-23

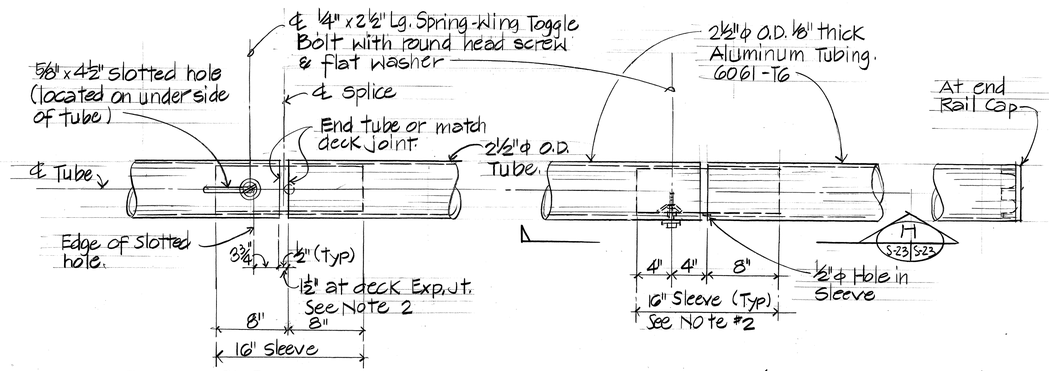

SECTION H
N.T.S. S-23 S-23

SLEEVE - (FRONT VIEW)
N.T.S.

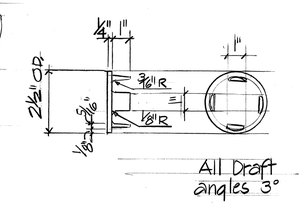

RAIL CAP DETAIL J
N.T.S. S-23 S-23

TYPE "B" CONCRETE RAILING - TUBE SPLICE DETAIL K
S-23 S-23

Notes:
1. Slotted hole & toggle bolts shall be located on underside of tube.
2. All tubes shall be spliced where shown in E S-23 S-23 and in the panel spanning deck Expansion joints. Increase joint width between tube to ½" and increase sleeve length by 1" at Expansion joints.

ROSCOE O. FORD
REGISTERED PROFESSIONAL ENGINEER
No. 3731-S
HAWAII, U.S.A.

THIS WORK WAS PREPARED BY ME OR UNDER MY SUPERVISION.
Roscoe O. Ford

DATE	REVISION

STATE OF HAWAII
DEPARTMENT OF TRANSPORTATION
HIGHWAYS DIVISION

CONCRETE RAILING DETAILS

SAND ISLAND ROAD WIDENING
2ND. BRIDGE AND APPROACHES
FEDERAL AID PROJECT NO. F-064-1(2)

SCALE: AS NOTED. DATE: JUN, 1986

SHEET No. S-23 OF 30 SHEETS

ORIGINAL PLAN | SURVEY PLOTTED BY | DRAWN BY | TRACED BY | DESIGNED BY | QUANTITIES BY | CHECKED BY | DATE | NOTE BOOK No.

FED. ROAD DIST. NO.	STATE	FED. AID PROJ. NO.	FISCAL YEAR	SHEET NO.	TOTAL SHEETS
HAWAII	HAW.	F-064-1(2)	1987	126	151

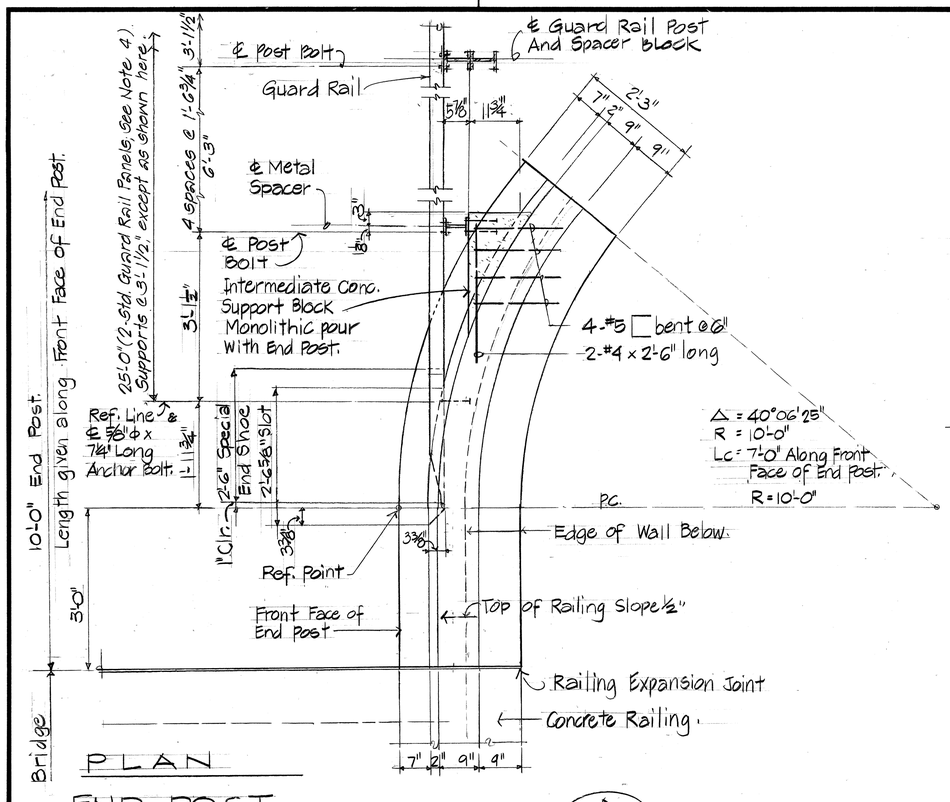

PLAN

END POST

Scale: 3/4" = 1'-0"

A S-7 S-24 S-6

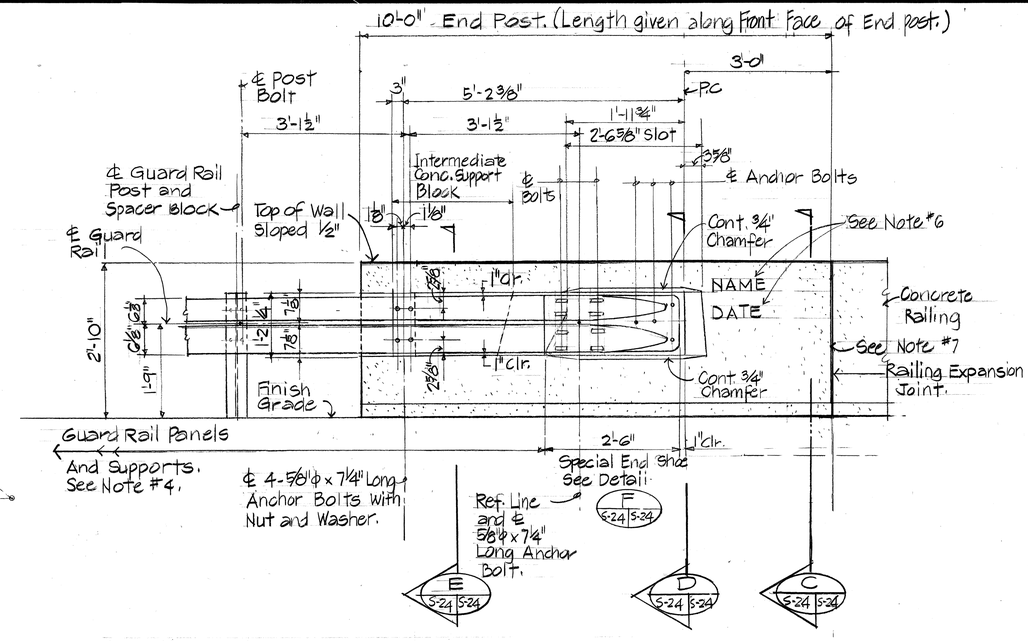

ELEVATION

Scale: 3/4" = 1'-0"

B S-24 S-24

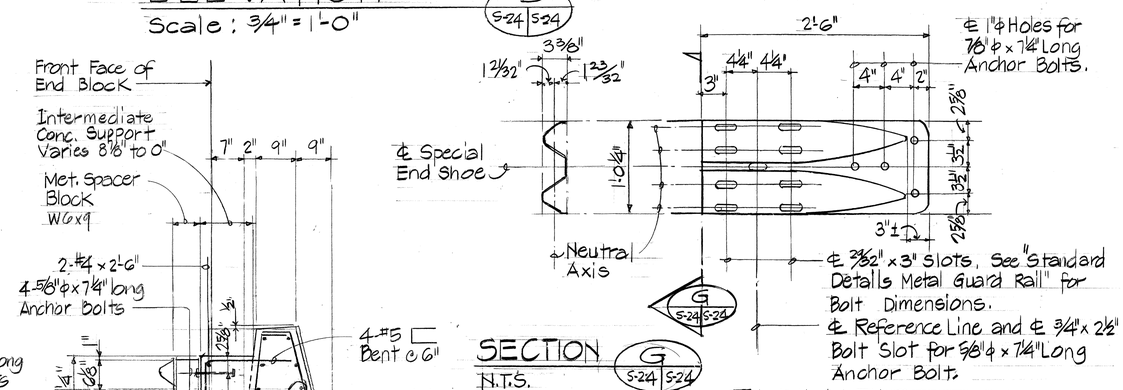

SECTION G S-24 S-24

N.T.S.

ELEVATION

N.T.S.

SPECIAL END SHOE DETAIL F S-24 S-24

N.T.S.

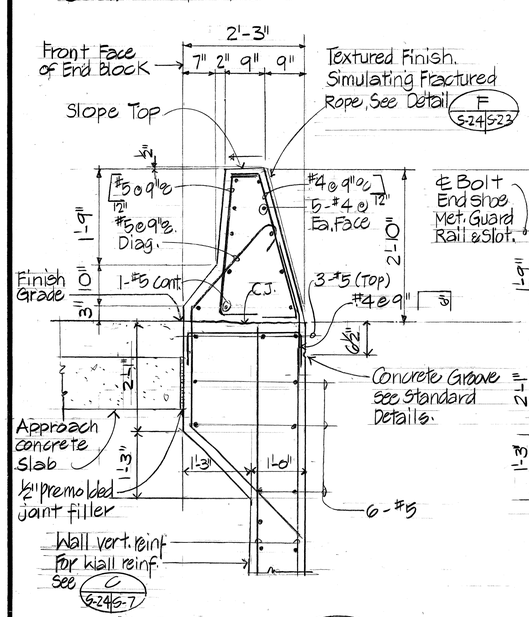

SECTION C S-24 S-24

Scale: 3/4" = 1'-0"

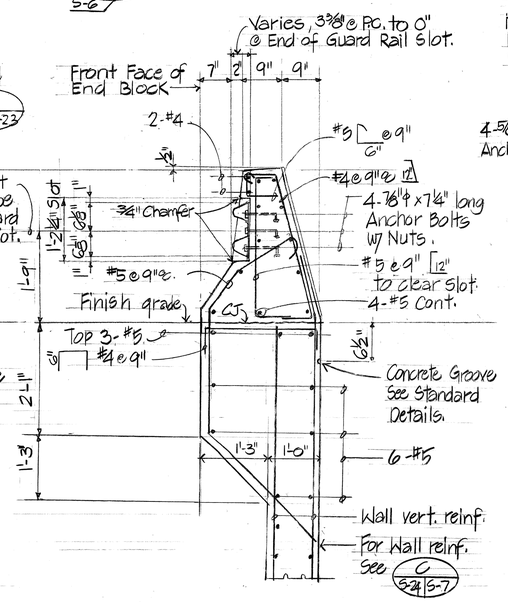

SECTION D S-24 S-24

Scale: 3/4" = 1'-0"

SECTION E S-24 S-24

Scale: 3/4" = 1'-0"

Notes:

1. All Anchor Bolts shall be High Strength Bolts conforming to the Requirements of ASTM A325.
2. All Shoe Assembly, Including Anchor Bolts, Nuts and Washers shall be Galvanized.
3. Special End Shoe shall be fabricated from 10 Gage Steel conforming to the Requirements of AASHTO M180.
4. The first 2-Panels or 25'-0" of Guard Rail adjoining Special End Shoe shall be Galvanized Steel.
5. Anchor Bolt Length given from under Bolt Head.
6. Place Name of Structure as shown. For location, see "Plan" on Contract Drawing. Date shown will be Year Structure is completed. Letter Size and Detail, see Standard Details.
7. Front Face of End Post to match Front Face of Concrete Railing.
8. Embedment of anchor bolts shall be such that a snug fit of the elements and full thread engagement plus ¼" (Maximum) is attained.

HIROH S. OKUBO REGISTERED PROFESSIONAL ENGINEER No. 4320-S HAWAII, U.S.A.

THIS WORK WAS PREPARED BY ME OR UNDER MY SUPERVISION

Myron Okubo

ORIGINAL PLAN	SURVEY PLOTTED BY	DATE
	DRAWN BY	
	TRACED BY	
NOTE BOOK	DESIGNED BY	
No.	QUANTITIES BY	
	CHECKED BY	

DATE	REVISION

STATE OF HAWAII
DEPARTMENT OF TRANSPORTATION
HIGHWAYS DIVISION

END POST DETAILS

SAND ISLAND ROAD WIDENING
2 ND. BRIDGE AND APPROACHES
FEDERAL AID PROJECT NO. F-064-1(2)

SCALE: AS NOTED. DATE: JUN, 1986

SHEET No. S-24 OF 30 SHEETS

FED. ROAD DIST. NO.	STATE	FED. AID PROJ. NO.	FISCAL YEAR	SHEET NO.	TOTAL SHEETS
HAWAII	HAW.	F-064-1(2)	1987	127	151

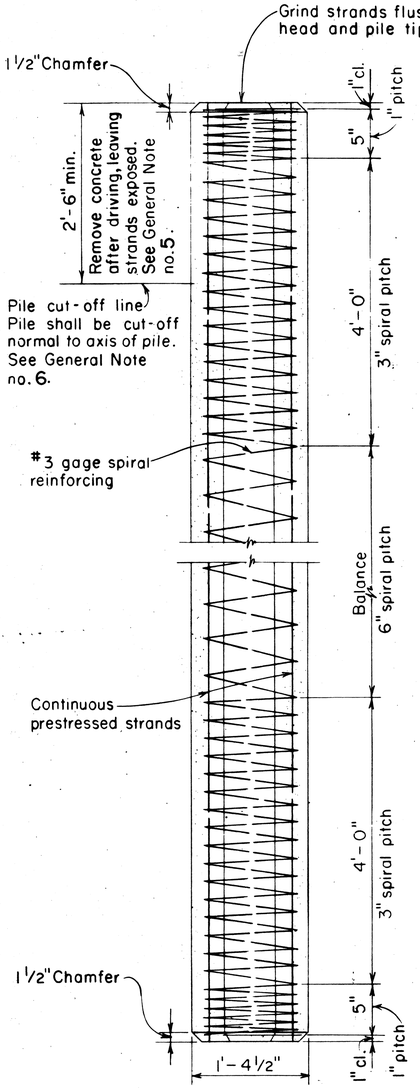

ELEVATION

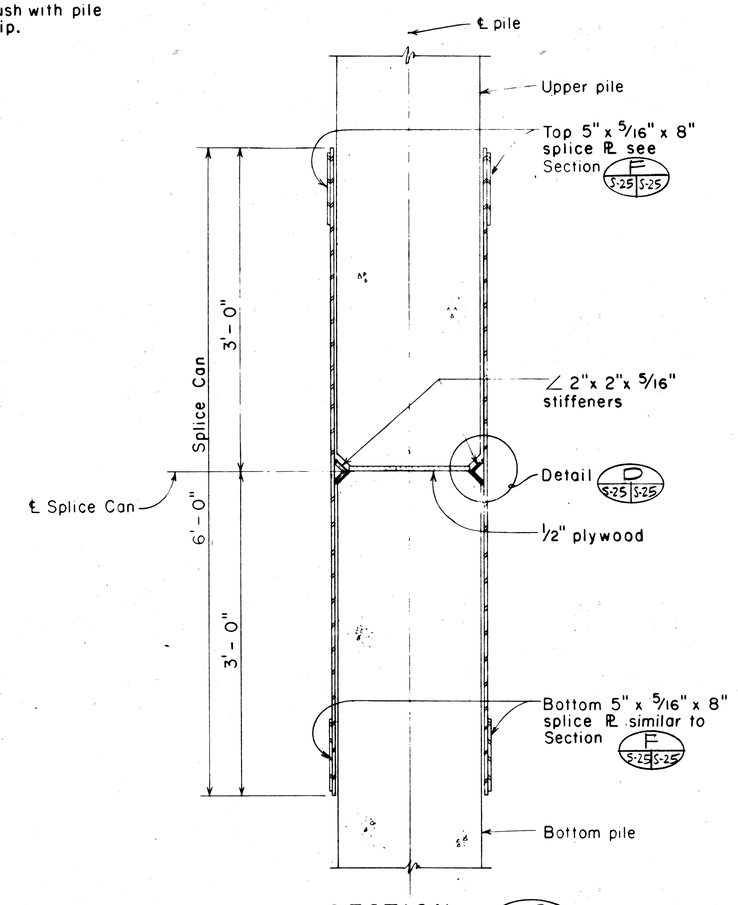

SECTION C
Scale: 1 1/2" = 1'-0" S-25 S-25

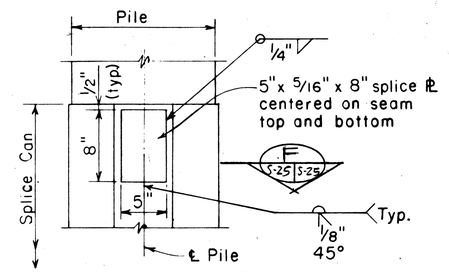

SECTION F
Scale: 1 1/2" = 1'-0" S-25 S-25

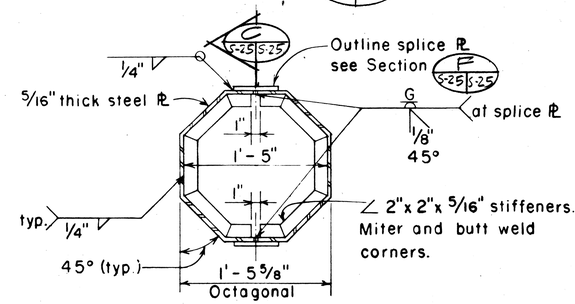

SECTION E
Scale: 1 1/2" = 1'-0" S-25 S-25

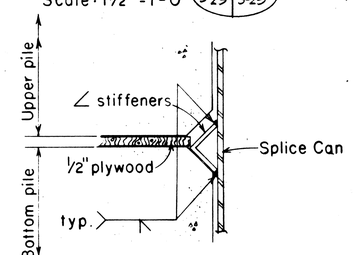

DETAIL D
Scale: 3" = 1'-0" S-25 S-25

TYPICAL PILE SPLICE DETAILS B S-25 S-25

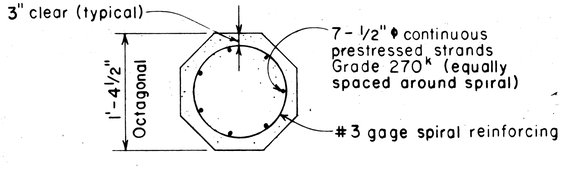

SECTION

16 1/2" PRESTRESSED CONCRETE PILE A S-25 S-25
Not to scale

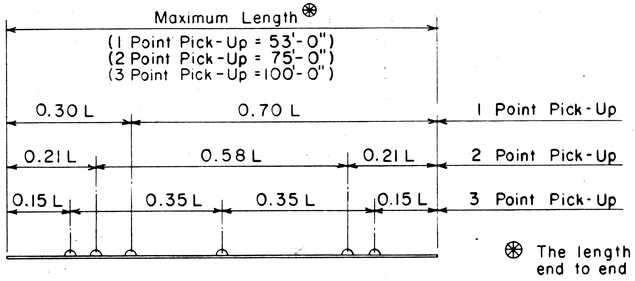

⊛ The length "L" is the distance end to end of pile.

PILE PICK-UP POINTS G S-25 S-25
Not to scale

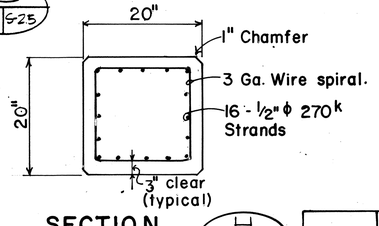

SECTION H
20" SQUARE PRESTRESSED CONCRETE PILE S-25 S-25
Scale: 1" = 1'-0"

GENERAL NOTES

1. Concrete strengths:
   a. Typical pile: 28 day compressive strength f'_c = 5000 psi.
   b. Pile build-up with driving: 28 day compressive strength f'_c = 5000 psi.
   c. Pile build-up without driving: Identical 28 day f'_c as footing or pile cap.
2. Reinforcing steel shall conform to the following ASTM specifications:
   a. Bar reinforcement: ASTM A615 Grade 40
   b. Spiral reinforcement: ASTM A82
   c. Prestressing strand: ASTM A416 Grade 270
3. Splice can:
   a. Structural steel shall conform to ASTM A36
   b. All welding shall meet the requirements of Section 501 of the Standard Specification.
   c. No measurement for payment shall be made for the splice can as it shall be considered incidental to the driving of the pile.
4. Piles accepted by the Engineer shall be of sound concrete. Damaged piles shall be replaced or repaired by the Contractor at his expense as directed by the Engineer.
5. Work of cutting off prestress concrete piles or concrete pile build-ups shall be performed in such a manner as to avoid spalling or damaging the pile below cut-off. Damaged portions shall be removed and pile cut-off elevation lowered as required by the Engineer.
6. Top of pile at cut-off line shall be prepared as required for construction joints in Section 503 of the Standard Specifications.
7. Pile splice shall not be permitted except for pile length in excess of 100 feet unless otherwise approved by Engineer.
8. The in-place length of pile above the splice shall be approximately 50% of the total length of pile driven, unless location of splice is indicated in the plans or specifications.
9. Build-ups may be driven after the concrete attains a compressive strength of 4000 psi., but not earlier than 7 days after the concrete is poured. Use of pile build-up is not permitted at Footings for Piers 1, 2, 3 and 4.
10. Pile splice shall not be permitted at Foundations for Piers 1, 2, 3 and 4.
11. The minimun working force in the Prestressing steel shall be 165 kips for 16 1/2" Prestressed Concrete Piles and 375 kips for 20" Square Prestressed Concrete Piles.
12. Should the Contractor elect to drive piles with a follower, details (size, length, weight, material, etc.) of the follower to be used shall be submitted to the Engineer for approval.

MYRON G. OKUBO REGISTERED PROFESSIONAL ENGINEER No. 4376-S HAWAII, U.S.A.

THIS WORK WAS PREPARED BY ME OR UNDER MY SUPERVISION

Myron Okubo

ORIGINAL PLAN	SURVEY PLOTTED BY	DATE
	DRAWN BY	
NOTE BOOK	TRACED BY	
	DESIGNED BY	
No.	QUANTITIES BY	
	CHECKED BY	

DATE	REVISION

STATE OF HAWAII
DEPARTMENT OF TRANSPORTATION
HIGHWAYS DIVISION

PRESTRESSED CONCRETE PILES—DETAILS

SAND ISLAND ROAD WIDENING
2ND. BRIDGE AND APPROACHES
FEDERAL AID PROJECT NO. F-064-1(2)

Scale: As Noted Date: JUN, 1986

SHEET No. S-25 OF 30 SHEETS

FED. ROAD DIST. NO.	STATE	FED. AID PROJ. NO.	FISCAL YEAR	SHEET NO.	TOTAL SHEETS
HAWAII	HAW.	F-064-1(2)	1987	128	151

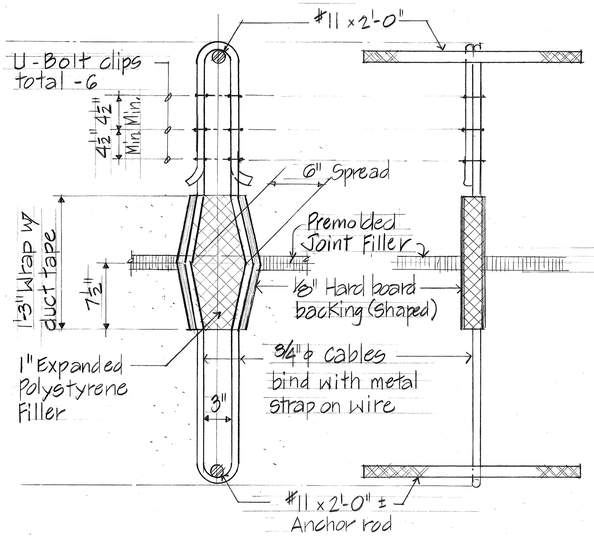

ELEVATION SECTION

VERTICAL RESTRAINER TYPICAL DETAIL (A) S-8 S-26 S-16

Not to scale:

Notes:

1. Restrainer Assemblage shall be securely held in place while placing concrete.
2. Restrainer Assemblage shall be considered Incidental to Concrete in Bridge.

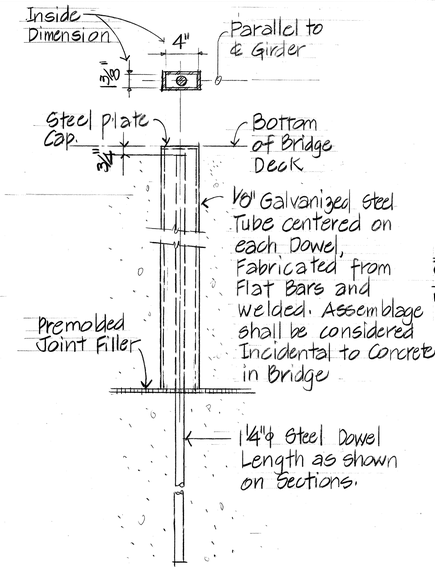

SECTION

1¼"ϕ STEEL DOWEL DETAIL (B) S-8 S-26 S-16

Not to Scale:

Notes:

1. At Expansion Joints, Tubes shall be filled with Tar or Mastic. Tubes shall be filled prior to pouring Deck Concrete.
2. Tubes shall be capped by welding on a 1/8" Steel Plate after inspection following End Diaphragm pour and prior to deck pour.
3. At Hinge Joints steel Tube shall be omitted, and ½" premolded joint filler attached at ends of dowel.

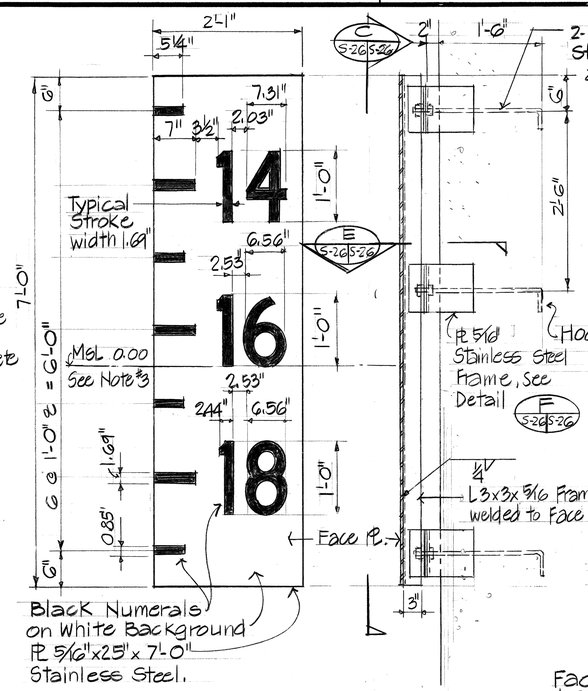

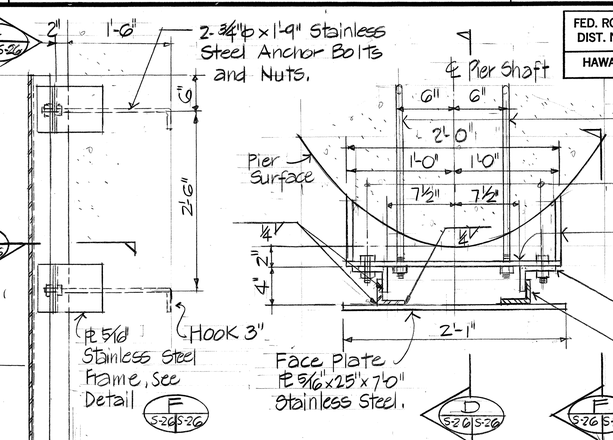

PLAN - SECTION (E) S-26 S-26

Scale: 1½"=1'-0"

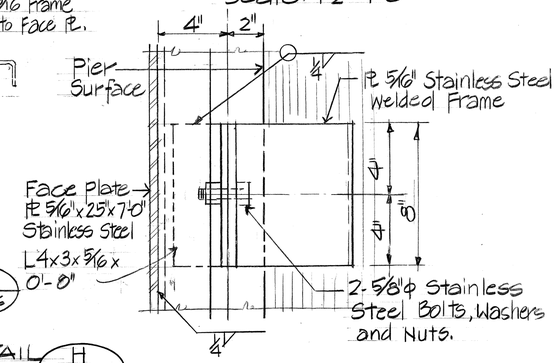

DETAIL (F) S-26 S-26

Scale: 3"=1'-0"

FRONT ELEVATION (C) S-26 S-26

Scale: 1½"=1'-0"

SIDE SECTION (D) S-26 S-26

Scale: 1½"=1'-0"

CLEARANCE GAUGE - SIGN DETAIL (H) S-3 S-26

1. All Stainless Steel Items to be Type 316.
2. Numerals shown detailed per "Standard Alphabets For Highways Signs", U.S. Dept. of Transportation, Fed. Highway Administration. Series "C".
3. Place Clearance Gauge so that El. = 0.00 MSL. Aligns with 16.50 Mark on gauge.
4. The Clearance Gauge shall be painted to conform to SSPC-PS 4.01, Four Coat Vinyl Painting System with Red Lead Primer.
5. Clearance Gauge shall be consider incidental to Concrete in Bridge.

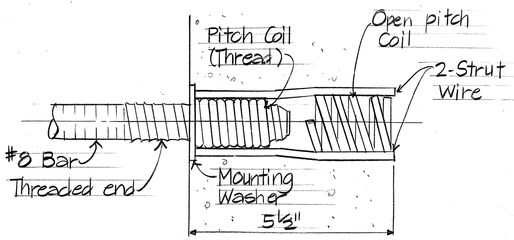

Inserts to develop Minimum ultimate pullout value of 24 Kips.
Inserts shall be considered incidental to concrete Bridge.

INSERT DETAIL (G) S-8 S-26 S-19, S-18, S-17, S-16

N.T.S.

THIS WORK WAS PREPARED BY ME OR UNDER MY SUPERVISION

Myron Okubo

MYRON G. OKUBO REGISTERED PROFESSIONAL ENGINEER No. 5220-S HAWAII, U.S.A.

DATE	REVISION

STATE OF HAWAII
DEPARTMENT OF TRANSPORTATION
LAND TRANSPORTATION FACILITIES DIVISION

MISCELLANEOUS DETAILS

SAND ISLAND ROAD WIDENING
2ND. BRIDGE AND APPROACHES
FEDERAL AID PROJECT NO. F-064-1(2)

SCALE: AS NOTED DATE: JUN, 1986

SHEET No. S-26 OF 30 SHEETS

ORIGINAL PLAN | SURVEY PLOTTED BY | DRAWN BY | TRACED BY | DATE | NOTE BOOK | DESIGNED BY | QUANTITIES BY | CHECKED BY | No.

FED. ROAD DIST. NO.	STATE	FED. AID PROJ. NO.	FISCAL YEAR	SHEET NO.	TOTAL SHEETS
HAWAII	HAW.	F-064-1 (2)	1987	129	151

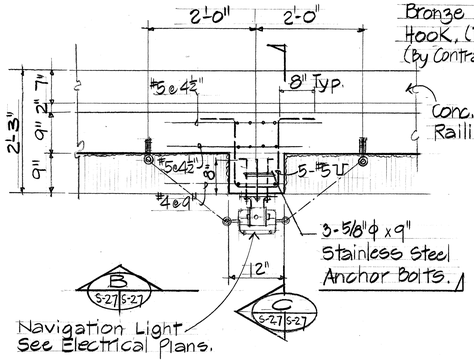

TOP • PLAN
Scale: 3/4" = 1'-0"

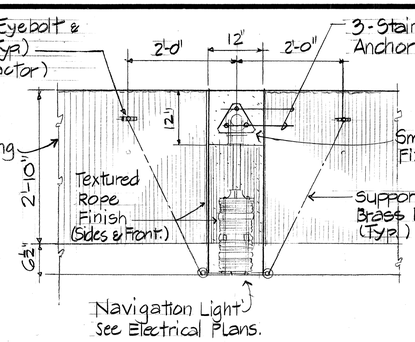

FRONT ELEVATION
Scale: 3/4" = 1'-0"
B S-27 S-27

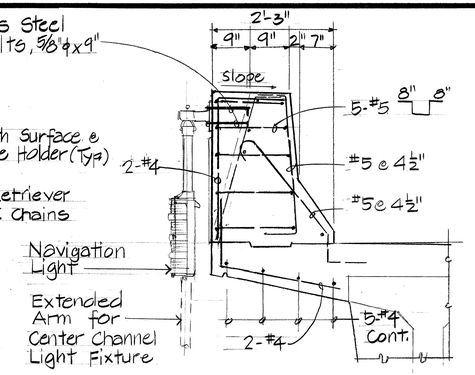

SECTION
Scale: 3/4" = 1'-0"
C S-27 S-27

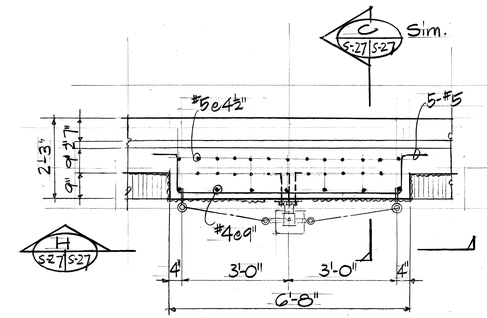

TOP • PLAN
CENTER CHANNEL LIGHT
MOUNTING DETAIL
Scale: ½" = 1'-0"
G S-3 S-27

Notes:

1. See Electrical Plans for all Electrical Conduits, Wiring, Junction Box, and Other Attachments.
2. For Navigation Lights, Center Channel Lights, See Electrical Plans.
3. Anchor Bolts shown on Details shall be verified to conform to Manufacturer's Requirements.
4. Anchor Bolts to be placed accurately with the use of a Template.
5. Anchor Bolts to be Stainless Steel Type 316.

NAVIGATION LIGHT
MOUNTING DETAIL
A S-3 S-27

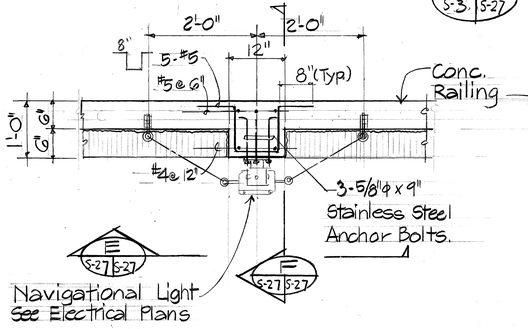

TOP • PLAN

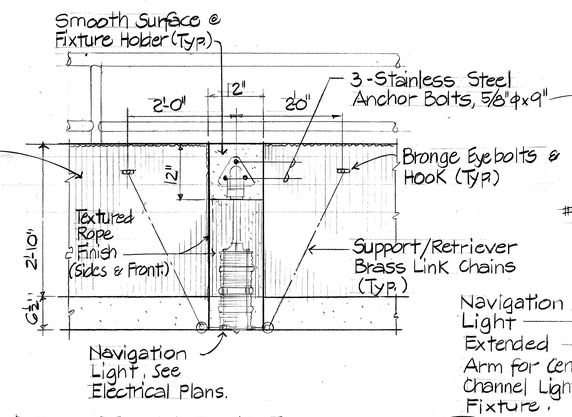

FRONT ELEVATION
Scale: 3/4" = 1'-0"
E S-27 S-27

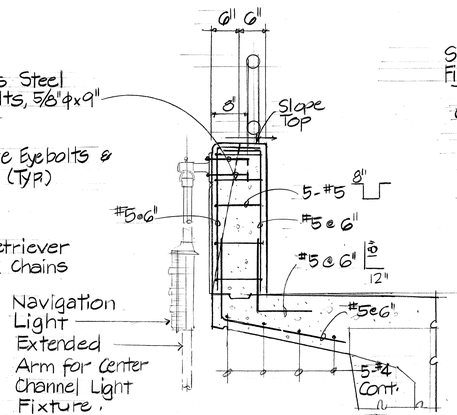

SECTION
Scale: 3/4" = 1'-0"
F S-27 S-27

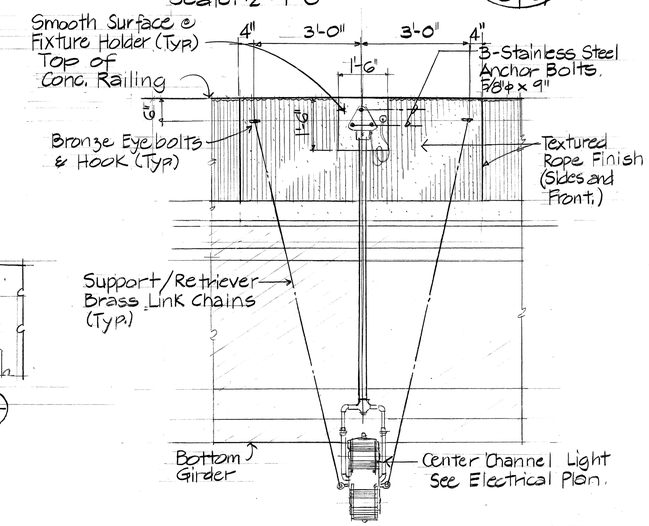

FRONT ELEVATION
Scale: ½" = 1'-0"
H S-27 S-27

TOP • PLAN
NAVIGATION LIGHT
MOUNTING DETAIL
Scale: 3/4" = 1'-0"
D S-3 S-27

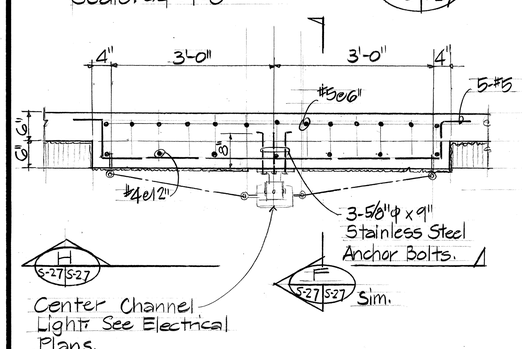

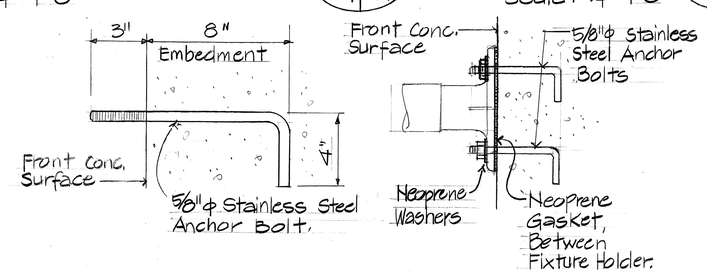

ANCHOR BOLT DETAILS
N.T.S.
L S-27 S-27

TOP • PLAN
CENTER CHANNEL LIGHT
MOUNTING DETAIL
Scale: 3/4" = 1'-0"
K S-3 S-27

ORIGINAL PLAN	SURVEY PLOTTED BY	DATE
	DRAWN BY	
	TRACED BY	
NOTE BOOK	DESIGNED BY	
	QUANTITIES BY	
No.	CHECKED BY	

MYRON G. OKUBO REGISTERED PROFESSIONAL ENGINEER No. 4220-S HAWAII, U.S.A.

THIS WORK WAS PREPARED BY ME OR UNDER MY SUPERVISION

Myron Okubo

DATE	REVISION

STATE OF HAWAII
DEPARTMENT OF TRANSPORTATION
HIGHWAYS DIVISION

NAVIGATION LIGHTING DETAILS.

SAND ISLAND ROAD WIDENING
2ND BRIDGE AND APPROACHES
FEDERAL AID PROJECT NO. F-064-1(2)

SCALE: AS NOTED. DATE: JUN, 1986

SHEET No. S-27 OF 30 SHEETS

FED. ROAD DIST. NO.	STATE	FED. AID PROJ. NO.	FISCAL YEAR	SHEET NO.	TOTAL SHEETS
HAWAII	HAW.	F-064-1(2)	1987	130	151

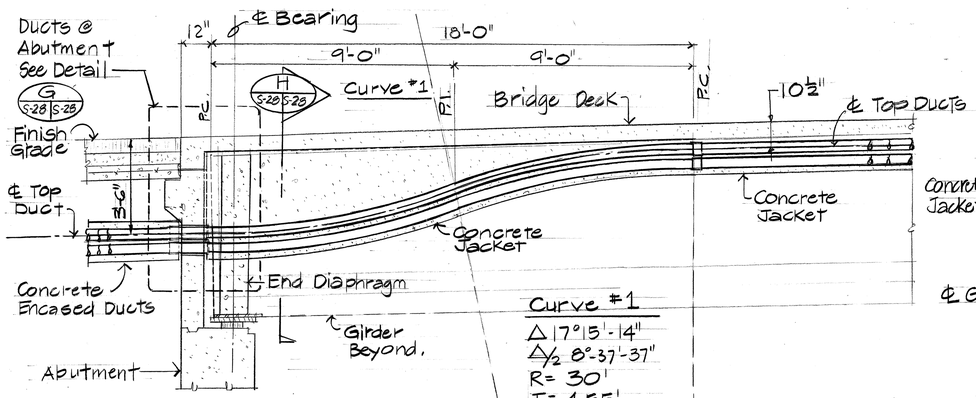

Curve #1
Δ 17°15'-14"
Δ/2 8°-37'-37"
R= 30'
T= 4.55'
Ch= 9'
Lc= 9.03'
Note: Reverse Curve

DUCT PROFILE AT ABUTMENT SECTION A S-28 S-28
Scale: 3/8"=1'-0"

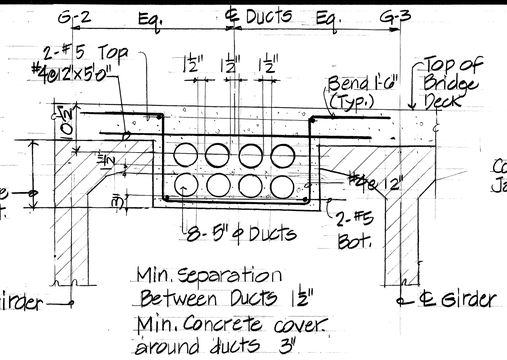

Min. Separation Between Ducts 1½"
Min. Concrete cover around ducts 3"

8 WAY ELECTRIC DUCT DETAIL B S-18 S-28
Scale: 3/4"=1'-0"

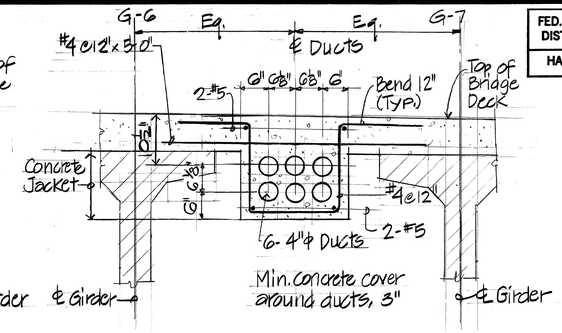

Min. concrete cover around ducts, 3"

6 WAY TELEPHONE DUCT DETAIL C S-18 S-28
Scale: 3/4"=1'-0"

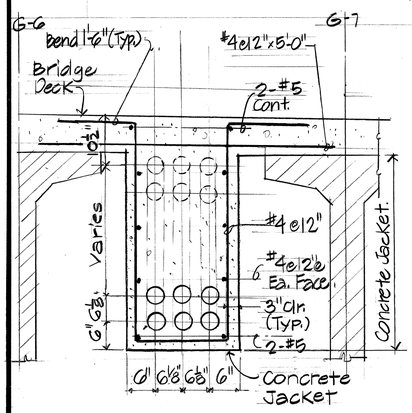

DUCT SECTION H S-28 S-28
Scale: 3/4"=1'-0"
(8-WAY DUCT SECTON SIMILAR)

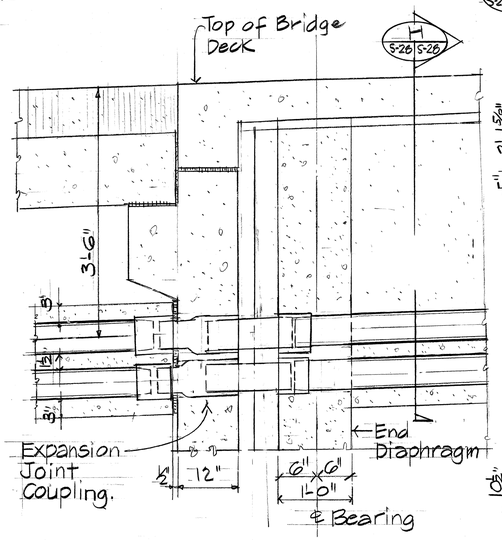

TYPICAL DUCT CONNECTORS AT ABUTMENT DETAIL G S-28 S-28
Scale: 1"=1'-0"

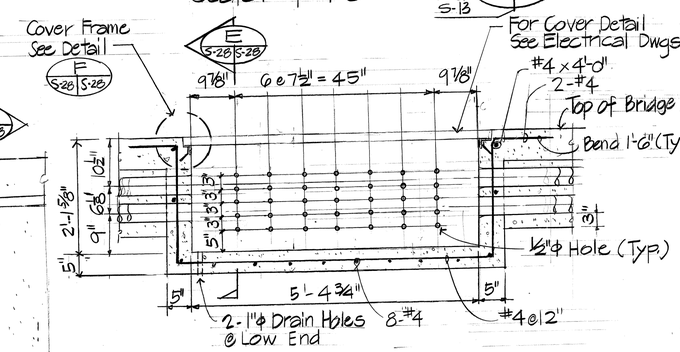

TELEPHONE PULL BOX LONGITUDINAL SECTION D S-28 S-28
Scale: 3/4"=1'-0"

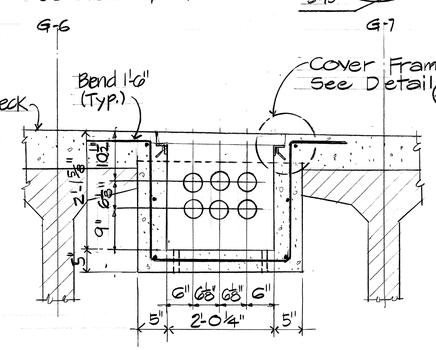

SECTION E S-28 S-28
Scale: 3/4"=1'-0"

Note: See Elec. Snts. for arrangement of ducts for pull boxes @ Sta. 60+50 and Sta. 61+35.

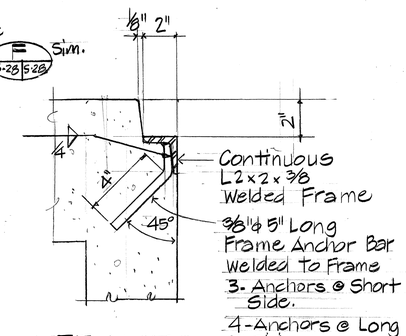

FRAME DETAIL F S-28 S-28
Scale: 3"=1'-0"

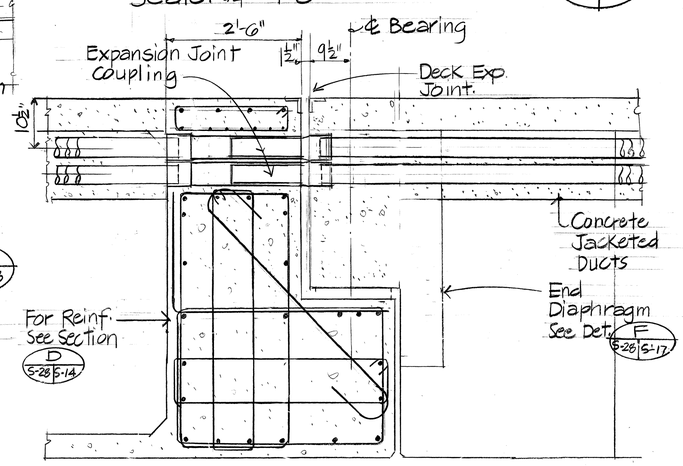

TYPICAL DUCT CONNECTORS AT PIER END BEAM DETAIL J S-28 S-28
Scale: 3/4"=1'-0"

APPROVED:
HAWAIIAN ELECTRIC CO. INC. — DATE 6-7-86
APPROVED:
HAWAIIAN TELEPHONE CO. — DATE 6/6/86

HYRON G. OKUBO REGISTERED PROFESSIONAL ENGINEER No. 4220-S HAWAII, U.S.A.
THIS WORK WAS PREPARED BY ME OR UNDER MY SUPERVISION
Myron Okubo

DATE	REVISION

STATE OF HAWAII
DEPARTMENT OF TRANSPORTATION
HIGHWAYS DIVISION

ELECTRIC AND TELEPHONE DETAILS.

SAND ISLAND ROAD WIDENING
2ND. BRIDGE AND APPROACHES
FEDERAL AID PROJECT NO. F-064-1(2)

SCALE: AS NOTED. DATE: JUN, 1986
SHEET NO. S-28 OF 30 SHEETS

ORIGINAL PLAN | NOTE BOOK No. | SURVEY PLOTTED BY | DRAWN BY | TRACED BY | DESIGNED BY | QUANTITIES BY | CHECKED BY | DATE

FED. ROAD DIST. NO.	STATE	FED. AID PROJ. NO.	FISCAL YEAR	SHEET NO.	TOTAL SHEETS
HAWAII	HAW.	F-064-1(2)	1987	131	151

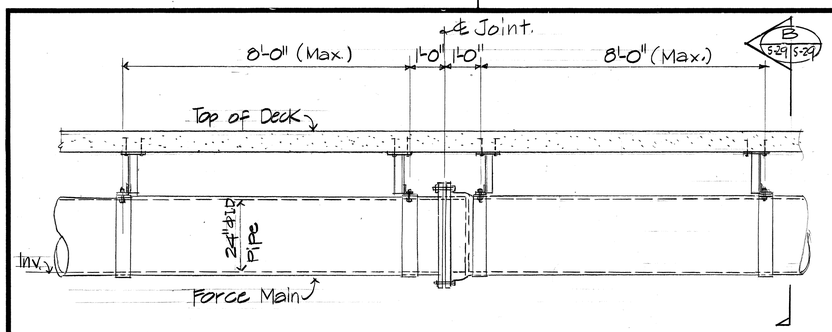

F.M. PIPE HANGER - ELEVATION (A S-29 S-29)

Scale: 1/2" = 1'-0"

Note: All Bolts, Washers, Nuts, PL's, Shapes shall be Type 316 Stainless steel.

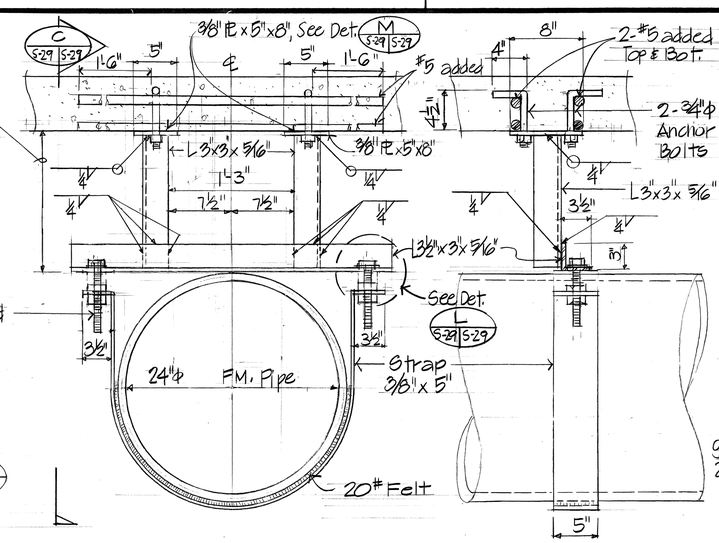

SECTION B (S-29 S-29)

Scale: 1 1/2" = 1'-0"

SECTION C (S-29 S-29)

Scale: 1 1/2" = 1'-0"

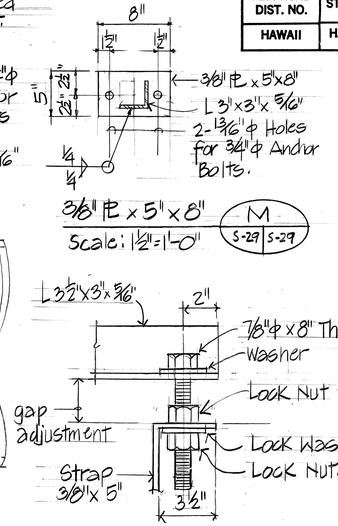

DETAIL L (S-29 S-29)

N.T.S.

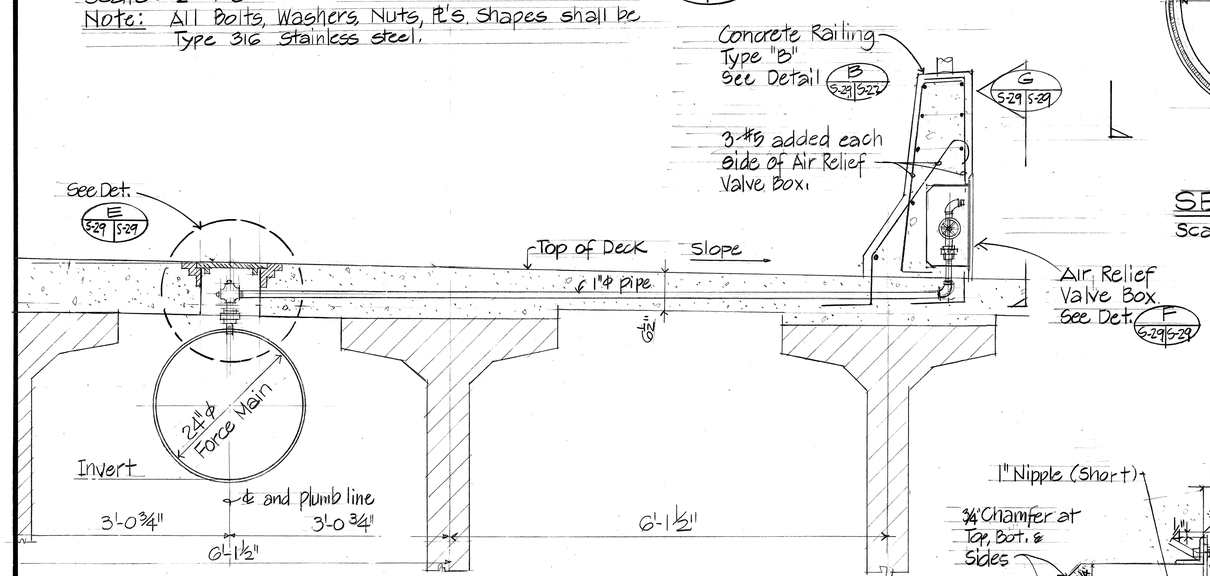

24"φ FORCE MAIN W/ AIR RELIEF VALVE (D S-29 S-29)

Scale: 1" = 1'-0" (AT STA. 61+50)

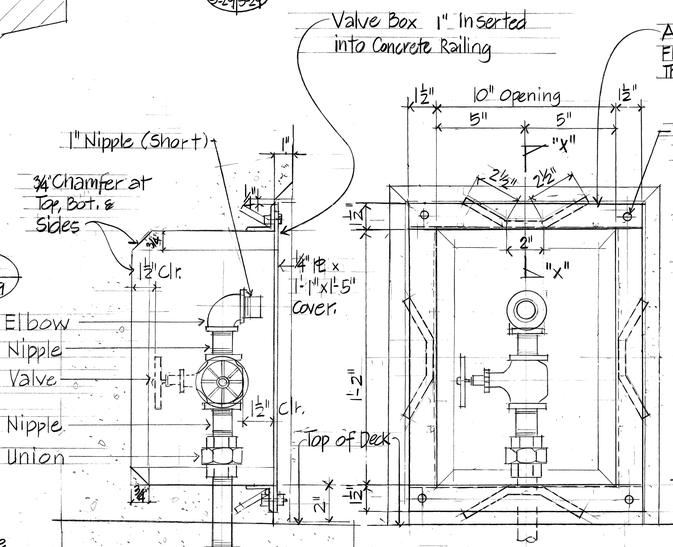

DETAIL F (S-29 S-29)

Scale: 3" = 1'-0"

SECTION G (S-29 S-29)

Scale: 3" = 1'-0"

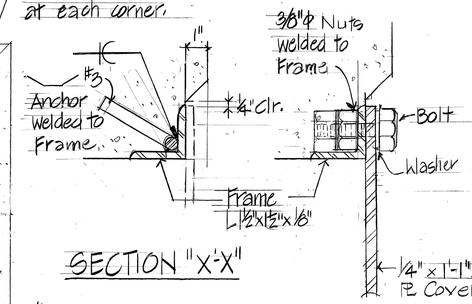

SECTION "X-X"

#3 ANCHORS (H S-29 S-29)

N.T.S.

3/8"φ BOLT DETAIL (J S-29 S-29)

N.T.S.

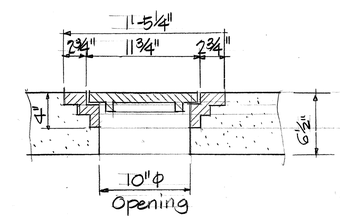

COVER & FRAME - A.R.V. HANDHOLE DET (K S-29 S-29)

N.T.S.

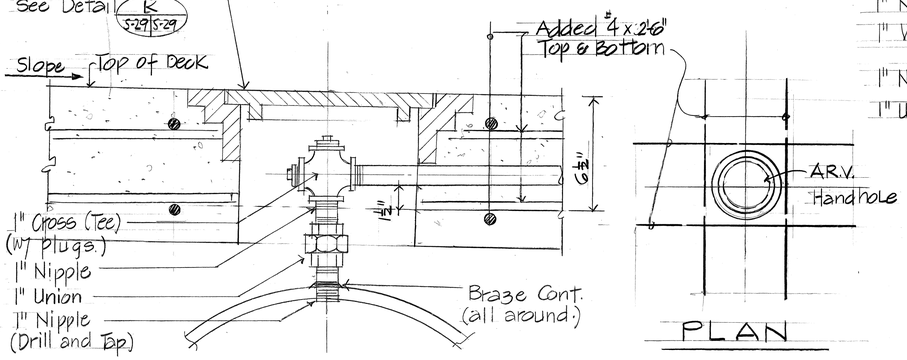

DETAIL E (S-29 S-29)

Scale: 3" = 1'-0"

PLAN

ORIGINAL PLAN		DATE
	SURVEY PLOTTED BY	
	DRAWN BY	
	TRACED BY	
NOTE BOOK	DESIGNED BY	
	QUANTITIES BY	
No.	CHECKED BY	

MYRON G. OKUBO REGISTERED PROFESSIONAL ENGINEER No. 4320-S HAWAII, U.S.A.

THIS WORK WAS PREPARED BY ME OR UNDER MY SUPERVISION

Myron Okubo

DATE	REVISION

STATE OF HAWAII
DEPARTMENT OF TRANSPORTATION
HIGHWAYS DIVISION

FORCE MAIN DETAILS

SAND ISLAND ROAD WIDENING
2ND. BRIDGE AND APPROACHES
FEDERAL AID PROJECT NO. F-064-1(2)

SCALE: AS NOTED DATE: JUN, 1986

SHEET No. S-29 OF 30 SHEETS

FED. ROAD DIST. NO.	STATE	FED. AID PROJ. NO.	FISCAL YEAR	SHEET NO.	TOTAL SHEETS
HAWAII	HAW.	F-064-1(2)	1987	132	151

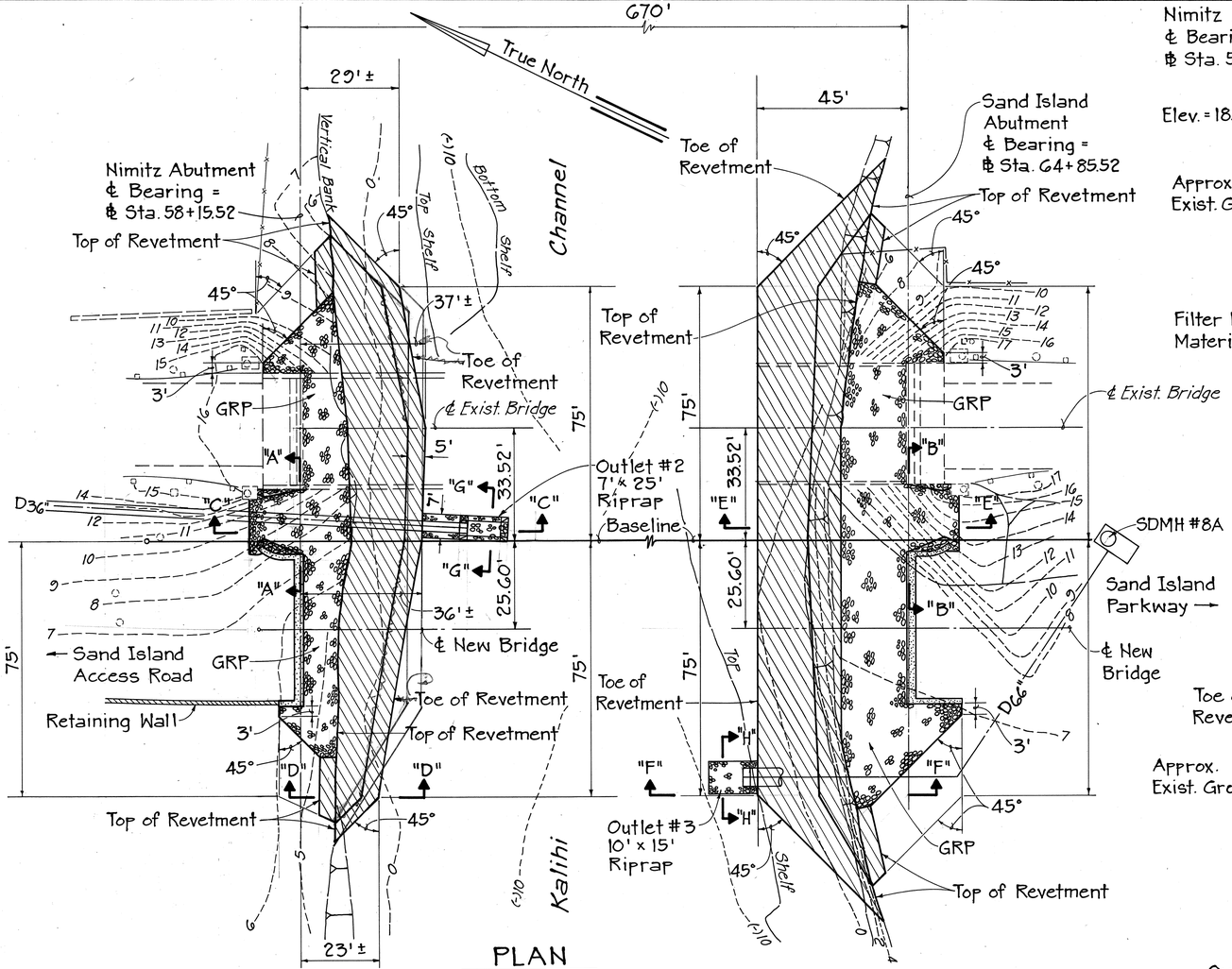

PLAN
Scale: 1" = 20'

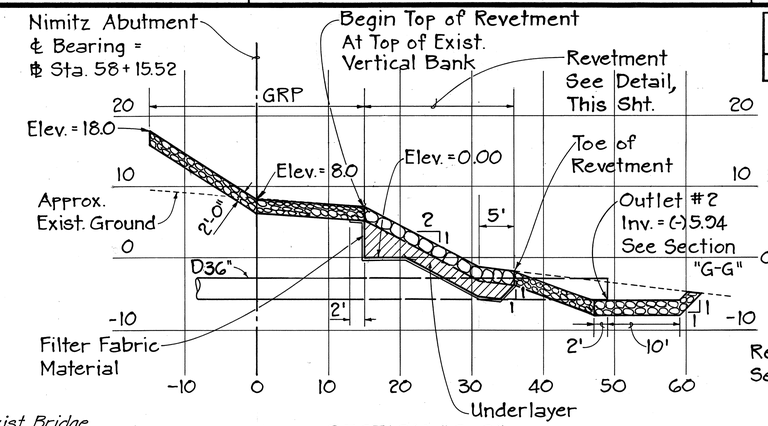

SECTION "C-C"
Scale: 1" = 10'

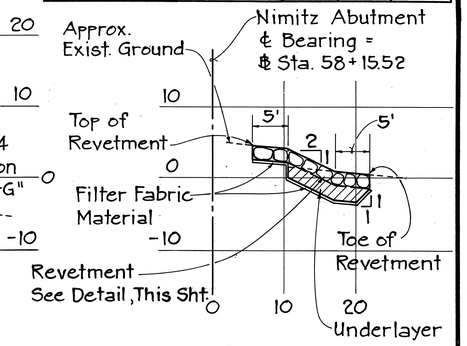

SECTION "D-D"
Scale: 1" = 10'

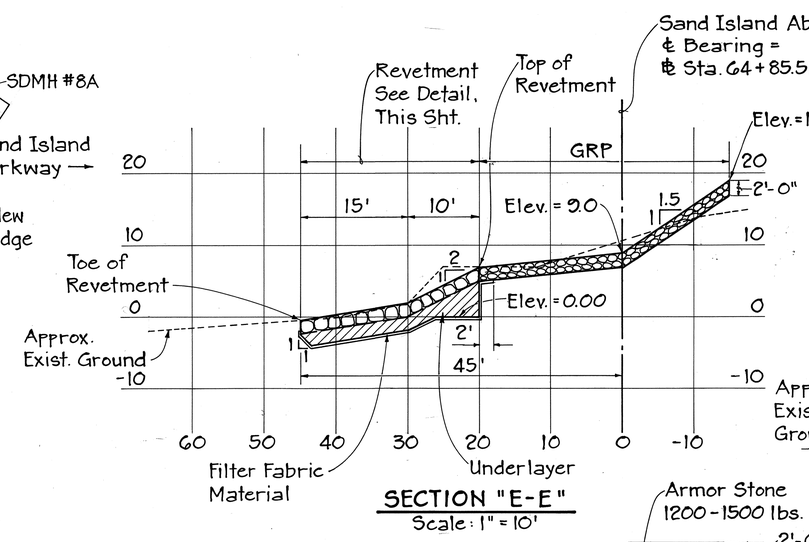

SECTION "E-E"
Scale: 1" = 10'

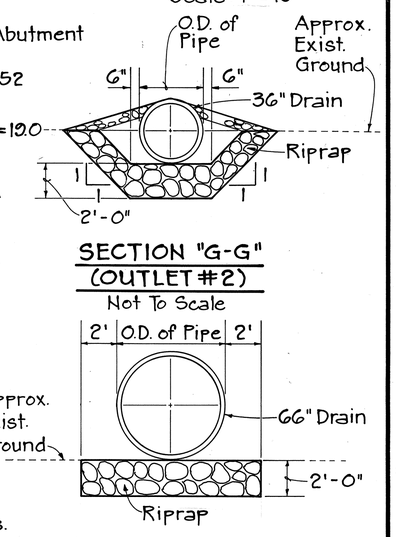

SECTION "G-G" (OUTLET #2)
Not To Scale

SECTION "H-H" (OUTLET #3)
Not To Scale

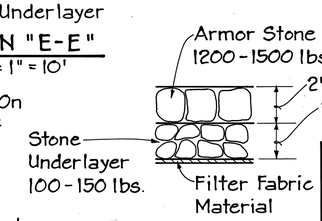

REVETMENT DETAIL
Not To Scale

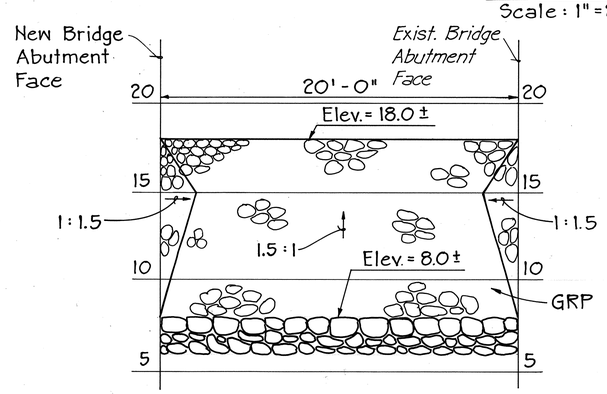

SECTION "A-A"
Scale: 1/4" = 1'-0"

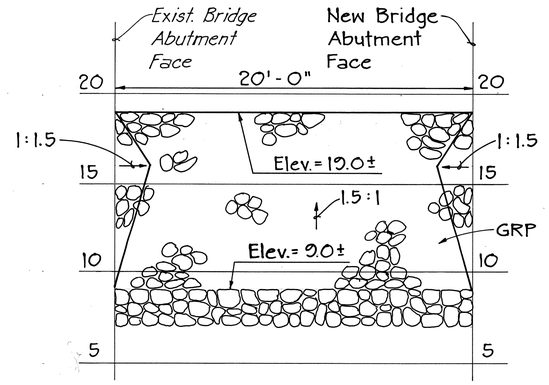

SECTION "B-B"
Scale: 1/4" = 1'-0"

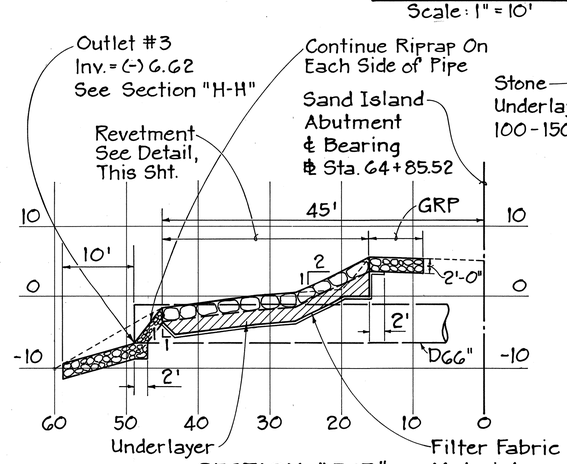

SECTION "F-F"
Scale: 1" = 10'

DATE	REVISION

STATE OF HAWAII
DEPARTMENT OF TRANSPORTATION
HIGHWAYS DIVISION

REVETMENT DETAILS

SAND ISLAND ROAD WIDENING
2ND BRIDGE AND APPROACHES
FEDERAL AID PROJECT NO. F-064-1(2)

MYRON G. OKUBO REGISTERED PROFESSIONAL ENGINEER No. 4320-S HAWAII, U.S.A.

THIS WORK WAS PREPARED BY ME OR UNDER MY SUPERVISION

Myron Okubo

SCALE: AS NOTED DATE: JUN, 1986

SHEET No. 5-30 OF 30 SHEETS

ORIGINAL PLAN	SURVEY PLOTTED BY	DATE
	DRAWN BY	
	TRACED BY	
NOTE BOOK	DESIGNED BY	
No.	QUANTITIES BY	
	CHECKED BY	

"AS-BUILT"

FED. ROAD DIST. NO.	STATE	FED. AID PROJ. NO.	FISCAL YEAR	SHEET NO.	TOTAL SHEETS
HAWAII	HAW.	BR-F-064-1(2)	1987	132 A	151

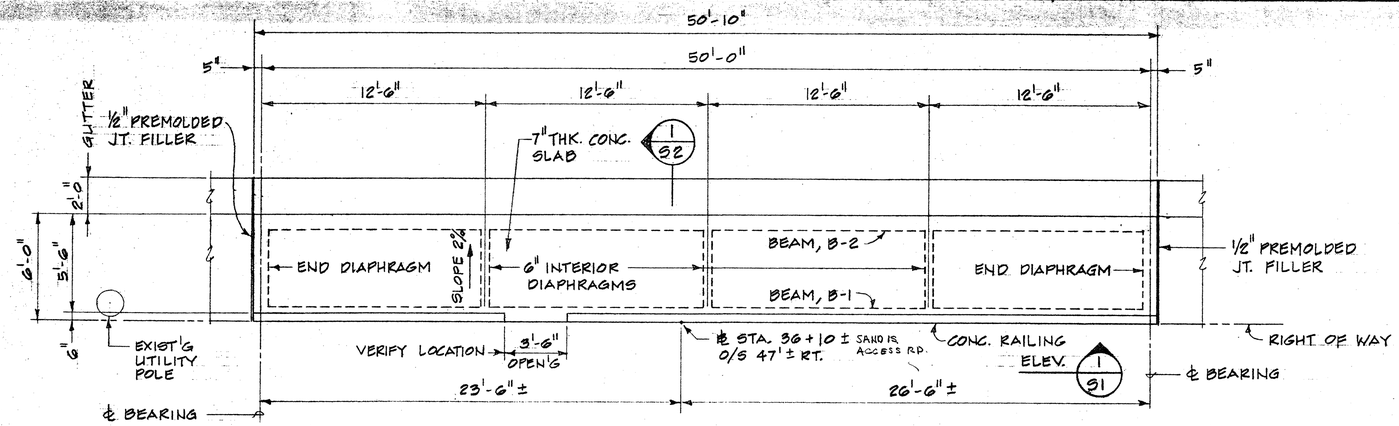

PLAN

SCALE: 1/4" = 1'-0"

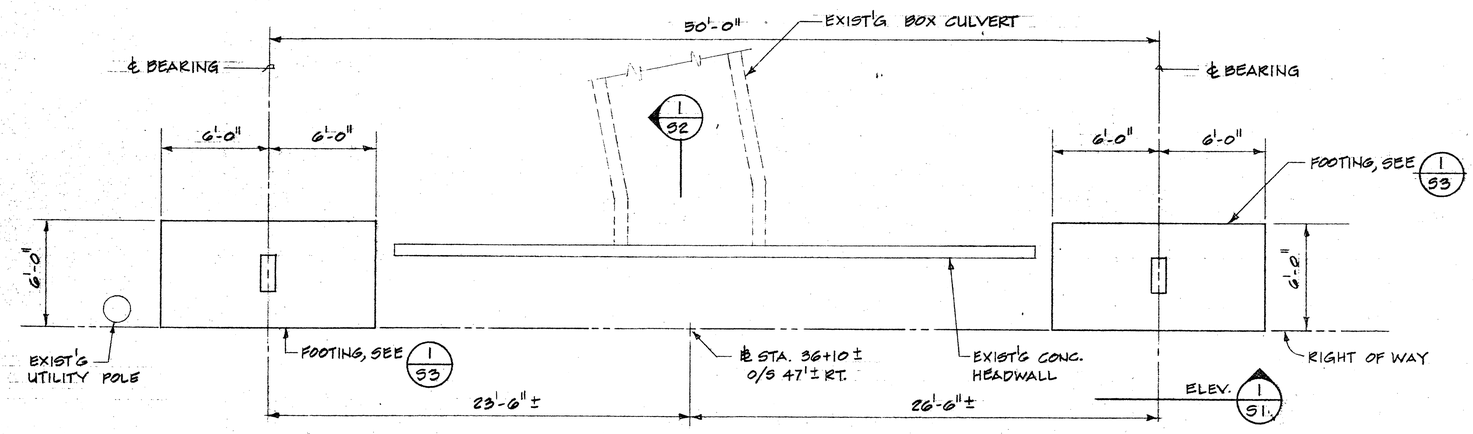

FOUNDATION PLAN

SCALE: 1/4" = 1'-0"

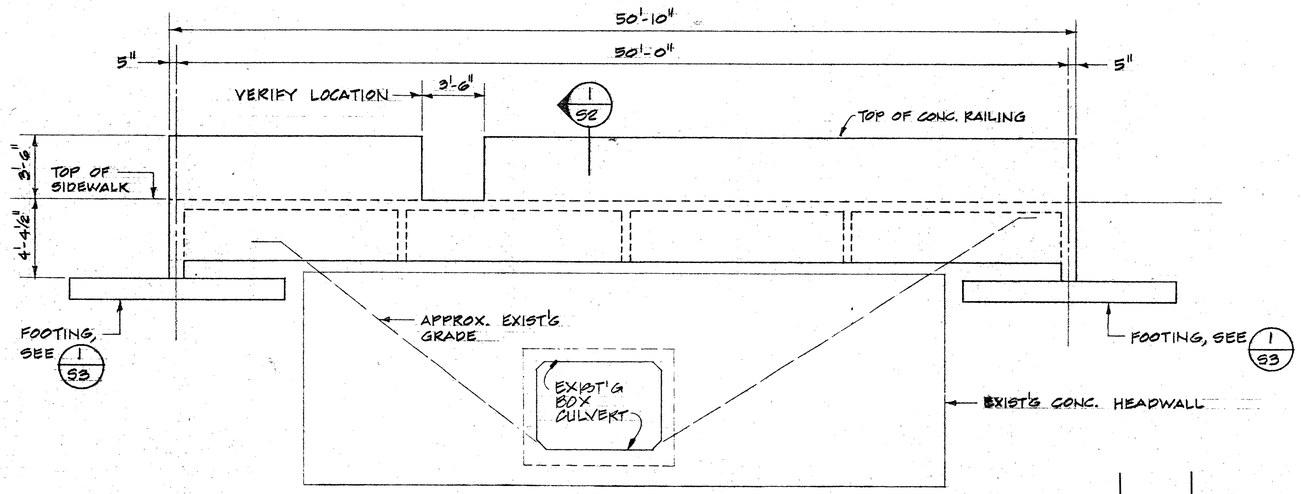

1/51 ELEVATION

SCALE: 1/4" = 1'-0"

DATE	REVISION
9/7/89	Added new sheets to the original contract plans.

DESIGN DATA:

1. SIDEWALK LIVE LOADS:
   a. UNIFORM LOAD: 85 PSF
   b. TRUCK LOAD: HS-20-44
2. WIND PRESSURE: 50 PSF
3. SEISMIC ZONE 2: A = 0.09g, F = 1.0, C = 0.08
4. EARTH LATERAL (EQUIVALENT FLUID) PRESSURES AND COEFFICIENT:
   a. ACTIVE: 40 PCF (Ka = 0.33)
   b. PASSIVE: 200 PCF
   c. COEFFICIENT OF FRICTION: 0.5
5. ALLOWABLE SOIL BEARING PRESSURES:
   a. NET AVERAGE PRESSURE: 1,000 PSF
   b. NET TOE PRESSURE: 1,300 PSF

GENERAL NOTES:

1. MATERIALS:
   a. CONCRETE MINIMUM COMPRESSIVE STRENGTH AT 28 DAYS SHALL BE 4,000 PSI.
   b. REINFORCING STEEL: ASTM A615, DEFORMED BARS
      #4 AND SMALLER: Fy = 40 KSI (MIN.)
      #5 AND LARGER: Fy = 60 KSI
   c. ELASTOMERIC BEARING PADS: HARDNESS, 60 ± 5 DUROMETER; MIN. TENSILE STRENGTH, 2,500 PSI.
2. THE CONTRACTOR SHALL VERIFY ALL DIMENSIONS, ELEVATIONS AND LOCATION OF EXISTING AND NEW WORK PRIOR TO FABRICATION AND CONSTRUCTION.
3. ALL REINFORCING STEEL MARKED CONTINUOUS (CONT.) SHALL BE LAPPED AT ALL SPLICES AND CORNERS 40 BAR DIAMETERS, UNLESS NOTED OTHERWISE.
4. ALL CONCRETE WORK SHALL BE IN ACCORDANCE WITH ACI MANUAL OF CONCRETE PRACTICE, LATEST EDITION.
5. WELDING OF REINFORCING STEEL SHALL BE IN ACCORDANCE WITH AWS D1.4, LATEST EDITION.
6. EDGES OF ALL EXPOSED CORNERS SHALL BE CHAMFERED 3/4" x 3/4".
7. UNLESS INDICATED OTHERWISE, ALL WORK SHALL BE IN ACCORDANCE WITH THE STATE OF HAWAII, DEPT. OF TRANSPORTATION, HIGHWAYS DIV., PROJECT "SAND ISLAND ROAD WIDENING, 2ND BRIDGE AND APPROACHES, FEDERAL AID PROJECT NO. F-064-1(2)".

ALVIN Y. S. ZANE REGISTERED PROFESSIONAL ENGINEER No. 1335-S HAWAII, U.S.A.

THIS WORK WAS PREPARED BY ME OR UNDER MY SUPERVISION.

ALVIN ZANE & ASSOC.
CIVIL & STRUCTURAL ENGINEERS
FIRST INTERSTATE BANK BLDG.
1314 S. KING ST. SUITE 964
HONOLULU, HAWAII 96814
TELEPHONE 524-3473

CONTRACTOR: KIEWIT PACIFIC CO.
2828 PAA STREET, SUITE 3060
HONOLULU, HI 96819

SAND ISLAND ROAD WIDENING
SIDEWALK BRIDGE AT STA. 36+10±

PLANS, ELEVATION & GEN. NOTES

SHEET S-1 OF 5 SHEETS
JOB NO. 85-21
DATE: 6/12/89

132 A

FED. ROAD DIST. NO.	STATE	FED. AID PROJ. NO.	FISCAL YEAR	SHEET NO.	TOTAL SHEETS
HAWAII	HAW.	BR-F-064-1(2)	1987	132 B	151

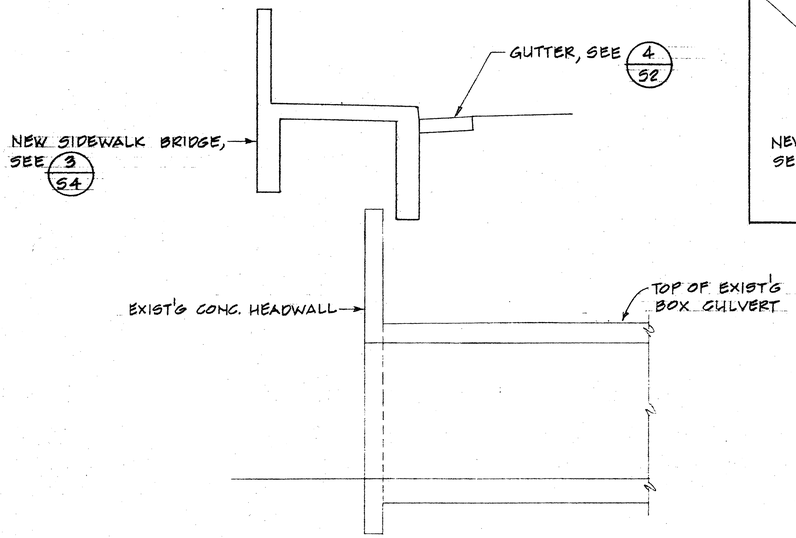

1/S2 SECTION
SCALE: 3/8" = 1'-0"

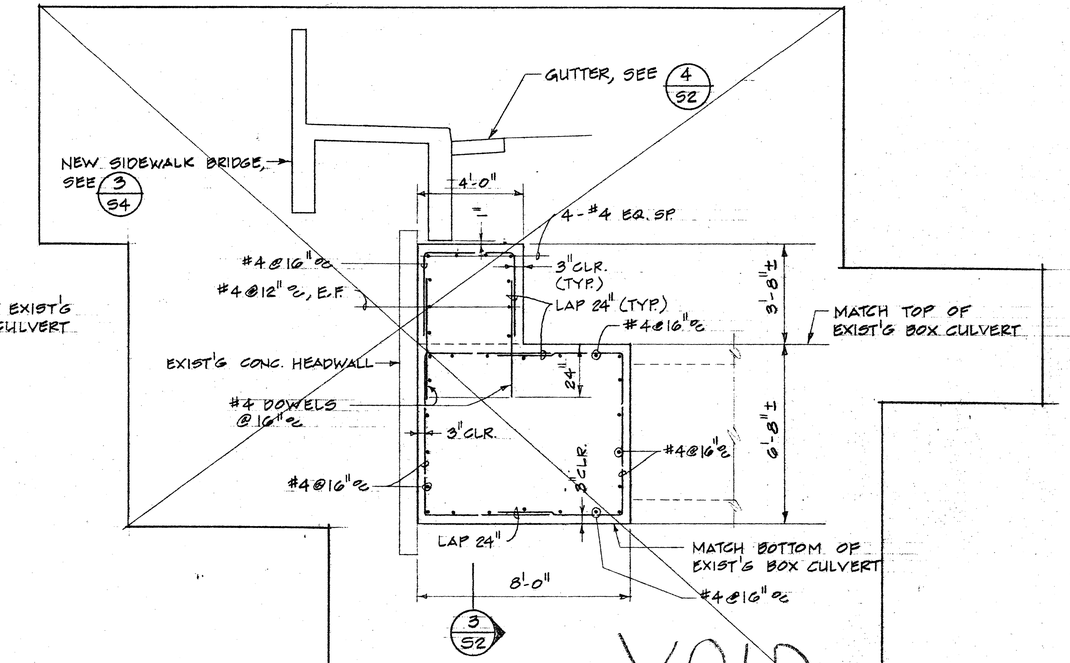

2/S2 SECTION
SCALE: 3/8" = 1'-0"

VOID

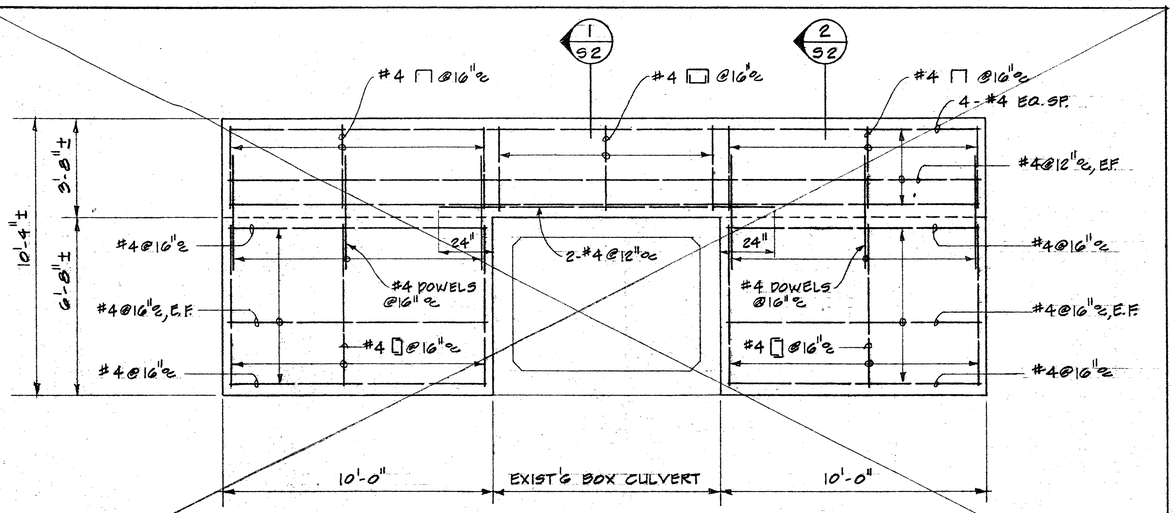

3/S2 SECTION
SCALE: 3/8" = 1'-0"

VOID

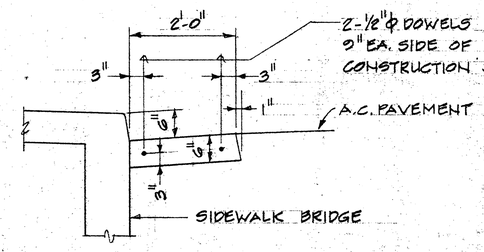

NOTES:

1. SPACE CONTRUCTION JT. AT 20 FEET MAX.

4/S2 GUTTER DETAIL
SCALE: 3/4" = 1'-0"

DATE	REVISION
9/7/89	Added new sheets to the original contract plans.

132 B

ALVIN Y. S. ZANE REGISTERED PROFESSIONAL ENGINEER No. 1535-S HAWAII, U.S.A.

THIS WORK WAS PREPARED BY ME OR UNDER MY SUPERVISION.

ALVIN ZANE & ASSOC.
CIVIL & STRUCTURAL ENGINEERS
FIRST INTERSTATE BANK BLDG.
1314 S. KING ST. SUITE 964
HONOLULU, HAWAII 96814
TELEPHONE: 526-3478

CONTRACTOR: KIEWIT PACIFIC CO.
2828 PALI STREET, SUITE 3060
HONOLULU, HI 96819

SAND ISLAND ROAD WIDENING
SIDEWALK BRIDGE AT STA. 36+10±

SECTIONS AND DETAILS

SHEET 5 OF 5 SHEETS
JOB NO. 88-5
DATE 4/2/

FED. ROAD DIST. NO.	STATE	FED. AID PROJ. NO.	FISCAL YEAR	SHEET NO.	TOTAL SHEETS
HAWAII	HAW.	BR-F-064-1(2)	1987	132 C	151

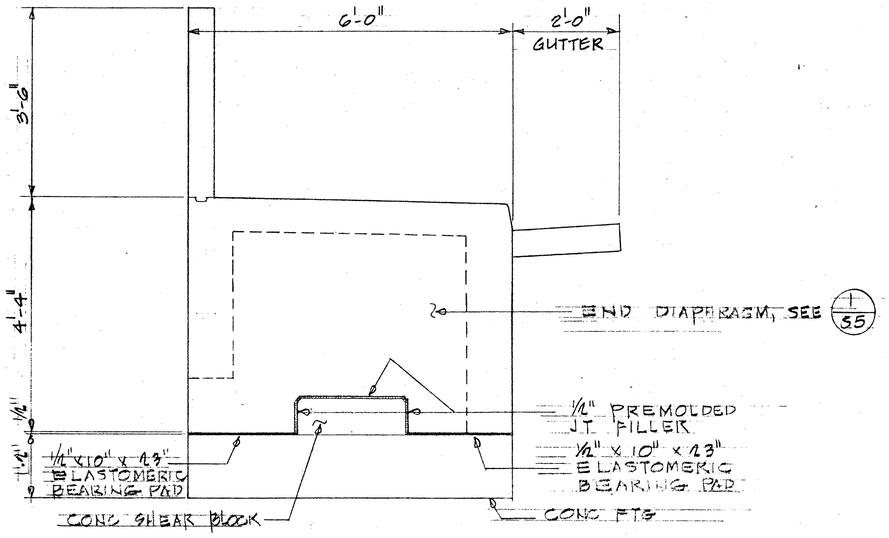

4/S3 END ELEVATION
SCALE: 3/4" = 1'-0"

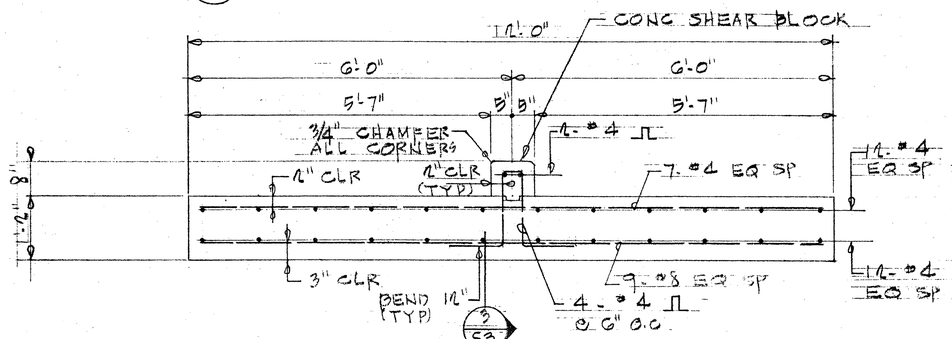

2/S3 FOOTING SECTION
SCALE: 3/4" = 1'-0"

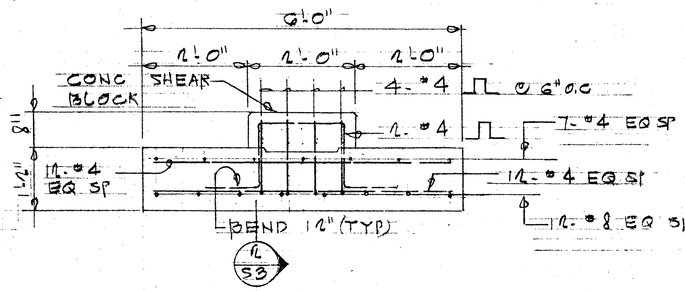

3/S3 FOOTING SECTION
SCALE: 3/4" = 1'-0"

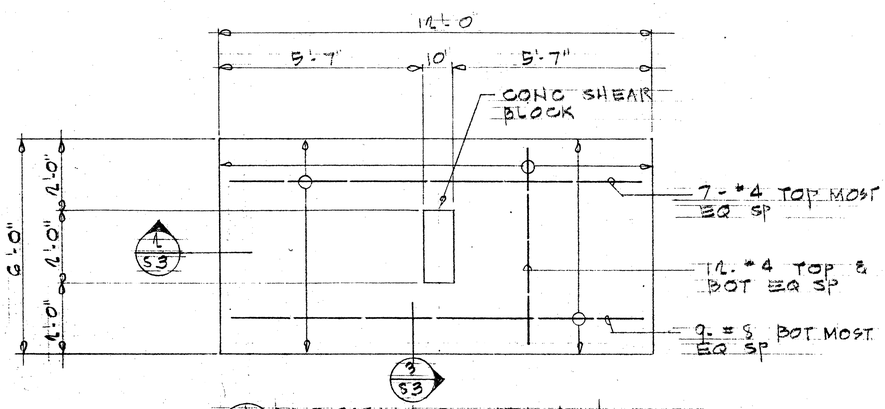

1/S3 FOOTING PLAN
SCALE: 1/2" = 1'-0"

DATE	REVISION
9/7/89	Added new sheets to the original contract plans.

132 C

ALVIN Y. S. ZANE REGISTERED PROFESSIONAL ENGINEER No. 1535-S HAWAII, U.S.A.

THIS WORK WAS PREPARED BY ME OR UNDER MY SUPERVISION.

OWNERSHIP OF DOCUMENTS
This document, and the ideas and designs incorporated herein, as an instrument of professional service, is the property of Alvin Zane and Associates, Inc., and is not to be used, in whole or in part, for any other project without written authorization of Alvin Zane and Associates, Inc.

ALVIN ZANE & ASSOC.
CIVIL & STRUCTURAL ENGINEERS
FIRST INTERSTATE BANK BLDG.
1314 S. KING ST. SUITE 964
HONOLULU, HAWAII 96814
TELEPHONE: 524-3478

CONTRACTOR: KIEWIT PACIFIC CO.
2829 PAA STREET, SUITE 3060
HONOLULU, HI 96819

SAND ISLAND ROAD WIDENING
SIDEWALK BRIDGE AT STA. 36+10±

FOOTING DETAILS

SHEET 53 OF 53 SHEETS
JOB NO. 41 1 1
DATE 7/1/89

FED. ROAD DIST. NO.	STATE	FED. AID PROJ. NO.	FISCAL YEAR	SHEET NO.	TOTAL SHEETS
HAWAII	HAW.	BR-F-064-1(2)	1987	132D	151

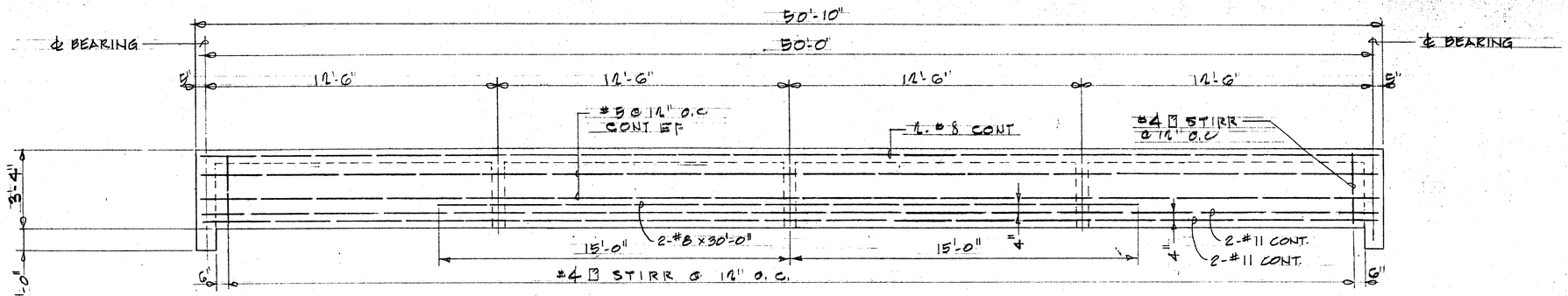

1 BEAM B-1 ELEVATION
54 SCALE: 3/8" = 1'-0"

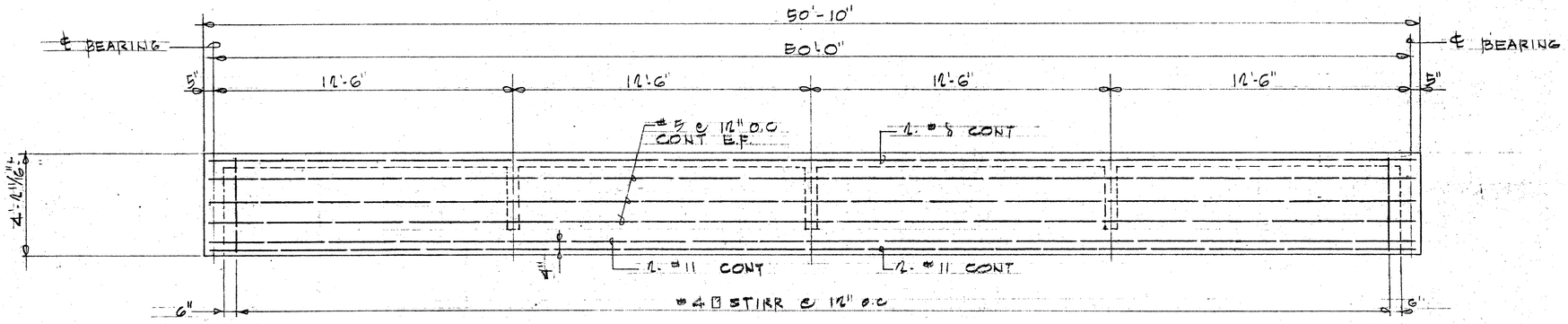

2 BEAM B-2 ELEVATION
54 SCALE: 3/8" = 1'-0"

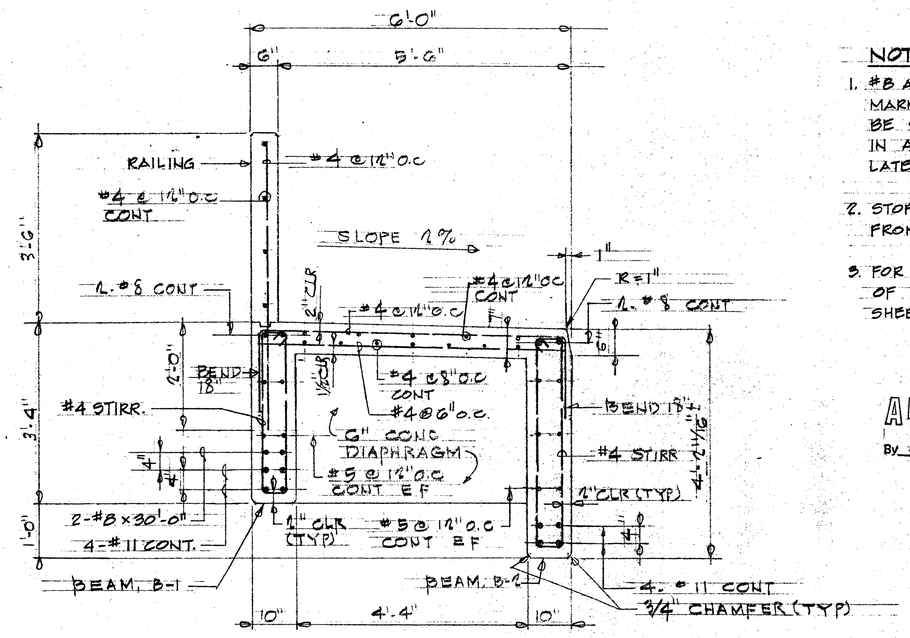

3 TYP SECTION
54 SCALE: 3/4" = 1'-0"

NOTES:

1. #8 AND #11 REINFORCING BARS MARKED CONTINUOUS (CONT.) SHALL BE SPLICED BY DIRECT BUTT SPLICES IN ACCORDANCE WITH AWS D14, LATEST EDITION.
2. STOP #8 AND #11 CONT. BARS 2 INCHES FROM ENDS OF BEAMS.
3. FOR REINFORCING DETAILS AT ENDS OF BEAMS, SEE END DIAPHRAGM, SHEET S-5.

APPROVED
By E. Kobatake 9-7-89

DATE	REVISION
9/7/89	Added new sheets to the original contract plans.

132 D

ALVIN Y. S. ZANE REGISTERED PROFESSIONAL ENGINEER No. 13355-S HAWAII, U.S.A.

THIS WORK WAS PREPARED BY ME OR UNDER MY SUPERVISION.

ALVIN ZANE & ASSOC.
CIVIL & STRUCTURAL ENGINEERS
FIRST INTERSTATE BANK BLDG.
1314 S. KING ST. SUITE 964
HONOLULU, HAWAII 96814
TELEPHONE: 524-3478

CONTRACTOR: KIEWIT PACIFIC CO.
2828 PAA STREET, SUITE 3060
HONOLULU, HI 96819

SAND ISLAND ROAD WIDENING
SIDEWALK BRIDGE AT STA. 36+10±

BEAM ELEVATIONS AND SECTION

SHEET S-4
OF 5 SHEETS
JOB NO. 83-41
DATE: 6/7/89

FED. ROAD DIST. NO.	STATE	FED. AID PROJ. NO.	FISCAL YEAR	SHEET NO.	TOTAL SHEETS
HAWAII	HAW.	BR-F-064-1(2)	1987	132E	151

NOTE:
BALANCE OF REINF. NOT SHOWN FOR CLARITY.

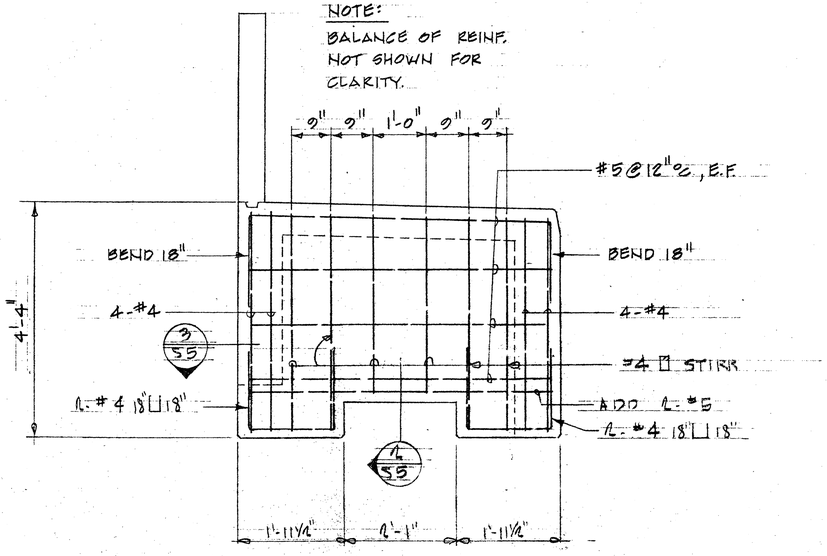

1/55 END DIAPHRAGM ELEVATION
SCALE: 3/4" = 1'-0"

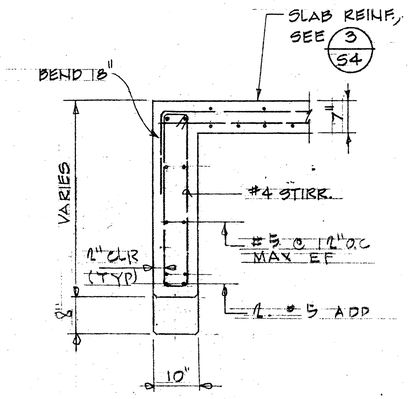

2/55 END DIAPHRAGM SECTION
SCALE: 3/4" = 1'-0"

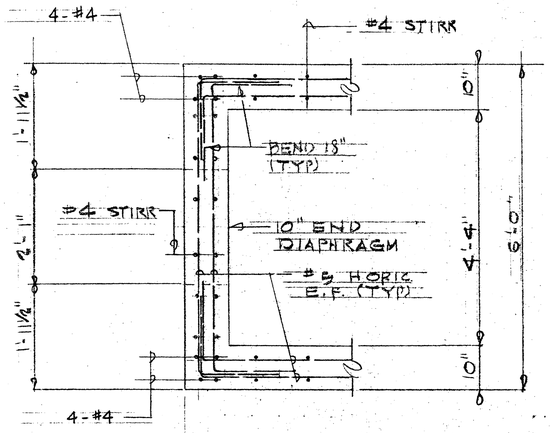

3/55 SECTION
SCALE: 3/4" = 1'-0"

NOTE:
BALANCE OF REINF NOT SHOWN FOR CLARITY

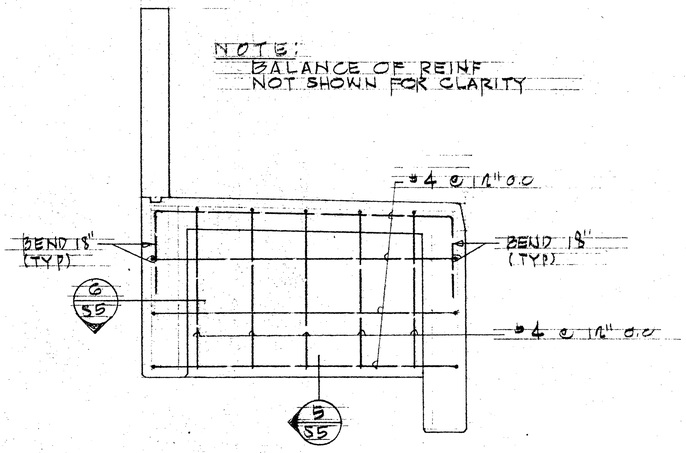

4/55 INTERIOR DIAPHRAGM REINF
SCALE: 3/4" = 1'-0"

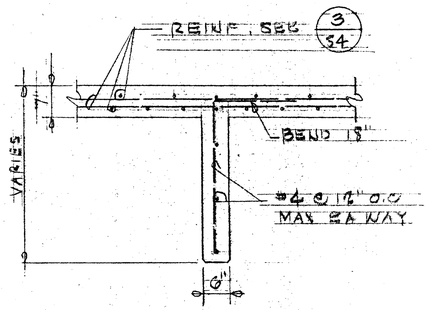

5/55 TYP SECTION
SCALE: 3/4" = 1'-0"

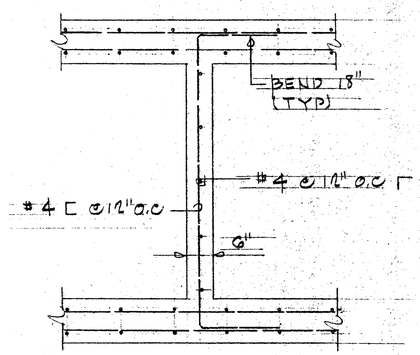

6/55 TYP SECTION
SCALE: 3/4" = 1'-0"

DATE	REVISION
9/7/89	Added new sheets to the original contract plans.

132E

ALVIN Y. S. ZANE REGISTERED PROFESSIONAL ENGINEER No. 1535-S HAWAII, U.S.A.

THIS WORK WAS PREPARED BY ME OR UNDER MY SUPERVISION.

ALVIN ZANE & ASSOC.
CIVIL & STRUCTURAL ENGINEERS
FIRST INTERSTATE BANK BLDG.
1314 S. KING ST. SUITE 964
HONOLULU, HAWAII 96814
TELEPHONE: 524-3478

CONTRACTOR: KIEWIT PACIFIC CO.
2828 PAA STREET, SUITE 3060
HONOLULU, HI. 96819

SAND ISLAND ROAD WIDENING
SIDEWALK BRIDGE AT STA. 36+10±

DIAPHRAGM ELEVATIONS & SECTIONS

SHEET 5 OF 5 SHEETS
JOB NO. 11 21
DATE 6/2/89