| FED. ROAD DIST. NO. | STATE | FED. AID PROJ. NO. | FISCAL YEAR | TOTAL SHEETS |
|---|---|---|---|---|
| HAWAII | HAW. | STP-0300(66) | 1998 | 811 |

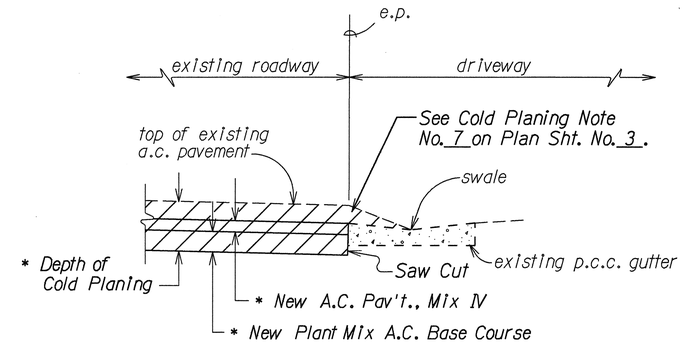


CONCRETE SWALE COLD PLANING AND RESURFACING DETAIL

Not to Scale

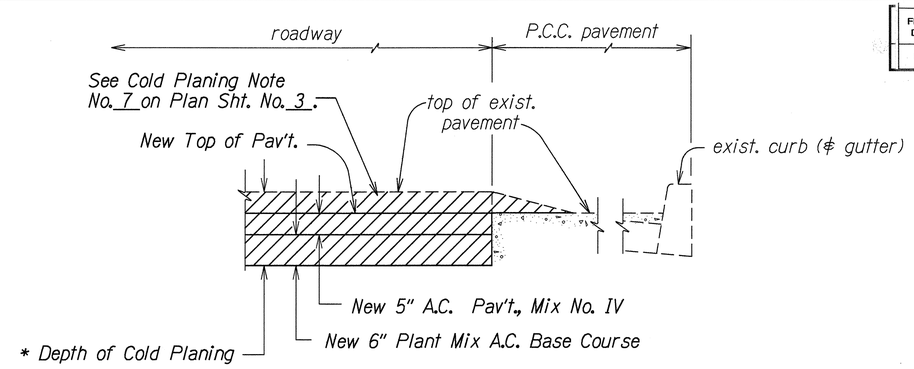


P.C.C. PAVEMENT RESURFACING DETAIL

Kalihi St. ⊕ Sta. 16+85± to Likelike Hwy. ⊕ Sta. 1+80± Inbound

Kalihi St. ⊕ Sta. 16+85± to Likelike Hwy. ⊕ Sta. 16+00± Outbound

Not to Scale

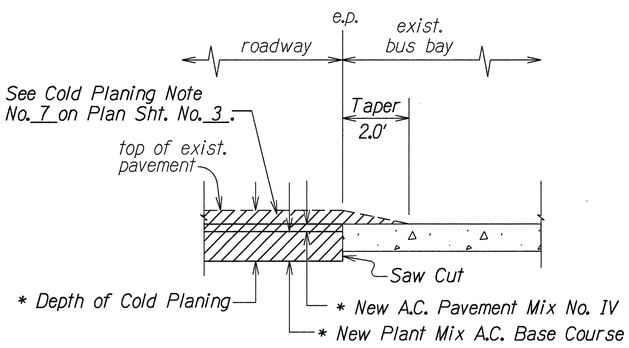


BUS BAY COLD PLANING AND RESURFACING DETAIL

Not To Scale

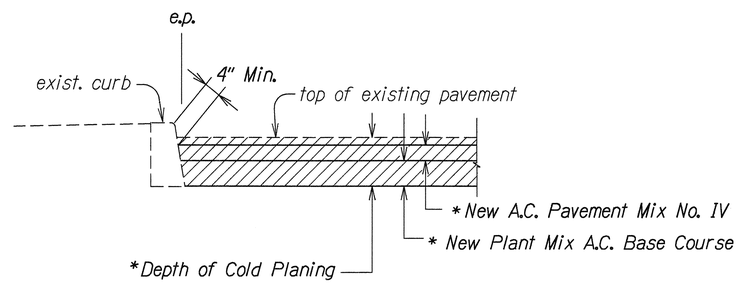


COLD PLANING AND RESURFACING AT CURB

Not To Scale

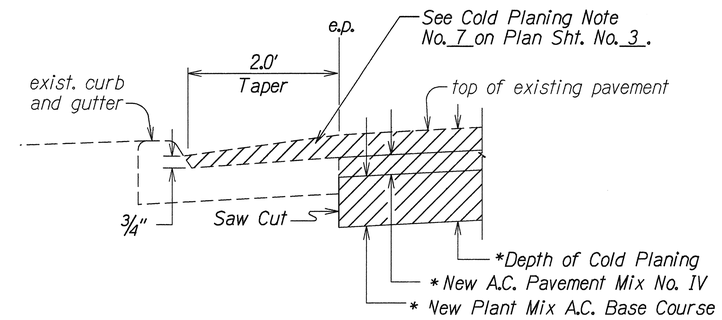


COLD PLANING AND RESURFACING AT CURB AND GUTTER

Not To Scale

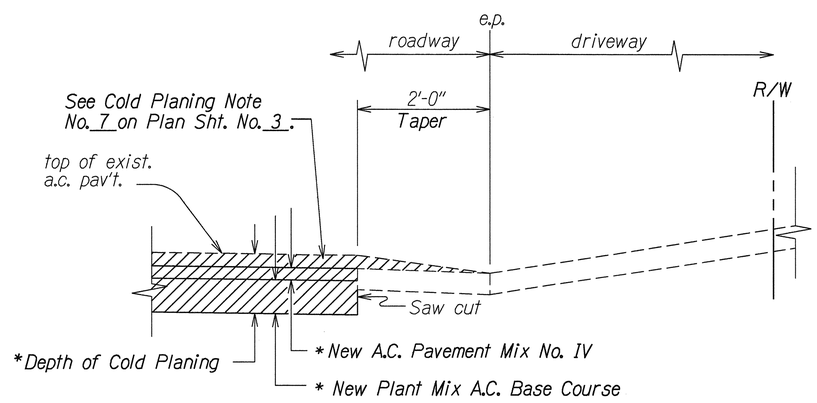


CONCRETE DROP DRIVEWAY COLD PLANING AND RESURFACING DETAIL

Not to Scale

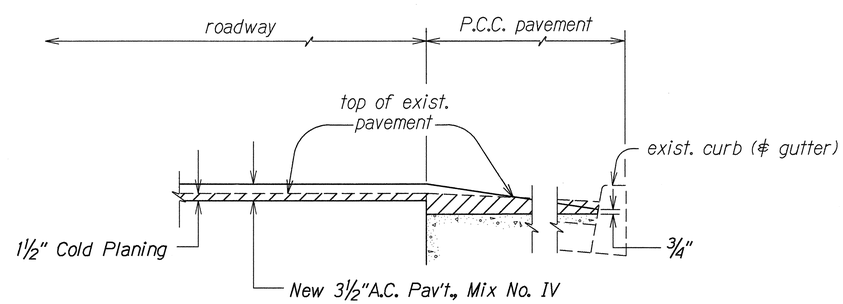


P.C.C. PAVEMENT COLD PLANING AND RESURFACING DETAIL

Likelike ⊕ Sta. 7+20± to ⊕ Sta. 72+00± Inbound

Not to Scale

* Note: For Thickness, See Schedule on Plan Sht. No. 20

STATE OF HAWAII
DEPARTMENT OF TRANSPORTATION
HIGHWAYS DIVISION

TYPICAL DETAILS IN COLD PLANING AREAS

LIKELIKE HIGHWAY RESURFACING
F.A. Project No. NH-063-1(19)
KALIHI STREET RESURFACING
F.A. Project No. STP-063-1(20)

Date: May, 1995

SHEET No. 1 OF 5 SHEETS

| ORIGINAL PLAN | SURVEY PLOTTED BY | DATE 6/7/95 |
|---|---|---|
| | DRAWN BY | |
| | TRACED BY | |
| NOTE BOOK | DESIGNED BY | |
| dd/legs/hiway | QUANTITIES BY | |
| No. (illegible) | CHECKED BY | |

| FED. ROAD DIST. NO. | STATE | FED. AID PROJ. NO. | FISCAL YEAR | TOTAL SHEETS |
|---|---|---|---|---|
| HAWAII | HAW. | STP-0300(66) | 1998 | 811 |

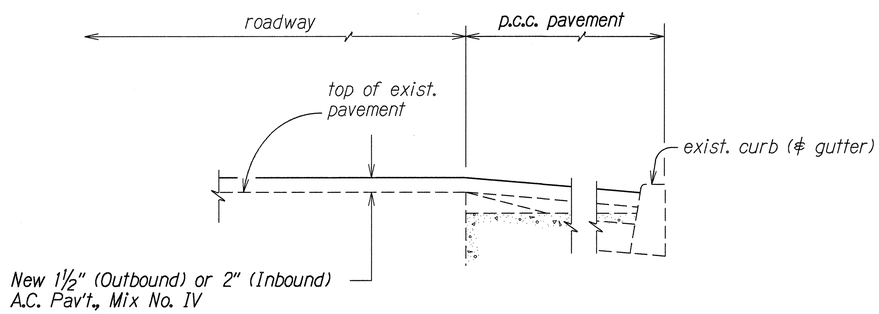


## P.C.C. PAVEMENT RESURFACING DETAIL

Not to Scale

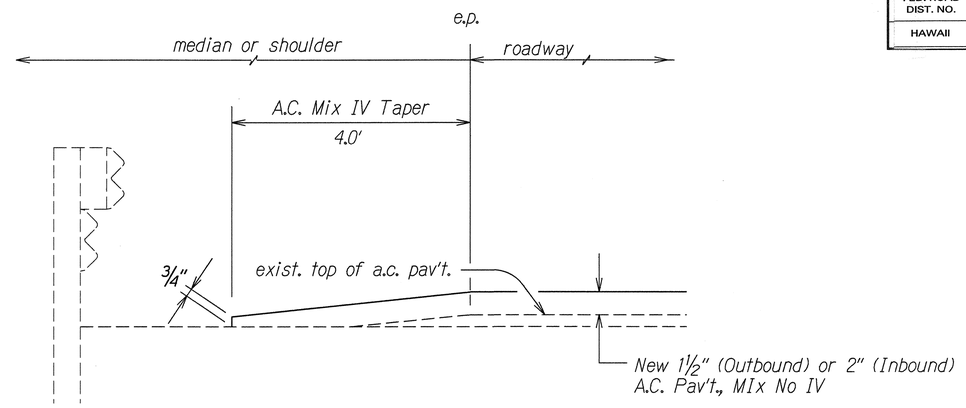


## RESURFACING AT MEDIAN OR SHOULDER WITH GUARDRAIL

Not To Scale

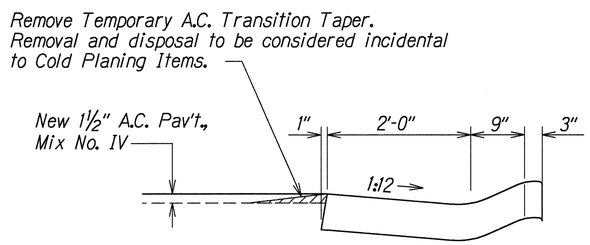


## A.C. TAPER REMOVAL DETAIL
## LIKELIKE HWY., ⅊ STA. 70+32± TO ⅊ STA. 74+87± Rt.

Not to Scale

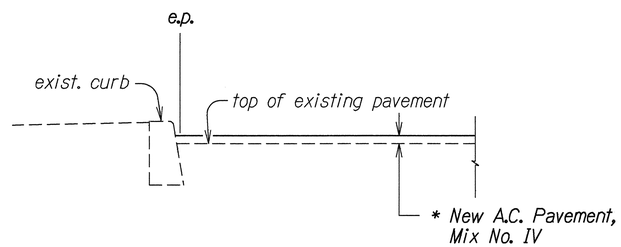


## RESURFACING AT CURB

Not To Scale

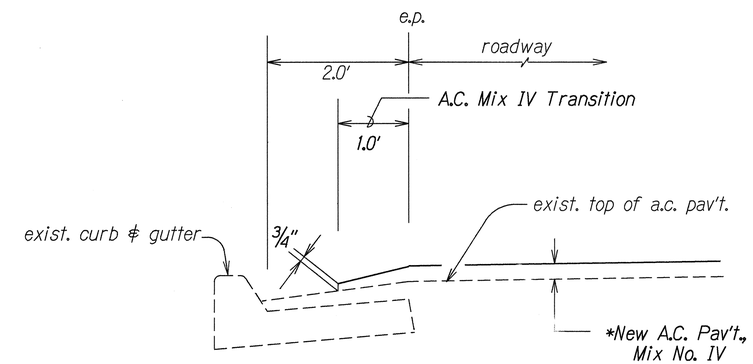


## RESURFACING AT CURB AND GUTTER

Not To Scale

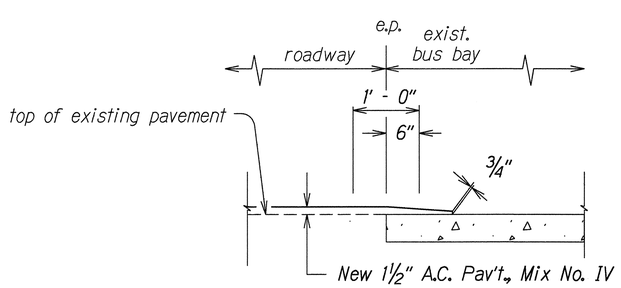


## BUS BAY RESURFACING DETAIL

Not To Scale

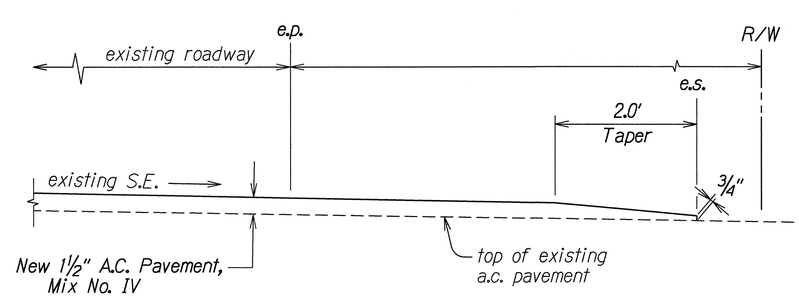


## DETAIL OF A.C. RESURFACING WHERE PAVED SHOULDER EXISTS

Not To Scale

* Note: For Thickness, See Schedule on Plan Sht. No. 20

| ORIGINAL PLAN | SURVEY PLOTTED BY | DATE 6/7/95 |
|---|---|---|
| | DRAWN BY | |
| | TRACED BY | |
| | DESIGNED BY | |
| NOTE BOOK | QUANTITIES BY | |
| No. | CHECKED BY | |

STATE OF HAWAII
DEPARTMENT OF TRANSPORTATION
HIGHWAYS DIVISION

## TYPICAL DETAILS

LIKELIKE HIGHWAY RESURFACING
F.A. Project No. NH-063-1(19)

KALIHI STREET RESURFACING
F.A. Project No. STP-063-1(20)

Date: May, 1995

SHEET No. 2 OF 5 SHEETS

| FED. ROAD DIST. NO. | STATE | FED. AID PROJ. NO. | FISCAL YEAR | TOTAL SHEETS |
|---|---|---|---|---|
| HAWAII | HAW. | STP-0300(66) | 1998 | 811 |

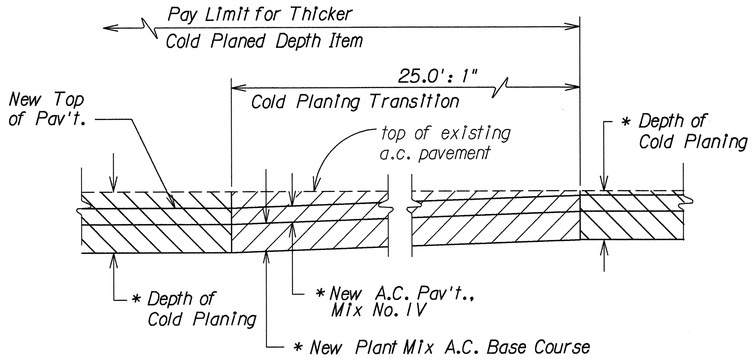


LONGITUDINAL COLD PLANING TRANSITION DETAIL
BETWEEN DIFFERENT COLD PLANING DEPTHS

Not to Scale

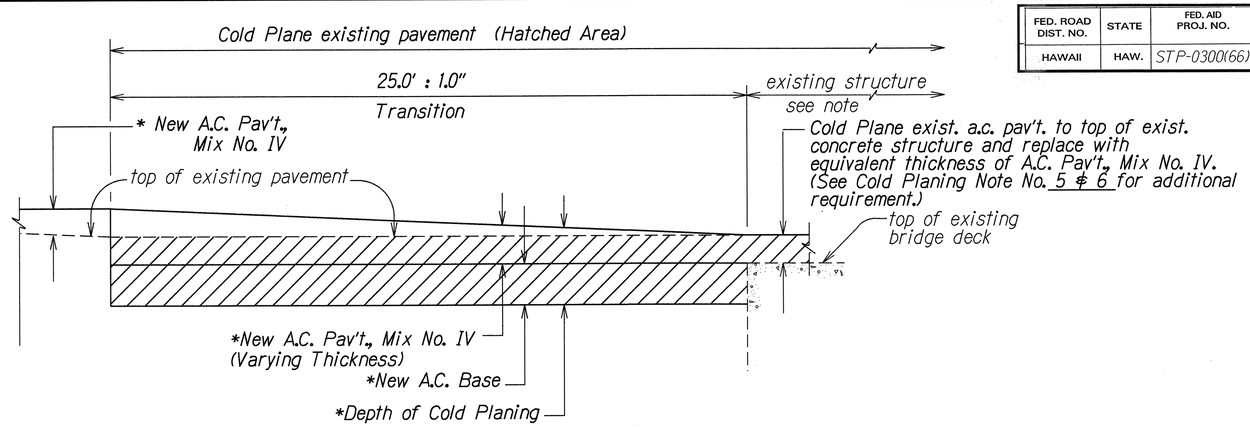


COLD PLANED TRANSITION AND RESURFACING
OVER EXISTING STRUCTURE

Not to Scale

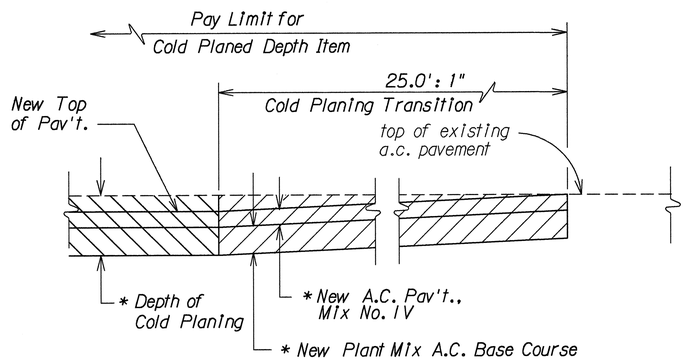


LONGITUDINAL COLD PLANING TRANSITION DETAIL
COLD PLANING TO EXISTING A.C. PAVEMENT AREA

Not to Scale

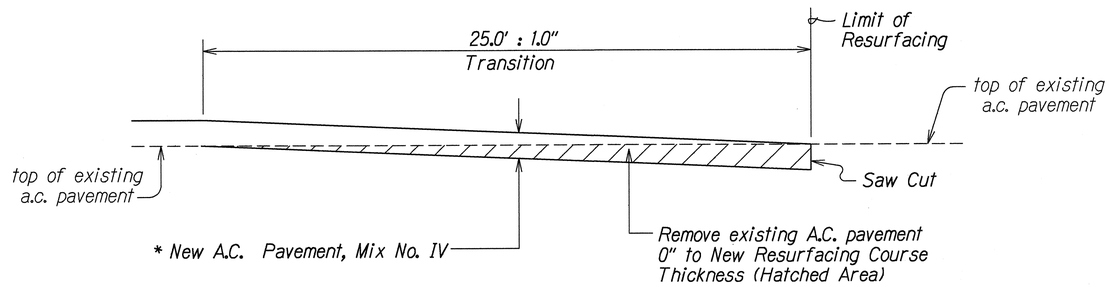


COLD PLANED TRANSITION TO EXISTING A.C. PAVEMENT

Not To Scale

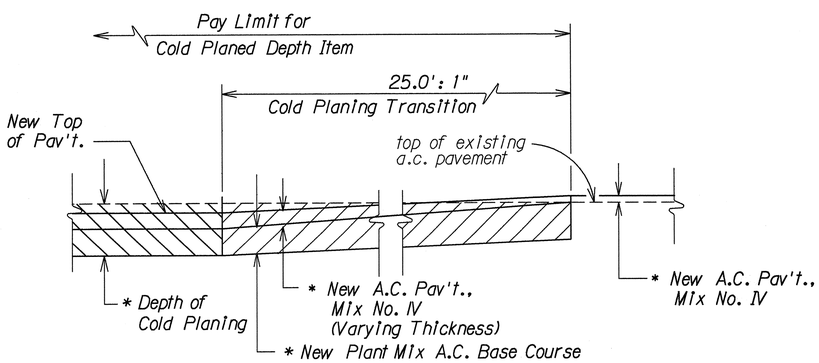


LONGITUDINAL COLD PLANING TRANSITION DETAIL
COLD PLANING TO A.C. OVERLAY AREA

Not to Scale

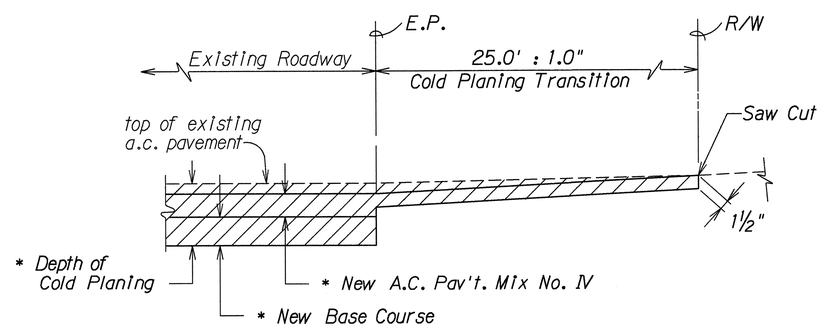


SIDE STREETS AND DRIVEWAY
COLD PLANING AND RESURFACING DETAIL

Not to Scale

Notes:

1. Provide smooth riding transition into driveways as directed by the Engineer. This work shall be considered incidental to Cold Planing.
2. Cold Planing thickness for driveways and side streets shall be 1½" unless otherwise noted on the plans.

* Note: For Thickness, See Schedule on Plan Sht. No. 20

| ORIGINAL PLAN | SURVEY PLOTTED BY | DATE 6/7/95 |
|---|---|---|
| | DRAWN BY | |
| | TRACED BY | |
| NOTE BOOK | DESIGNED BY | |
| | QUANTITIES BY | |
| No. | CHECKED BY | |

STATE OF HAWAII
DEPARTMENT OF TRANSPORTATION
HIGHWAYS DIVISION

TYPICAL DETAILS

LIKELIKE HIGHWAY RESURFACING
F.A. Project No. NH-063-1(19)

KALIHI STREET RESURFACING
F.A. Project No. STP-063-1(20)

Date: May, 1995

SHEET No. 3 OF 5 SHEETS

| FED. ROAD DIST. NO. | STATE | FED. AID PROJ. NO. | FISCAL YEAR | TOTAL SHEETS |
|---|---|---|---|---|
| HAWAII | HAW. | STP-0300(66) | 1998 | 811 |

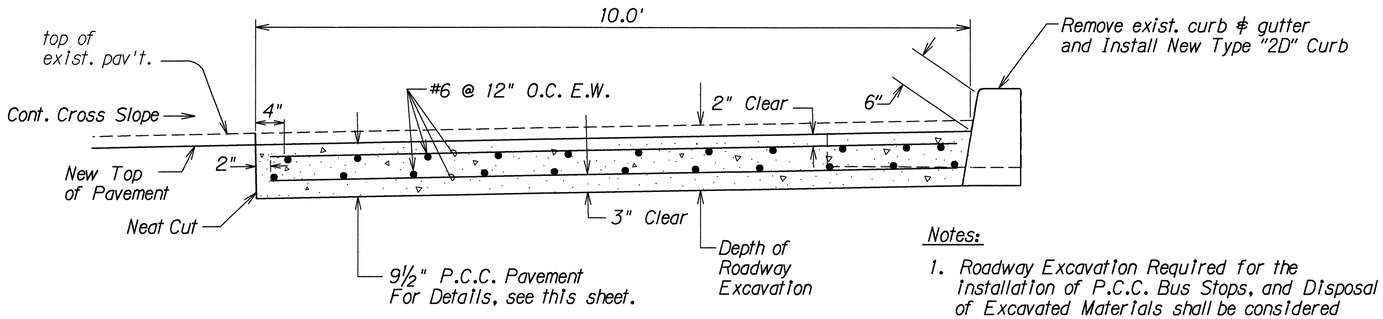


## P.C.C. BUS STOP PAVEMENT DETAIL

Not to Scale

Notes:

1. Roadway Excavation Required for the installation of P.C.C. Bus Stops, and Disposal of Excavated Materials shall be considered incidental to Item No. 411.1212, 9-1/2 Inch Reinforced Concrete Pavement, and will not be paid for separately.
2. Removal of existing curb & gutter shall be incidental to the New Curbing.

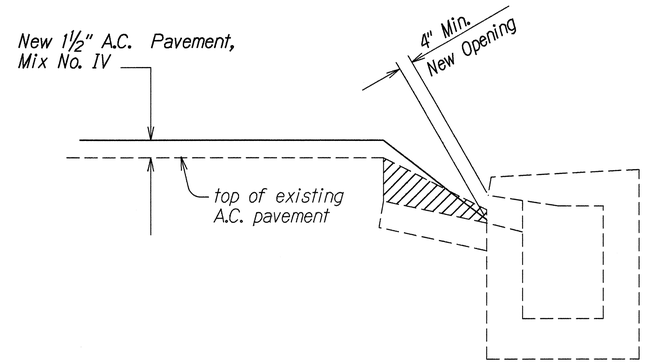


## RESURFACING TRANSITION AT CATCH BASINS

Not To Scale

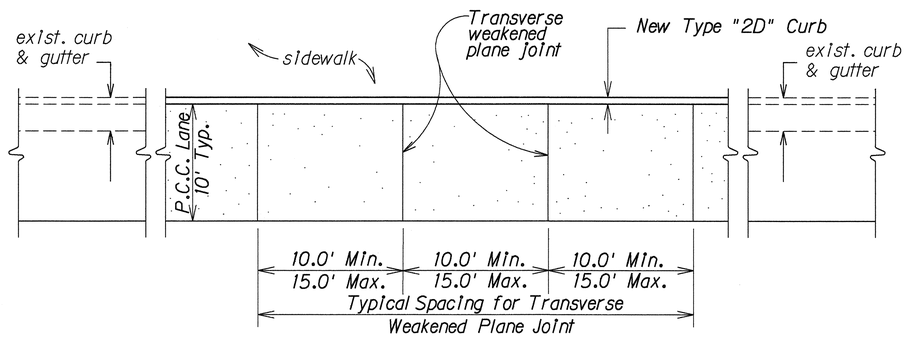


## TYPICAL JOINT LOCATION AND LAYOUT PLAN FOR P.C.C. BUS STOP

Not To Scale

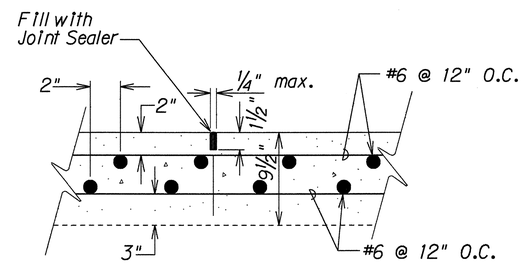


## TRANSVERSE WEAKENED PLANE JOINT FOR P.C.C. BUS STOP (SAWED CONTRACTION)

Not To Scale

FACE OF :
ROCK WALL (℄ Sta. 17+12± to ℄ Sta. 17+34±),
CMU WALL (℄Sta. 18+00± to ℄ Sta. 21+93±),
HEDGE (℄ Sta. 21+93± to ℄ Sta. 22+53±),
or FENCE (℄ Sta. 17+34± to ℄ Sta. 7+78±
and ℄ Sta. 22+53± to ℄ Sta. 23+32±).

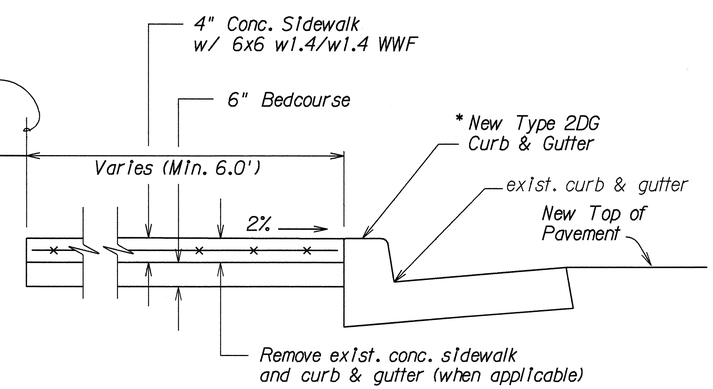


## REINFORCED CONCRETE SIDEWALK

Kalihi St. ℄ Sta. 17+12± to ℄ Sta. 23+32±

*Note: Kalihi St. ℄ Sta. 17+12± to Kalihi St. ℄ Sta. 17+34±

| | |
|---|---|
| 6/21/95 | Revise P.C.C Bus Stop Pav't. Detail Note No. 1 and Add Reinforced Conc. Sidewalk Detail. |
| DATE | REVISION |

STATE OF HAWAII
DEPARTMENT OF TRANSPORTATION
HIGHWAYS DIVISION

## MISCELLANEOUS DETAILS

LIKELIKE HIGHWAY RESURFACING
F.A. Project No. NH-063-1(19)

KALIHI STREET RESURFACING
F.A. Project No. STP-063-1(20)

Date: May, 1995

SHEET No. 4 OF 5 SHEETS

ADD. 12

| ORIGINAL PLAN | SURVEY PLOTTED BY | DATE 6/20/95 |
|---|---|---|
| | DRAWN BY | |
| | TRACED BY | |
| NOTE BOOK | DESIGNED BY | |
| | QUANTITIES BY | |
| No. | CHECKED BY | |

| FED. ROAD DIST. NO. | STATE | FED. AID PROJ. NO. | FISCAL YEAR | TOTAL SHEETS |
|---|---|---|---|---|
| HAWAII | HAW. | STP-0300(66) | 1998 | 811 |

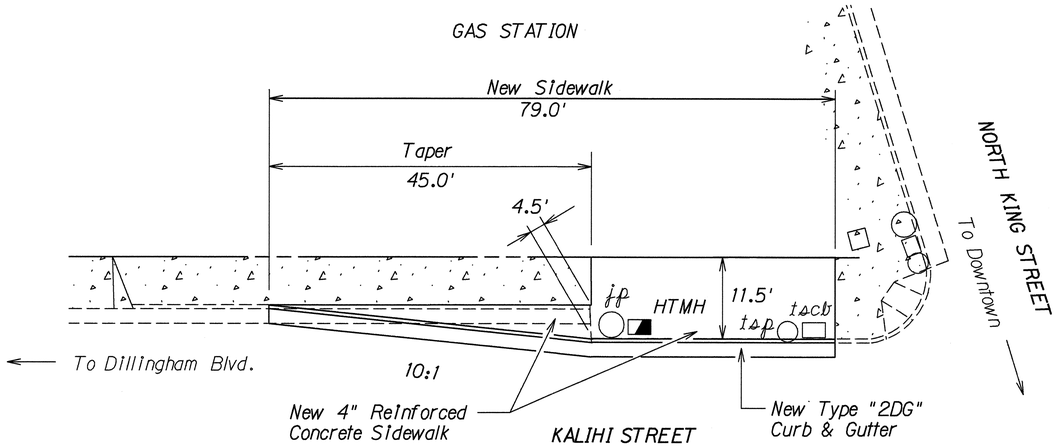


Note: Connect New Curbing and Sidewalk to Match Existing.

PLAN
Scale: 1"=10'

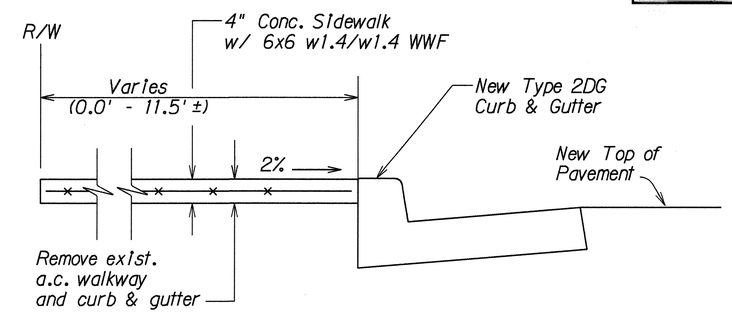


DETAIL
Not to Scale

# SIDEWALK RECONSTRUCTION
## KALIHI STREET ℄ STA. 31+26± TO ℄ STA. 32+50± LT.

Scale: 1"=10'

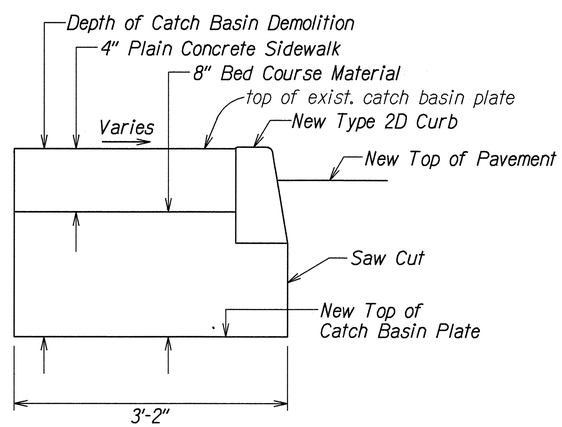


NOTE: Demolition and disposal of top of catch basin, covering of new top of catch basin, bedcourse, plain concrete sidewalk and all equipment, tools, labor and incidentals necessary to complete the work shall be considered incidental to Item No. 650.1000 - Wheelchair Ramp, Type "A".

DETAIL
Not To Scale

℄ Sta. 39+29± o/s 38'± Lt.
Demolish approximately 12" of the top of the existing catch basin and cover catch basin with the existing steel plate. The steel plate should be made immobile prior to backfilling. Construct Plain Concrete Sidewalk, Curb - Typem 2D (3± L.F.) and Type "A" Wheelchair Ramp. See this sheet for Detail.

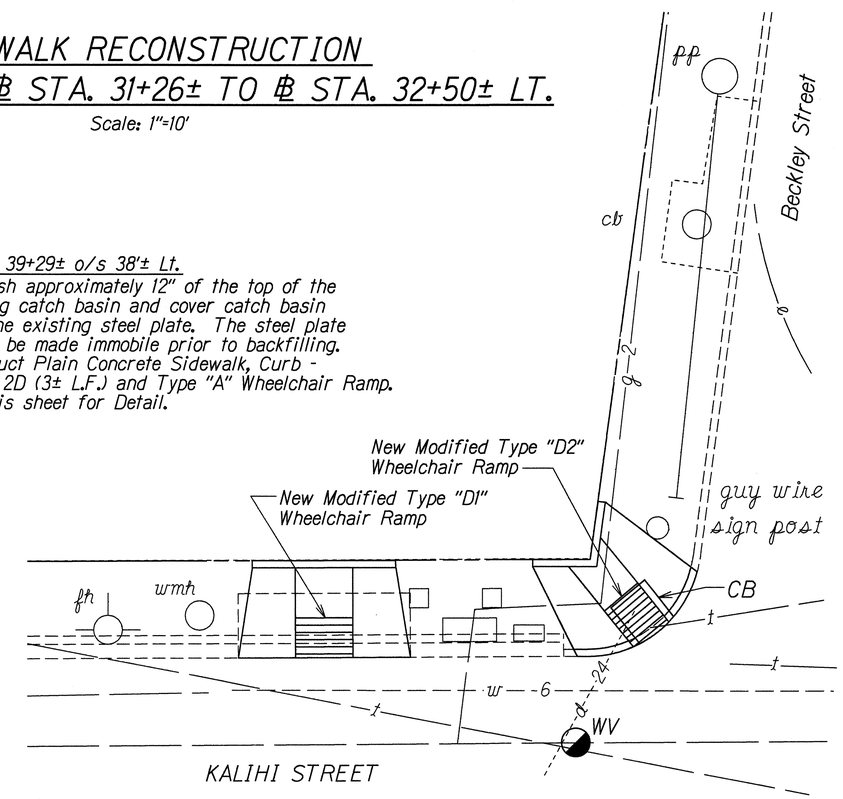


PLAN
Scale: 1"=5'

# PARTIAL CATCH BASIN DEMOLITION AND SIDEWALK RECONSTRUCTION

Scale As Shown

| DATE | REVISION |
|---|---|
| 11/20/95 | Revise Wheelchair Ramp Types at Beckley St. |
| 6/21/95 | Revise "Sidewalk Reconstruction" Title, Catch Basin Detail Note, and Catch Basin Plan Note. |

STATE OF HAWAII
DEPARTMENT OF TRANSPORTATION
HIGHWAYS DIVISION

## MISCELLANEOUS DETAILS

LIKELIKE HIGHWAY RESURFACING
F.A. Project No. NH-063-1(19)

KALIHI STREET RESURFACING
F.A. Project No. STP-063-1(20)

Date: May, 1995

SHEET No. 5 OF 5 SHEETS

C.O. 13R

| ORIGINAL PLAN | SURVEY PLOTTED BY | DATE 5/20/96 |
|---|---|---|
| | DRAWN BY J. | |
| | TRACED BY | |
| NOTE BOOK dd.mh No. 2/likelike | DESIGNED BY L. Yoramitre | |
| | QUANTITIES BY | |
| | CHECKED BY | |

| FED. ROAD DIST. NO. | STATE | FED. AID PROJ. NO. | FISCAL YEAR | TOTAL SHEETS |
|---|---|---|---|---|
| HAWAII | HAW. | STP-0300(66) | 1998 | 811 |

NOTES:

1. For additional Wheelchair Ramp details, see Section 650 - Wheelchair Ramps of the Special Provisions.
2. All curbing angle points within the wheelchair ramps shall be rounded with R=6".
3. Wheelchair Ramp widening shall be made part of "Modified Type "C2" Wheelchair Ramp" and will not be paid for separately.
4. Curbs shall be considered incidental to the Wheelchair Ramps.

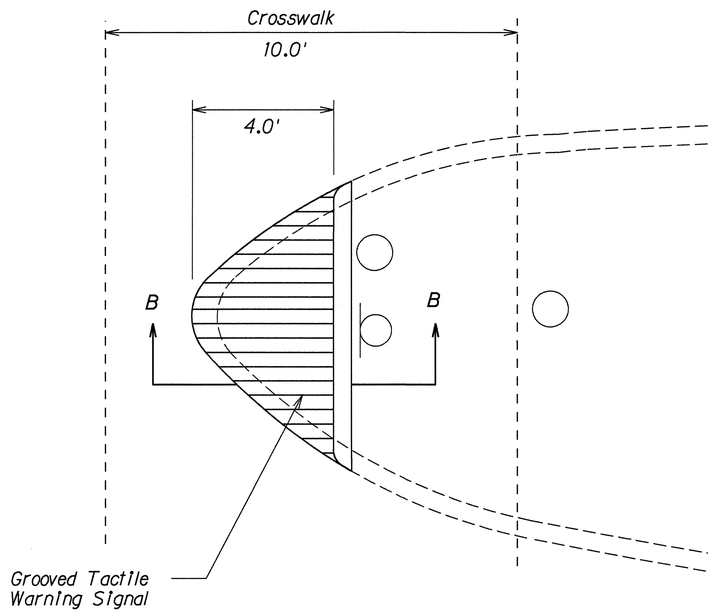


PLAN

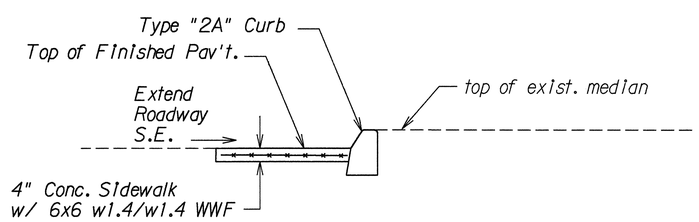


SECTION B-B

MODIFIED TYPE "C1" WHEELCHAIR RAMP DETAIL
Likelike Hwy. ℄ Sta. 14+60± Rt.

Scale: 1/2"=1'-0"

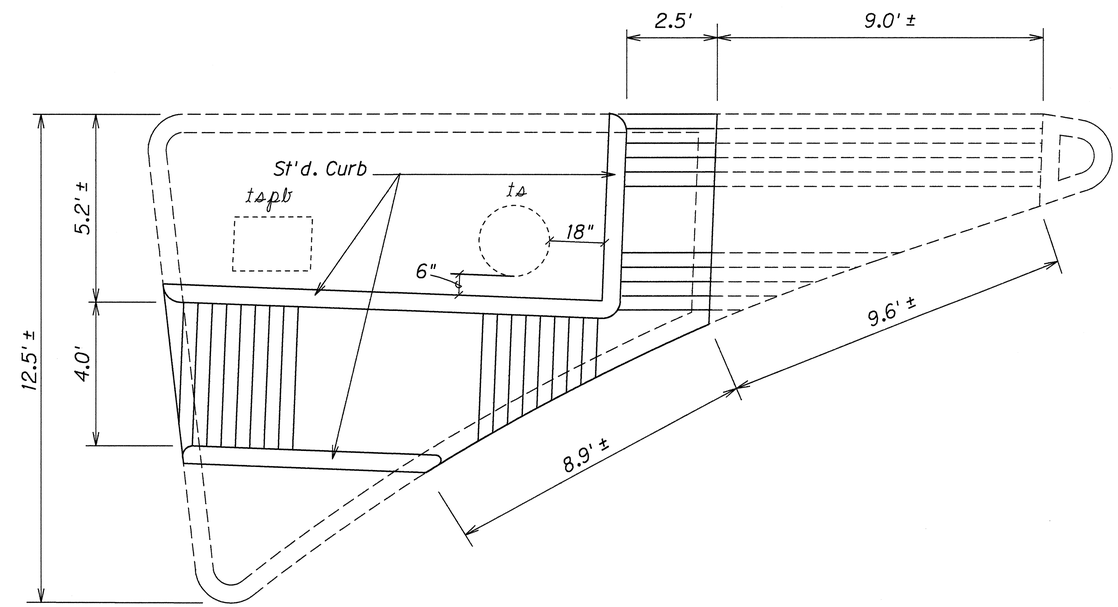


MODIFIED TYPE "C2" WHEELCHAIR RAMP ∉
WHEELCHAIR RAMP WIDENING DETAIL
Likelike Hwy. ℄ Sta. 15+00± Rt.

Scale: 1/2" = 1'-0"

| ORIGINAL PLAN | SURVEY PLOTTED BY ____ DATE 6/20/95 |
|---|---|
| | DRAWN BY ____ |
| | TRACED BY ____ |
| NOTE BOOK | DESIGNED BY ____ |
| | QUANTITIES BY ____ |
| No. ____ | CHECKED BY ____ |

STATE OF HAWAII
DEPARTMENT OF TRANSPORTATION
HIGHWAYS DIVISION

MISCELLANEOUS DETAILS

LIKELIKE HIGHWAY RESURFACING
F.A. Project No. NH-063-1(19)

KALIHI STREET RESURFACING
F.A. Project No. STP-063-1(20)

Date: May, 1995

| FED. ROAD DIST. NO. | STATE | FED. AID PROJ. NO. | FISCAL YEAR | SHEET NO. | TOTAL SHEETS |
|---|---|---|---|---|---|
| HAWAII | HAW. | NH-063-1(19)/ STP-063-1(20) | 1995 | C.O. 13 S-2 | 78 |

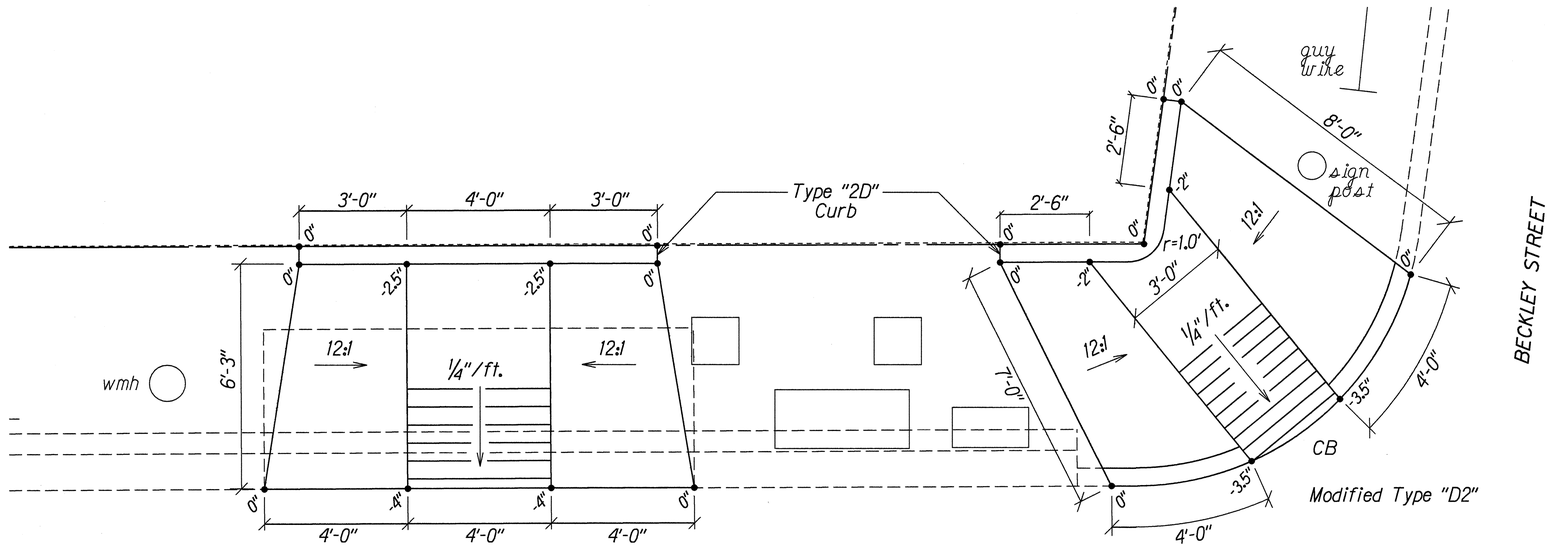


## MODIFIED TYPE "D1" AND "D2" WHEELCHAIR RAMP

Scale: 1/2" = 1'

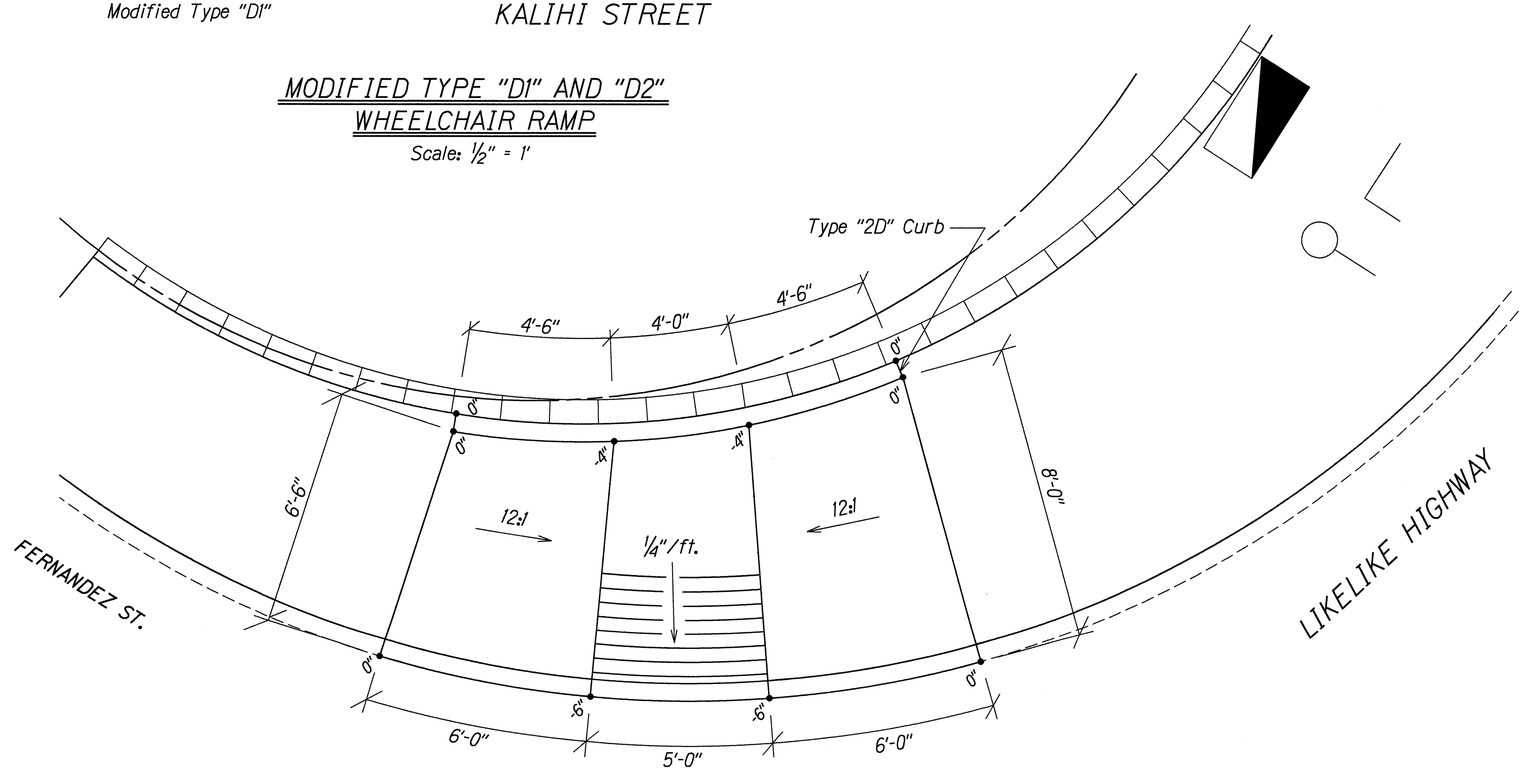


## MODIFIED TYPE "D3" WHEELCHAIR RAMP

Scale: 1/2" = 1'

| DATE | REVISION |
|---|---|
| 12/13/95 | Additional Wheelchair Ramp Details |

STATE OF HAWAII
DEPARTMENT OF TRANSPORTATION
HIGHWAYS DIVISION

## MISCELLANEOUS DETAILS

LIKELIKE HIGHWAY RESURFACING
F.A. Project No. NH-063-1(19)

KALIHI STREET RESURFACING
F.A. Project No. STP-063-1(20)

Date: May, 1995

SHEET No. 5 OF 5 SHEETS

C.O. 13 S-2

ORIGINAL PLAN — SURVEY PLOTTED BY ___ DRAWN BY J. — TRACED BY ___ DESIGNED BY L. Yoneshima — QUANTITIES BY ___ CHECKED BY ___ — DATE 11/20/95

NOTE BOOK ddlmh No. 21/16/15/mc

| FED. ROAD DIST. NO. | STATE | FED. AID PROJ. NO. | FISCAL YEAR | TOTAL SHEETS |
|---|---|---|---|---|
| HAWAII | HAW. | STP-0300(66) | 1998 | 811 |

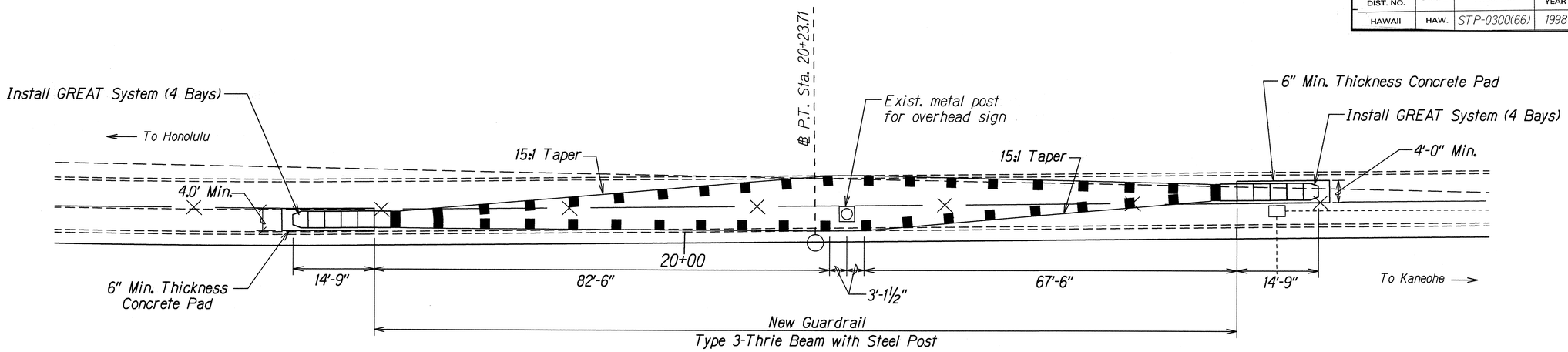


NOTE: Refer to Standard Plan TE-53, Metal Guardrail at Obstruction, for Post Spacing.

## TYPICAL DETAIL - GREAT SYSTEM
## KALIHI STREET ℄ STA 19+29± TO ℄ STA. 21+81± (MEDIAN)

Scale: 1"=10'

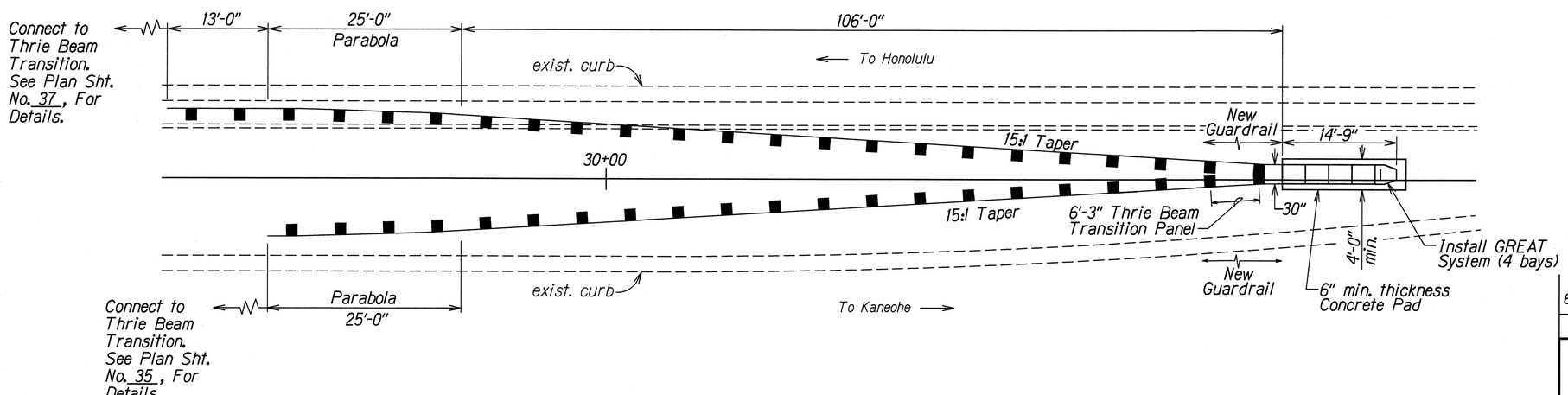


## TYPICAL DETAIL - GREAT SYSTEM
## LIKELIKE HIGHWAY ℄ STA. 28+94± TO ℄ STA. 30+65± (MEDIAN)

Scale: ⅛" = 1'-0"

| DATE | REVISION |
|---|---|
| 6/21/95 | Revise Top Detail Title |

STATE OF HAWAII
DEPARTMENT OF TRANSPORTATION
HIGHWAYS DIVISION

## GUARDRAIL DETAILS

LIKELIKE HIGHWAY RESURFACING
F.A. Project No. NH-063-1(19)

KALIHI STREET RESURFACING
F.A. Project No. STP-063-1(20)

Date: May, 1995

SHEET No. 1 OF 5 SHEETS

| ORIGINAL PLAN | SURVEY PLOTTED BY | DATE 6/21/95 |
|---|---|---|
| | DRAWN BY M. Howells/L. Milsurosh | |
| | TRACED BY | |
| NOTE BOOK | DESIGNED BY J. Yoneshima | |
| 411/411 | QUANTITIES BY | |
| 24/Margin | CHECKED BY | |

| FED. ROAD DIST. NO. | STATE | FED. AID PROJ. NO. | FISCAL YEAR | SHEET NO. | TOTAL SHEETS |
|---|---|---|---|---|---|
| HAWAII | HAW. | NH-063-1(19)/ STP-063-1(20) | 1995 | 15 | 78 |

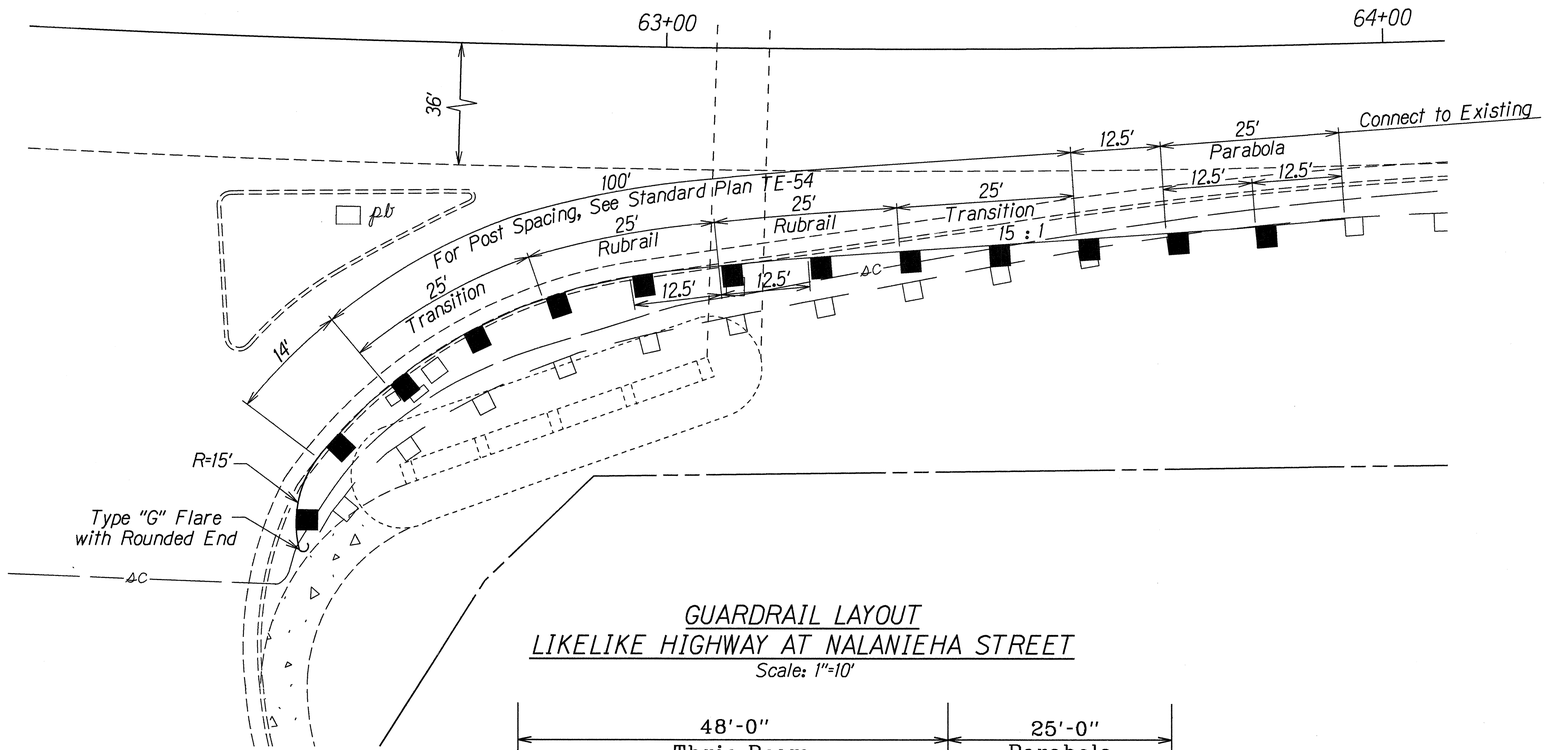


GUARDRAIL LAYOUT
LIKELIKE HIGHWAY AT NALANIEHA STREET
Scale: 1"=10'

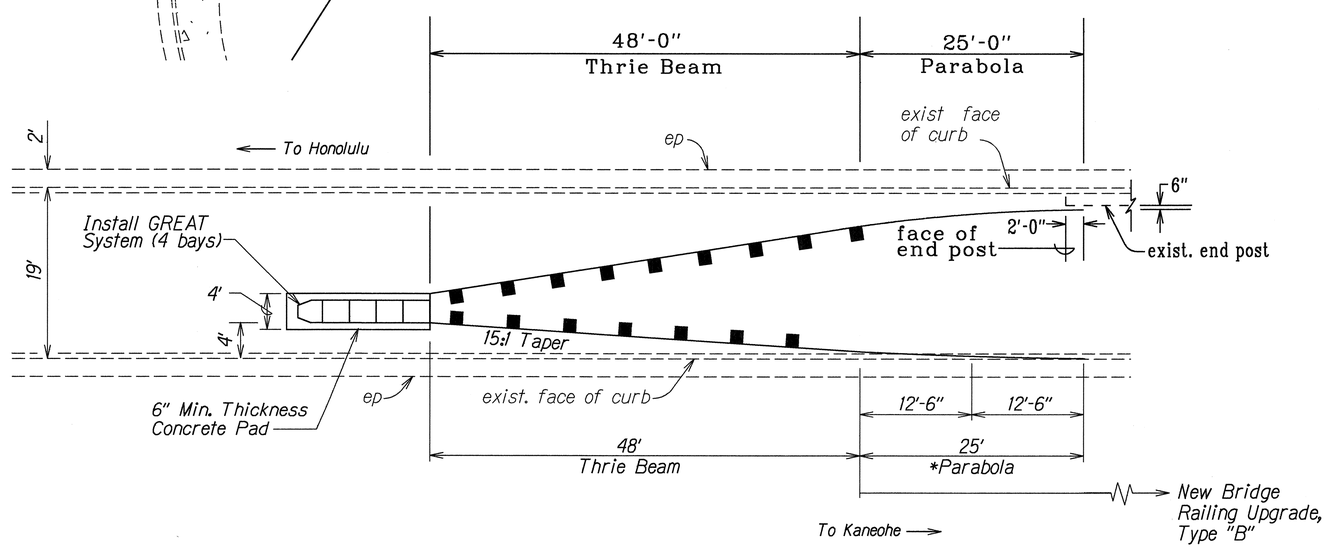


TYPICAL DETAIL - GREAT SYSTEM
LIKELIKE HIGHWAY ℄ STA. 26+10± RT. (MEDIAN)
Scale: 1/8"= 1'

*See Plan Sht. No. 35,
For New Bridge Railing Upgrade.

| LEGEND FOR AS-BUILT POSTINGS | |
|---|---|
| ∿∿∿ | Squiggly line for as-built deletion |
| ~~100.00~~ | Double line for as-built deletion |
| Roadway | Text for as-built posting |

STATE OF HAWAII
DEPARTMENT OF TRANSPORTATION
HIGHWAYS DIVISION

GUARDRAIL DETAILS

KALIHI STREET RESURFACING
F.A. Project No. NH-063-1(19)
LIKELIKE HIGHWAY RESURFACING
F.A. Project No. NH-063-1(19)

Scale: As Shown Date: May, 1995

SHEET No. 2 OF 5 SHEETS

| ORIGINAL PLAN | SURVEY PLOTTED BY | DATE 5/30/95 |
|---|---|---|
| | DRAWN BY J. Mitsuyoshi | |
| | TRACED BY | |
| NOTE BOOK | DESIGNED BY J. Yoramitne | |
| dot.nh | QUANTITIES BY | |
| No. 2likelgr2 | CHECKED BY | |

"AS-BUILT"

| FED. ROAD DIST. NO. | STATE | FED. AID PROJ. NO. | FISCAL YEAR | SHEET NO. | TOTAL SHEETS |
|---|---|---|---|---|---|
| HAWAII | HAW. | NH-063-1(19)/ STP-063-1(20) | 1995 | 16 | 78 |

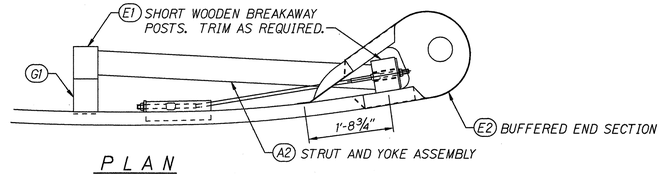


PLAN

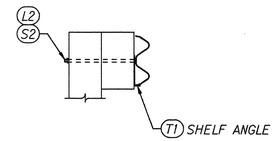


SECTION B - B

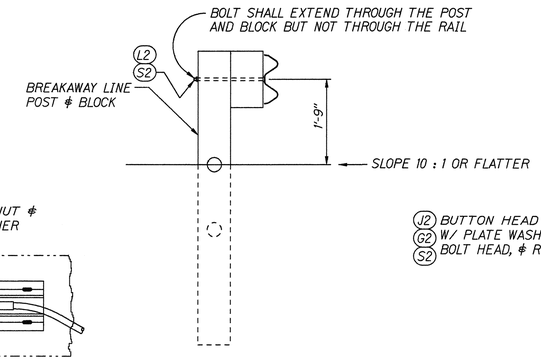


SECTION A - A

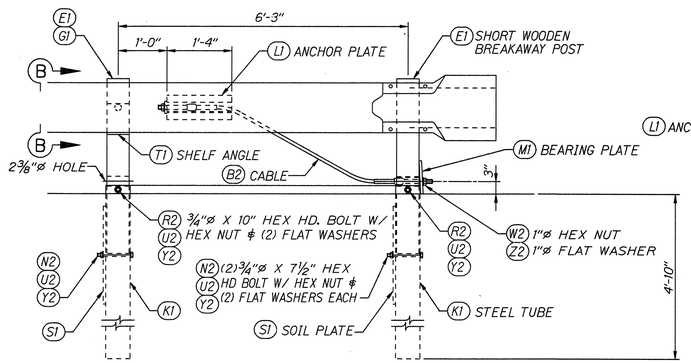


ELEVATION

BUFFERED END & ANCHORAGE ASSEMBLY

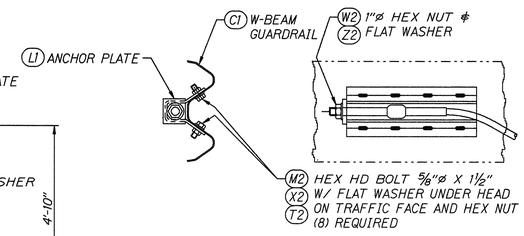


ANCHOR PLATE ASSEMBLY DETAILS

## NOTES

1. THE POST OFFSET DIMENSIONS ARE GIVEN TO THE CENTER OF THE TRAFFIC FACE OF THE BLOCKOUTS, EXCEPT AT THE FIRST POST, WHERE THE DIMENSION IS TO THE CENTER OF THE TRAFFIC FACE OF THE POST. OFFSET POINTS ARE TO BE LOCATED BY CHORD MEASUREMENTS AT THE BACK OF THE RAIL EQUAL TO THE NOMINAL POST SPACINGS SHOWN. POSTS ARE TO BE SET APPROXIMATELY RADIAL TO THE RAILING AT EACH POST LOCATION.

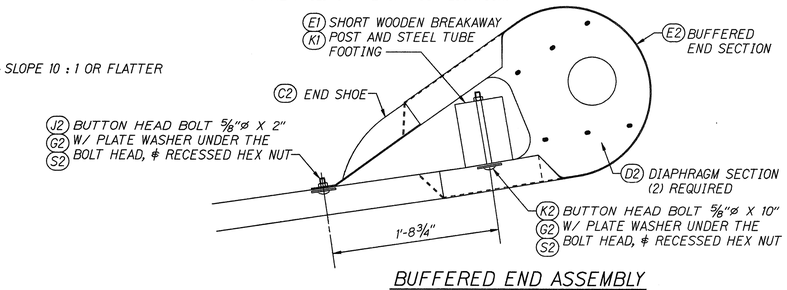


BUFFERED END ASSEMBLY

## SUMMARY OF COMPONENTS

| FIND NO. | DESCRIPTION |
|---|---|
| A1 | GUARDRAIL, 12GA X 12'-6" |
| B1 | GUARDRAIL, 12GA X 12'-6" |
| C1 | GUARDRAIL, 12GA X 12'-6" |
| D1 | BREAKAWAY LINE POST, TIMBER - 6" X 8" X 6'-0" |
| E1 | BREAKAWAY POST, TIMBER - 5½" X 7½" X 3'-6½" |
| G1 | BLOCK, TIMBER - 5½" X 7½" X 1'-2" |
| H1 | POST - W6 X 8.5 X 6'-0" |
| J1 | BLOCK - W6 X 8.5 X 1'-2" |
| K1 | SOIL TUBE - TS 8 X 6 X .188 X 5'-0" |
| L1 | CABLE ANCHOR BRACKET |
| M1 | BEARING PLATE |
| R1 | PIPE SPACER |
| S1 | SOIL PLATE |
| T1 | SHELF ANGLE |
| A2 | STRUT & YOKE ASSEMBLY |
| B2 | CABLE ASSEMBLY |
| C2 | END SHOE |
| D2 | DIAPHRAGM PLATE |
| E2 | BUFFERED END SECTION |
| G2 | WASHER, PLATE |
| H2 | BOLT, SPLICE ⅝"ø X 1¼" |
| J2 | BOLT, POST ⅝"ø X 2" |
| K2 | BOLT, POST ⅝"ø X 10" |
| L2 | BOLT, POST ⅝"ø X 18" |
| M2 | BOLT, HEX ⅝"ø X 1½" |
| N2 | BOLT, HEX ¾"ø X 7½" |
| R2 | BOLT, HEX ¾"ø X 10" |
| S2 | NUT, HEX, RECESSED ⅝"ø |
| T2 | NUT, HEX ⅝"ø |
| U2 | NUT, HEX ¾"ø |
| W2 | NUT, HEX 1"ø |
| X2 | WASHER, FLAT ⅝"ø |
| Y2 | WASHER, FLAT ¾"ø |
| Z2 | WASHER, FLAT 1"ø |

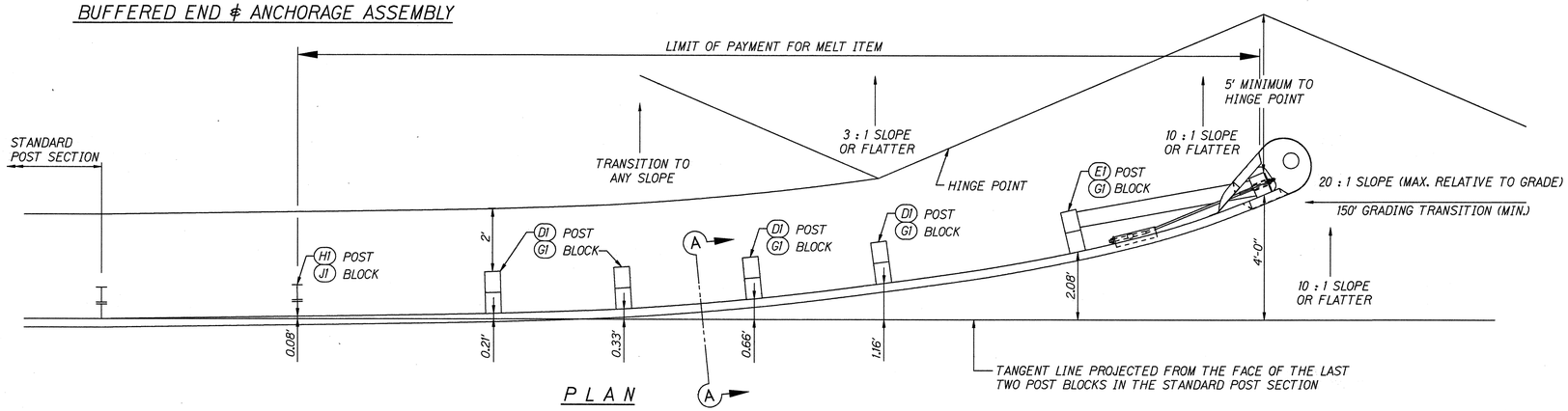


PLAN

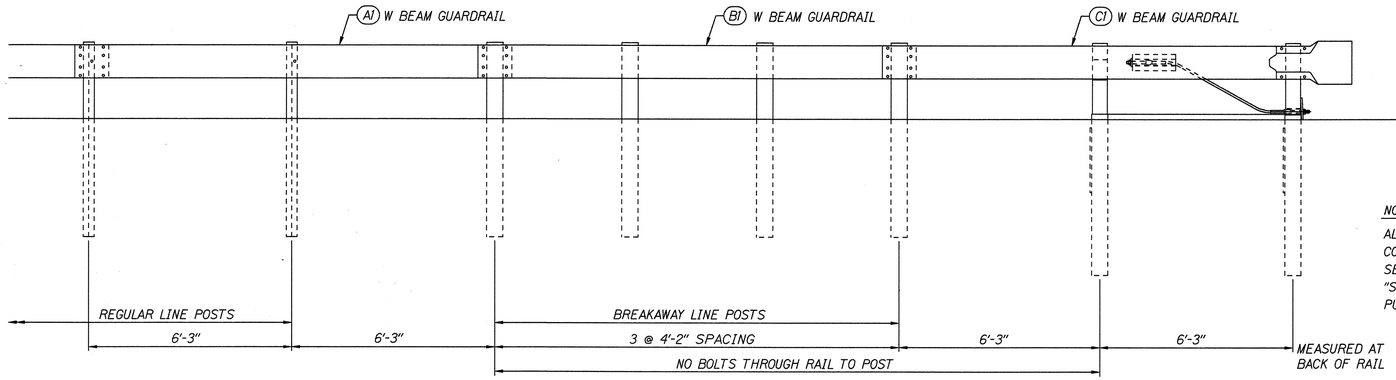


ELEVATION

NOTE:

ALL WOOD COMPONENTS SHALL BE TREATED TO CONFORM WITH ANY OF THE ACCEPTED METHODS IN SECTION 714 OF THE DEPARTMENT OF TRANSPORTATION "STANDARD SPECIFICATIONS FOR ROAD, BRIDGE, AND PUBLIC WORKS CONSTRUCTION", 1994.

| ORIGINAL PLAN | SURVEY PLOTTED BY | DATE 5/31/95 |
|---|---|---|
| | DRAWN BY J. | |
| | TRACED BY | |
| NOTE BOOK | DESIGNED BY X | |
| | QUANTITIES BY | |
| N. Ball/dgn | CHECKED BY | |

STATE OF HAWAII
DEPARTMENT OF TRANSPORTATION
HIGHWAYS DIVISION

**MODIFIED ECCENTRIC LOADER TERMINAL (MELT)**
**POST LAYOUT & ERECTION DETAILS**
LIKELIKE HIGHWAY RESURFACING
F.A. Project No. NH-063-1(19)
KALIHI STREET RESURFACING
F.A. Project No. STP-063-1(20)

Not to Scale — Date: Feb., 1995

SHEET No. 3 OF 5 SHEETS

| FED. ROAD DIST. NO. | STATE | FED. AID PROJ. NO. | FISCAL YEAR | SHEET NO. | TOTAL SHEETS |
|---|---|---|---|---|---|
| HAWAII | HAW. | NH-063-1(19)/ STP-063-1(20) | 1995 | 17 | 78 |

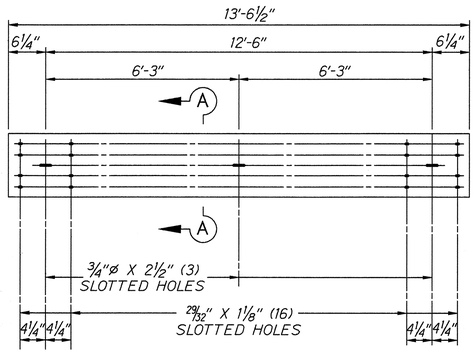


ONE - GUARDRAIL - A1

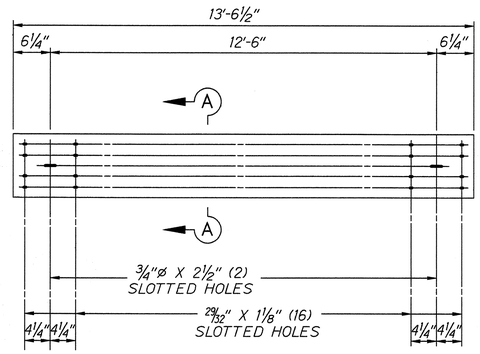


ONE - GUARDRAIL - B1

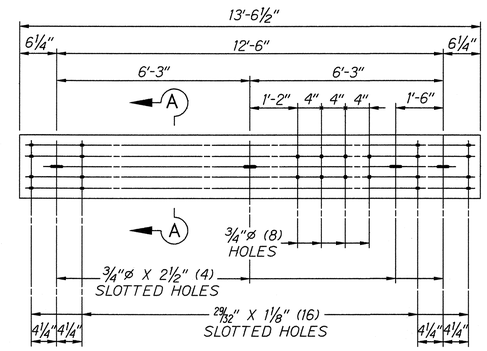


ONE - GUARDRAIL - C1

SECTION A - A

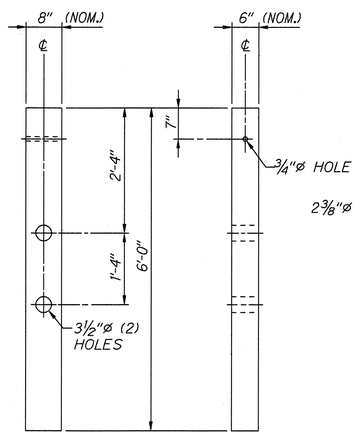


4 - WOOD POST - D1

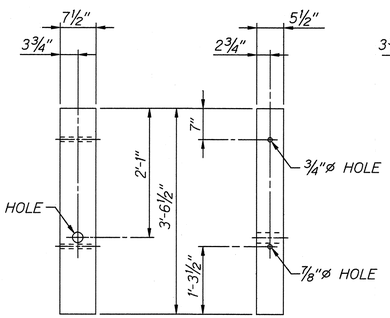


2 - WOOD POST - E1

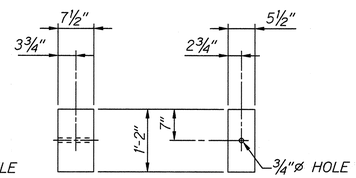


5 - WOOD BLOCK - G1

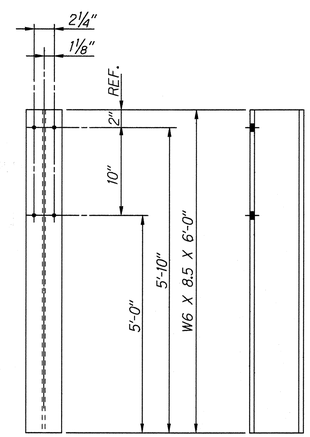


ONE - POST - H1

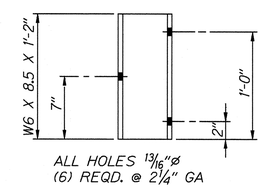


ONE - BLOCK - J1

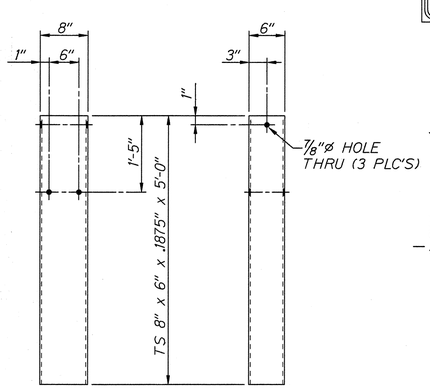


2 - SOIL TUBE - K1

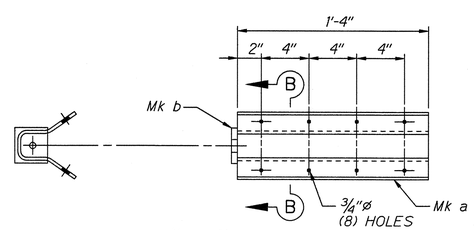


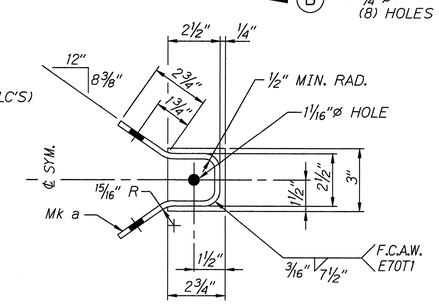


SECTION B - B

ONE - CABLE ANCHOR BRACKET - L1

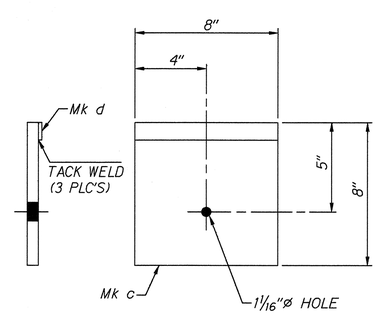


ONE - BEARING PLATE - M1

ONE - PIPE SPACER - R1

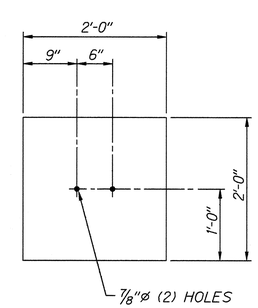


2 - SOIL PLATE - S1

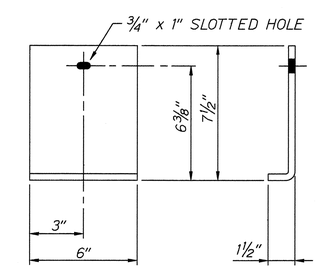


ONE - SHELF ANGLE - T1

## MATERIAL SCHEDULE

| FIND No. | PIECE MARK | MATERIAL | LENGTH FEET | LENGTH INCHES | WEIGHT | UNIT WEIGHT | REMARKS |
|---|---|---|---|---|---|---|---|
| A1 | | GUARDRAIL, W-BEAM | | | | 95.0 | A123 |
| | | 12 GA. W-BEAM GUARDRAIL | 12 | 6 | 89.0 | | M180 |
| B1 | | GUARDRAIL, W-BEAM | | | | 95.0 | A123 |
| | | 12 GA. W-BEAM GUARDRAIL | 12 | 6 | 89.0 | | M180 |
| C1 | | GUARDRAIL, W-BEAM | | | | 95.0 | A123 |
| | | 12 GA. W-BEAM GUARDRAIL | 12 | 6 | 89.0 | | M180 |
| D1 | | BREAKAWAY LINE POST | | | | 88.0 | |
| | | TIMBER POST 6 X 8 | 6 | 0 | 352.0 | | M168 |
| E1 | | BREAKAWAY POST, SHORT | | | | 44.6 | |
| | | TIMBER POST 5½X 7½ | 3 | 6½ | 89.2 | | M168 |
| G1 | | BLOCK | | | | 16.8 | |
| | | TIMBER BLOCK 5½X 7½ | 1 | 2 | 84.0 | | M168 |
| H1 | | POST | | | | 54.9 | A123 |
| | | W6 X 8.5 | 6 | 0 | 52.0 | | A36 |
| J1 | | BLOCK | | | | 11.0 | A123 |
| | | W6 X 8.5 | 1 | 2 | 10.1 | | A36 |
| K1 | | SOIL TUBE | | | | 88.9 | A123 |
| | | TS 8 X 6 X .1875 | 5 | 0 | 170.8 | | A500B |
| L1 | | CABLE ANCHOR BRACKET | | | | 19.3 | A123 |
| | a | PL¼X 12⅜ | 1 | 4 | 17.6 | | A36 |
| | b | PL½X 2¾ | 0 | 3 | 1.17 | | A36 |
| M1 | | BEARING PLATE | | | | 11.9 | A123 |
| | c | PL⅝X 8 | 0 | 8 | 11.3 | | A36 |
| | d | PL3/16X 1 | 0 | 8 | 0.4 | | A36 |
| R1 | | POST SLEEVE | | | | 1.76 | A123 |
| | | PIPE 2ø STD | 0 | 5½ | 1.67 | | A53 |
| S1 | | SOIL PLATE | | | | 84.8 | A123 |
| | | PL¼X 24 | 2 | 0 | 40.8 | | A36 |
| T1 | | SHELF ANGLE | | | | 3.7 | A123 |
| | | PL¼X 6 | 0 | 8½ | 3.61 | | A36 |
| | | | | | | | |

| ORIGINAL PLAN | SURVEY PLOTTED BY | DATE 5/31/95 |
|---|---|---|
| | DRAWN BY X | |
| | TRACED BY X | |
| NOTE BOOK | DESIGNED BY X | |
| | QUANTITIES BY | |
| N. 08/12/90 | CHECKED BY | |

STATE OF HAWAII
DEPARTMENT OF TRANSPORTATION
HIGHWAYS DIVISION

**MODIFIED ECCENTRIC LOADER TERMINAL (MELT)**
**COMPONENT DETAILS**
LIKELIKE HIGHWAY RESURFACING
F.A. Project No. NH-063-1(19)
KALIHI STREET RESURFACING
F.A. Project No. STP-063-1(20)

Not to Scale — Date: Feb., 1995

SHEET No. 4 OF 5 SHEETS

| FED. ROAD DIST. NO. | STATE | FED. AID PROJ. NO. | FISCAL YEAR | SHEET NO. | TOTAL SHEETS |
|---|---|---|---|---|---|
| HAWAII | HAW. | NH-063-1(19)/ STP-063-1(20) | 1995 | 18 | 78 |

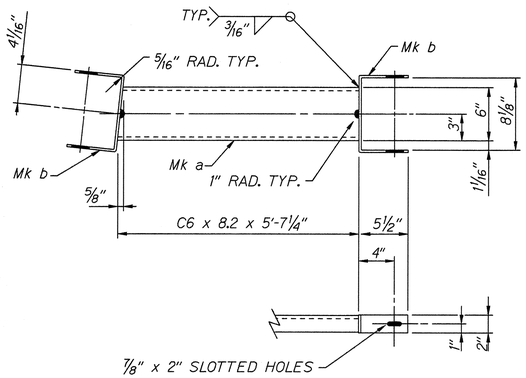


ONE - STRUT AND YOKE ASSEMBLY - A2

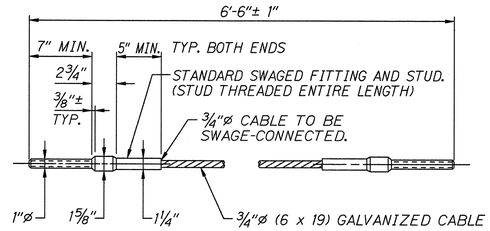


NOTES:

THE STUD SHALL CONFORM TO THE REQUIREMENTS OF A.S.T.M. A449 AND SHALL BE GALVANIZED IN ACCORDANCE WITH A.S.T.M. A153. THE THREADS SHALL HAVE A CLASS 2A FIT BEFORE GALVANIZING.

WIRE ROPE SHALL CONFORM TO THE REQUIREMENTS OF A.A.S.H.T.O. M-30 AND SHALL BE 3/4-INCH PREFORMED, 6 x 19, WIRE STRAND CORE OR INDEPENDENT WIRE ROPE CORE (IWRC), GALVANIZED, RIGHT REGULAR LAY, MANUFACTURED OF IMPROVED PLOW STEEL WITH A MINIMUM BREAKING STRENGTH OF 46,000 POUNDS.

THE SWAGED FITTING, STUD, AND NUT SHALL DEVELOP THE BREAKING STRENGTH OF THE WIRE ROPE.

ONE - CABLE ASSEMBLY - B2

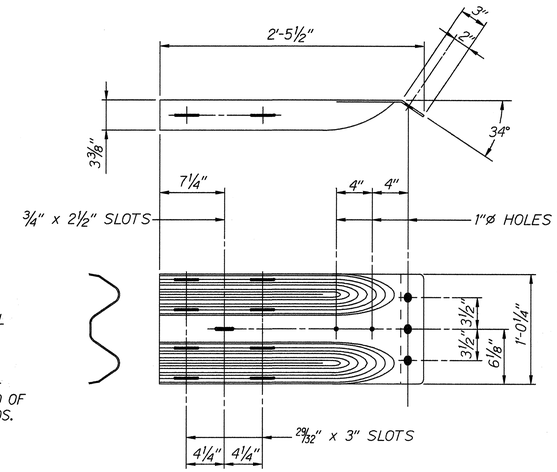


ONE - END SHOE - C2

## MATERIAL SCHEDULE

| FIND No. | PIECE MARK | MATERIAL | LENGTH FEET | LENGTH INCHES | WEIGHT | UNIT WEIGHT | REMARKS | |
|---|---|---|---|---|---|---|---|---|
| A2 | | STRUT AND YOKE ASSEMBLY | | | | 52.0 | | A123 |
| | a | C6 X 8.2 | 5 | 7 1/4 | 46.0 | | A36 | |
| | b | BAR 2 X 3/16 | 1 | 6 3/4 | 4.0 | | A36 | |
| B2 | | CABLE ASSEMBLY | | | | 9.6 | SEE NOTES | |
| | | 3/4"ø CABLE ASSEMBLY | 6 | 6 | | | SEE DETAIL | |
| C2 | | END SHOE | | | | 23.1 | | A123 |
| | | PL 10 GA. X 19 1/8 | 2 | 6 | 21.9 | | M180 | |
| D2 | | DIAPHRAGM PLATE | | | | 9.7 | | A123 |
| | | PL 12 GA. X 21 | 2 | 1 5/8 | 32.6 | | M180 | |
| E2 | | BUFFERED END SECTION | | | | 37.5 | | A123 |
| | | PL 12 GA. X 16 | 6 | 8 1/2 | 39.0 | | M180 | |
| G2 | | WASHER, PLATE | | | | .22 | | A123 |
| | | PL 3/16 X 1 3/4 | 0 | 3 | .56 | | A36 | |
| | | | | | | | | |
| | | | | | | | | |
| | | HARDWARE | | | | | | |
| H2 | | BOLT, SPLICE 5/8ø x 1 1/4 | | | | 6.3 | A307 | A153 |
| J2 | | BOLT, POST 5/8ø X 2 | | | | .44 | A307 | A153 |
| K2 | | BOLT, POST 5/8ø X 10 | | | | .88 | A307 | A153 |
| L2 | | BOLT, POST 5/8ø X 18 | | | | 7.75 | A307 | A153 |
| M2 | | BOLT, HEX 5/8ø X 1 1/2 | | | | 2.04 | A307 | A153 |
| N2 | | BOLT, HEX 3/4ø X 7 1/2 | | | | 4.2 | A307 | A153 |
| R2 | | BOLT, HEX 3/4ø X 10 | | | | 2.66 | A307 | A153 |
| S2 | | NUT, HEX, RECESSED 5/8ø | | | | 7.31 | A563 | A153 |
| T2 | | NUT, HEX 5/8ø | | | | 1.3 | A563 | A153 |
| U2 | | NUT, HEX 3/4ø | | | | .72 | A563 | A153 |
| W2 | | NUT, HEX 1ø | | | | .57 | A563 | A153 |
| X2 | | WASHER, FLAT 5/8ø | | | | .75 | F844 | A123 |
| Y2 | | WASHER, FLAT 3/4ø | | | | .95 | F844 | A123 |
| Z2 | | WASHER, FLAT 1ø | | | | .29 | F844 | A123 |

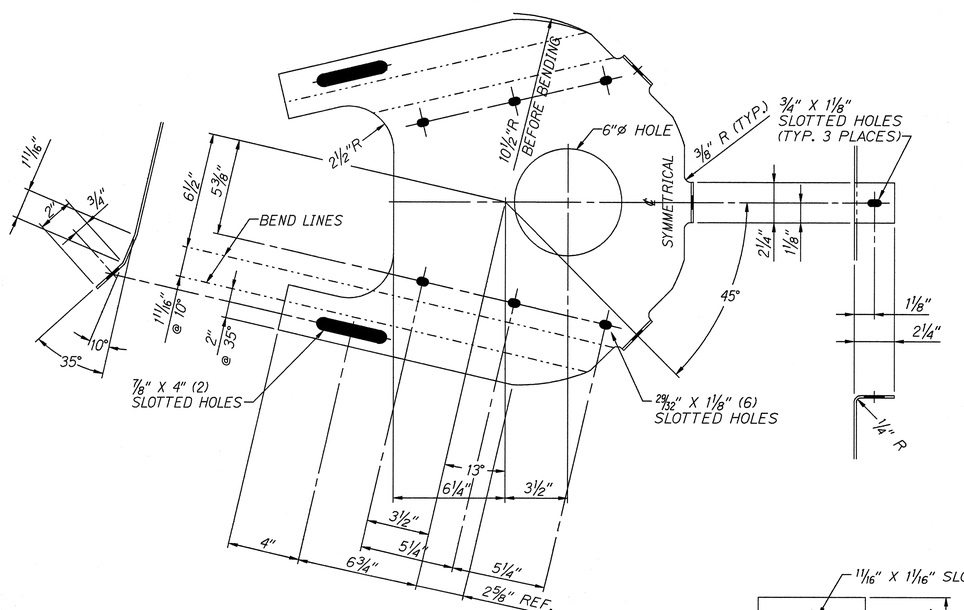


2 - DIAPHRAGM PLATE - D2

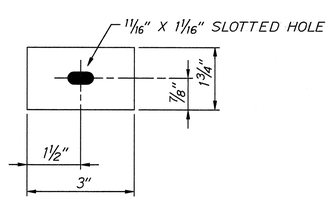


2 - WASHERS, PLATE - G2

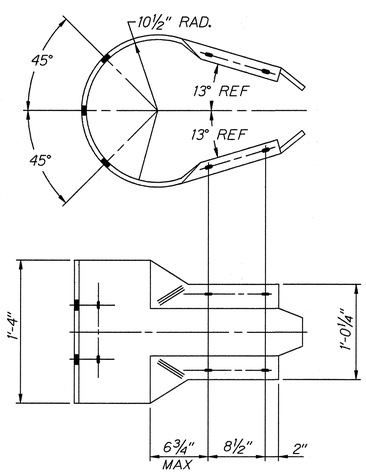


ONE - BUFFERED END SECTION - E2

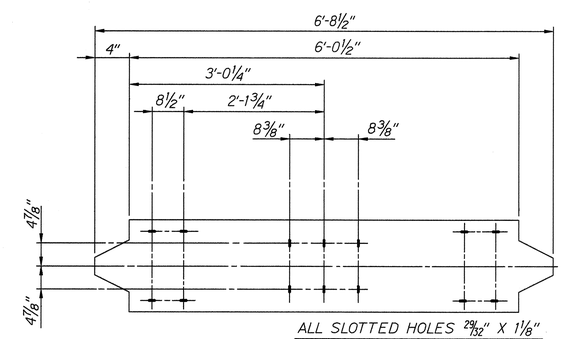


BUFFERED END SECTION, FLAT PLATE LAYOUT

| | | |
|---|---|---|
| ORIGINAL PLAN | SURVEY PLOTTED BY | DATE |
| | DRAWN BY X | |
| | TRACED BY X | 12/30/95 |
| NOTE BOOK | DESIGNED BY X | |
| | QUANTITIES BY | |
| N. mel13.dgn | CHECKED BY | |

STATE OF HAWAII
DEPARTMENT OF TRANSPORTATION
HIGHWAYS DIVISION

**MODIFIED ECCENTRIC LOADER TERMINAL (MELT)**
**COMPONENT DETAILS**
LIKELIKE HIGHWAY RESURFACING
F.A. Project No. NH-063-1(19)
KALIHI STREET RESURFACING
F.A. Project No. STP-063-1(20)

Not to Scale — Date: Feb., 1995

SHEET No. 5 OF 5 SHEETS