FED. ROAD DIST. NO.	STATE	FED. AID PROJ. NO.	FISCAL YEAR	SHEET NO.	TOTAL SHEETS
HAWAII	HAW.	F-063-1(17)	1984	98	156

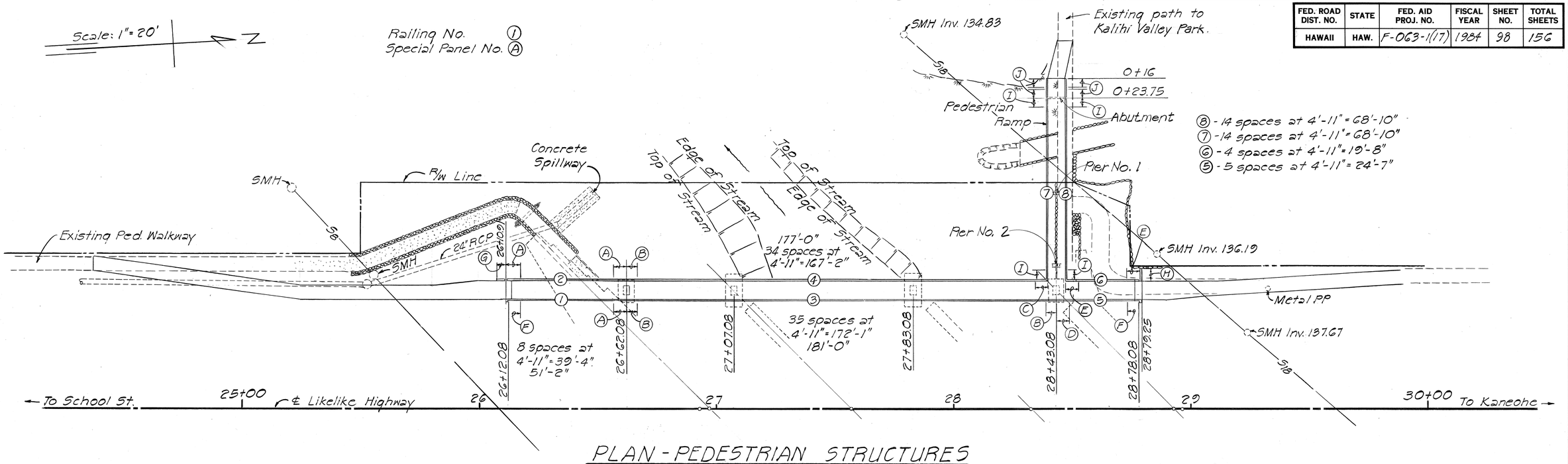

PLAN - PEDESTRIAN STRUCTURES

Scale: 1" = 20'

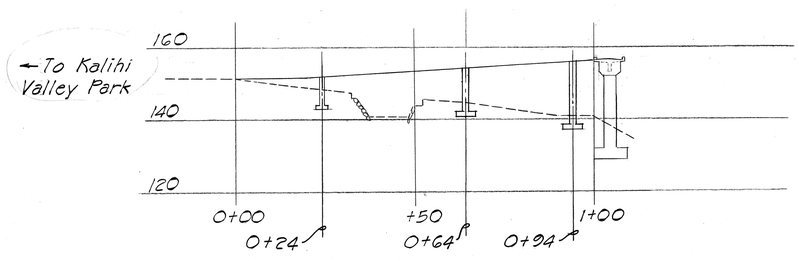

ELEVATION - PEDESTRIAN RAMP @ STA. 28+43.08

Scale: 1" = 20'

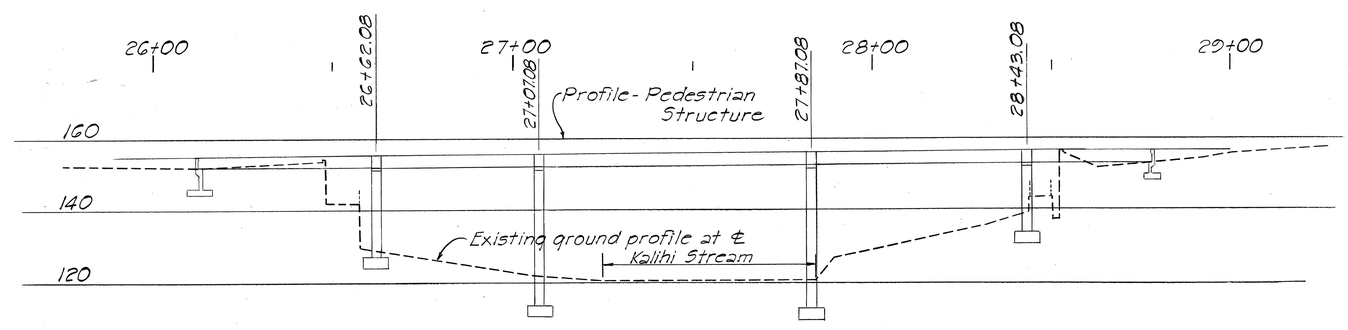

ELEVATION ~ PEDESTRIAN STRUCTURE

Scale: 1" = 20'

ORIGINAL PLAN	SURVEY PLOTTED BY	DATE
	DRAWN BY	
	TRACED BY	
NOTE BOOK	DESIGNED BY	
	QUANTITIES BY	
No.	CHECKED BY	

THOMAS C. H. LUM REGISTERED PROFESSIONAL ENGINEER No. 12155-S HAWAII, U.S.A.

THIS WORK WAS PREPARED BY ME OR UNDER MY SUPERVISION.

Signature

STATE OF HAWAII
DEPARTMENT OF TRANSPORTATION
HIGHWAYS DIVISION

PLAN & ELEVATION OF PEDESTRIAN STRUCTURES

LIKELIKE HIGHWAY IMPROVEMENTS

KAM IV ROAD TO VICINITY OF KALIHI STREET
F. A. PROJ. NO. F-063-1(17)
Scale as shown

SHEET No. 13 OF 22 SHEETS

FED. ROAD DIST. NO.	STATE	FED. AID PROJ. NO.	FISCAL YEAR	SHEET NO.	TOTAL SHEETS
HAWAII	HAW.	F-063-1(17)	1984	99	156

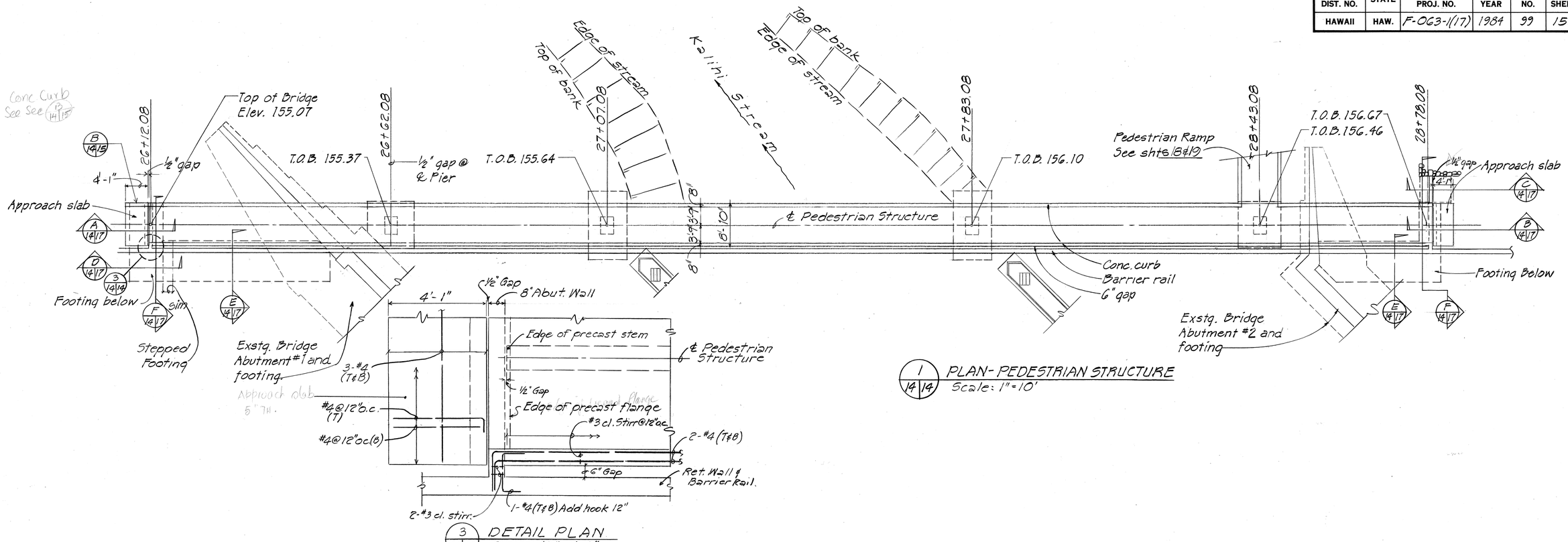

1 / 14 14 PLAN- PEDESTRIAN STRUCTURE
Scale: 1" = 10'

3 / 14 14 DETAIL PLAN
Scale: ½" = 1'-0"

2 / 14 14 ELEVATION ~ PEDESTRIAN STRUCTURE
Scale: 1" = 10'-0"

Note: All pier footings to bear on solid rock having bearing pr. 6000 p.s.f. minimum.

ORIGINAL PLAN	SURVEY PLOTTED BY	DATE
	DRAWN BY	
	TRACED BY	
NOTE BOOK	DESIGNED BY	
	QUANTITIES BY	
No.	CHECKED BY	

THOMAS C. H. LUM REGISTERED PROFESSIONAL ENGINEER No. 12153 HAWAII, U.S.A.

THIS WORK WAS PREPARED BY ME OR UNDER MY SUPERVISION.

Signature

STATE OF HAWAII
DEPARTMENT OF TRANSPORTATION
HIGHWAYS DIVISION

PLAN & ELEVATION
FOR PEDESTRIAN STRUCTURE
LIKELIKE HIGHWAY IMPROVEMENTS
KAM IV ROAD TO VICINITY OF KALIHI STREET
F.A. PROJ. NO. F-063-1(17)

SHEET No. 14 OF 22 SHEETS

FED. ROAD DIST. NO.	STATE	FED. AID PROJ. NO.	FISCAL YEAR	SHEET NO.	TOTAL SHEETS
HAWAII	HAW.	F-063-1(17)	1984	100	156

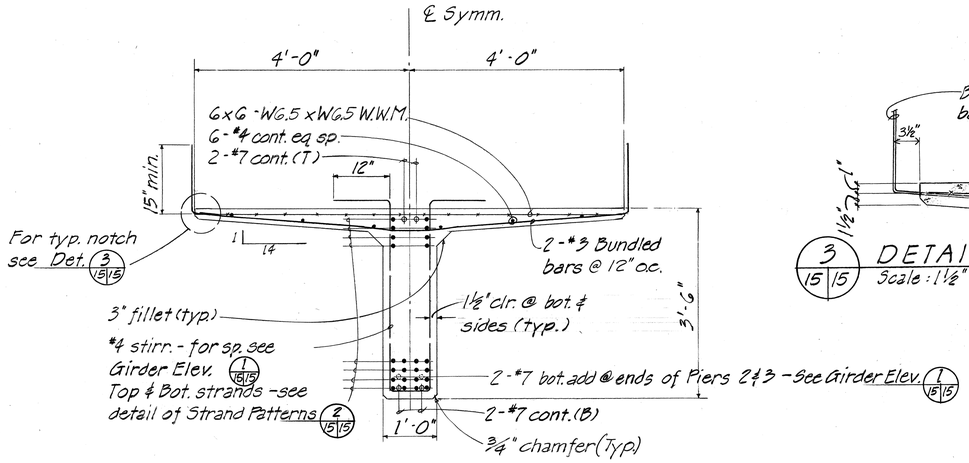

A 15/15 SECTION
TYPICAL PRECAST PRESTRESSED CONC. GIRDER
Sc: ¾"=1'-0"

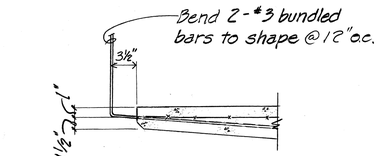

3 15/15 DETAIL
Scale: 1½"=1'-0"

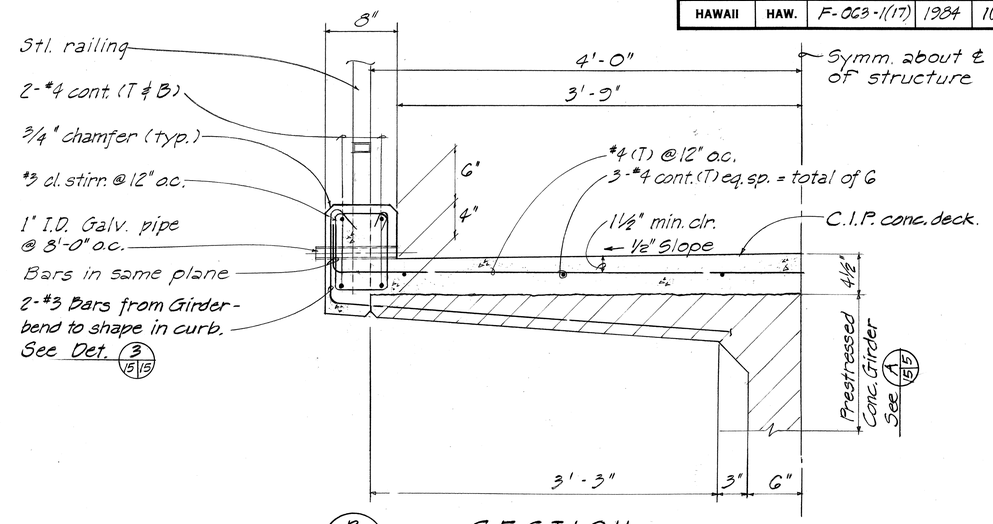

B 15/15 SECTION
TYPICAL PRECAST CONC. GIRDER w/ CAST IN PLACE DECK & CURB
Sc: 1½"=1'-0"

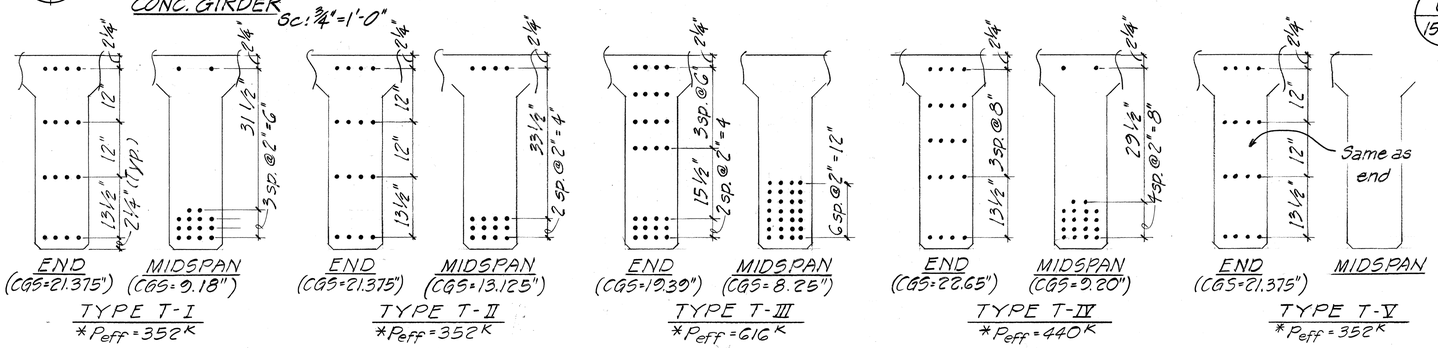

2 15/15 DETAIL of STRAND PATTERNS
Refer to Girder Elevation Below

*Peff = Effective Prestressing Force.
CGS = Center of Gravity of Strands.

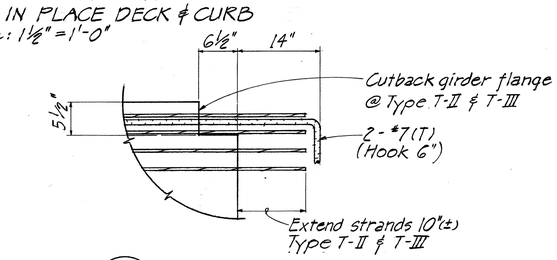

4 15/15 DETAIL
Sc: 1'-0"

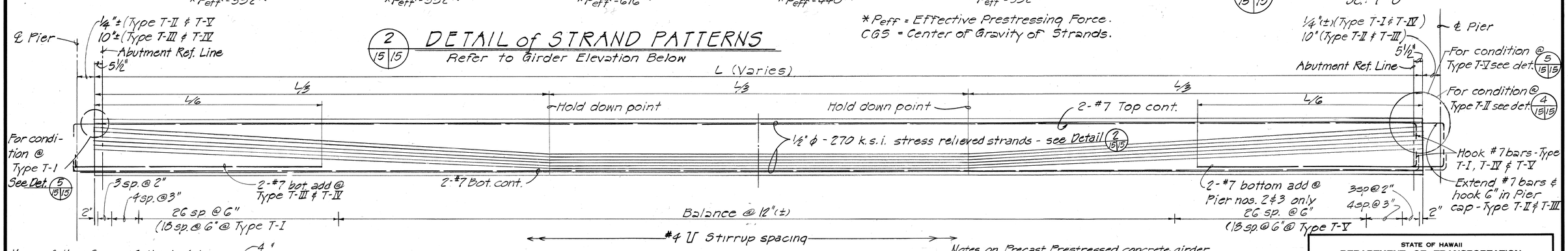

1 15/15 PRECAST CONC GIRDER ELEVATION
STRAND PROFILE & STIRRUP LOCATION
Scale: ⅜"=1'-0"

Note: Reinforcing steel to be grade 60 except stirrups which will be grade 40.

Notes on Precast Prestressed concrete girder
1. Concrete compressive strength @ 28 days, Fc' = 6,000 p.s.i.
2. Concrete strength @ time of release, Fci = 4,500 p.s.i.
3. Prestressing tendons shall be standard 7-wire stress relieved strands with an ultimate tensile strength of 270,000 p.s.i.
   Tensioning load. = 28,910 lbs. per strand
   Design load = 22,020 lbs. per strand
4. C.I.P. topping, Fc' = 4,000 p.s.i.

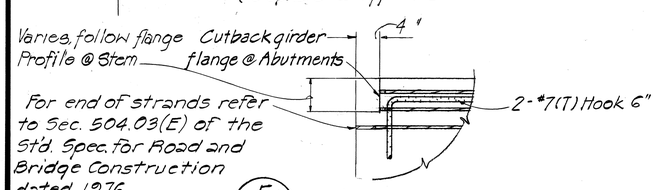

5 15/15 DETAIL
Sc: 1"=1'-0"

THIS WORK WAS PREPARED BY ME OR UNDER MY SUPERVISION.
Signature
THOMAS C. H. LIM REGISTERED PROFESSIONAL ENGINEER No. 12-5-5 HAWAII, U.S.A.

STATE OF HAWAII
DEPARTMENT OF TRANSPORTATION
HIGHWAYS DIVISION

TYPICAL GIRDER & CAST-IN-PLACE DECK AND CURB SECTION FOR PEDESTRIAN STRUCTURE

LIKELIKE HIGHWAY
KAM IV ROAD TO VICINITY OF KALIHI STREET
F.A. PROJ. NO. F-063-1(17)

SHEET No. 15 OF 22 SHEETS

ORIGINAL PLAN | SURVEY PLOTTED BY | DRAWN BY | TRACED BY | DESIGNED BY | QUANTITIES BY | CHECKED BY | DATE | NOTE BOOK | No.

FED. ROAD DIST. NO.	STATE	FED. AID PROJ. NO.	FISCAL YEAR	SHEET NO.	TOTAL SHEETS
HAWAII	HAW.	F-063-1(17)	1984	101	156

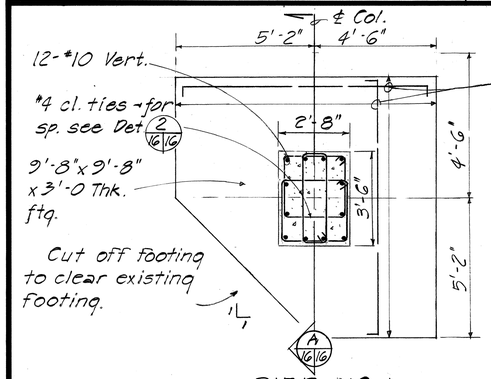

PIER NO. 1
Scale: 3/8"=1'-0"

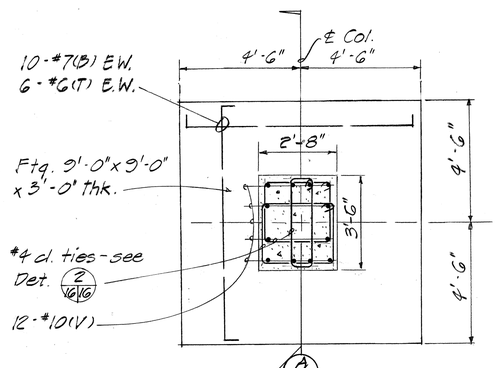

PIER NO. 4
Scale: 3/8"=1'-0"

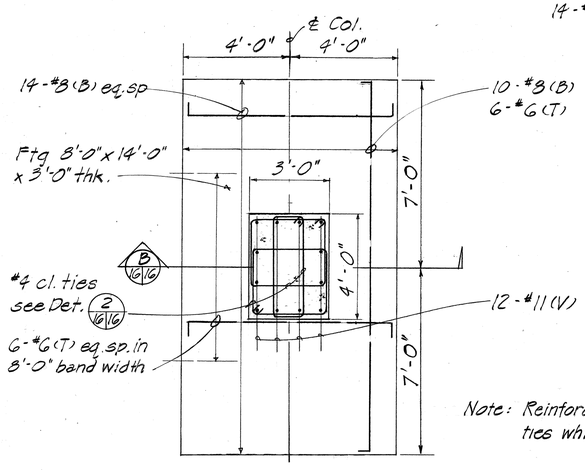

PIER NOS. 2 & 3
Scale: 3/8"=1'-0"

1/16/16 PLAN ~ PIER & PIER FTG's

Note: Reinforcing steel to be grade 60 except ties which will be grade 40.

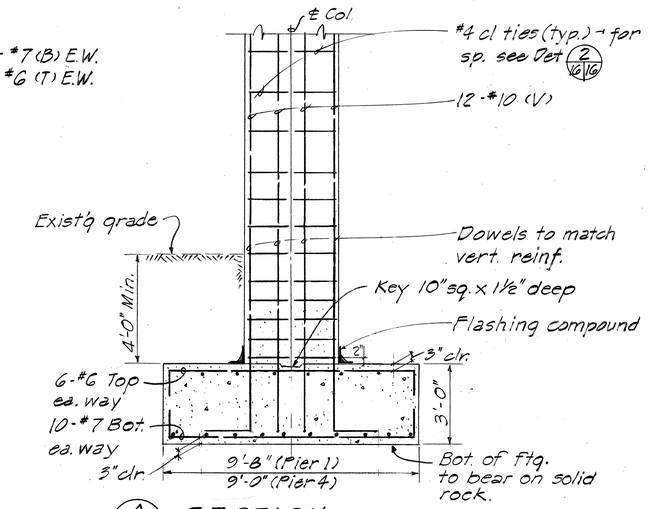

A/16/16 SECTION
PIER Nos. 1 & 4
Scale: 3/8"=1'-0"

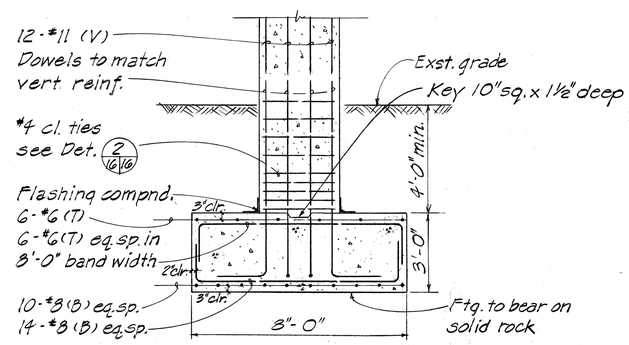

B/16/16 SECTION
PIER Nos. 2 & 3
Scale: 3/8"=1'-0"

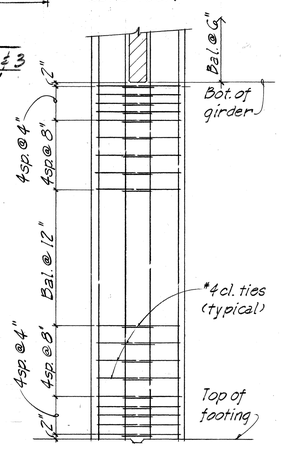

2/16/16 TIE SPACING IN PIER (TYP.)
n.t.s.

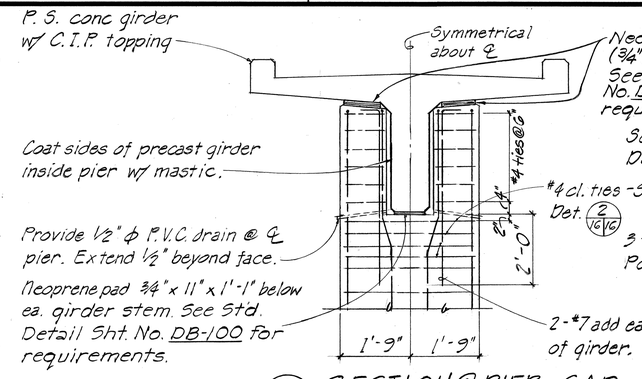

C/16/16 SECTION @ PIER CAP
Pier nos. 1 & 4 n.t.s.

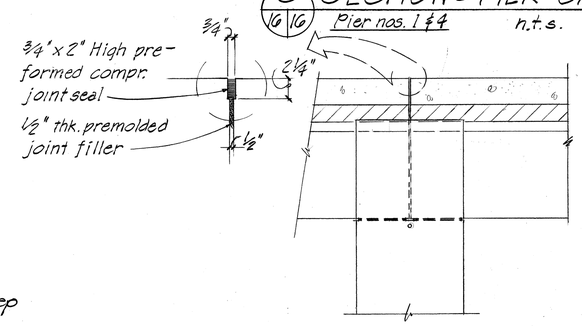

3/16/16 ELEV. @ PIER CAP
Pier nos. 1 & 4 n.t.s.

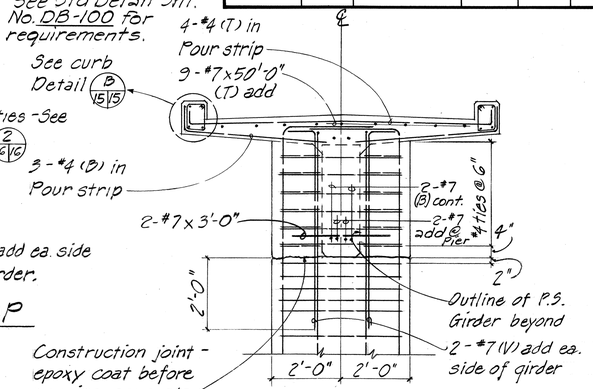

D/16/16 SECTION @ PIER CAP
Pier nos. 2 & 3 Sc: 3/8"=1'-0"

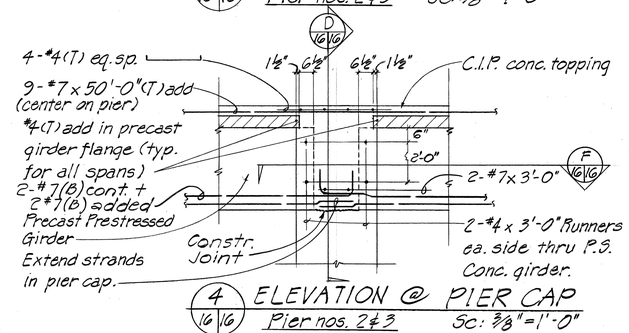

4/16/16 ELEVATION @ PIER CAP
Pier nos. 2 & 3 Sc: 3/8"=1'-0"

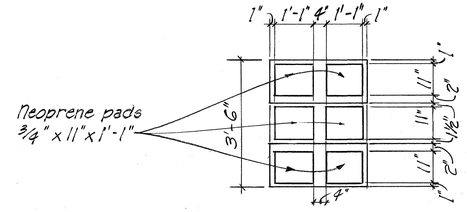

5/16/16 BRG. PAD LAYOUT
Pier nos. 1 & 4 n.t.s.

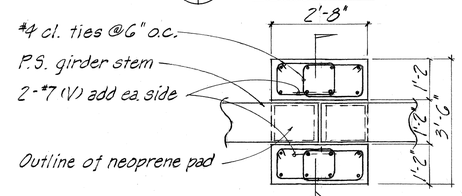

PLAN @ PIER TOP
Pier nos. 1 & 4 n.t.s.

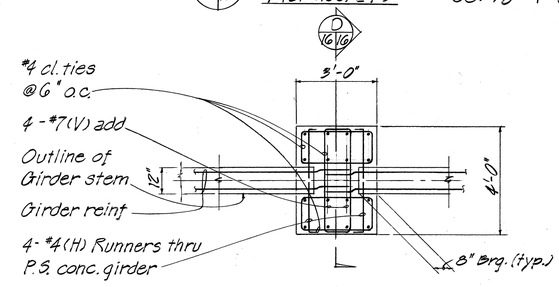

PLAN @ PIER TOP
Pier nos. 2 & 3 Sc: 3/8"=1'-0"

PIER DETAILS
Scale as shown

THOMAS C. H. LUM REGISTERED PROFESSIONAL ENGINEER No. 12155-S HAWAII, U.S.A.

THIS WORK WAS PREPARED BY ME OR UNDER MY SUPERVISION.

Signature

STATE OF HAWAII
DEPARTMENT OF TRANSPORTATION
HIGHWAYS DIVISION

PIER & FOOTING DETAILS
FOR PEDESTRIAN STRUCTURE
LIKELIKE HIGHWAY IMPROVEMENTS
KAM IV ROAD TO VICINITY OF KALIHI STREET
F.A. PROJ. NO. F-063-1(17)
Scale as shown

SHEET No. 16 OF 22 SHEETS

ORIGINAL PLAN | SURVEY PLOTTED BY | DRAWN BY | TRACED BY | DESIGNED BY | QUANTITIES BY | CHECKED BY | DATE | NOTE BOOK | No.

FED. ROAD DIST. NO.	STATE	FED. AID PROJ. NO.	FISCAL YEAR	SHEET NO.	TOTAL SHEETS
HAWAII	HAW.	F-063-1(17)	1984	102	156

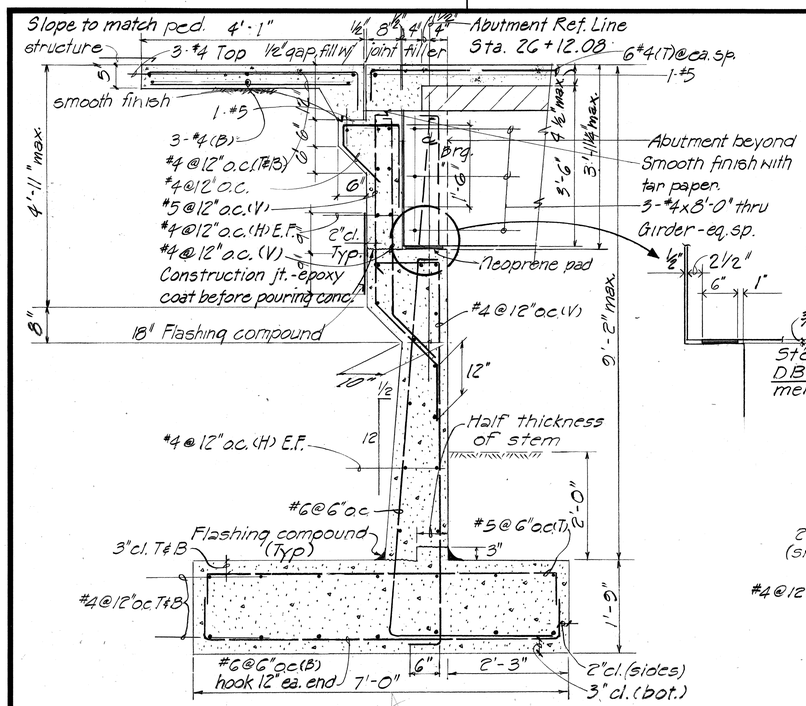

A 14|17 SECTION @ LEFT ABUTMENT
Scale: 3/4"=1'-0"

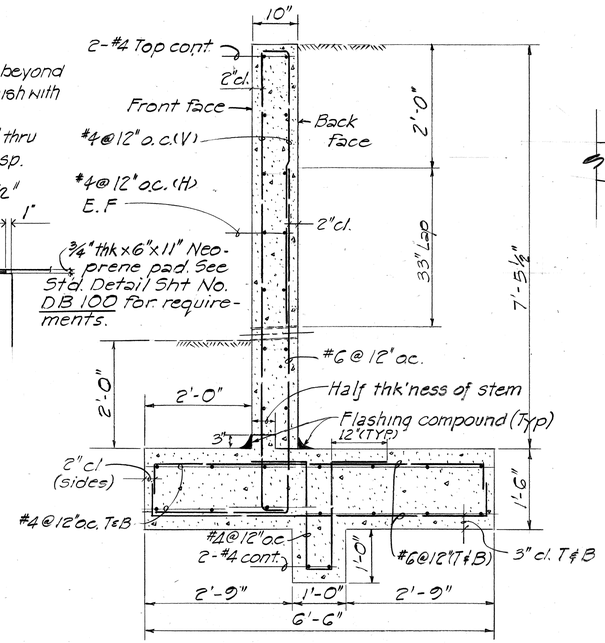

C 14|17 SECTION
Scale: 3/4"=1'-0"

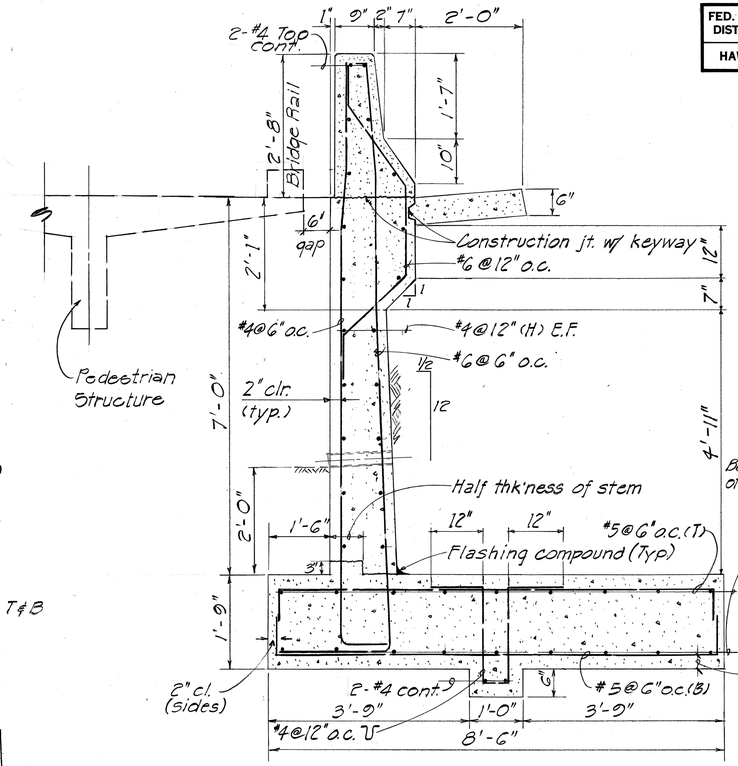

E 14|17 SECTION ~ RETAINING WALL
Scale: 3/4"=1'-0"

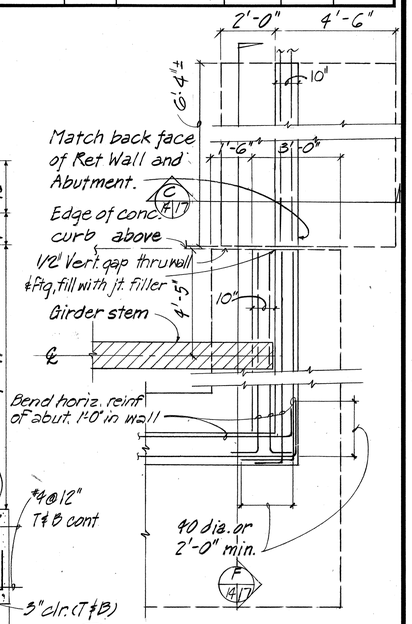

G 17|17 PLAN @ RIGHT ABUTMENT & RETAINING WALLS
(PLAN @ LEFT ABUTMENT SIM.)
Scale: 3/8"=1'-0"

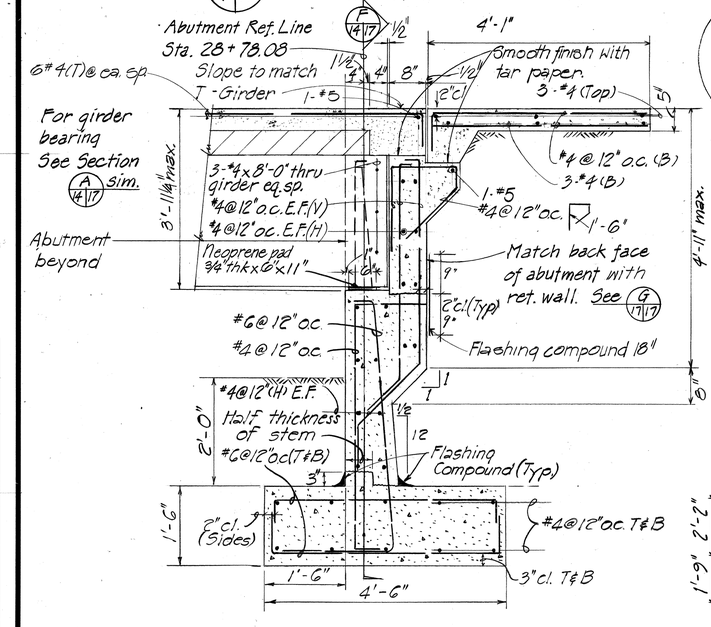

B 14|17 SECTION @ RIGHT ABUTMENT
Scale: 3/4"=1'-0"

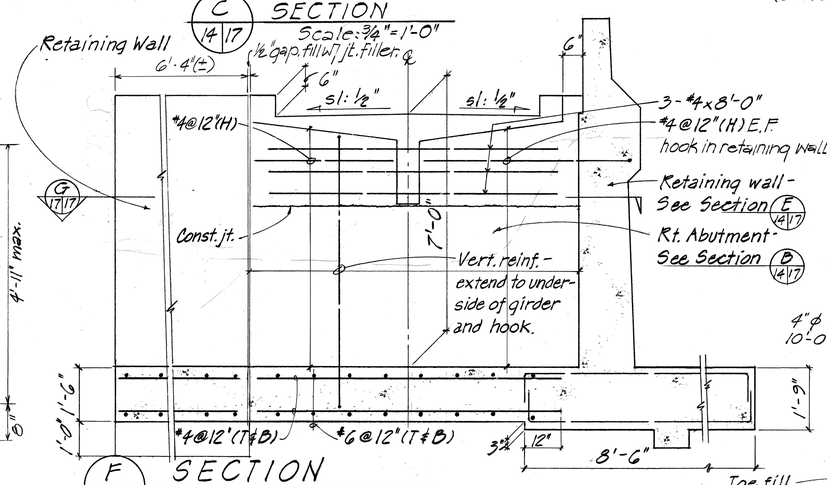

F 14|17 SECTION
Sc: 1/2" = 1'-0"

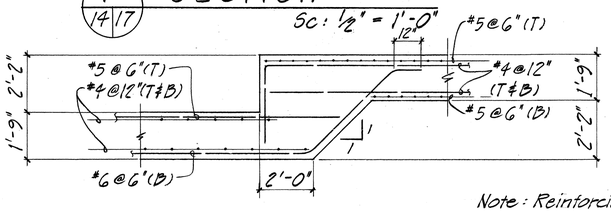

D 14|17 SECTION @ STEP FTG.
(LEFT ABUTMENT)
Scale: 3/8" = 1'-0"

Note: Reinforcing steel to be grade 60.

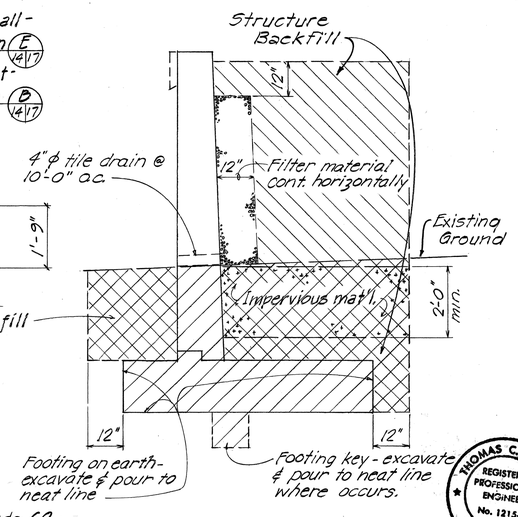

I 17|17 DETAIL (TYP.)
Excavation and Backfill for Retaining Wall & Abutment

NOTE:
1. Hatched areas denote limits of structure excavation payline. All other excavation shall be Roadway Excavation except as otherwise noted.
2. Hatched area denotes limits of Structure Backfill.
3. Impervious material as selected by the Engineer, shall be incidental to Structure Excavation. The subgrade upon which filter material is to be placed shall be made as impervious as possible by pneumatic tamping or other approved methods.

THIS WORK WAS PREPARED BY ME OR UNDER MY SUPERVISION.
Signature

THOMAS C. H. LUM REGISTERED PROFESSIONAL ENGINEER No. 1215-S HAWAII, U.S.A.

STATE OF HAWAII
DEPARTMENT OF TRANSPORTATION
HIGHWAYS DIVISION

ABUTMENTS & RETAINING WALLS FOR PEDESTRIAN STRUCTURE
LIKELIKE HIGHWAY IMPROVEMENTS
KAM IV ROAD TO VICINITY OF KALIHI STREET
F.A. PROJ. NO. F-063-1(17)
Scale as shown

SHEET No. 17 OF 22 SHEETS

ORIGINAL PLAN | SURVEY PLOTTED BY | DRAWN BY | TRACED BY | DESIGNED BY | QUANTITIES BY | CHECKED BY | DATE
NOTE BOOK | No.

FED. ROAD DIST. NO.	STATE	FED. AID PROJ. NO.	FISCAL YEAR	SHEET NO.	TOTAL SHEETS
HAWAII	HAW.	F-063-1(17)	1984	103	156

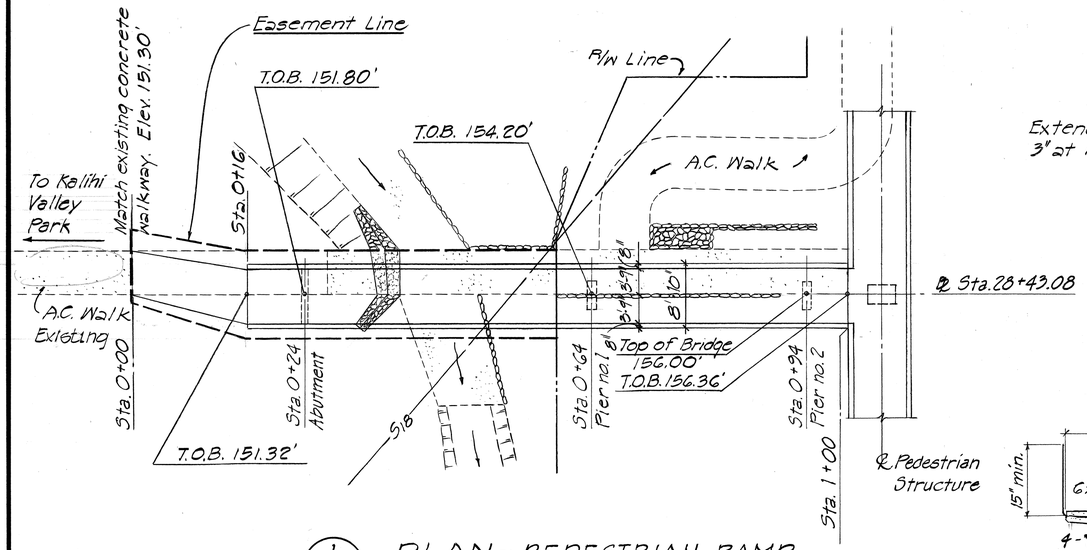

1 / 18 18 PLAN ~ PEDESTRIAN RAMP
Scale: 1" = 10'

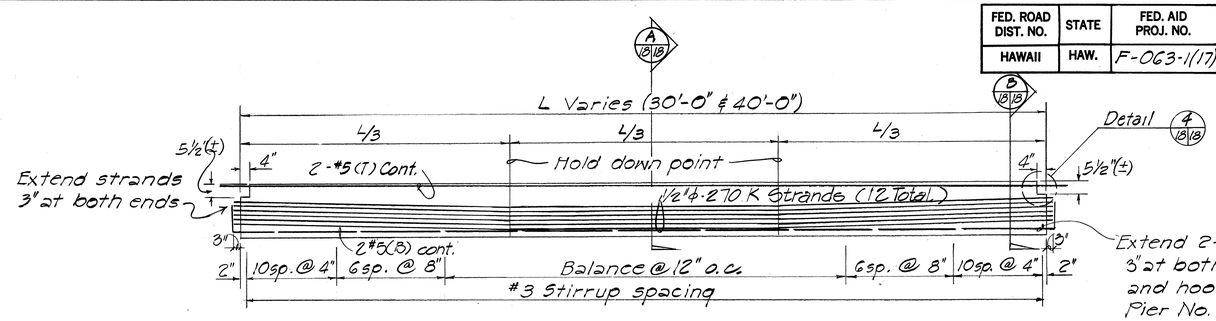

3 / 18 18 PRECAST PRESTRESSED CONC. GIRDER ELEV.
STRAND PROFILE & STIRRUP LOCATION
Scale: 3/8" = 1'-0"

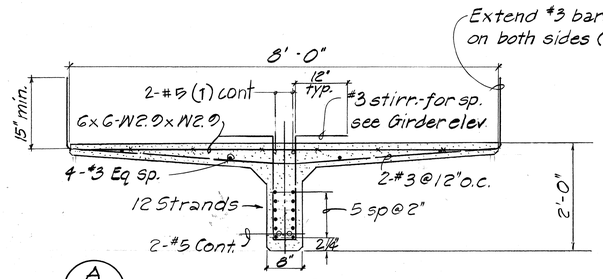

A / 18 18 SECTION @ MID-SPAN

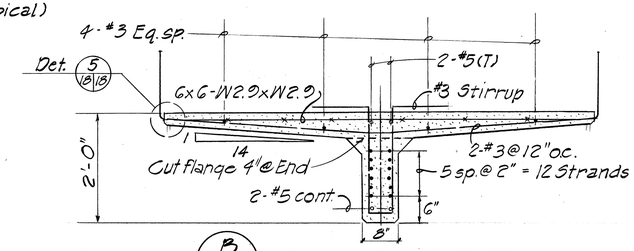

B / 18 18 SECTION @ END

TYPICAL GIRDER SECTIONS
30'-0" & 40'-0" SPANS
Scale: 3/4" = 1'-0"

NOTE:
Shore Precast Girder at midspan of 40'-0" span only.

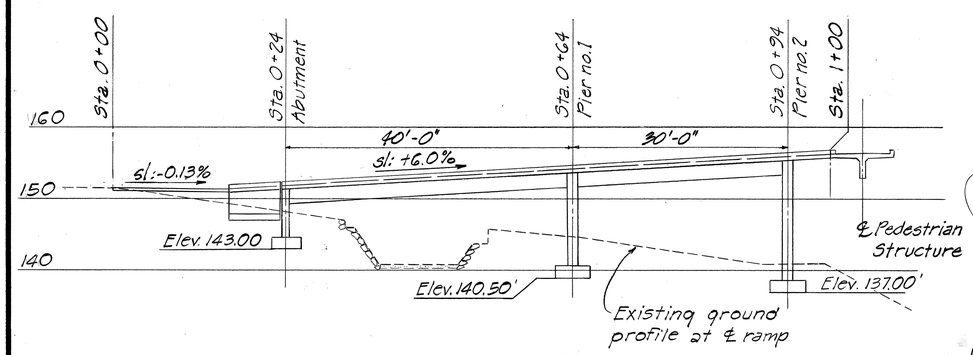

(Note: Allowable soil bearing pressure below footings shall be 4000 p.s.f. min.)

2 / 18 18 ELEVATION ~ PEDESTRIAN RAMP
Sc: 1" = 10'-0"

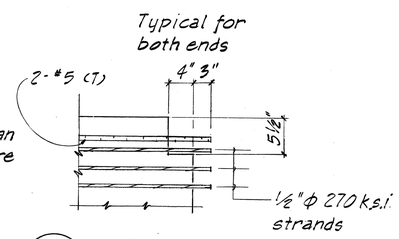

4 / 18 18 DETAIL
Sc: 1" = 1'-0"

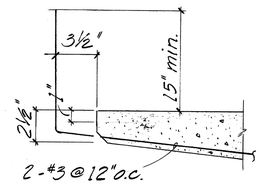

5 / 18 18 DETAIL
no scale

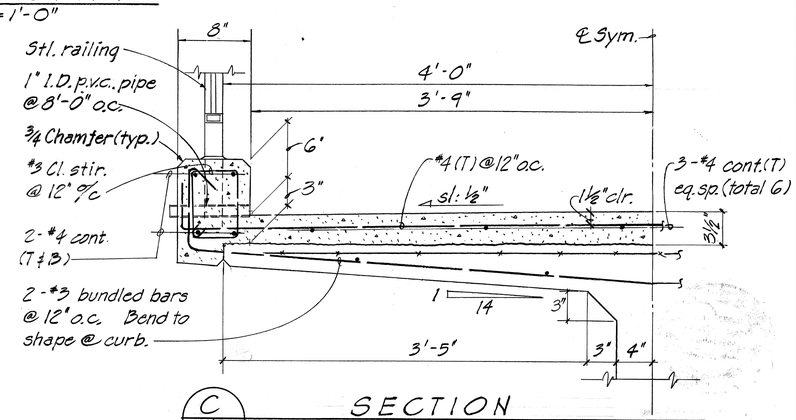

C / 18 18 SECTION
TYPICAL PRECAST PRESTRESSED CONCRETE GIRDER with CAST IN PLACE DECK

Notes:

1. For notes on Precast Prestressed girder see sht. 15

ORIGINAL PLAN	SURVEY PLOTTED BY	DATE
	DRAWN BY	"
	TRACED BY	"
NOTE BOOK	DESIGNED BY	"
	QUANTITIES BY	"
No.	CHECKED BY	"

THOMAS C. H. LUM REGISTERED PROFESSIONAL ENGINEER No. 12155-S HAWAII, U.S.A.

THIS WORK WAS PREPARED BY ME OR UNDER MY SUPERVISION.
Signature

STATE OF HAWAII
DEPARTMENT OF TRANSPORTATION
LAND TRANSPORTATION FACILITIES DIVISION
PLAN & ELEVATION, GIRDER SECTIONS & DETAILS FOR PEDESTRIAN RAMP

LIKELIKE HIGHWAY IMPROVEMENTS.
KAM IV ROAD TO VICINITY OF KALIHI STREET
F.A. PROJ. NO. F-063-1(17)

SHEET No. 18 OF 22 SHEETS

FED. ROAD DIST. NO.	STATE	FED. AID PROJ. NO.	FISCAL YEAR	SHEET NO.	TOTAL SHEETS
HAWAII	HAW.	F-063-1(17)	1984	104	156

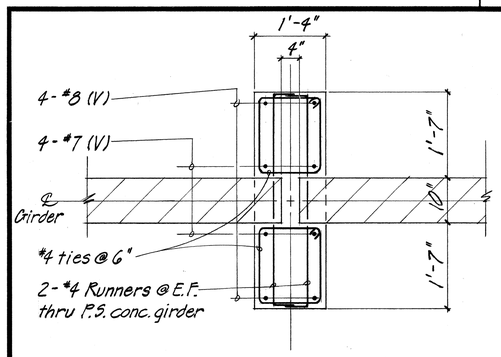

A 19|19 PLAN - PIER 1 @ TOP
Sc: 3/4"=1'-0"

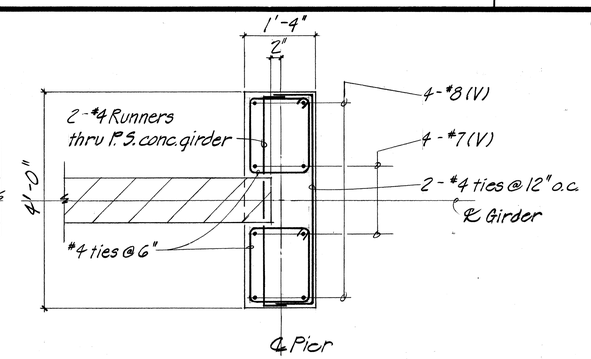

B 19|19 PLAN - PIER 2 @ TOP
Sc: 3/4"=1'-0"

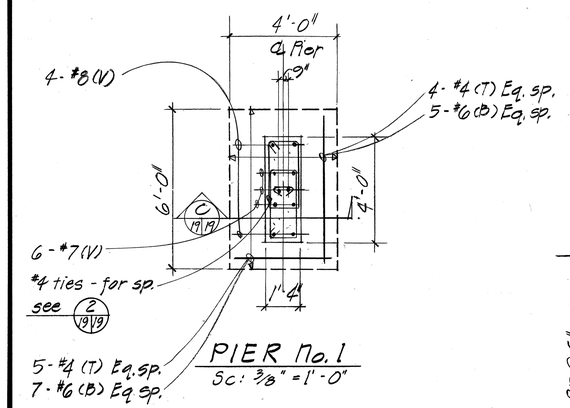

PIER No. 1
Sc: 3/8" = 1'-0"

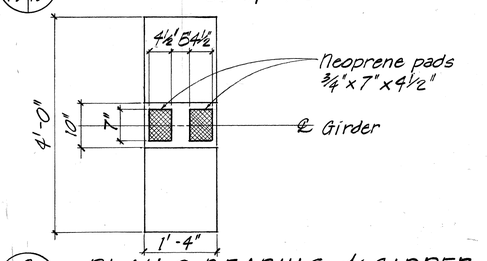

3 19|19 PLAN @ BEARING of GIRDER
Pier 1 (Pier 2 sim.) Sc: 3/4"=1'-0"

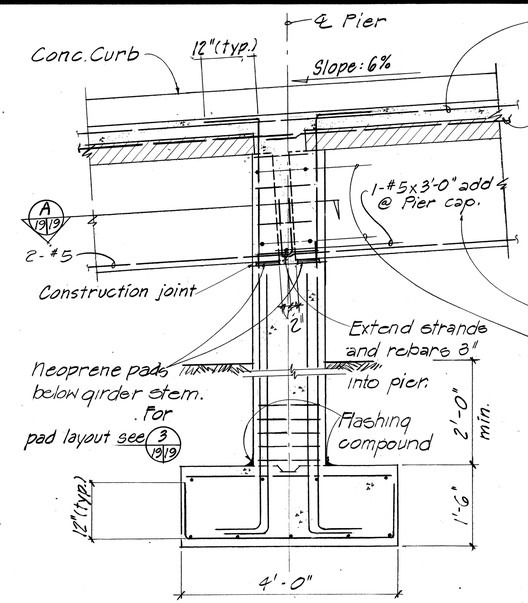

C 19|19 SECTION ~ PIER No. 1
Sc: 3/4" = 1'-0"

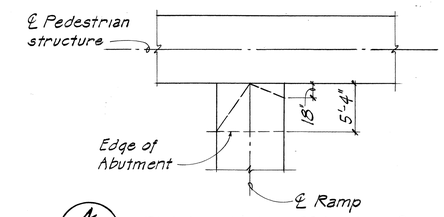

4 19|19 PLAN ~ RAMP INTERSECTION @ PEDESTRIAN STRUCTURE
N.T.S

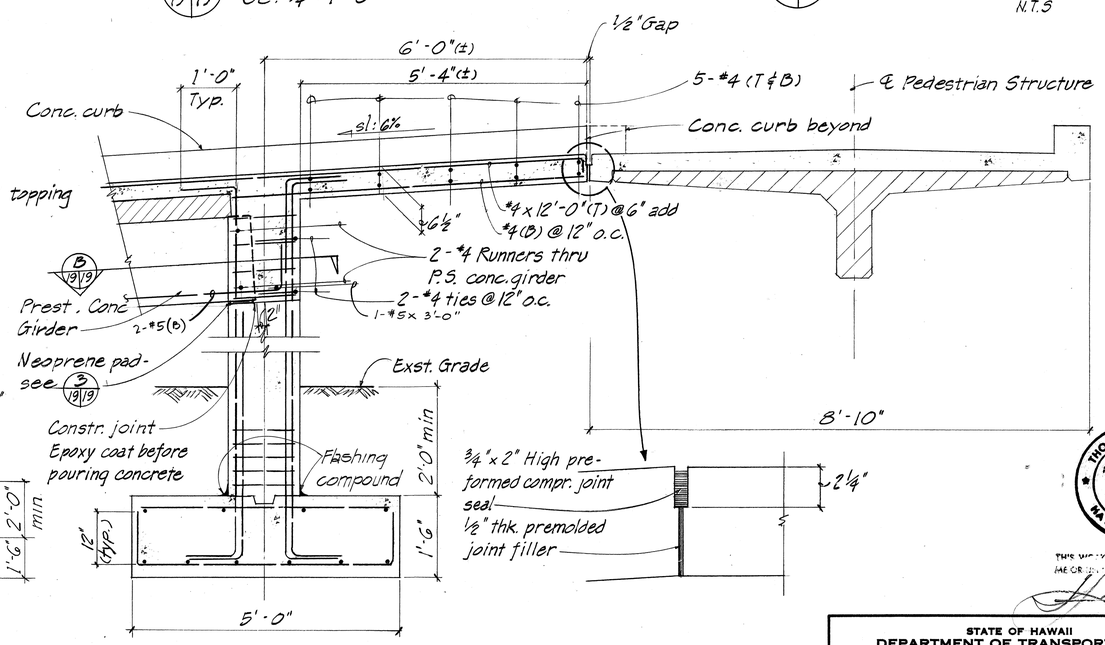

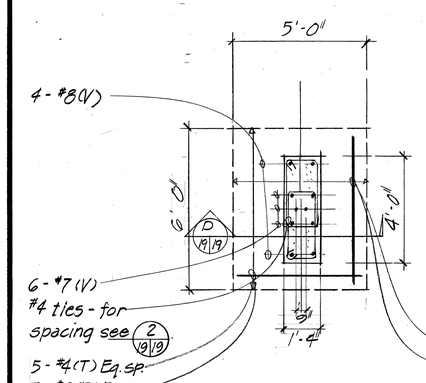

PIER No. 2
Sc: 3/8" = 1'-0"

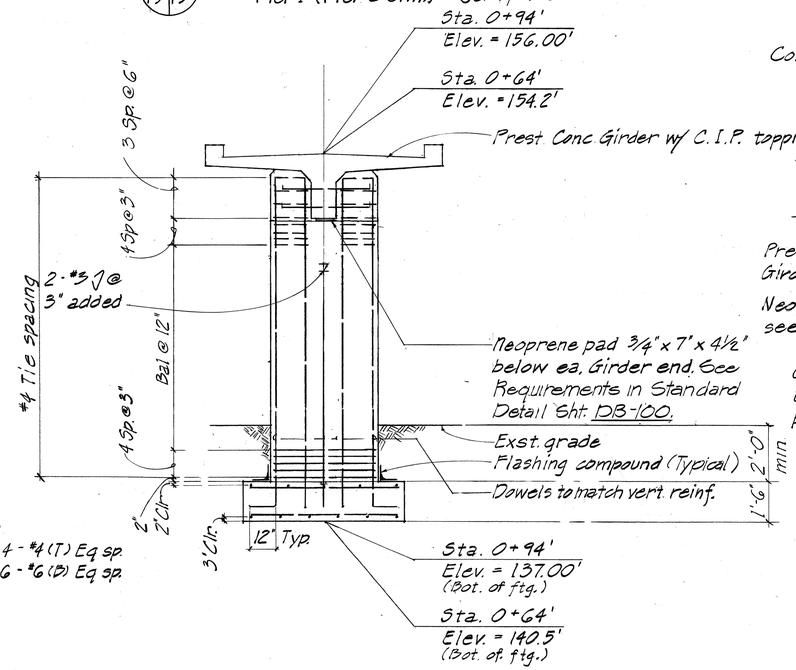

1 19|19 PLAN ~ PIER & PIER FTG.

2 19|19 ELEVATION ~ PIERS 1 & 2
Sc: 3/8" = 1'-0"

D 19|19 SECTION ~ PIER No. 2
Sc: 3/4" = 1'-0"

Note: Reinforcing steel to be grade 60 except ties which will be grade 40.

ORIGINAL PLAN		DATE
	SURVEY PLOTTED BY	
	DRAWN BY	
	TRACED BY	
NOTE BOOK	DESIGNED BY	
	QUANTITIES BY	
No.	CHECKED BY	

THOMAS C. H. LUM
REGISTERED PROFESSIONAL ENGINEER
No. 1215-S
HAWAII, U.S.A.

THIS DRAWING WAS PREPARED BY ME OR UNDER MY SUPERVISION.

Signature

STATE OF HAWAII
DEPARTMENT OF TRANSPORTATION
LAND TRANSPORTATION FACILITIES DIVISION

ELEVATION & SECTIONS of PIERS - PEDESTRIAN RAMP

LIKELIKE HIGHWAY IMPROVEMENTS
KAM IV ROAD TO VICINITY OF KALIHI STREET
F.A. PROJ. NO. F-063-1(17)

SHEET No. 19 OF 22 SHEETS

FED. ROAD DIST. NO.	STATE	FED. AID PROJ. NO.	FISCAL YEAR	SHEET NO.	TOTAL SHEETS
HAWAII	HAW.	F-063-1(17)	1984	105	156

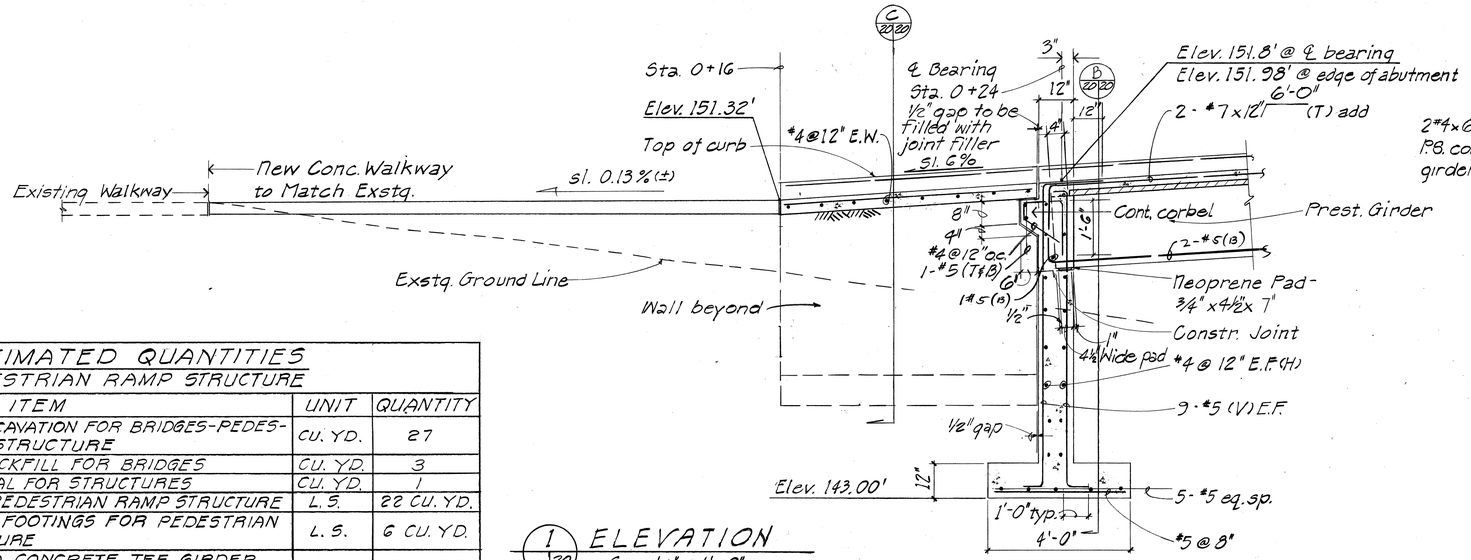

1/20 ELEVATION
Sc: 1/2" = 1'-0"

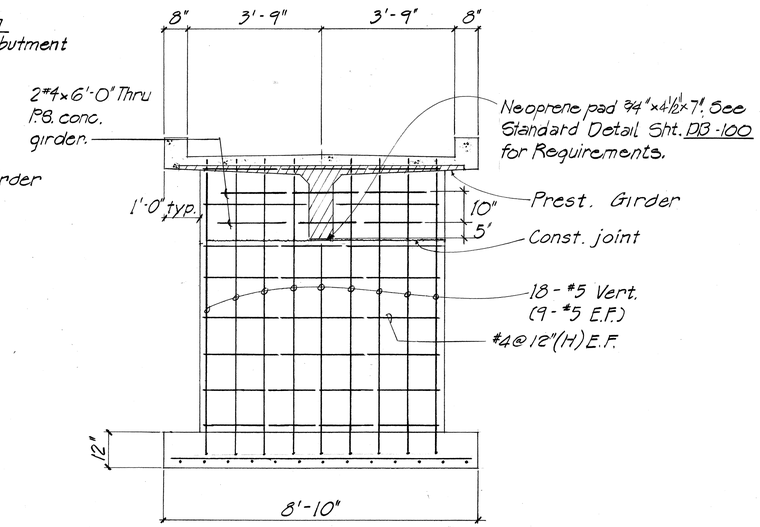

B 20/20 SECTION
Sc: 1/2" = 1'-0"

ESTIMATED QUANTITIES
PEDESTRIAN RAMP STRUCTURE

ITEM NO.	ITEM	UNIT	QUANTITY
206.6006	STRUCTURE EXCAVATION FOR BRIDGES-PEDESTRIAN RAMP STRUCTURE	CU. YD.	27
206.7211	STRUCTURE BACKFILL FOR BRIDGES	CU. YD.	3
206.8200	FILTER MATERIAL FOR STRUCTURES	CU. YD.	1
503.1074	CONCRETE IN PEDESTRIAN RAMP STRUCTURE	L.S.	22 CU. YD.
503.1075	CONCRETE IN FOOTINGS FOR PEDESTRIAN RAMP STRUCTURE	L.S.	6 CU. YD.
504.7302	PRESTRESSED CONCRETE TEE GIRDER (24-INCH DEEP)	L.S.	70 LIN. FT.
507.3502	METAL RAILING FOR PEDESTRIAN RAMP STRUCTURE	LIN. FT.	168
602.0072	REINFORCING STEEL IN PEDESTRIAN RAMP STRUCTURE	L.S.	4,800 LBS.

ESTIMATED QUANTITIES
PEDESTRIAN STRUCTURE

ITEM NO.	ITEM	UNIT	QUANTITY
206.6004	STRUCTURE EXCAVATION FOR BRIDGES-KALIHI STREAM PEDESTRIAN STRUCTURE	CU. YD.	165
206.7211	STRUCTURE BACKFILL FOR BRIDGES	CU. YD.	18
206.8200	FILTER MATERIAL FOR STRUCTURES	CU. YD.	4
503.1072	CONCRETE IN KALIHI STREAM PEDESTRIAN STRUCTURE	L.S.	99 CU. YD.
503.1073	CONCRETE IN FOOTINGS FOR KALIHI STREAM PEDESTRIAN STRUCTURE	L.S.	50 CU. YD.
504.7301	PRESTRESSED CONCRETE TEE GIRDER (42-INCH DEEP)	L.S.	264 LIN. FT.
507.3501	METAL RAILING FOR KALIHI STREAM PEDESTRIAN STRUCTURE	LIN. FT.	546
602.0071	REINFORCING STEEL IN KALIHI STREAM PEDESTRIAN STRUCTURE	L.S.	24,800 LBS.

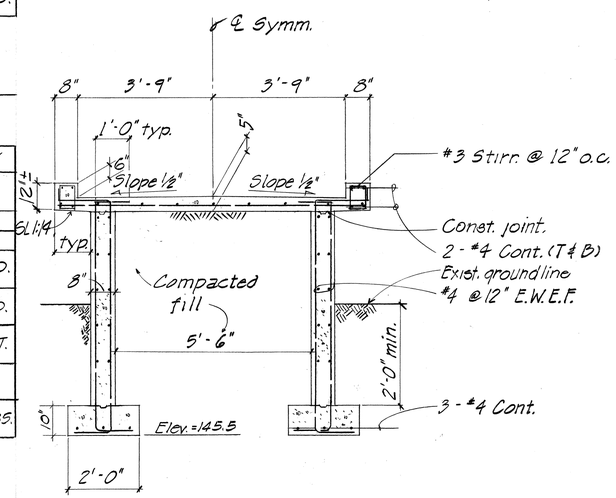

C 20/20 SECTION
Sc: 1/2" = 1'-0"

ESTIMATED QUANTITIES

ITEM NO.	ITEM	UNIT	RETAINING WALL #1 QUANTITY	RETAINING WALL #2 QUANTITY	RETAINING WALL #3 QUANTITY
206.5000	STRUCTURE EXCAVATION FOR RETAINING WALLS	CU. YD.	98	48	8
206.7250	STRUCTURE BACKFILL FOR RETAINING WALLS	CU. YD.	24	7	5
206.8300	FILTER MATERIAL FOR RETAINING WALLS	CU. YD.	4	1	1
503.1053	CONCRETE IN RETAINING WALLS	L.S.	39 CU. YD.	22 CU. YD.	4 CU. YD.
602.0053	REINFORCING STEEL IN RETAINING WALLS	L.S.	6,240 LBS.	3,680 LBS.	480 LBS

THOMAS C. H. LUM
REGISTERED PROFESSIONAL ENGINEER
No. 12135-S
HAWAII, U.S.A.

THIS WORK WAS PREPARED BY ME OR UNDER MY SUPERVISION.

Signature

STATE OF HAWAII
DEPARTMENT OF TRANSPORTATION
LAND TRANSPORTATION FACILITIES DIVISION

ELEVATION & SECTIONS OF APPROACH TO PEDESTRIAN RAMP

LIKELIKE HIGHWAY IMPROVEMENTS
KAM IV ROAD TO VICINITY OF KALIHI STREET
F.A. PROJ. NO F-063-1(17)

SHEET No. 20 OF 22 SHEETS

ORIGINAL PLAN
SURVEY PLOTTED BY
DRAWN BY
TRACED BY
DESIGNED BY
QUANTITIES BY
CHECKED BY
DATE
NOTE BOOK No.

FED. ROAD DIST. NO.	STATE	FED. AID PROJ. NO.	FISCAL YEAR	SHEET NO.	TOTAL SHEETS
HAWAII	HAW.	F-063-1(17)	1984	106	156

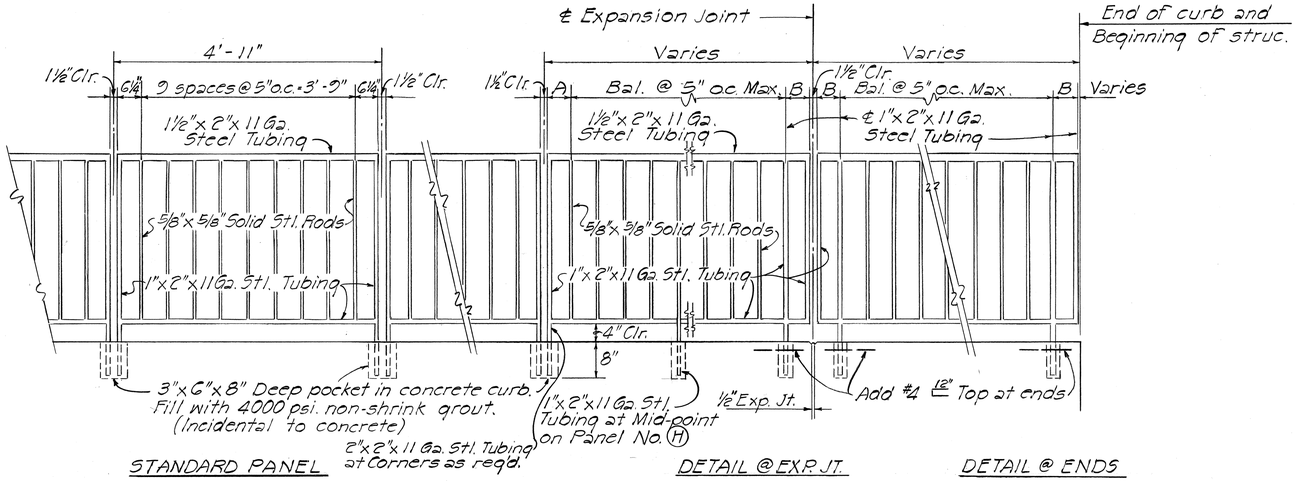

STEEL RAILING ELEVATION
Scale: ¾" = 1'-0"

SPECIAL PANELS AT ENDS AND EXPANSION JOINTS

Panel No.	Dimension A	Interior Spacing	Length of Interior Spacing	Dimension B	Total Panel Length	No. of Panels
(A)	6¼"	12 @ 4¾"	57"	6¼"	5'-9½"	4
(B)	6"	8 @ 5"	40"	6"	4'-4"	3
(C)	5¾"	11 @ 4¾"	52¼"	5¾"	5'-3¾"	1
(D)	6¼"	11 @ 5"	55"	6¼"	5'-7½"	1
(E)	6¼"	12 @ 4⅞"	58½"	6¼"	5'-11"	2
(F)	6¼"	11 @ 4⅞"	53⅜"	7⅜"	5'-7¼" x 8" *	2
(G)	6"	7 @ 5"	35"	6"	3'-11"	1
(H)	5¾"	12 @ 4⅞"	58½"	5¾"	5'-10**	1
(I)	5½"	7 @ 4¾"	33¼"	5⅜"	3'-8⅛"	4
(J)	5¾"	7 @ 4¾"	33¼"	5½"	3'-8½"	4

* ⊏ 2"x 2" post at corner
** Mid-point vertical to be 1"x 2" post

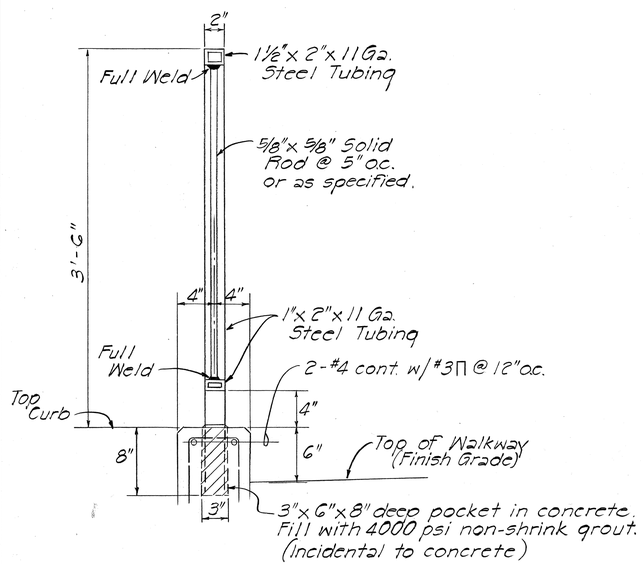

TYPICAL STEEL RAILING SECTION
Scale: 1½" = 1'-0"

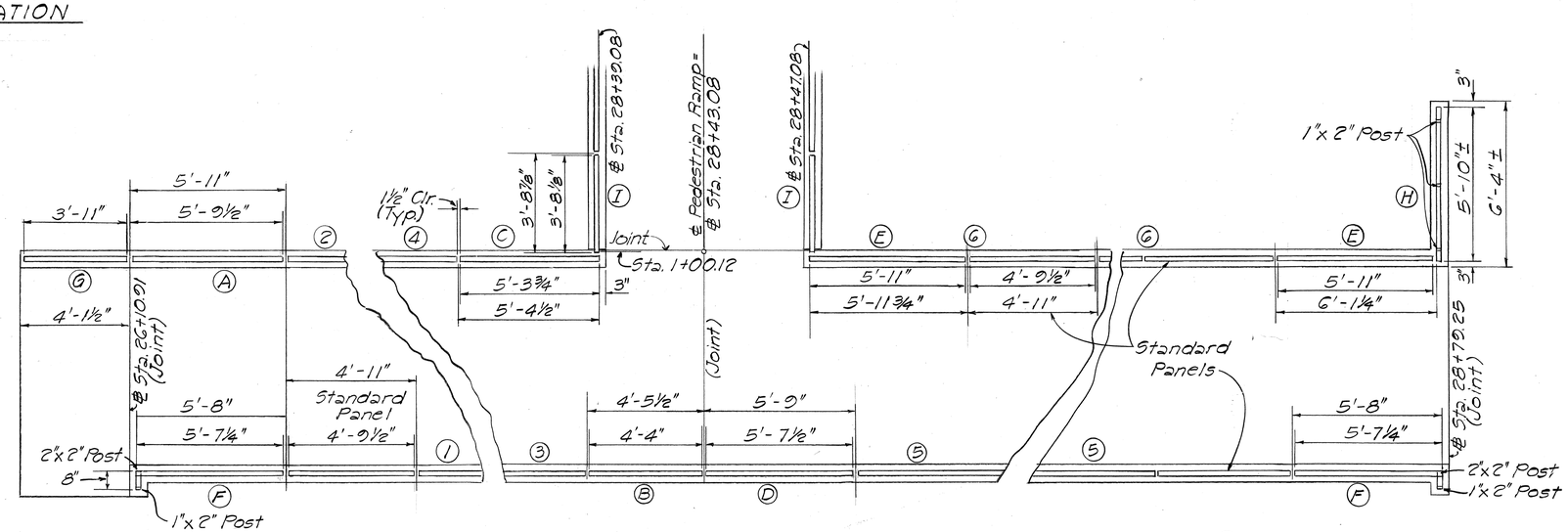

DETAIL OF SPECIAL PANEL LAYOUT
Scale: ⅜" = 1'-0"

(1) Railing No.
(A) Special Panel Designation
For locations of all railings and special panels, see Sheet No. 13.

ORIGINAL PLAN	SURVEY PLOTTED BY	DATE
	DRAWN BY	
NOTE BOOK	TRACED BY	
	DESIGNED BY	
	QUANTITIES BY	
No.	CHECKED BY	

THOMAS C. H. LUM
REGISTERED PROFESSIONAL ENGINEER
No. 1215-S
HAWAII, U.S.A.

THIS WORK WAS PREPARED BY ME OR UNDER MY SUPERVISION.

Signature

STATE OF HAWAII
DEPARTMENT OF TRANSPORTATION
HIGHWAYS DIVISION

DETAILS OF METAL RAILING FOR PEDESTRIAN STRUCTURES
LIKELIKE HIGHWAY IMPROVEMENTS
KAM IV ROAD TO VICINITY OF KALIHI STREET
F.A. PROJ. NO. F-063-1(17)

SHEET No. 21 OF 22 SHEETS