FED. ROAD DIST. NO.	STATE	PROJ. NO.	FISCAL YEAR	SHEET NO.	TOTAL SHEETS
HAWAII	HAW.	63A-10-71	1971	3	4

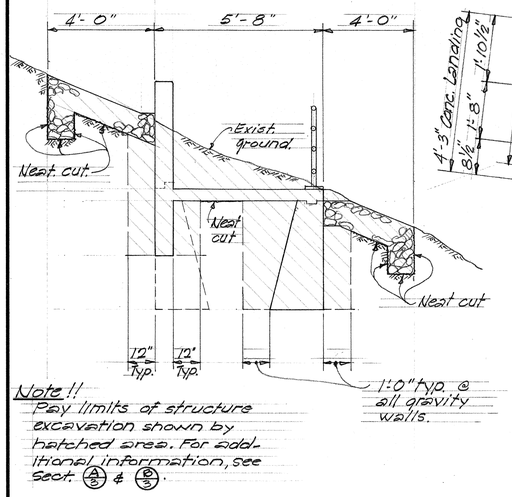

Note !! Pay limits of structure excavation shown by hatched area. For additional information, see Sect. A/3 & B/3.

STRUCT. EXCAVATION PAY LIMITS

SCALE: NOT TO SCALE

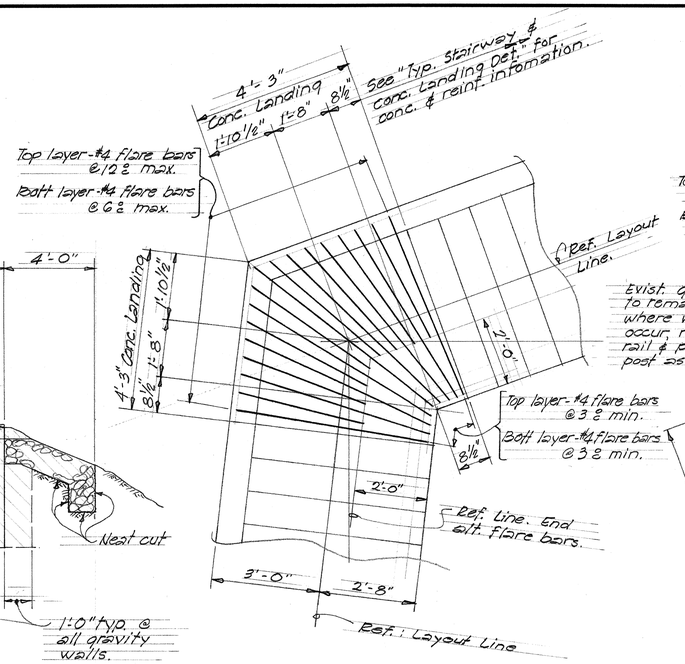

PART PLAN "B"

SCALE: 1/2" = 1'-0"

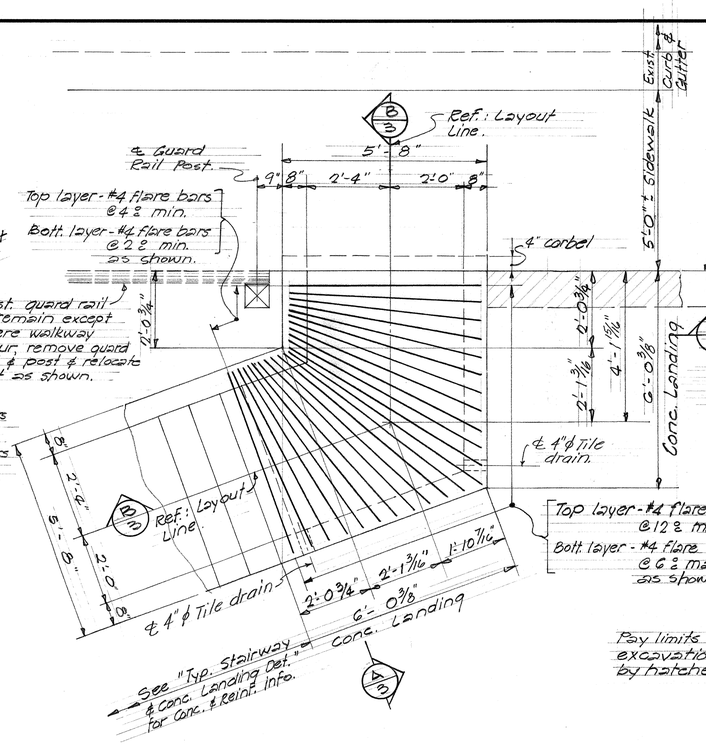

PART PLAN "A"

SCALE: 1/2" = 1'-0"

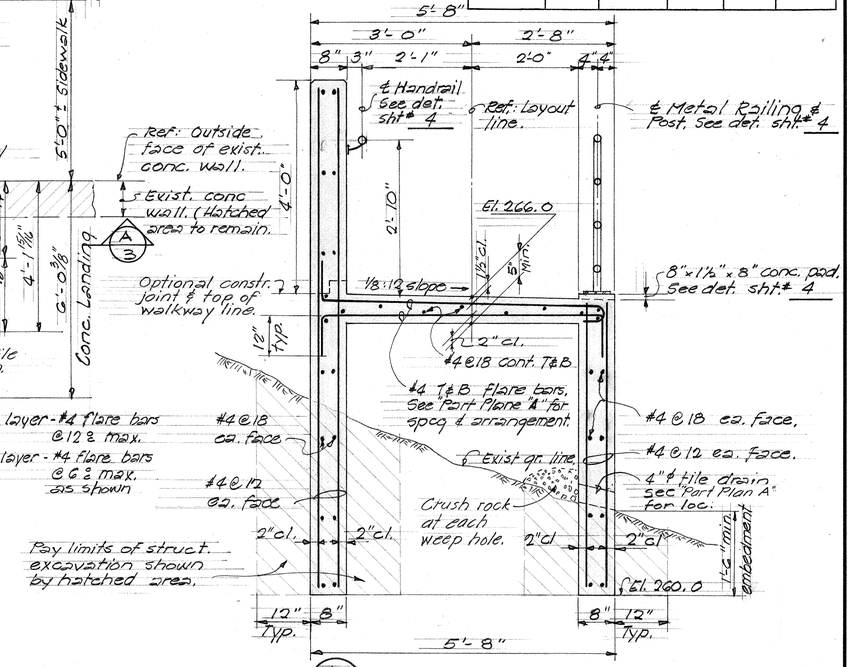

A/3 SECTION

SCALE: 3/4" = 1'-0"

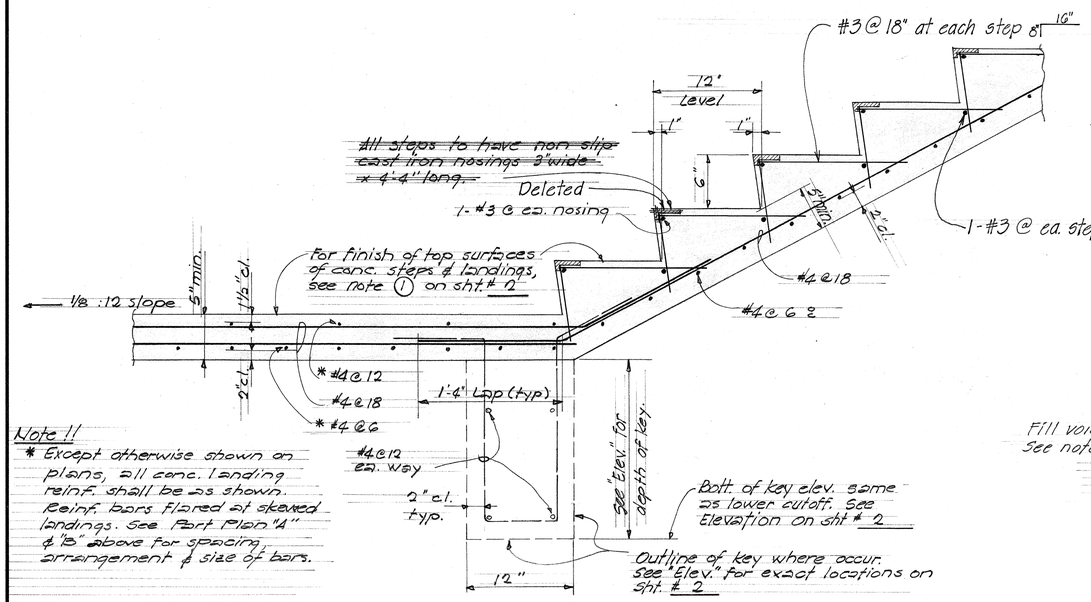

Note !!
* Except otherwise shown on plans, all conc. landing reinf. shall be as shown. Reinf. bars flared at skewed landings. See Part Plan "A" & "B" above for spacing, arrangement & size of bars.

TYPICAL STAIRWAY & CONCRETE LANDING DETAIL

SCALE: 1½" = 1'-0"

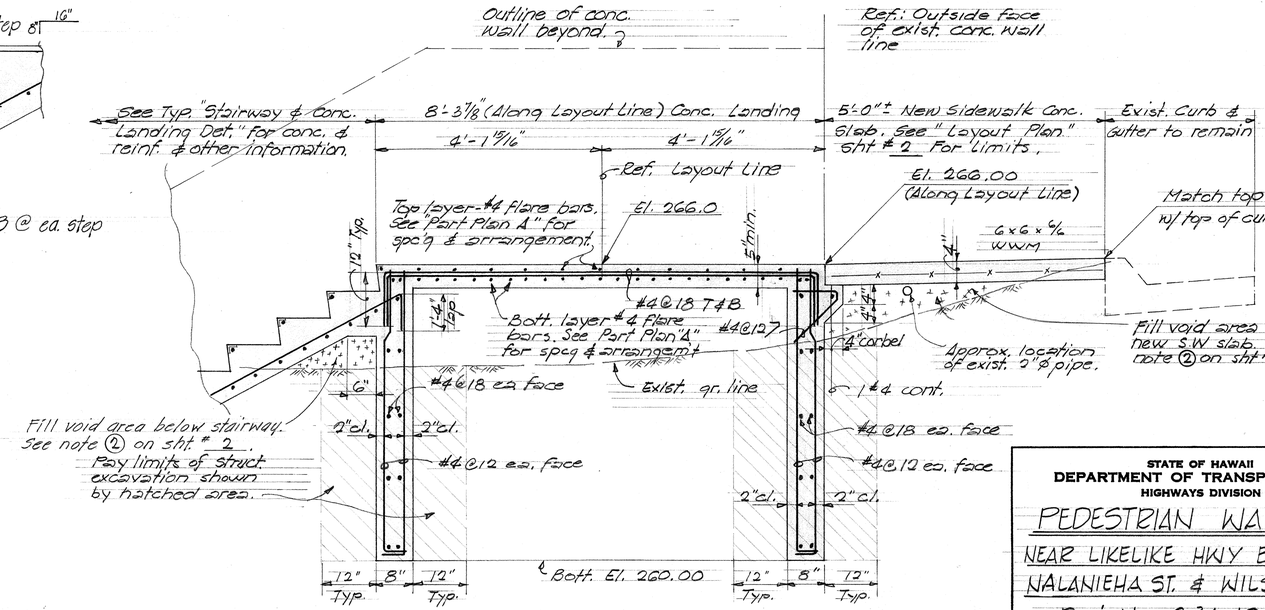

B/3 SECTION

SCALE: 3/4" = 1'-0"

STATE OF HAWAII
DEPARTMENT OF TRANSPORTATION
HIGHWAYS DIVISION

PEDESTRIAN WALKWAY
NEAR LIKELIKE HWY BETWEEN
NALANIEHA ST. & WILSON ST.
Proj. No. 63A-10-71

DATE: OCT. 1970

SHEET No. 3 OF 4 SHEETS

ORIGINAL PLAN	SURVEY PLOTTED BY	DATE
	SURVEY BY	
	TRACED BY	
NOTE BOOK	DESIGNED BY	
	QUANTITIES BY	
No.	CHECKED BY	

K+E CRYSTALENE® LA 2920 TRACING PAPER