FED. ROAD DIST. NO.	STATE	PROJ. NO.	FISCAL YEAR	SHEET NO.	TOTAL SHEETS
OAHU	HAWAII	61D-02-06	2006	ADD.21	57

Note:

1. Max Cut Slope Shall be 1H:1V. Actual Slope Construction and/or Structural Supported Slope Design, If Required, Shall be Determined In the Field by the Geotechnical Engineer.
2. Where Rock Surface is Encountered, Erosion Control Mat Shall be Secured using Proper Anchor Bolts.
3. Cost of Welded Wire Fabric shall be considered incidental and included in the lump sum amount bid under Proposal Item 503.0500 – Concrete for Rockfall Catchment Ditch.

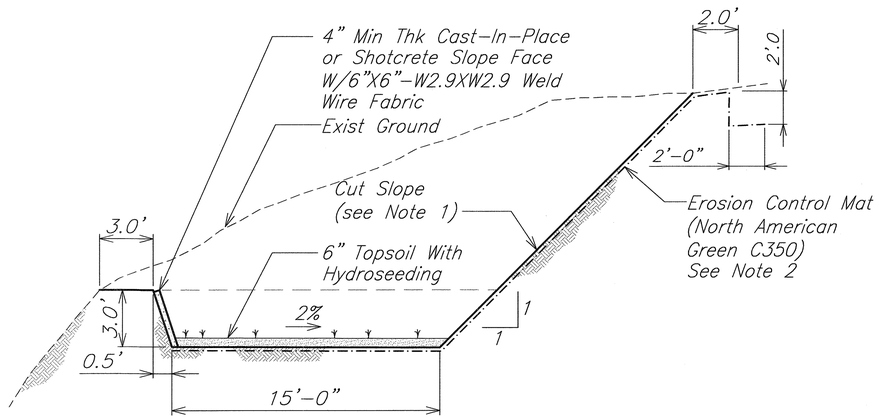

1/21 TYPICAL CATCHMENT DITCH

SCALE : 1/4" = 1'-0"

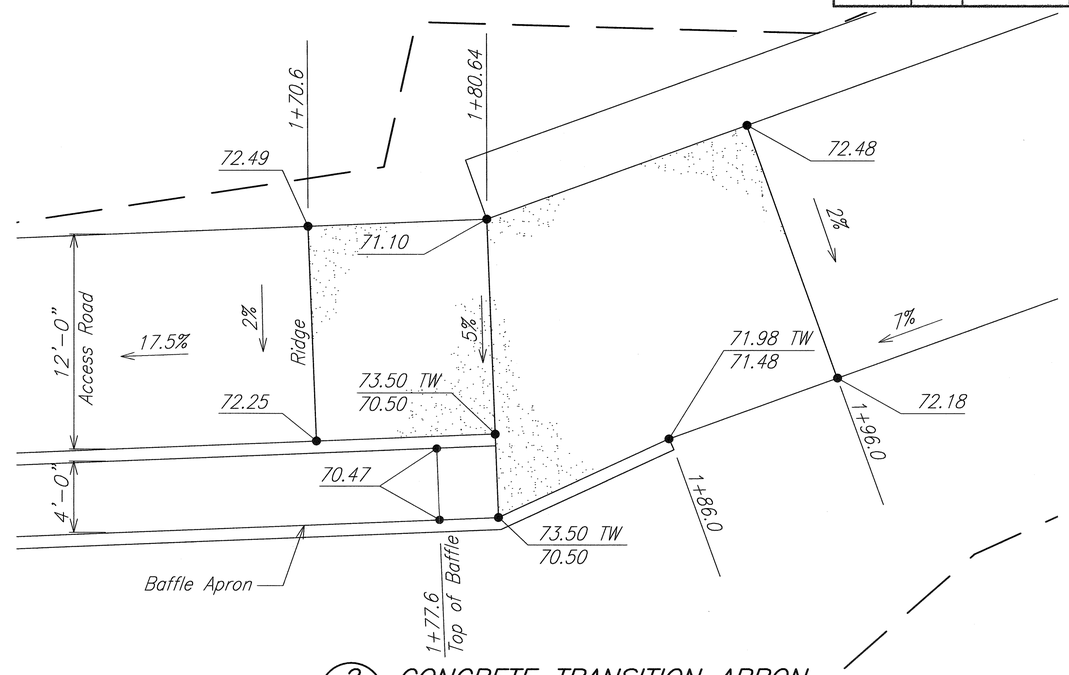

2/21 CONCRETE TRANSITION APRON

SCALE: 1"=4'

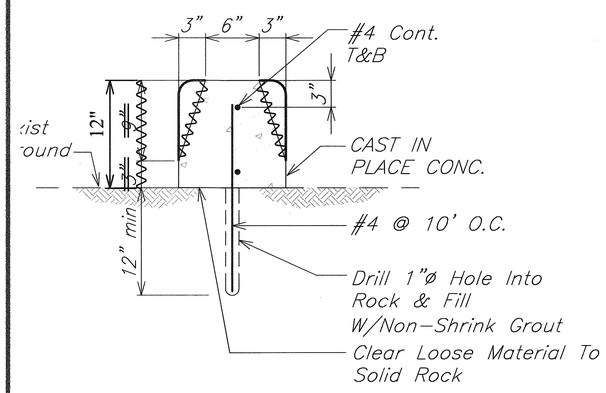

3/21 CONCRETE BERM (IN ROCK)

NOT TO SCALE

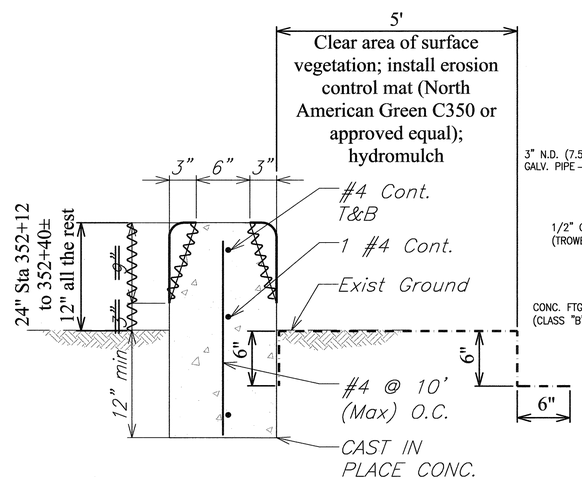

4/21 CONCRETE BERM (IN SOIL)

NOT TO SCALE

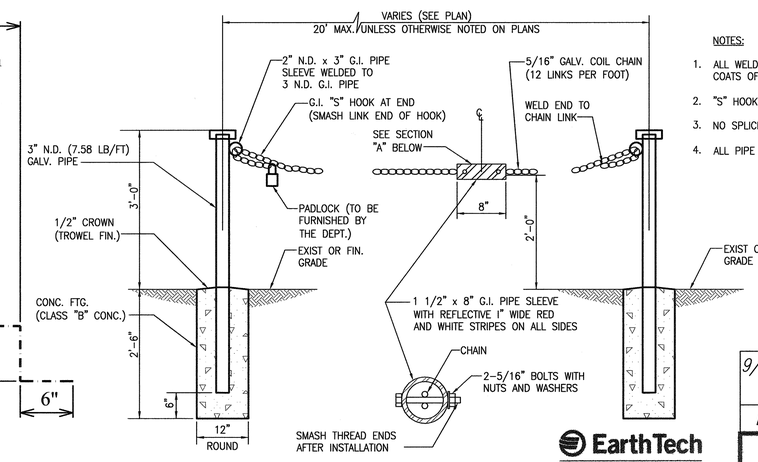

SECTION "A"

NOT TO SCALE

5/21 ACCESS CHAIN BARRIER DETAIL

NOT TO SCALE

NOTES:

1. ALL WELDED CONNECTIONS SHALL BE PAINTED WITH TWO COATS OF Z.R.C. COLD GALVANIZING COMPOUND.
2. "S" HOOK SHALL BE 5/16"ø WITH TIP TAPERED TO 3/16".
3. NO SPLICING SHALL BE ALLOWED ON G.I. PIPE POSTS.
4. ALL PIPE SIZES ARE NOMINAL DIAMETER (N.D.)

LEGEND FOR AS-BUILT POSTINGS

~~	Squiggly line for as-built deletion
~~100.00~~	Double line for as-built deletion
Roadway	Text for as-built posting

Date	Revision
9/11/06	Added Note 3 to Detail 1/21; revised elevation on Detail 2/21

EarthTech
A tyco International Ltd. Company

ARDALAN R. NIKOU
LICENSED PROFESSIONAL ENGINEER
No. 6198-C
HAWAII, U.S.A.

EXPIRATION DATE OF THE LICENSE 4/30/2008
THIS WORK WAS PREPARED BY ME OR UNDER MY SUPERVISION.

STATE OF HAWAII
DEPARTMENT OF TRANSPORTATION
HIGHWAYS DIVISION

CATCHMENT DITCH DETAILS

KAILUA ROAD PERMANENT ROCKFALL AND LANDSLIDE MITIGATION PROJECT NO. 61D-02-06

Scale: As Noted Date: Aug 2006

SHEET No. 1 OF 1 SHEETS

ORIGINAL PLAN | SURVEY PLOTTED BY | DRAWN BY | TRACED BY | DESIGNED BY | QUANTITIES BY | CHECKED BY | DATE

NOTE BOOK No.

"AS-BUILT"

ADD. 21