FED. ROAD DIST. NO.	STATE	PROJ. NO.	FISCAL YEAR	SHEET NO.	TOTAL SHEETS
HAWAII	HAW.	STP-061-1(34)	2000	34	38

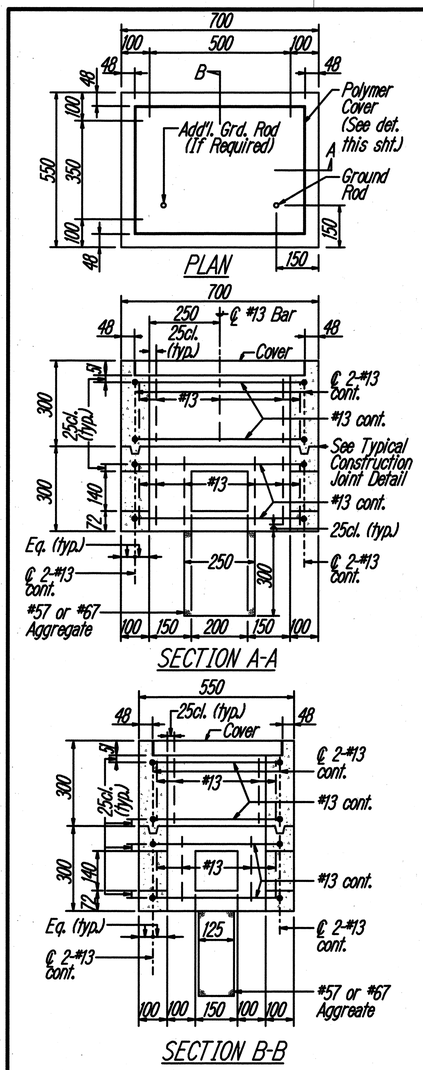

A / E-12 **TYPE "A" PULLBOX (Old Type "B")**
N.T.S.

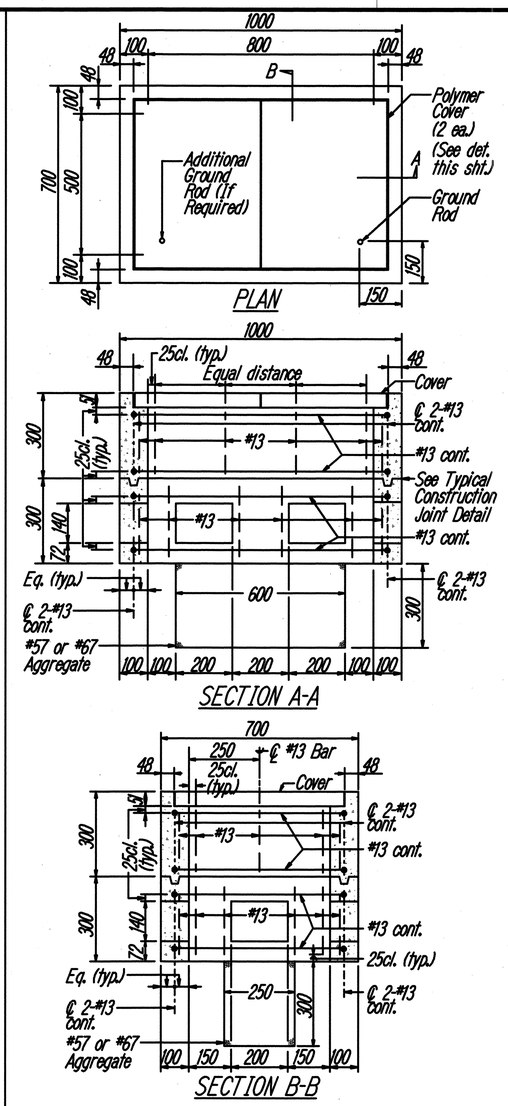

B / E-12 **TYPE "B" PULLBOX (Old Type "C")**
N.T.S.

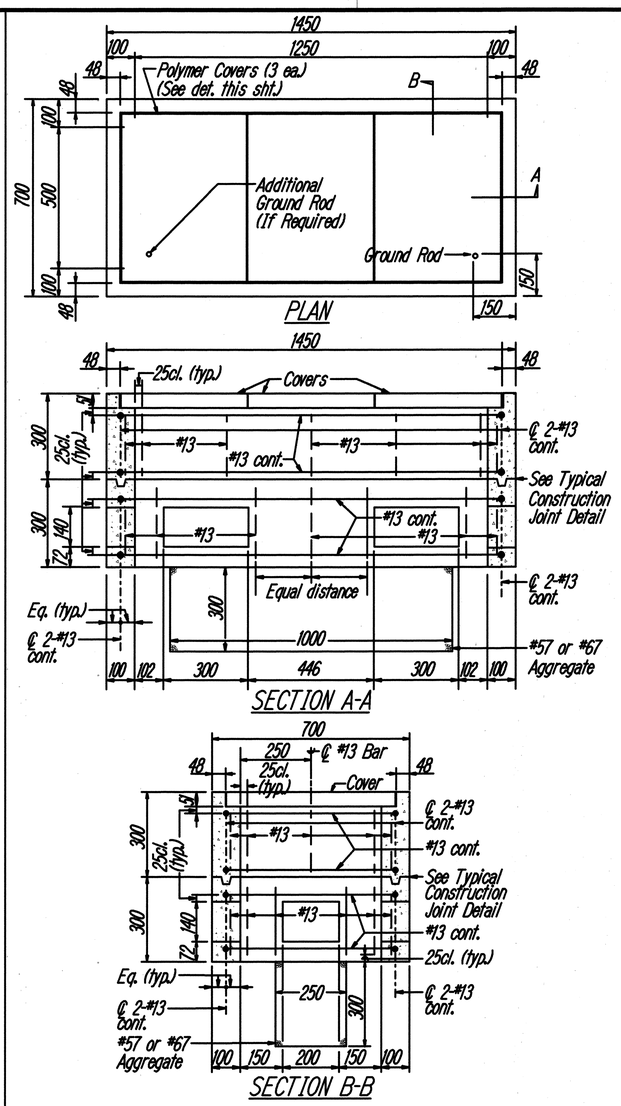

C / E-12 **TYPE "C" PULLBOX (Old Type "D")**
N.T.S.

GENERAL NOTES

1. Provide a minimum of one 16 dia. x 2.5m Copperweld Ground Rod in each pullbox. When directed by the Traffic Signal Inspector/Engineer, install additional Ground Rods. Cost of Ground Rods shall be incidental to the pullboxes.
2. All pre-cast concrete pullboxes shall be manufactured in two pieces.
3. The pullbox with cover shall be capable of supporting an MS 18 Loading.
4. The maximum weight of the pullbox cover shall not exceed 27 kilograms.
5. The openings for the conduits on all pullboxes shall be pre-cast concrete knockouts.
6. After installing the conduits in the openings of the pullboxes, the Contractor shall fill the excess opening in the pre-cast knockouts with concrete mortar.
7. Prior to installing the pullboxes, the Contractor shall level the bottom of the trench and achieve a minimum of 95% relative compaction of the bottom of the trench.
8. All concrete shall be Class A (25MPa, min.)
9. Rebars shall be Grade 300 and all lapped splices shall be 360mm minimum.
10. The #57 or #67 size aggregate shall conform to latest version of AASHTO M43 (ASTM D 448).
11. Type "C" Pullbox shall be installed in a location protected from vehicular traffic (i.e. raised sidewalk, behind A.C. curbs, traffic signal standard or pipe guards).

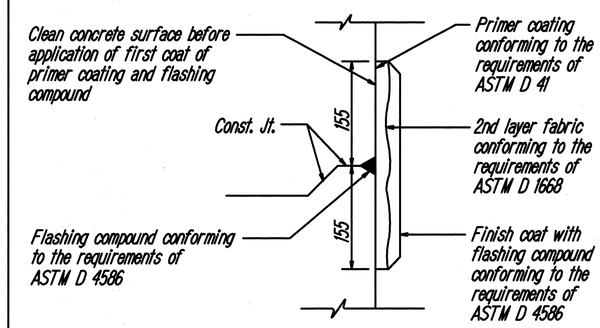

D / E-12 **TYPICAL FLASHING COMPOUND WATERPROOFING DETAILS**
N.T.S.

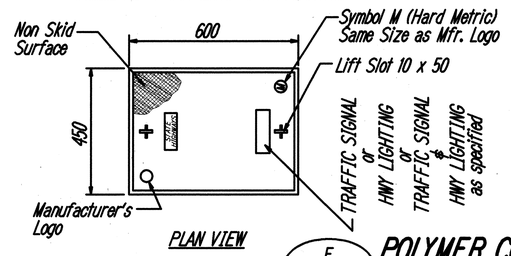

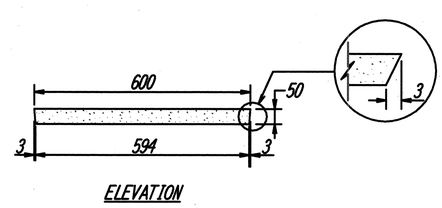

E / E-12 **POLYMER CONCRETE COVER**
N.T.S.

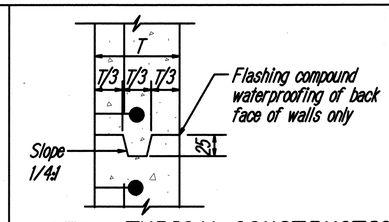

F / E-12 **TYPICAL CONSTRUCTION JOINT DETAIL**
N.T.S.

All Dimensions are in Millimeters unless otherwise shown

STATE OF HAWAII
DEPARTMENT OF TRANSPORTATION
HIGHWAYS DIVISION

PULLBOX & COVER DETAILS

PALI HIGHWAY INTERSECTION IMPROVEMENTS AT JACK LANE
PROJECT NO. STP-061-1(34)

Scale: As Shown Date:

STEVEN H. SUMIDA LICENSED PROFESSIONAL ENGINEER No. 7637-E HAWAII, U.S.A.

THIS WORK WAS PREPARED BY ME OR UNDER MY SUPERVISION

SHEET No. E-12 OF 13 SHEETS