FED. ROAD DIST. NO.	STATE	FED. AID PROJ. NO.	FISCAL YEAR	SHEET NO.	TOTAL SHEETS
HAWAII	HAW.	61D-01-85	1988	6	29

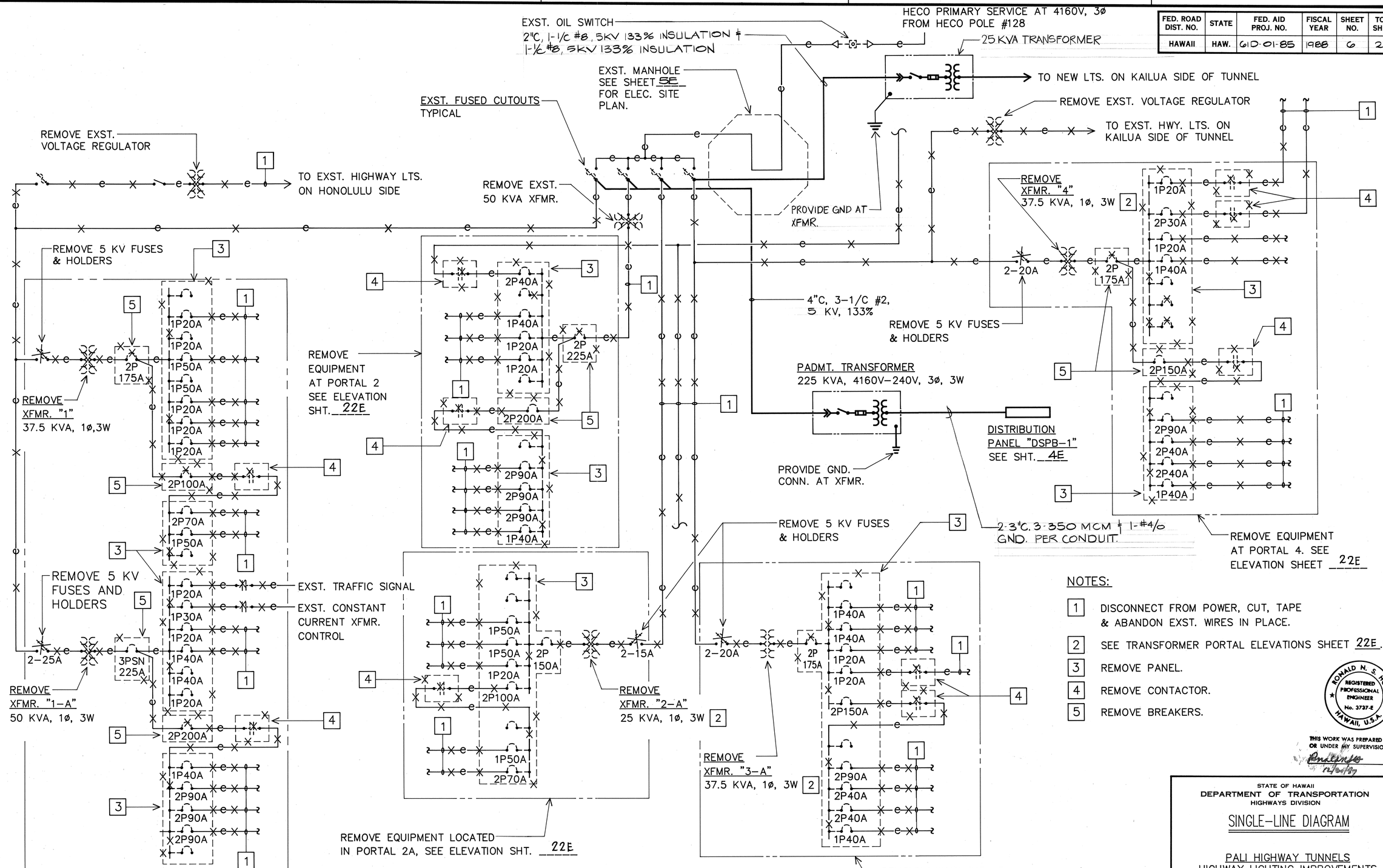

NOTES:

1. DISCONNECT FROM POWER, CUT, TAPE & ABANDON EXST. WIRES IN PLACE.
2. SEE TRANSFORMER PORTAL ELEVATIONS SHEET 22E.
3. REMOVE PANEL.
4. REMOVE CONTACTOR.
5. REMOVE BREAKERS.

REVISED SINGLE-LINE DIAGRAM
NOT TO SCALE

RONALD N. S. HO
REGISTERED PROFESSIONAL ENGINEER
No. 3737-E
HAWAII, U.S.A.

THIS WORK WAS PREPARED BY ME OR UNDER MY SUPERVISION.

STATE OF HAWAII
DEPARTMENT OF TRANSPORTATION
HIGHWAYS DIVISION

SINGLE-LINE DIAGRAM

PALI HIGHWAY TUNNELS
HIGHWAY LIGHTING IMPROVEMENTS
PROJECT NO. 61D-01-85

SCALE: NOT TO SCALE DATE: JUL., 1987

SHEET No. 3E OF 29 SHEETS

ORIGINAL PLANS | SURVEY PLOTTED BY | DRAWN BY | TRACED BY | DESIGNED BY | QUANTITIES BY | CHECKED BY | NOTE BOOK | No. | DATE