FED. ROAD DIST. NO.	STATE	~~FED. AID~~ PROJ. NO.	FISCAL YEAR	SHEET NO.	TOTAL SHEETS
HAWAII	HAW.	61B-02-72	1974	12	13

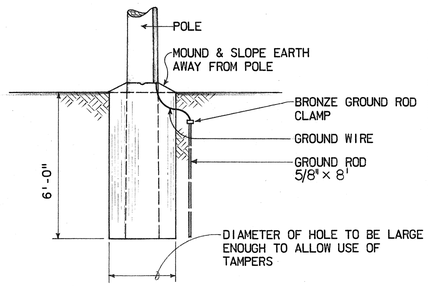

POLE SETTING DETAIL

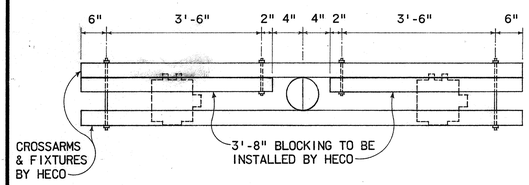

TOP VIEW

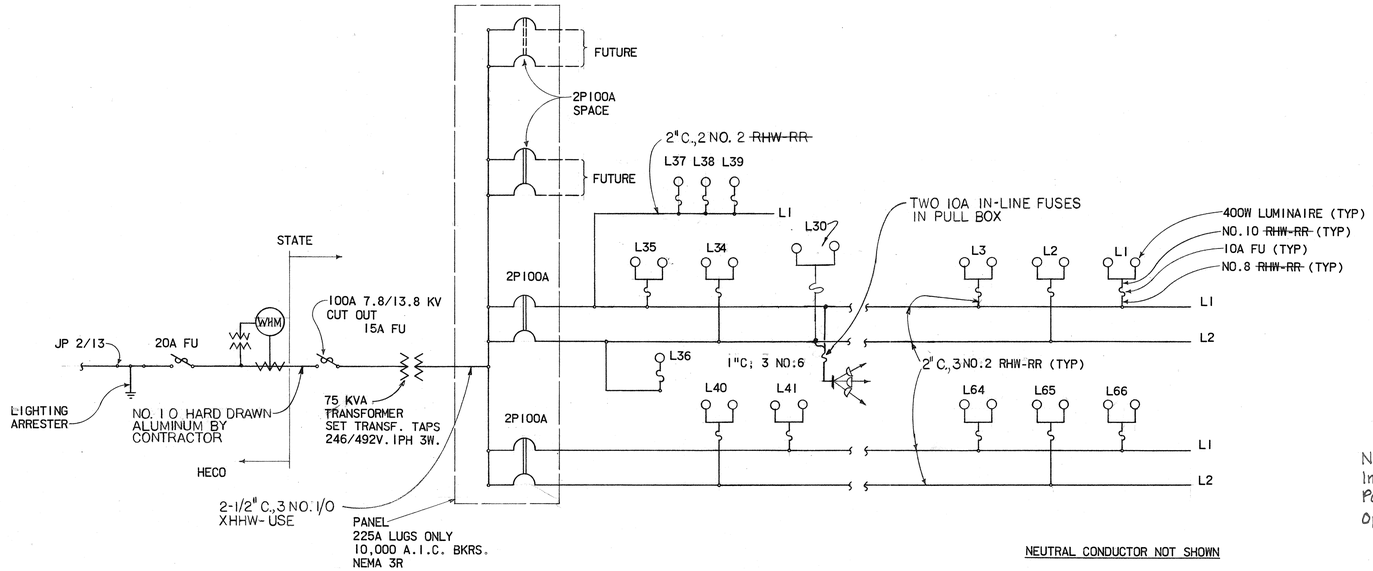

SINGLE LINE DIAGRAM
(TUNNEL SIDE TO KAILUA DRIVE IN THEATRE)

NOTE: Where Type RHW-RR Cables are Indicated. Substitute Cross-Linked Polyethylene, Type USE 600 V. Cables. Option Allowed By Addendum #1.

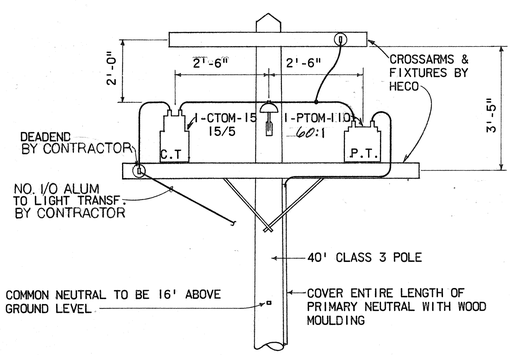

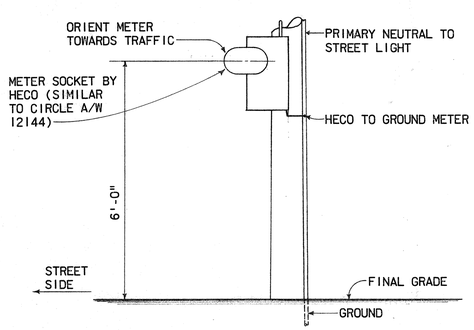

ELEVATION

PRIMARY METER POLE DETAIL

SCALE: 1/2" = 1'-0"

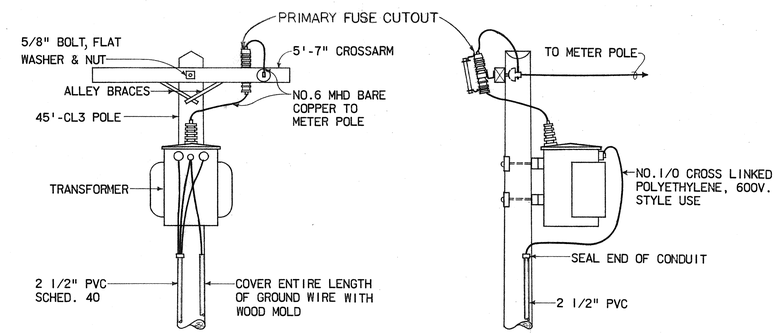

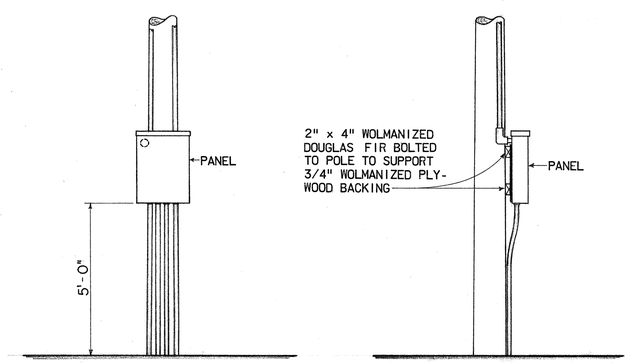

FRONT VIEW

SIDE VIEW

TRANSFORMER POLE DETAIL

N.T.S.

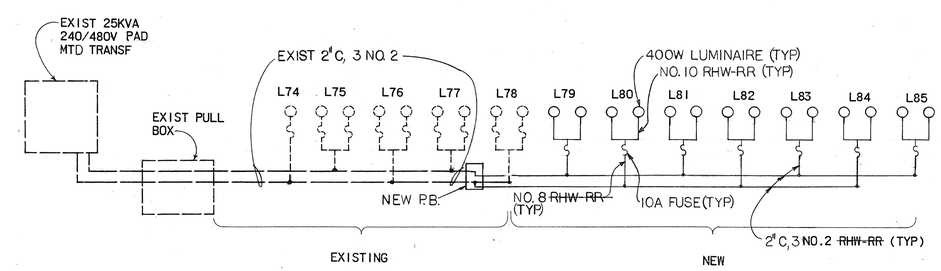

NEUTRAL CONDUCTOR NOT SHOWN

SINGLE LINE DIAGRAM
(MAUNAWILI BRIDGE TO WAIMANALO JCT)

ORIGINAL PLAN	SURVEY PLOTTED BY	DATE
	DRAWN BY	"
	TRACED BY	"
NOTE BOOK	DESIGNED BY	"
	QUANTITIES BY	"
No.	CHECKED BY	"

ALBERT S. C. CHONG
REGISTERED PROFESSIONAL ENGINEER
No. 1003
HAWAII, U.S.A.

THIS WORK WAS PREPARED BY ME OR UNDER MY SUPERVISION

Albert S. C. Chong, PE

STATE OF HAWAII
DEPARTMENT OF TRANSPORTATION
HIGHWAYS DIVISION

HIGHWAY LIGHTING IMPROVEMENT
ON PALI HIGHWAY
BETWEEN PALI TUNNEL AND
WAIMANALO JUNCTION
PROJECT NO. 61B-02-72

SHEET No. 12 OF 13 SHEETS

12

K+E CRYSTALENE TRACING PAPER