FED ROAD DIST. NO.	STATE	FED AID PROJ. NO.	FISCAL YEAR	SHEET NO.	TOTAL SHEETS
HAWAII	HAW	BU-061-1(6) UNIT 4	1958	36	148

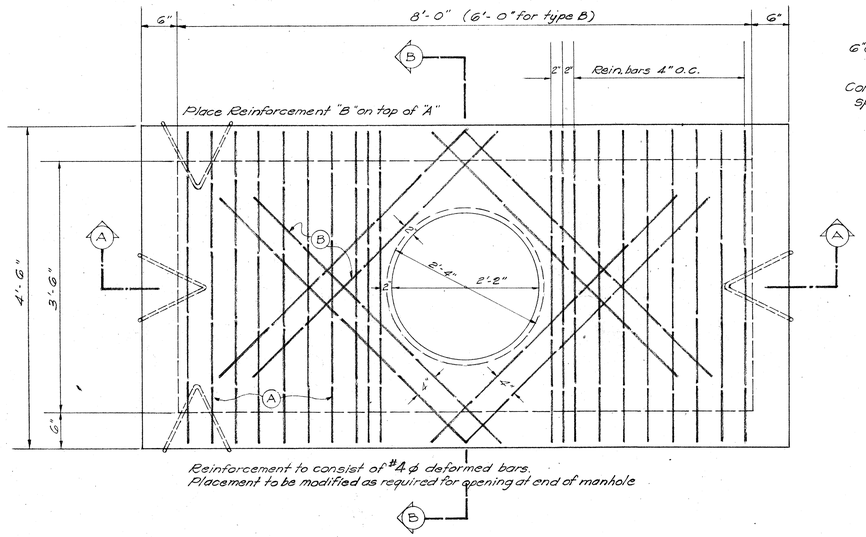

Reinforcement to consist of #4 ϕ deformed bars.
Placement to be modified as required for opening at end of manhole

TOP VIEW AND ROOF REINFORCING DETAIL

SCALE: 1" = 1'-0"

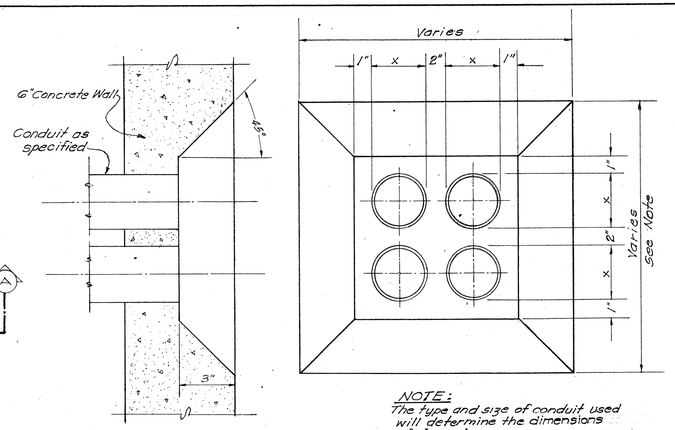

NOTE:
The type and size of conduit used will determine the dimensions of Invert.

INVERT DETAIL

SCALE: NONE

MANHOLE TYPE

(Subsidiary ducts not shown)

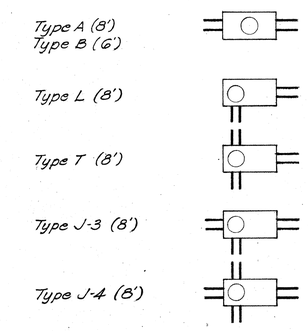

NOTES:

1. Concrete to be Class "A-1"
2. No reinforcement required in walls or floor.
3. Side walls to be poured direct between the manhole forms and the side of the excavation where soil condition permits.
4. Pulling-in iron to be installed opposite each main duct formation. (Not required opposite subsidiary ducts.)
5. All duct formations to be spaced equidistant between the floor and ceiling except where otherwise specified.
6. Standard end bells may be substituted for recesses at conduit entrances to manholes provided that manhole dimensions shall be increased three (3) inches for each wall in which end bells instead of recesses are provided.

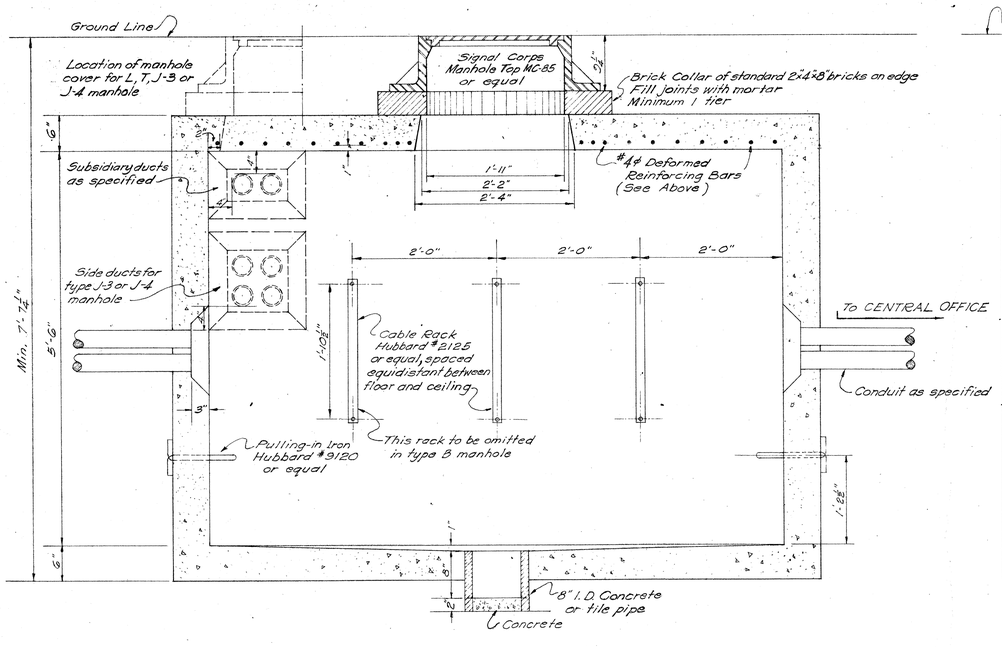

SECTION "A-A"

SCALE: 1" = 1'-0" *

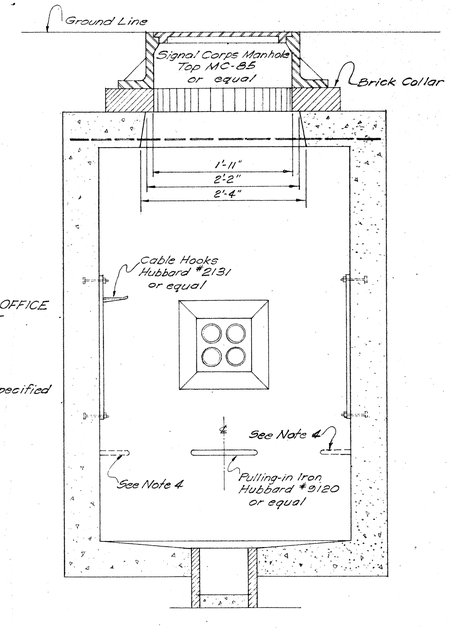

SECTION "B-B"

SCALE: 1" = 1'-0"

* Scale applies to 8' manholes

LAW & WILSON • TUDOR • TOWILL
ARCHITECTS • ENGINEERS • SURVEYORS
REGISTERED ENGINEER No. 584
DATE July 3, 1957

TERRITORIAL HIGHWAY DEPARTMENT
TERRITORY OF HAWAII
NUUANU HIGHWAY
PROJECT NO. BU-061-1(6), UNIT 4

ARMY SIGNAL CORPS MANHOLE

SCALE: AS NOTED SEPT. 1957

SHEET NO. 1 OF 1 SHEET

.S146 (2).36 69