FED. ROAD DIST. NO.	STATE	FED. AID PROJ. NO.	FISCAL YEAR	SHEET NO.	TOTAL SHEETS
HAWAII	HAW	DE-0200(802)	1999	61	92

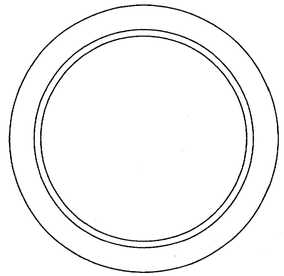

PLAN OF FRAME

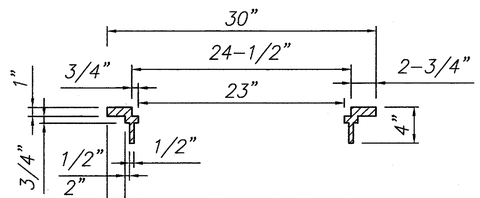

SECTION OF FRAME

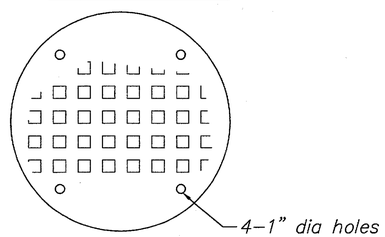

TOP VIEW OF COVER

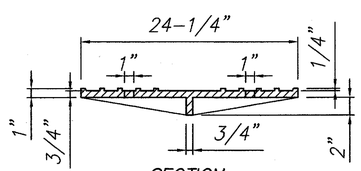

SECTION

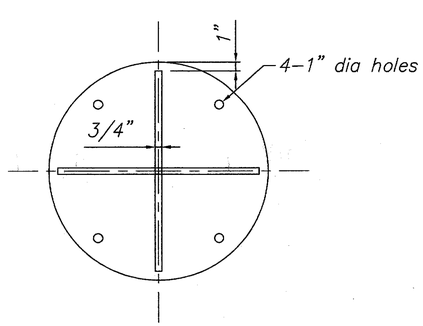

BOTTOM VIEW OF COVER

A S-28, S-10 S-35 DETAILS OF CAST IRON MANHOLE FRAME AND COVER Scale: 1-1/2"=1'-0"

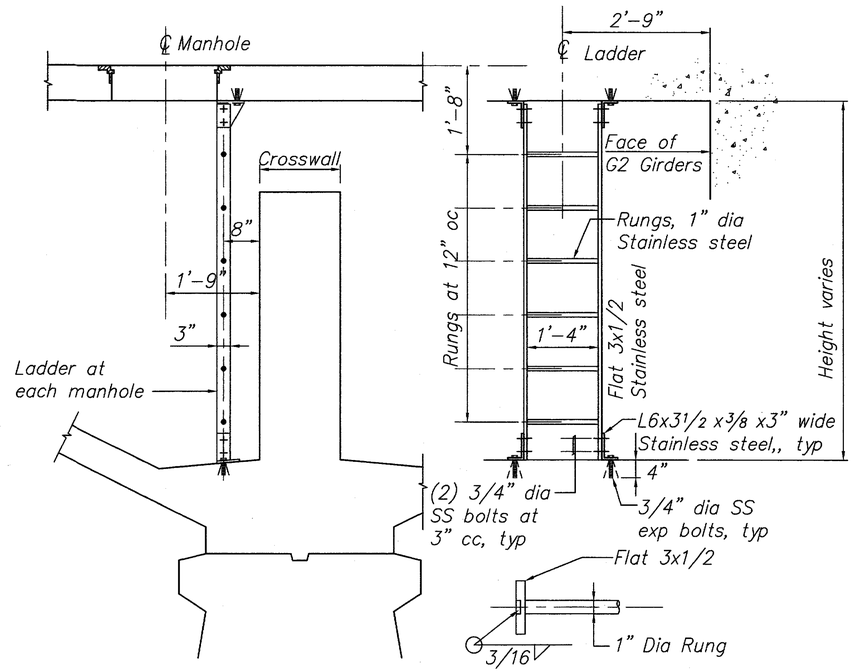

B S-10, S-35 S-35 LADDER DETAIL (TYPICAL) Scale: 3/4"=1'-0"

GRAPHIC SCALES:

0 6" 1' 2' 4'
3/4"=1'-0"

0 6" 1' 2'
1 1/2"=1'-0"

NORMAN K. NAGAMINE LICENSED PROFESSIONAL ENGINEER NO. 5479-S HAWAII, U.S.A.

Norman K. Nagamine

THIS WORK WAS PREPARED BY ME OR UNDER MY SUPERVISION

STATE OF HAWAII
DEPARTMENT OF TRANSPORTATION
HIGHWAYS DIVISION

MANHOLE DETAILS

KALAKAUA AVENUE BRIDGE IMPROVEMENTS
Federal Aid Project No. DE-0200(802)

SCALE: AS SHOWN DATE: JULY 8, 1999

SHEET No. S-35 OF 39 SHEETS

F:\97JOB.DWG\9756KALA\DRWGS\STRUCTURAL_DWGS\KALAS35.DWG 07/02/99 09:44

F:\Structural_Dwgs\Kalas35.dwg Wed Jul 07 17:32:54 1999