FED. ROAD DIST. NO.	STATE	PROJ. NO.	FISCAL YEAR	SHEET NO.	TOTAL SHEETS
HAWAII	HAW.	HWY-0-02-08R	2016	C.O.40	69

Door Schedule

Door Number (D/101)	Location	New/ Existing	Type	Material: Door Panel	Material: Door Frame	Finish	Vision Panel	Door Width	Door Height	Thk.	Fire Rating	Detail	Hardware Group	See Door Notes (C1 / A7.1 A7.3) Remarks
101	Building A Reception	New	D	Alum./Glass	Aluminum	Clr. Anod	9/16" Tinted Laminated	3'-0"	7'-0"	See Specs	--	A3,A4/A7.2	001	Alum. Threshold
102	Building A Open Office	New	A	Galv. Steel	Galv. Steel	Paint		3'-0" Verify	6'-8" Verify	1-3/4"	--	A2/A7.2	002	Alum. Threshold
103	Building A Classroom	New	A	Galv. Steel	Galv. Steel	Paint		3'-0"	6'-8"	1-3/4"	--	A2/A7.2	002	Alum. Threshold
104	Building A Classroom	New	A	Wood	Galv. Steel	Paint		3'-0"	7'-0"	1-3/4"	--	A1/A7.2	003	
105	Building A Reception	New	A	Wood	Galv. Steel	Paint		3'-0"	7'-0"	1-3/4"	--	A1/A7.2	004	
106	Building A Accessible Toilet	New	A	Wood	Galv. Steel	Paint		3'-0"	7'-0"	1-3/4"	--	A1/A7.2	005	Marble Threshold
107	Building A Office #3	New	A	Wood	Galv. Steel	Paint		3'-0"	7'-0"	1-3/4"	--	A1/A7.2	006	
108	Building A Office #2	New	A	Wood	Galv. Steel	Paint		3'-0"	7'-0"	1-3/4"	--	A1/A7.2	006	
109	Building A Office #1	New	A	Wood	Galv. Steel	Paint		3'-0"	7'-0"	1-3/4"	--	A1/A7.2	006	
110	Building A Toilet	New	A	Galv. Steel	Galv. Steel	Paint		3'-0"	6'-8" Verify	1-3/4"	--	A2/A7.2	014	Alum. Threshold
201	Building B Open Office	New	A	Galv. Steel	Galv. Steel	Paint		3'-0" Verify	6'-8" Verify	1-3/4"	--	A2/A7.2	013	Alum. Threshold
202	Building B Hallway	New	E	Alum./Glass	Aluminum	Clr. Anod	9/16" Tinted Laminated	3'-0" Verify	6'-8" Verify	See Specs	--	A4/A7.2	001	Alum. Threshold
204	Building B Men's Toilet	New	A	Wood	Galv. Steel	Paint		3'-0"	6'-8"	1-3/4"	20 Min.	A2/A7.2	010	Marble Threshold
206	Building B Storage	New	A	Wood	Galv. Steel	Paint		3'-0"	6'-8"	1-3/4"	20 Min.	A2/A7.2	011	
207	Building B Women's Toilet	New	A	Wood	Galv. Steel	Paint		3'-0"	6'-8"	1-3/4"	20 Min.	A2/A7.2	010	Marble Threshold
208	Building B Hallway	New	A	Wood	Galv. Steel	Paint		3'-0"	7'-0"	1-3/4"	--	A1/A7.2	008	
209	Building B Office #1	New	A	Wood	Galv. Steel	Paint		3'-0"	7'-0"	1-3/4"	20 Min.	A1/A7.2	012	
210	Building B Office #2	New	A	Wood	Galv. Steel	Paint		3'-0"	7'-0"	1-3/4"	20 Min.	A1/A7.2	012	
211	Building B Lounge	New	A	Wood	Galv. Steel	Paint		3'-0"	7'-0"	1-3/4"	20 Min.	A1/A7.2	007	
212	Building B Office #3	New	A	Wood	Galv. Steel	Paint		3'-0"	7'-0"	1-3/4"	--	A1/A7.2	006	
213	Building B Office #4	New	A	Wood	Galv. Steel	Paint		3'-0"	7'-0"	1-3/4"	--	A1/A7.2	006	
214	Building B Clerk's Station	New	A	Wood	Galv. Steel	Paint		3'-0"	6'-8" Verify	1-3/4"	--	A2/A7.2	006	
215	Building B Clerk's Station	New	C	Stainless Stl.	Stainless Stl.	SeeSpecs		6'-0"	4'-2"	See Specs	1 1/2 Hr.	A1/A7.3	-	
	Existing Storage Building Entrance Door	New	B	Wood	Galv. Steel	Paint		5'10" Verify	6'-6" Verify	1-3/4"	--	--	015	

Window Schedule

Window Number (W/1)	Location	New/ Existing	Type	Frame Material	Frame Finish	Glazing	Window Opening: Width (W)	Window Opening: Height (H)	Screen & Frame	See Window Notes (C1 / A7.1 A7.3) Remarks
1	Building A Reception	Existing	A	Aluminum	Clr. Anod.	Existing	5'-4" ±	6'-8" ±	---	
2	Building A Reception	Existing	A	Aluminum	Clr. Anod.	Existing	5'-4" ±	6'-8" ±	---	
3	Building A Open Office	Existing	A	Aluminum	Clr. Anod.	Existing	5'-4" ±	6'-8" ±	---	
4	Building A Open Office	Existing	A	Aluminum	Clr. Anod.	Existing	5'-4" ±	6'-8" ±	---	
7 △3	Building A Toilet	Existing	Existing	Aluminum	Clr. Anod.	Existing	5'-4" ±	2'-0" ±	Security Screen and Frame	
6	Building A Accessible Toilet	New	F	Aluminum	Clr. Anod.	Obscure	2'-8"	2'-0"	Galvanized Metal L1/4"x2"x2" Steel Frame And Expanded Metal Screen	Paint Security Screen and Frame
5 △3	Building A Toilet	New	F	Aluminum	Clr. Anod.	Obscure	2'-8"	2'-0"	Galvanized Metal L1/4"x2"x2" Steel Frame And Expanded Metal Screen	Paint Security Screen and Frame
8	Building A Open Office	Existing	B	Aluminum	Clr. Anod.	Existing	5'-4" ±	6'-8" ±	Security Screen and Frame	Repaint Security Screen and Frame
9	Building A Open Office	Existing	B	Aluminum	Clr. Anod.	Existing	5'-4" ±	6'-8" ±	Security Screen and Frame	Repaint Security Screen and Frame
10	Building A Classroom	Existing	B	Aluminum	Clr. Anod.	Existing	5'-4" ±	6'-8" ±	Security Screen and Frame	Repaint Security Screen and Frame
11	Building A Classroom	Existing	B	Aluminum	Clr. Anod.	Existing	5'-4" ±	6'-8" ±	Security Screen and Frame	Repaint Security Screen and Frame
12	Building B Clerk's Station	New	C	Aluminum	Clr. Anod.	9/16" Tinted Laminated	8'-0" ±	4'-0" ±	Insect Screen and Frame	
13	Building B Office #4	New	D	Aluminum	Clr. Anod.	9/16" Tinted Laminated	5'-4" ±	4'-0" ±	Insect Screen and Frame	
14	Building B Office #3	New	D	Aluminum	Clr. Anod.	9/16" Tinted Laminated	5'-4" ±	4'-0" ±	Insect Screen and Frame	
15	Building B Office #2	New	D	Aluminum	Clr. Anod.	9/16" Tinted Laminated	5'-4" ±	4'-0" ±	Insect Screen and Frame	
16	Building B Office #1	New	D	Aluminum	Clr. Anod.	9/16" Tinted Laminated	5'-4" ±	4'-0" ±	Insect Screen and Frame	
17	Building B Women's Toilet	Existing	E	Aluminum	Clr. Anod.	Existing	8'-0" ±	2'-0" ±	Security Screen and Frame	Repaint Security Screen and Frame
18	Building B Men's Toilet	Existing	E	Aluminum	Clr. Anod.	Existing	8'-0" ±	2'-0" ±	Security Screen and Frame	Repaint Security Screen and Frame

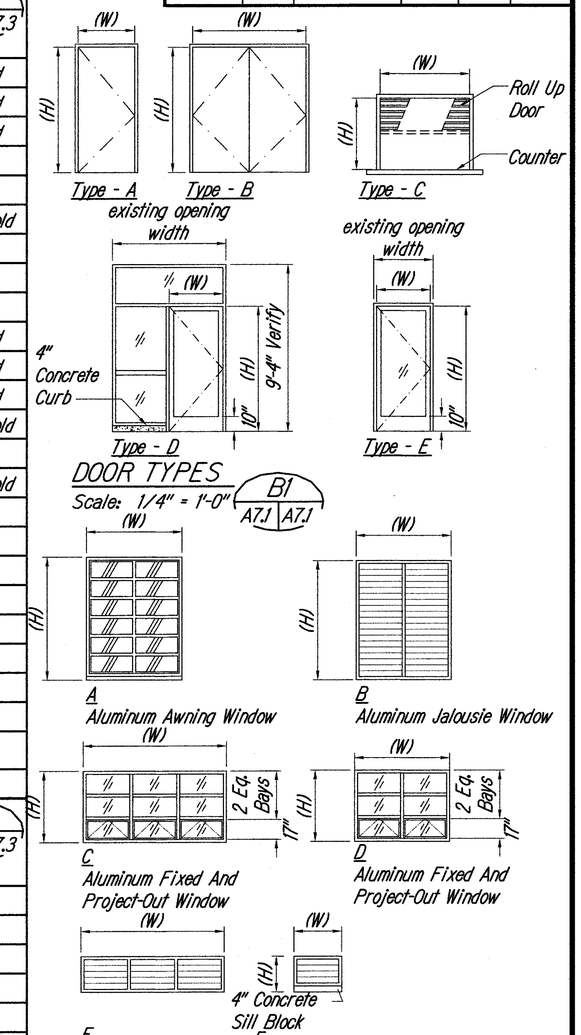

DATE	REVISION
1/9/17	△3 Revised Window Schedule

LOU CHAK CHAN
REGISTERED PROFESSIONAL ARCHITECT
NO. 5401
HAWAII, U.S.A.

EXPIRATION DATE OF THE LICENSE 4/30/2016
THIS WORK WAS PREPARED BY ME OR UNDER MY SUPERVISION

STATE OF HAWAII
DEPARTMENT OF TRANSPORTATION
HIGHWAYS DIVISION

DOOR AND WINDOW SCHEDULES AND TYPES

MOTOR VEHICLE SAFETY OFFICE RENOVATION
Project No. HWY-0-02-08R

Scale: As Noted Date: April, 2016

SURVEY PLOTTED BY
DRAWN BY
TRACED BY
DESIGNED BY
QUANTITIES BY
CHECKED BY
DATE
ORIGINAL PLAN
NOTE BOOK No.

FED. ROAD DIST. NO.	STATE	PROJ. NO.	FISCAL YEAR	SHEET NO.	TOTAL SHEETS
HAWAII	HAW.	HWY-0-02-08R	2016	41	69

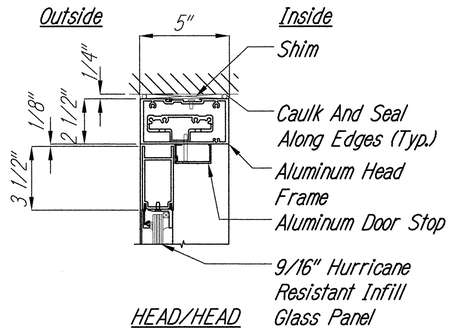

HEAD/HEAD

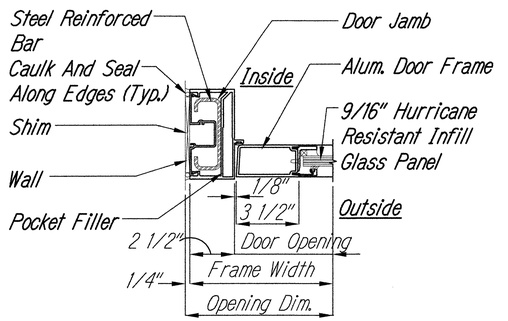

DOOR JAMB

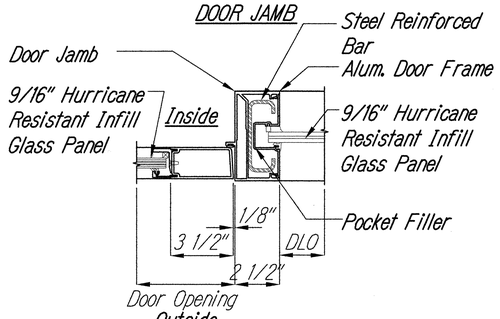

DOOR JAMB/FIXED PANEL

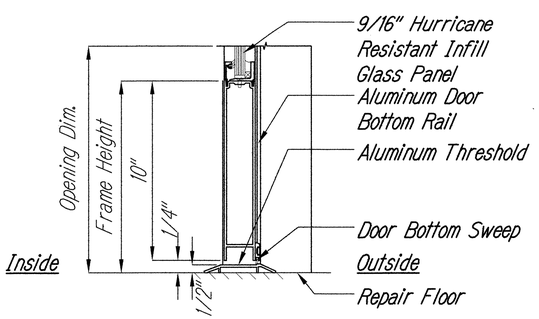

DOOR BOTTOM RAIL

ALUMINUM DOOR DETAIL (A4)

3"=1'-0" A7.1 | A7.2

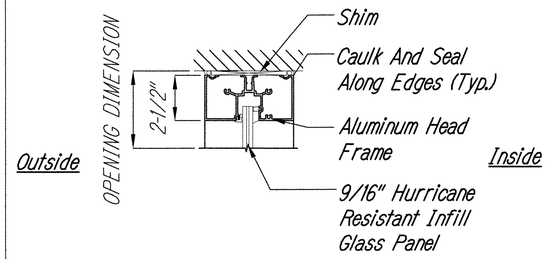

DOOR SIDELITE HEAD

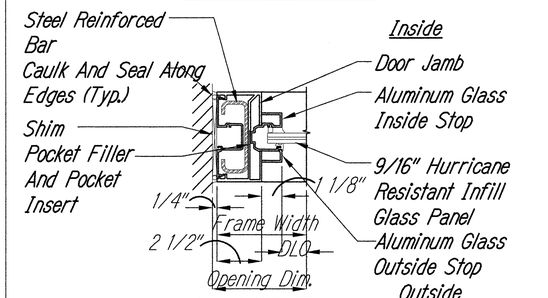

DOOR SIDELITE JAMB

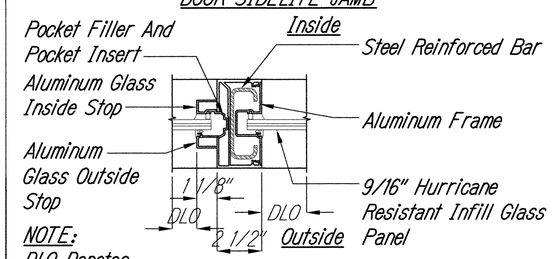

NOTE:
DLO Denotes Daylight Opening

DOOR SIDELITE MULLION

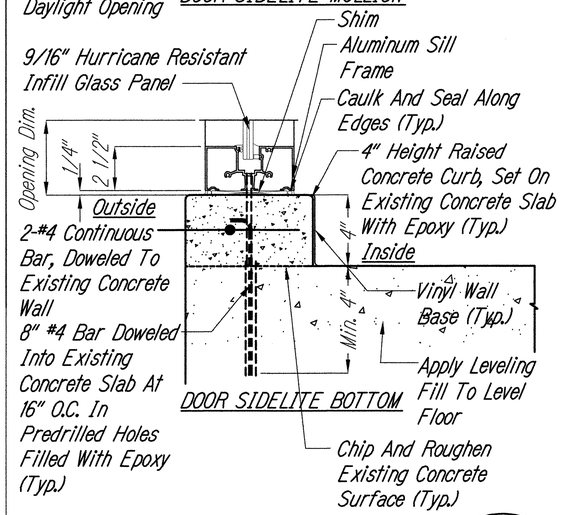

DOOR SIDELITE BOTTOM

ALUMINUM DOOR SIDELITE DETAIL (A3)

3"=1'-0" A7.1 | A7.2

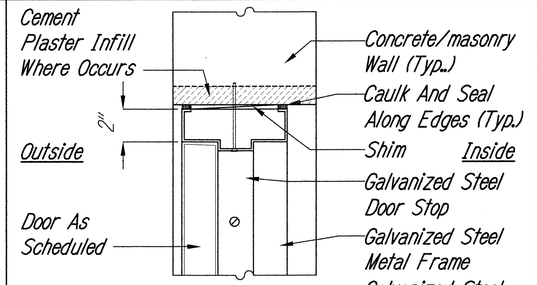

HEAD/JAMB

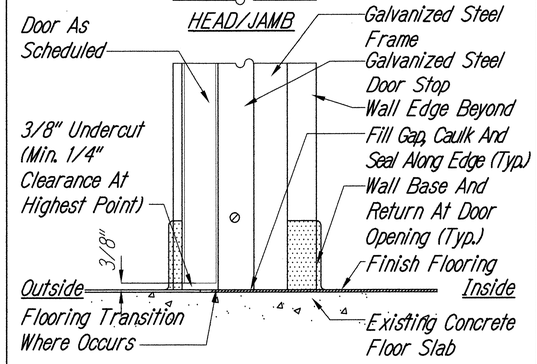

SILL AT INTERIOR DOOR CONDITION

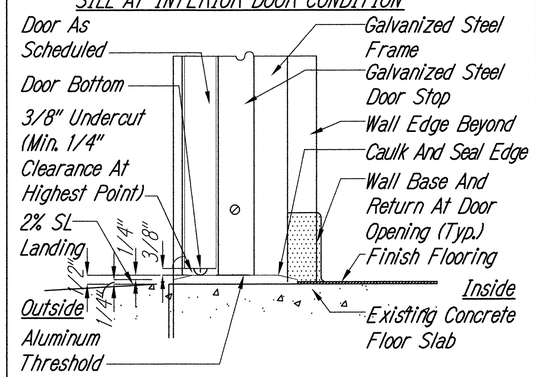

SILL AT EXTERIOR DOOR CONDITION

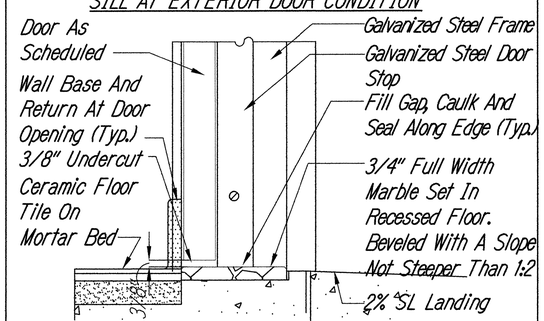

Inside SILL CONDITION AT TOILET ROOM Outside

DOOR DETAILS AT CMU WALLS (A2)

3"=1'-0" A7.1 | A7.2

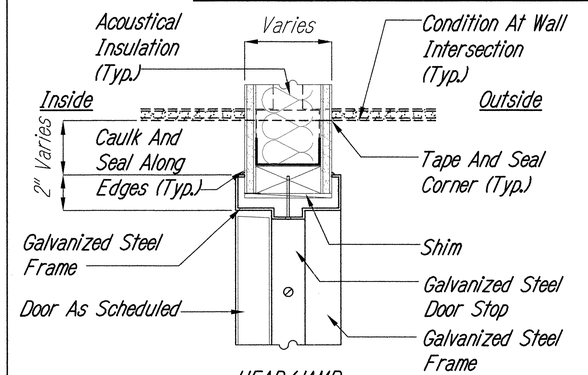

HEAD/JAMB

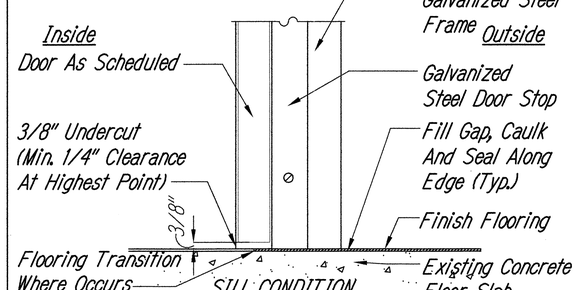

SILL CONDITION

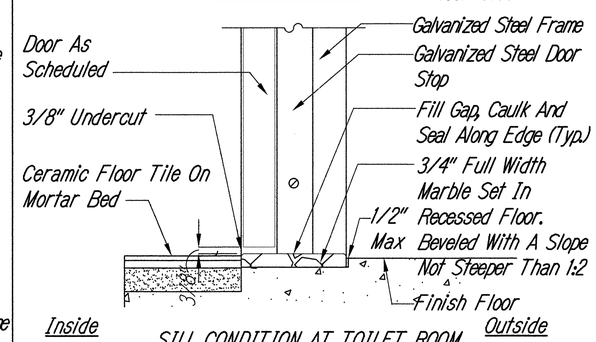

SILL CONDITION AT TOILET ROOM

DOOR DETAIL AT GYPSUM B'D WALLS (A1)

3"=1'-0" A7.1 | A7.2

3" 0 6" 1'
3" = 1'-0"

LOU CHAK CHAN
REGISTERED PROFESSIONAL ARCHITECT
NO. 5401
HAWAII, U.S.A.

EXPIRATION DATE OF THE LICENSE 4/30/2018
THIS WORK WAS PREPARED BY ME OR UNDER MY SUPERVISION

STATE OF HAWAII
DEPARTMENT OF TRANSPORTATION
HIGHWAYS DIVISION

DOOR DETAILS

MOTOR VEHICLE SAFETY OFFICE RENOVATION
Project No. HWY-0-02-08R

Scale: As Noted Date: April, 2016

SHEET No. A7.2 OF 69 SHEETS

ORIGINAL PLAN | SURVEY PLOTTED BY | DRAWN BY | TRACED BY | DESIGNED BY | QUANTITIES BY | CHECKED BY | DATE
NOTE BOOK No.

FED. ROAD DIST. NO.	STATE	PROJ. NO.	FISCAL YEAR	SHEET NO.	TOTAL SHEETS
HAWAII	HAW.	HWY-0-02-08R	2016	42	69

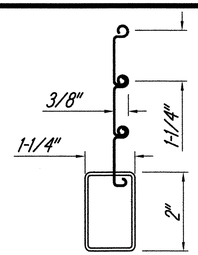

Bottom Bar And Slat Detail

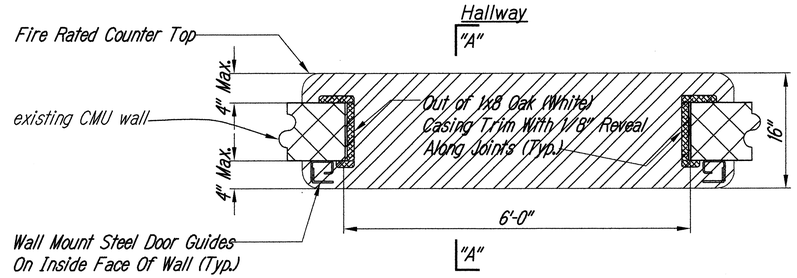

Plan

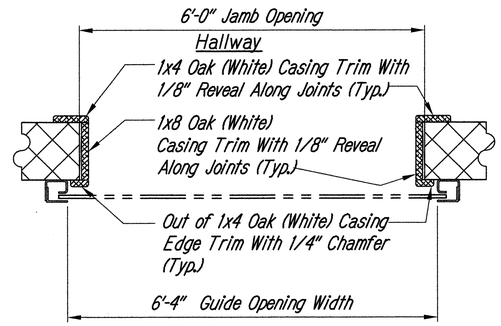

Jamb Opening

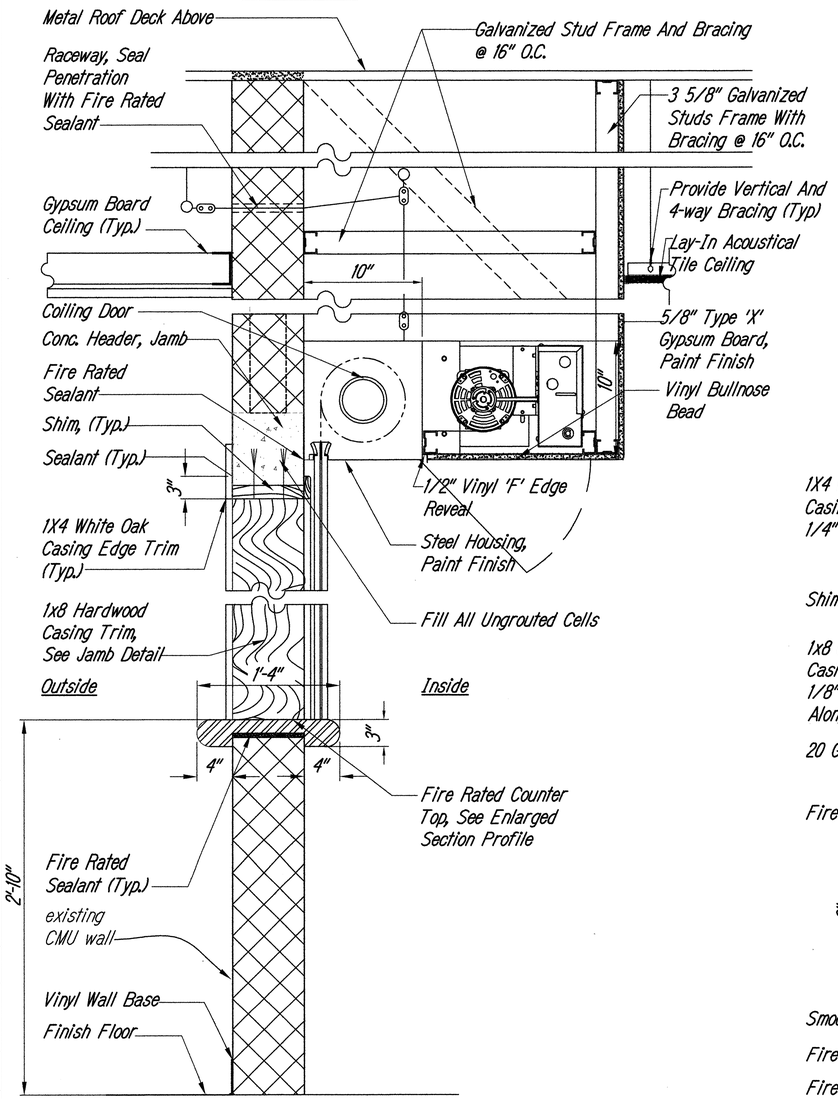

Section-"A"

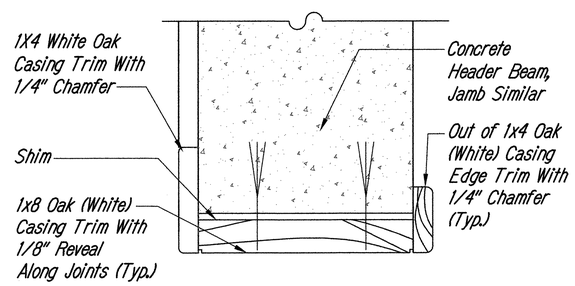

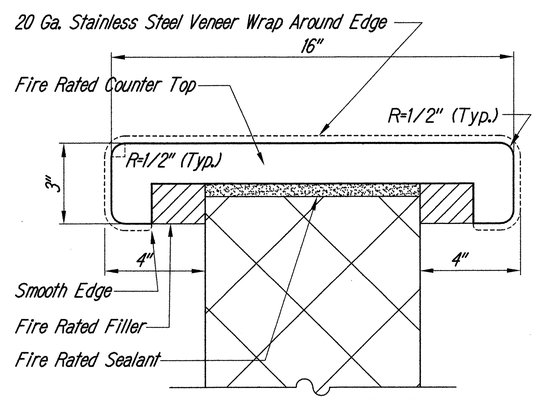

ENLARGED COUNTER TOP SECTION PROFILE

RECEPTION COUNTER AND ROLLING COUNTER FIRE DOOR DETAILS (A1)

Scale: 1 1/2" = 1'-0" A5.4, A7.1 | A7.3

Door Notes:

1. Door dimensions and conditions shown in door schedule and details are only approximate. Contractor shall be fully responsible for measurement and verification of all door openings, sizes, conditions of wall and threshold. Submit shop drawing based on actual dimensions and conditions per Contractor's field Measurement. Obtain approval prior to any ordering of materials.
2. All locksets, unless specified otherwise, shall be mounted at 3'-0" height above finish floor. All pre-existing cutouts, notches, corings in existing door, if not used by new hardware, shall be filled, patched, and refinished. Provide offset cover plate for mounting of new lockset.

Window Notes:

1. Dimensions and conditions shown are only for reference. Contractor shall field measure and verify dimensions of all window openings to ensure fitting of the windows. Contractor shall be solely responsible for any replacement or retro-fit work. Contractor to submit shop drawings based on actual window opening sizes and obtain approval prior to any fabrication.

DOOR AND WINDOW NOTES (C1)

NOT TO SCALE A7.1 | A7.3

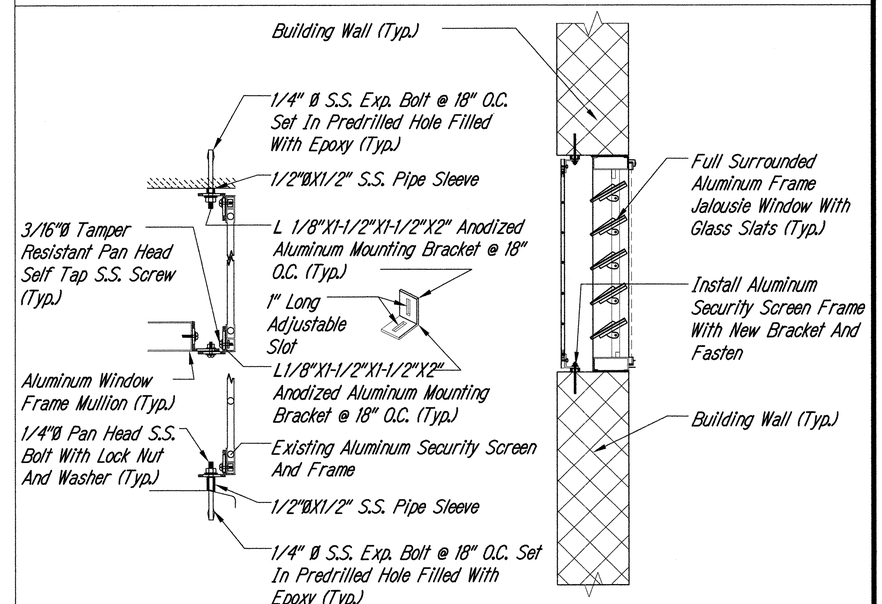

SECURITY SCREEN MOUNTING DETAIL

WINDOW DETAILS (B1)

Scale: 3"=1'-0" A7.1 | A7.3

3" 0 6" 1'
3" = 1'-0"

6" 0 1' 2'
1-1/2" = 1'-0"

LOU CHAK CHAN
REGISTERED PROFESSIONAL ARCHITECT
NO. 5401
HAWAII, U.S.A.

EXPIRATION DATE OF THE LICENSE 4/30/2018
THIS WORK WAS PREPARED BY ME OR UNDER MY SUPERVISION

STATE OF HAWAII
DEPARTMENT OF TRANSPORTATION
HIGHWAYS DIVISION

ROLLING COUNTER FIRE DOOR DETAILS

MOTOR VEHICLE SAFETY OFFICE RENOVATION
Project No. HWY-0-02-08R

Scale: As Noted Date: April, 2016

SHEET No. A7.3 OF 69 SHEETS

ORIGINAL PLAN | SURVEY PLOTTED BY | DRAWN BY | TRACED BY | DESIGNED BY | QUANTITIES BY | CHECKED BY | DATE
NOTE BOOK No.

FED. ROAD DIST. NO.	STATE	PROJ. NO.	FISCAL YEAR	SHEET NO.	TOTAL SHEETS
HAWAII	HAW.	HWY-0-02-08R	2016	43	69

Sign Schedule

Sign No.	Sign Message	Sign Type
11	EXIT	A
12	MEN	B
13	OFFICE 3	A
14	OFFICE 2	A
15	OFFICE 1	A
16	WOMEN	B
17	MOTOR VEHICLE SAFETY OFFICE 'A'	C
18	MOTOR VEHICLE SAFETY OFFICE 'A'	C
19	EXIT	A
20	ACCESSORY CLASSROOM	A
21	RECEPTION	A
22	OPEN OFFICE	A
23	RECEPTION	A
24	EXIT	A
25	MOTOR VEHICLE SAFETY OFFICE 'A'	C
31	MOTOR VEHICLE SAFETY OFFICE 'B'	C
32	MOTOR VEHICLE SAFETY OFFICE 'B'	C
33	EXIT	A
34	MEN	B
35	STORAGE	A
36	WOMEN	B
37	OFFICES	A
38	EXIT	A
39	OFFICE 1	A
40	OFFICE 2	A
41	COMPUTER ROOM	A
42	LOUNGE	A
43	OFFICE 3	A
44	COPY ROOM	A
45	OFFICE 4	A
46	COPY ROOM	A
47	CLERK	A
48	EXIT	A

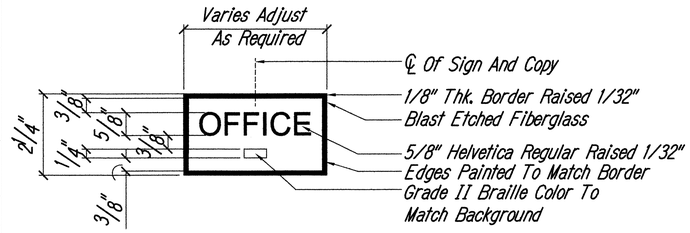

Sign Type A
Scale: 6" = 1'-0"

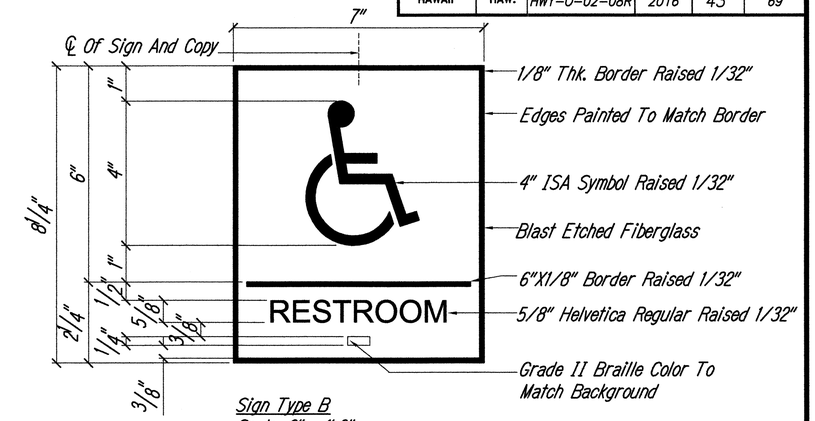

Sign Type B
Scale: 6" = 1'-0"

Sign Type C
Scale: 3" = 1'-0"

Notes:

1. For all signs, the mounting height shall be 48" minimum above the finish floor to the baseline of the lowest tactile characters and 60" maximum above the finish floor to the baseline of the highest tactile characters.

2. Where a tactile sign is provided at door, the sign shall be located alongside the door at the latch side. Where a tactile sign is provided at double door with one active leaf, The sign shall be located on the inactive leaf. Where a tactile sign is provided st double doors with two active leafs, the sign shall be located to the right of the right hand door. Where there is no wall space at the latch side of a single door or at the right side of double doors, signs shall be located on the nearest adjacent wall.

SIGN TYPES (B2)
Scale: As Noted — A2.3, A2.4 | A7.4

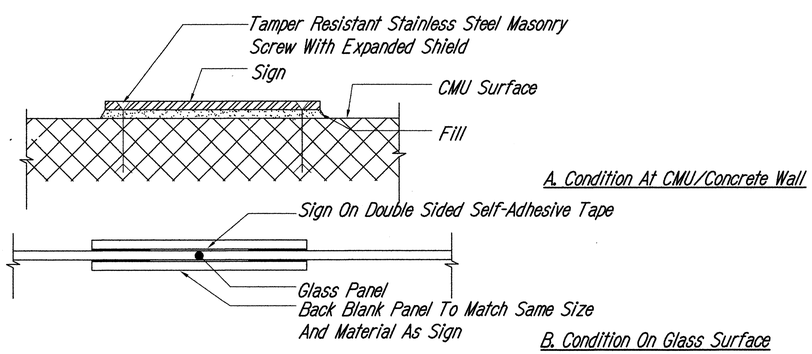

MOUNTING DETAILS (A1)
Scale: 6" = 1'-0" — A7.4 | A7.4

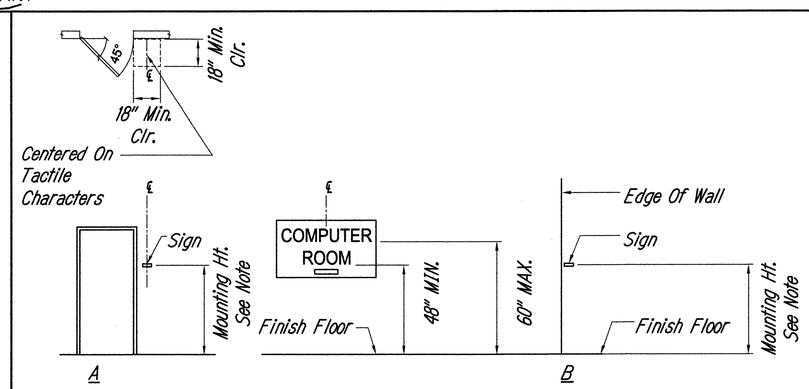

TYPICAL SIGN MOUNTING LOCATIONS (A2)
Scale: 1/4" = 1'-0" — A7.4 | A7.4

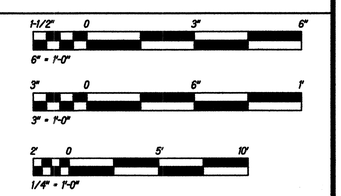

LAI CHAK CHAN
REGISTERED PROFESSIONAL ARCHITECT
NO. 5401
HAWAII, U.S.A.

EXPIRATION DATE OF THE LICENSE 4/30/2018
THIS WORK WAS PREPARED BY ME OR UNDER MY SUPERVISION

STATE OF HAWAII
DEPARTMENT OF TRANSPORTATION
HIGHWAYS DIVISION

SIGN SCHEDULE
TYPES AND DETAILS
MOTOR VEHICLE SAFETY OFFICE RENOVATION
Project No. HWY-0-02-08R
Scale: As Noted — Date: April, 2016

SHEET No. A7.4 OF 69 SHEETS

ORIGINAL PLAN — NOTE BOOK No. — SURVEY PLOTTED BY — DRAWN BY — TRACED BY — DESIGNED BY — QUANTITIES BY — CHECKED BY — DATE

FED. ROAD DIST. NO.	STATE	PROJ. NO.	FISCAL YEAR	SHEET NO.	TOTAL SHEETS
HAWAII	HAW.	HWY-0-02-08R	2016	44	69

Color And Material Index

Code	General Area Or Description	Manufacturer Or Approved Equal	Pattern, Design, Color Number And Name Or Approved Equal	Remark
Group 1: Vinyl Floor Tile				
RT-1	12"X12" Resilient Floor Tile	Armstrong	51811 Antique White	
Group 2: Base				
B-1	4" Vinyl Wall Cove Base For Resilient Floor Tile	Burke	244 Off White	
Group 3: Ceramic Tiles				
CT-1	Porcelain Floor Tile	Daltile	Color, Pattern and Size To Match Existing Women Restroom	
CT-2	4 1/2"x4 1/2" Ceramic Wall Tile	Daltile	Color, Pattern and Size To Match Existing Women Restroom	
CT-3	4 1/2"x4 1/2" Ceramic Base Tile	Daltile	Color, Pattern and Size To Match Existing Women Restroom	
Group 4: Paint And Coating				
P-1	Interior Walls	ICI Dulux	2005 French White	Semi-Gloss Finish
P-2	Interior Gypsum Board Ceiling	ICI Dulux	1016 White on White	Eggshell Finish
P-3	Doors And Frames	ICI Dulux	266 Residence Row	High-Gloss Finish
P-4	Low Wall Wood Cap	--	Natural Stain	
P-5	Galvanized Steel Metal Handrails And Guardrails	ICI Dulux	453 Monterey Cliffs	High Gloss Finish
P-6	Exterior Walls And Downspouts	ICI Dulux	463 Neutral Wheat	Semi-Gloss Finish
P-7	Soffit	ICI Dulux	550 Alencon Lace	Semi-Gloss Finish
Group 5: Exterior Finish System				
EFS-1	Exterior Finish System	STO	1.0 Fine Texture, Color To Match Exterior Wall Color	
Group 6: Aluminum Storefront And Window				
AL-1	Aluminum Frame	Kawneer	Clear Anodized Aluminum	
Group 7: Signage				
SN-1	Background Of Plate Sign	Best Signs	Bone White	
SN-2	Verbiage And Symbol	Best Signs	Rich Brown	
Group 8: Acoustical Ceiling				
ACT-1	2X4 Acoustical Ceiling Tile	Armstrong	Fine Fissured Square Lay-In/Medium Texture #1811	
Group 9: Toilet Partition				
TP-1	Phenolic Toilet Partition	Bobrick	P-887 Beige Grit	
Group 10: Plastic Laminates				
PL-1	Countertop	Wilsonart	4672-60 Curry Tigris	
PL-2	Cabinet	Wilsonart	7061-60 Natural Pear	
Group 11: Roof				
MT-1	Metal Mansard Roof Panel	Macsteel	Terra Cotta	
MT-2	Metal Main Roof Panel	Macsteel	Mauna Kea White	
RC-1	Fluid-Applied Roof Coating System	Hydrostop	White	

Room Finish Schedule

Building	Room Name	Floor	Wall Base	Wainscot	Wall	Door And Frame	Ceiling	Remarks
A	Classroom	RT-1	B-1	---	P-1	P-3	ACT-1	---
A	Open Office	RT-1	B-1	---	P-1	P-3	ACT-1	---
A	Reception	RT-1	B-1	---	P-1	P-3	ACT-1	---
A	Office #1	RT-1	B-1	---	P-1	P-3	ACT-1	---
A	Office #2	RT-1	B-1	---	P-1	P-3	ACT-1	---
A	Office #3	RT-1	B-1	---	P-1	P-3	ACT-1	---
A	Toilet	CT-1	CT-3	CT-2	P-1	P-3	P-2	Refinish Portion Of Existing Gypsum Board Wall
A	Accessible Toilet	CT-1	CT-3	CT-2	P-1	P-3	P-2	---
B	Men's Toilet	CT-1	CT-3	CT-2	P-1	P-3	ACT-1	---
B	Women's Toilet	CT-1	CT-3	CT-2	P-1	P-3	ACT-1	---
B	Water Cooler Area	RT-1	B-1	---	P-1	P-3	ACT-1	---
B	Office #1	RT-1	B-1	---	P-1	P-3	ACT-1	---
B	Office #2	RT-1	B-1	---	P-1	P-3	ACT-1	---
B	Office #3	RT-1	B-1	---	P-1	P-3	ACT-1	---
B	Office #4	RT-1	B-1	---	P-1	P-3	ACT-1	---
B	Computer Room	RT-1	B-1	---	P-1	P-3	ACT-1	---
B	Clark's Station	RT-1	B-1	---	P-1	P-3	ACT-1	---
B	Lounge	RT-1	B-1	---	P-1	P-3	ACT-1	---
B	Copy Room	RT-1	B-1	---	P-1	P-3	ACT-1	---
B	Open Office	RT-1	B-1	---	P-1	P-3	ACT-1	---
B	Hallway	RT-1	B-1	---	P-1	P-3	P-2	---

Finish And Paint Note:

Remove all existing surface mounted fasteners, brackets, abandoned utility boxes, nailer and hangers, wiring, pipings and conduits.

Fill and patch all voids, gaps and holes, patch and repair wall.

Paint and refinish all interior and exterior, existing and new paintable surfaces, complete.

LOU CHAK CHAN
REGISTERED PROFESSIONAL ARCHITECT
NO. 5401
HAWAII, U.S.A.

EXPIRATION DATE OF THE LICENSE 4/30/2016
THIS WORK WAS PREPARED BY ME OR UNDER MY SUPERVISION

STATE OF HAWAII
DEPARTMENT OF TRANSPORTATION
HIGHWAYS DIVISION

ROOM FINISH SCHEDULE
COLOR & MATERIAL INDEX
MOTOR VEHICLE SAFETY OFFICE RENOVATION
Project No. HWY-0-02-08R

Scale: As Noted Date: April, 2016

SHEET No. A8.1 OF 69 SHEETS

ORIGINAL PLAN
NOTE BOOK No.
SURVEY PLOTTED BY
DRAWN BY
TRACED BY
DESIGNED BY
QUANTITIES BY
CHECKED BY
DATE

FED. ROAD DIST. NO.	STATE	PROJ. NO.	FISCAL YEAR	SHEET NO.	TOTAL SHEETS
HAWAII	HAW.	HWY-0-02-08R	2016	C.O. 45	69

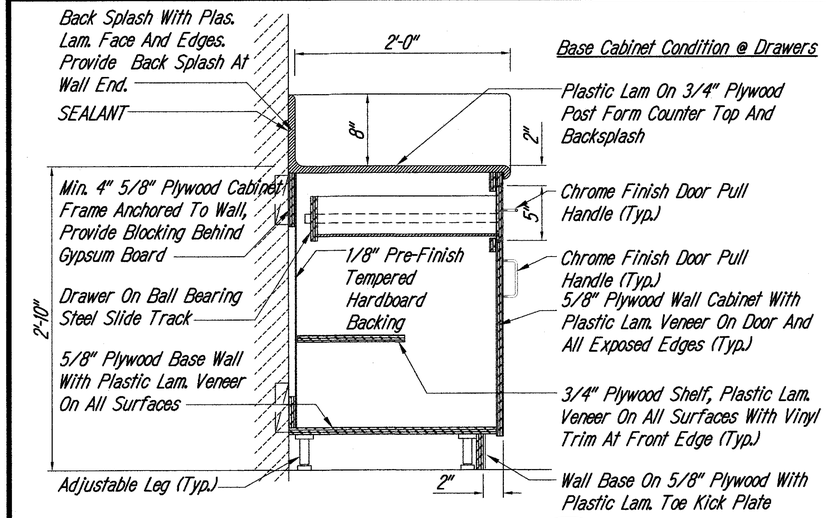

Base Cabinet Condition @ Drawers

COUNTER AND BASE CABINET SECTION C1 (A5.3 | A8.2)

NOT TO SCALE

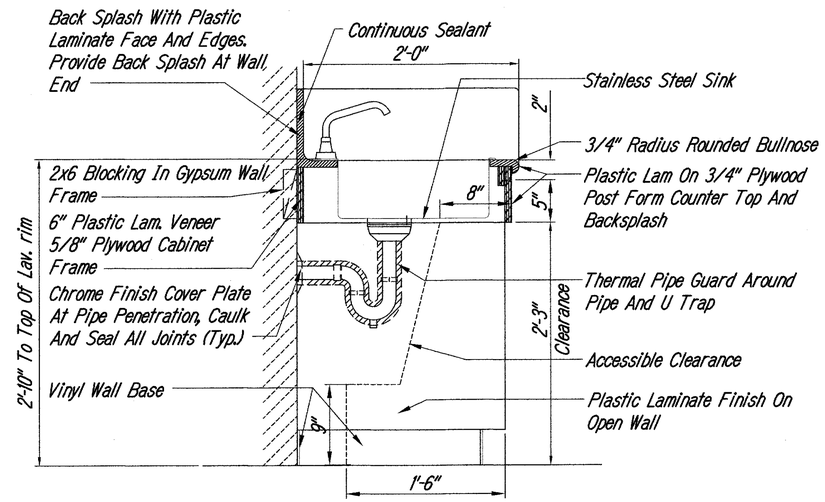

Base Cabinet Condition @ Sink

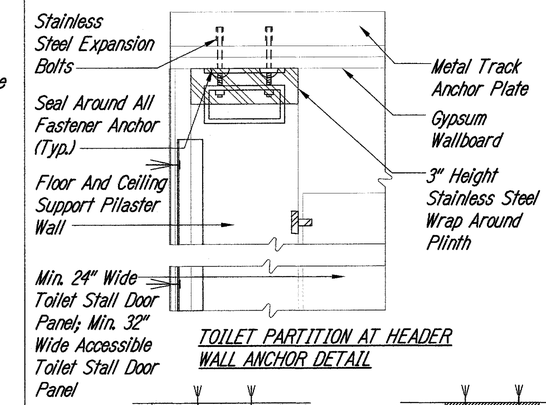

TOILET PARTITION AT HEADER WALL ANCHOR DETAIL

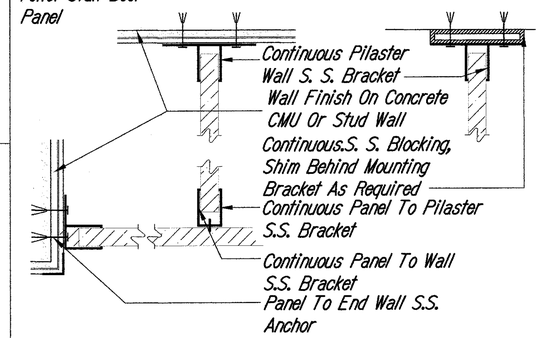

TOILET PARTITION AT JAMB, WALL AND PARTITION ANCHOR DETAIL

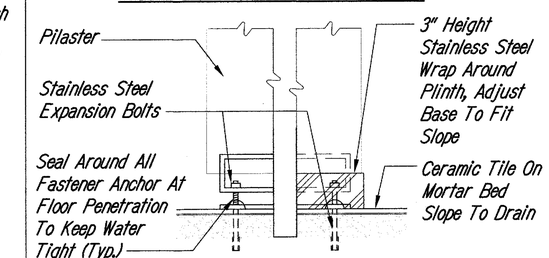

TOILET PARTITION AT SILL FLOOR ANCHOR DETAIL (HEAD SIMILAR)

TOILET PARTITION DETAILS B1 (A2.4, A5.4 | A8.2)

NOT TO SCALE

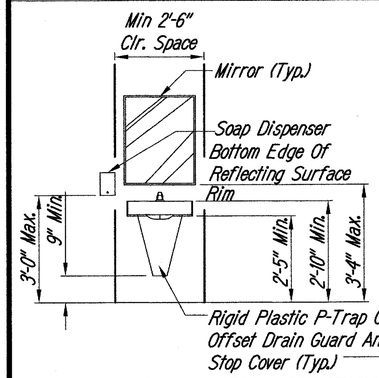

FRONT ELEVATION LAVATORY WITH STAINLESS STEEL FRAMED MIRROR AND SOAP DISPENSER

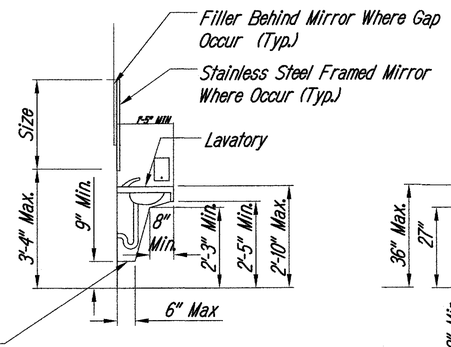

SIDE ELEVATION LAVATORY WITH STAINLESS STEEL FRAMED MIRROR AND SOAP DISPENSER

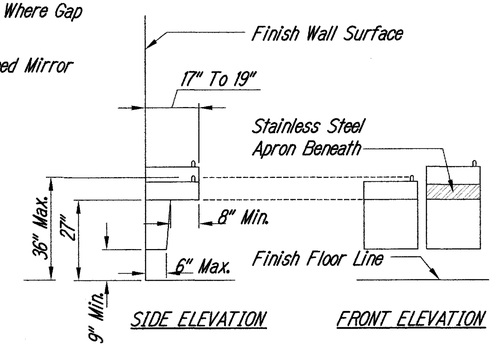

SIDE ELEVATION FRONT ELEVATION

DRINKING FOUNTAIN AND ELECTRICAL WATER COOLER

NOTES:

Mounting position shown in the plan is for general reference of toilet accessories. The height and location shown do not reflect the actual design and layout, left or right position. Contractor shall field verify and confirm the location with actual layout and construction.

Provide solid blocking, mounting and nailer plate inside stud wall for the mounting of wall mounted bath accessories. Provide access panel with finish surface for access to conceal toilet accessories control valve, sensor control, electrical power and water supply controls and connections.

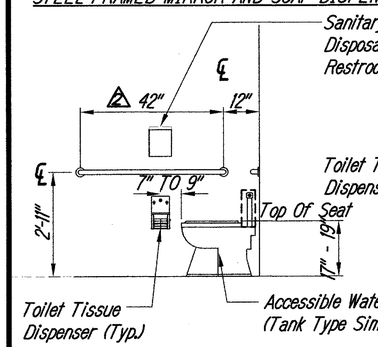

ACCESSIBLE WATER CLOSET, GRAB BAR, AND TOILET PAPER HOLDER

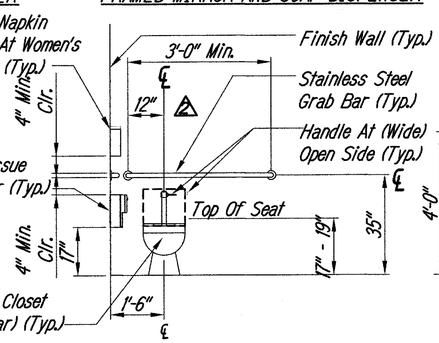

ACCESSIBLE WATER CLOSET, AND GRAB BARS

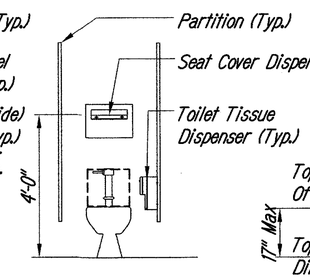

WATER CLOSET STALL

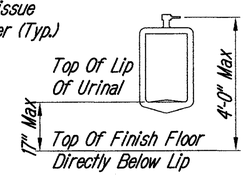

ACCESSIBLE URINAL STALL

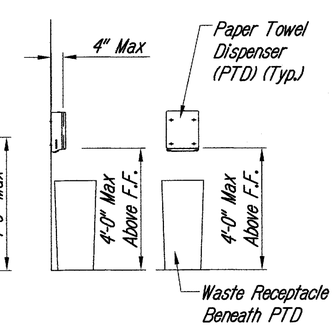

SURFACE MOUNTED PAPER TOWEL DISPENSER AND FREE STANDING WASTE RECEPTACLE

TYPICAL TOILET ACCESSORIES MOUNTING DETAILS A1 (A5.2, A5.4 | A8.2)

SCALE: 1/2" = 1'-0"

1" 6" 0 1' 2' 3' 4' 5'

1/2" = 1'-0"

	DATE	REVISION
2	8/11/16	Clarified Dimension

STATE OF HAWAII
DEPARTMENT OF TRANSPORTATION
HIGHWAYS DIVISION

LOU CHAK CHAN
REGISTERED PROFESSIONAL ARCHITECT
NO. 5401
HAWAII, U.S.A.

EXPIRATION DATE OF THE LICENSE 4/30/2016
THIS WORK WAS PREPARED BY ME OR UNDER MY SUPERVISION

MILLWORK, TOILET PARTITION AND ACCESSORY DETAILS

MOTOR VEHICLE SAFETY OFFICE RENOVATION

Project No. HWY-0-02-08R

Scale: As Noted Date: April, 2016

SHEET No. A8.2 OF 69 SHEETS

ORIGINAL PLAN | SURVEY PLOTTED BY | DRAWN BY | TRACED BY | DESIGNED BY | QUANTITIES BY | CHECKED BY | NOTE BOOK No. | DATE

C.O. 45