FED. ROAD DIST. NO.	STATE	PROJECT NO.	FISCAL YEAR	SHEET NO.	TOTAL SHEETS
HAWAII	HAW.	STP-1500(35)	2008	35	41

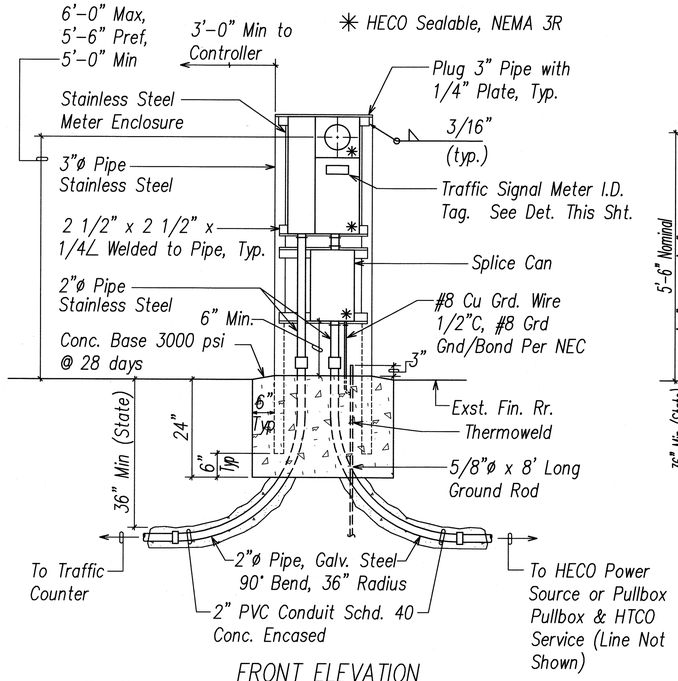

FRONT ELEVATION

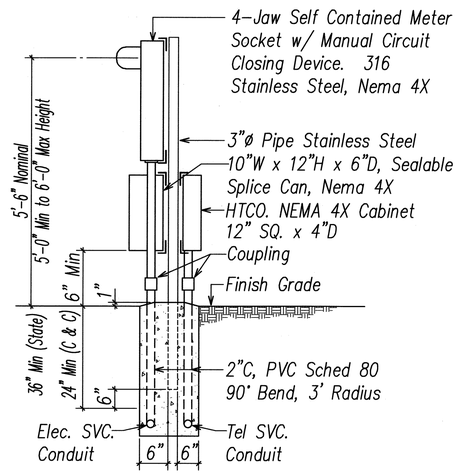

SIDE ELEVATION

NOTES:

1. Contractor Shall Make All Electrical Connection to Counter, Provide 2P50A Breaker, Ground and 2" Conduit.
2. All Conduits to Contain a Polyolefin Pull Line. (Jet Line Cat #232 or Equiv)
3. Pedestal Shall Be Stainless Steel.
4. All Fastening Bolts, Nuts & Washers Shall Be Stainless Steel. Provide One Coat ShopPrimer & Two Coats of Acrylic Enamel Finish.
5. Provide 4 Ft Clearance in Front of Meter.

A / E-4 METER PEDESTAL FOR UNDERGROUND SERVICE

Not To Scale

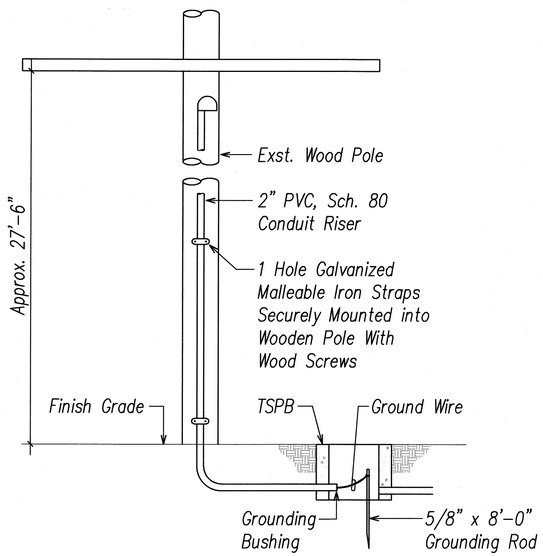

SERVICE RISER AT EXISTING WOOD POLE

Not To Scale

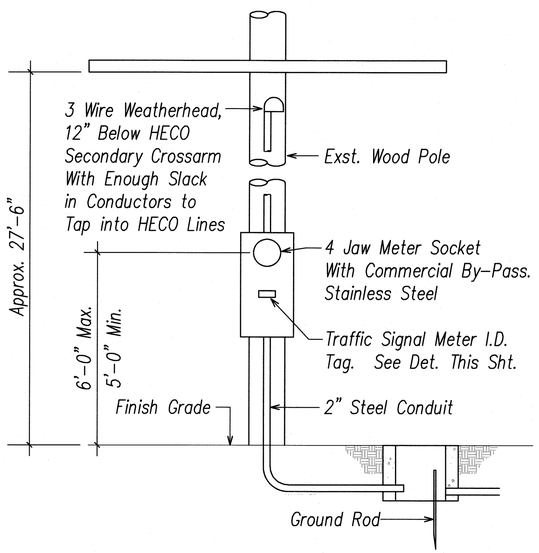

NOTE: Maintain 4'-0" Clear and Face Meter So That A Meter Reader will Face Oncoming Traffic

NEW METER INSTALLATION ON EXIST. WOOD POLE

Not To Scale

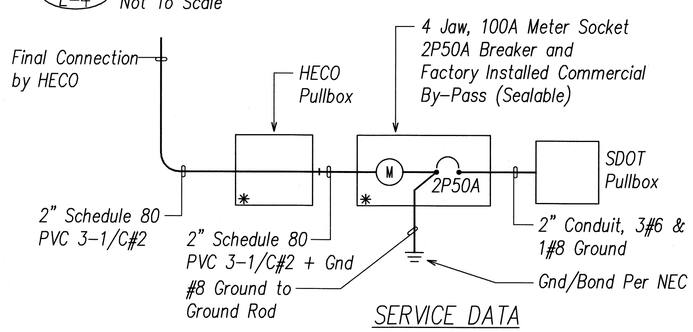

SERVICE DATA

1. Service Voltage: 1 Phase 3 Wire 120/240V
2. Load Data: Connected – 5 KVA Estimated Demand – 2 KVA

✳ HECO Sealable, NEMA 3R

ONE-LINE DIAGRAM

Not To Scale

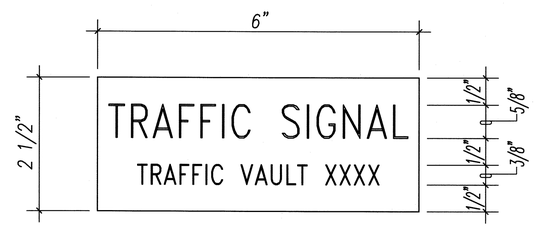

NOTES:

1. Use 3-Ply Laminated Flexible Plastic, Black-White-Black Thickness: Black Cap Sheet – 0.010", White Base Sheet – 0.052", Black Base Sheet – 0.010".
2. Attach to Meter Box Using Scotch 3M Brand Very High Bond (VHB) Double Coated Acrylic Foam Tape or Equivalent.
3. Letters/Numbers Shall Be 1/16" Stroke, (White in Color).
4. Letters/Numbers Shall Be Inscribed By Cutting Through "Black Cap Sheet" to Expose White Letters/Numbers.

METER I.D. TAG DETAIL

Not To Scale

STEVEN H. SAKAI LICENSED PROFESSIONAL ENGINEER No. 7637-E HAWAII, U.S.A.
EXP. 4/30/2010
THIS WORK WAS PREPARED BY ME OR UNDER MY SUPERVISION

STATE OF HAWAII
DEPARTMENT OF TRANSPORTATION
HIGHWAYS DIVISION

HECO AND HTCO SERVICE DETAILS

TRAFFIC COUNTING STATIONS AT VARIOUS LOCATIONS

F.A.P. NO. STP-1500(35)

Scale: Not to Scale Date: June 2008

SHEET No. E-4 OF 7 SHEETS

ORIGINAL PLAN | NOTE BOOK | No. | SURVEY PLOTTED BY | DRAWN BY | TRACED BY | DESIGNED BY | QUANTITIES BY | CHECKED BY | DATE

LAST SAVE: 06/17/08 @ 10:15:07 BY: RN PLOT SC 1"=0"
Z:\JOBS\PROJECTS\35037_HECO