FED. ROAD DIST. NO.	STATE	PROJ. NO.	FISCAL YEAR	SHEET NO.	TOTAL SHEETS
HAWAII	HAW.	HWY-O-01-12	2012	22	123

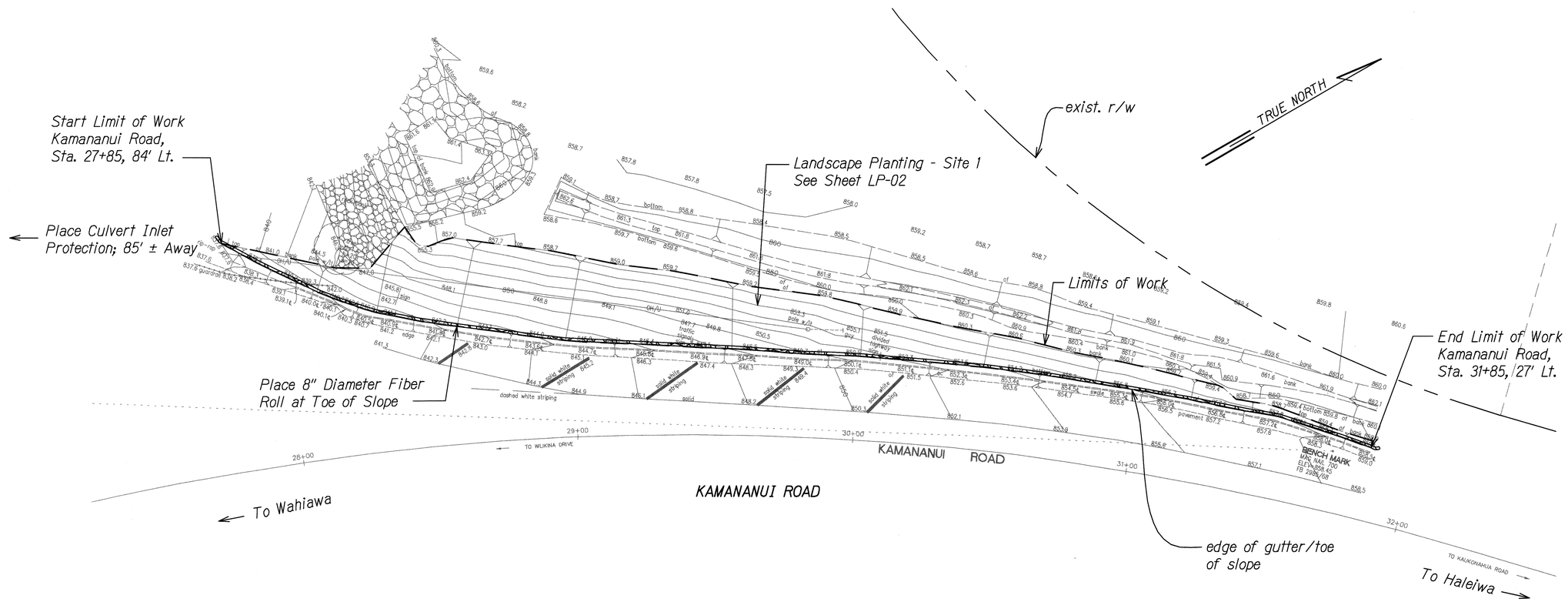

EROSION CONTROL PLAN SITE 1

Scale: 1" = 20'-0"

Estimated Area of Grassing Measured Along Slope Face: 7,000 SF

Notes:

1. Install erosion control matting on slopes greater than 3:1. See Sheet LP-02.
2. For erosion mat details, see Sheets EC-42 & 43.

JASON H. LAU
LICENSED PROFESSIONAL ENGINEER
NO. 9360-C
HAWAII USA

4/30/12
EXP. DATE

This work was prepared by me or under my supervision.

STATE OF HAWAII
DEPARTMENT OF TRANSPORTATION
HIGHWAYS DIVISION

EROSION CONTROL PLAN
SITE 1

SLOPE IMPROVEMENTS FOR EROSION CONTROL AT VARIOUS SITES ON OAHU, PHASE 5
Project No. HWY-O-01-12

Scale: 1" = 20' Date: April 2012

SHEET No. EC-1 OF 50 SHEETS

ORIGINAL PLAN | SURVEY PLOTTED BY | DRAWN BY | TRACED BY | DESIGNED BY | QUANTITIES BY | CHECKED BY | DATE | NOTE BOOK | No.

ECP_1.DWG 1/27/2012 9:20:40 AM

FED. ROAD DIST. NO.	STATE	PROJ. NO.	FISCAL YEAR	SHEET NO.	TOTAL SHEETS
HAWAII	HAW.	HWY-O-01-12	2012	23	123

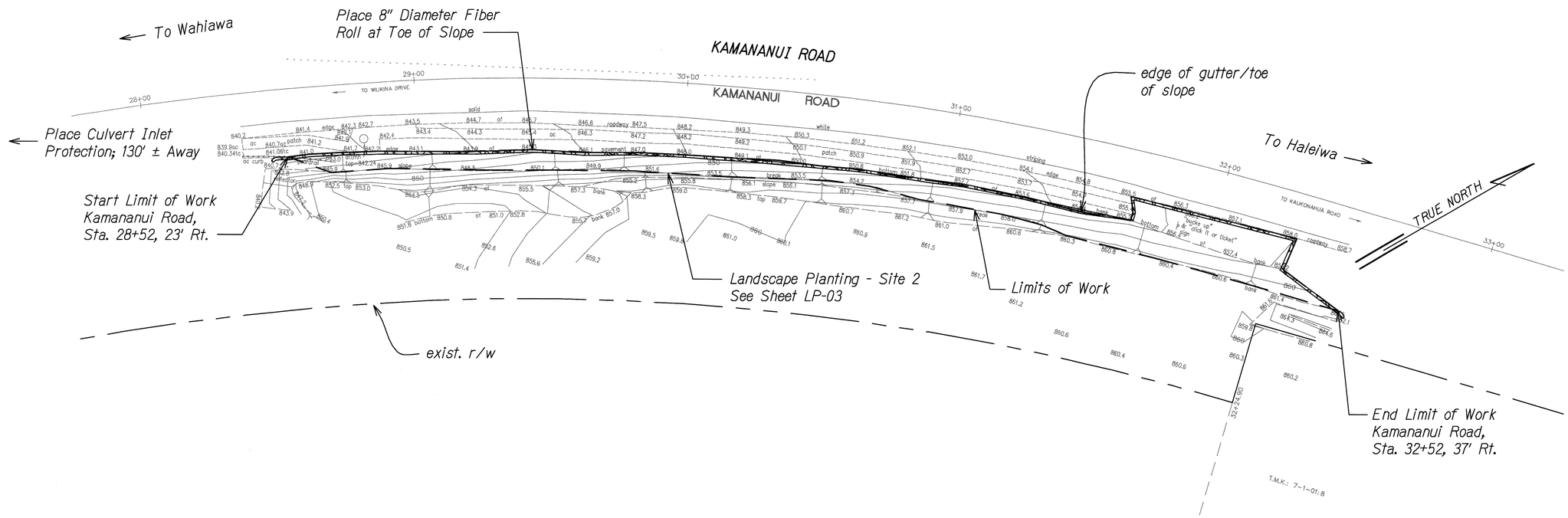

EROSION CONTROL PLAN SITE 2

Scale: 1" = 20'-0"

Estimated Area of Grassing Measured Along Slope Face: 3,500 SF

Notes:

1. Install erosion control matting on slopes greater than 3:1. See Sheet LP-03.
2. For erosion mat details, see Sheets EC-42 & 43.

ORIGINAL PLAN	SURVEY PLOTTED BY	DATE
	DRAWN BY	
	TRACED BY	
NOTE BOOK	DESIGNED BY	
	QUANTITIES BY	
N.	CHECKED BY	

ECP 2.DWG 1/30/2012 12:41:03 PM

JASON H. LAU LICENSED PROFESSIONAL ENGINEER NO. 9360-C HAWAII USA

4/30/12
EXP. DATE

This work was prepared by me or under my supervision.

STATE OF HAWAII
DEPARTMENT OF TRANSPORTATION
HIGHWAYS DIVISION

EROSION CONTROL PLAN SITE 2

SLOPE IMPROVEMENTS FOR EROSION CONTROL AT VARIOUS SITES ON OAHU, PHASE 5

Project No. HWY-O-01-12

Scale: 1" = 20' Date: April 2012

SHEET No. EC-2 OF 50 SHEETS

FED. ROAD DIST. NO.	STATE	PROJ. NO.	FISCAL YEAR	SHEET NO.	TOTAL SHEETS
HAWAII	HAW.	HWY-O-01-12	2012	24	123

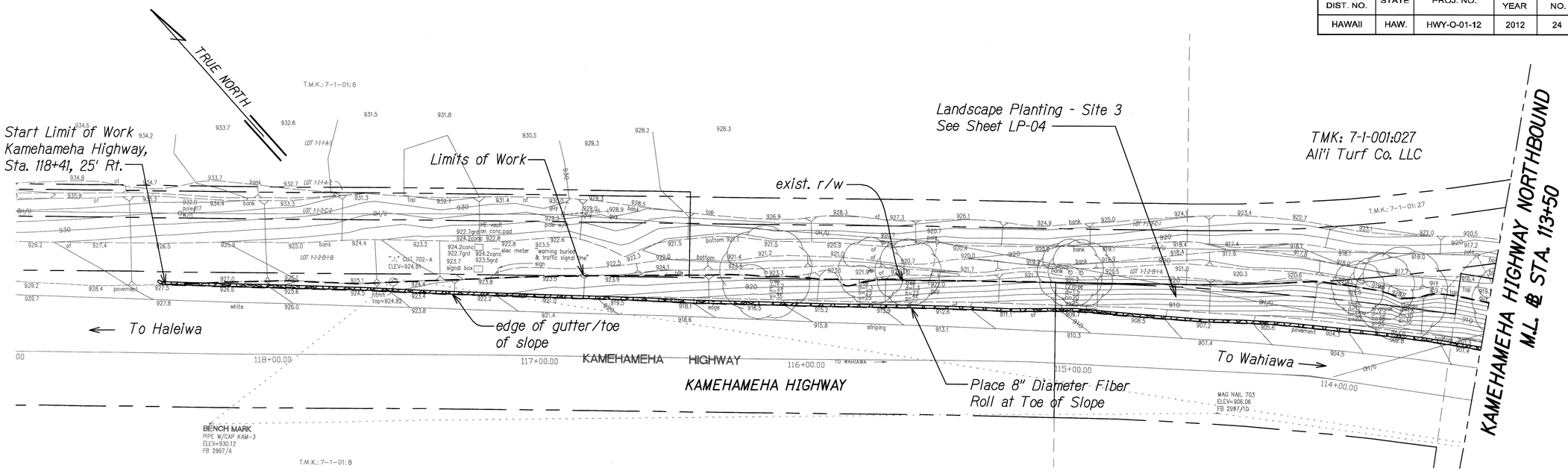

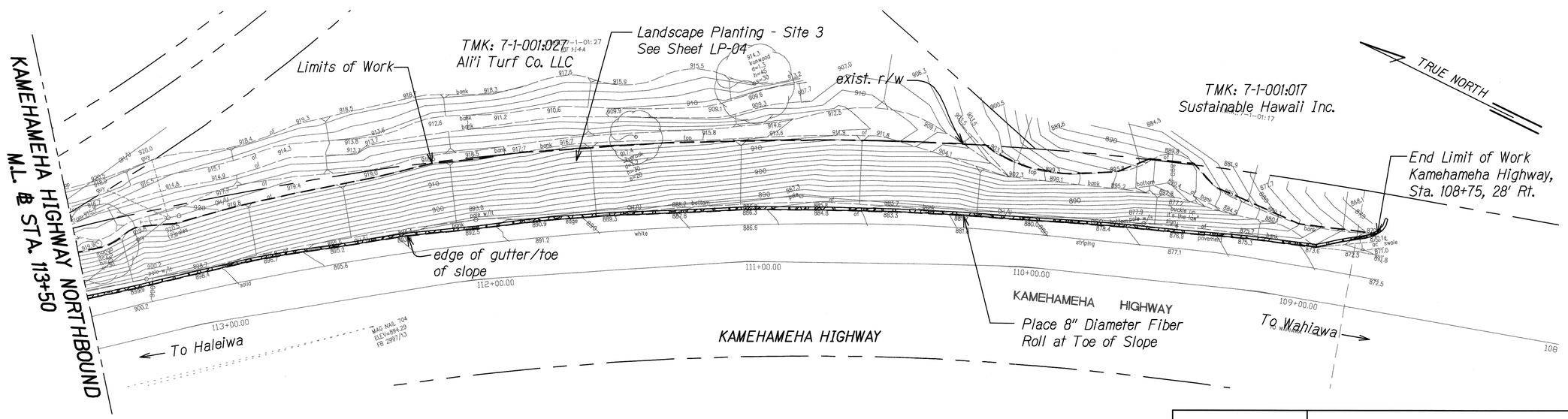

Notes:

1. Install erosion control matting on slopes greater than 3:1. See Sheet LP-04.
2. For erosion mat details, see Sheets EC-42 & 43.

EROSION CONTROL PLAN SITE 3

Scale: 1" = 20'-0"

Estimated Area of Grassing Measured Along Slope Face: 15,270 SF

JASON H. LAU
LICENSED PROFESSIONAL ENGINEER
NO. 9360-C
HAWAII USA
4/30/12
EXP. DATE
This work was prepared by me or under my supervision.

STATE OF HAWAII
DEPARTMENT OF TRANSPORTATION
HIGHWAYS DIVISION

EROSION CONTROL PLAN
SITE 3

SLOPE IMPROVEMENTS FOR EROSION CONTROL
AT VARIOUS SITES ON OAHU, PHASE 5
Project No. HWY-O-01-12
Scale: 1" = 20' Date: April 2012

SHEET No. EC-3 OF 50 SHEETS

ORIGINAL PLAN | SURVEY PLOTTED BY | DRAWN BY | TRACED BY | NOTE BOOK | DESIGNED BY | QUANTITIES BY | CHECKED BY | DATE | No.

ECP 3.DWG 2/1/2012 8:05:35 AM

FED. ROAD DIST. NO.	STATE	PROJ. NO.	FISCAL YEAR	SHEET NO.	TOTAL SHEETS
HAWAII	HAW.	HWY-O-01-12	2012	25	123

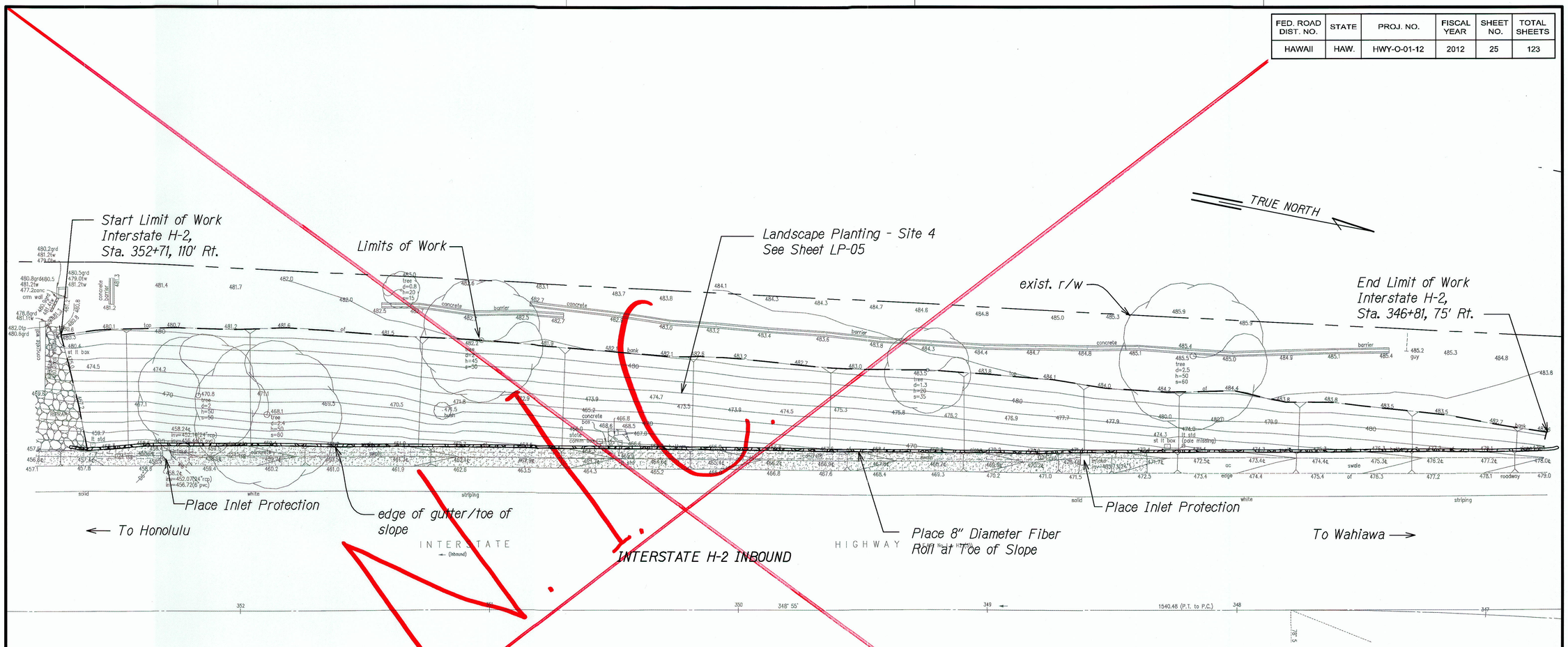

EROSION CONTROL PLAN SITE 4

Scale: 1" = 20'-0"

Estimated Area of Grassing Measured Along Slope Face: 19,750 SF

Notes:

1. Install erosion control matting on slopes greater than 3:1. See Sheet LP-05.
2. For erosion mat details, see Sheets EC-42 & 43.

JASON H. LAU
LICENSED PROFESSIONAL ENGINEER
NO. 9360-C
HAWAII USA
4/30/12
EXP. DATE
This work was prepared by me or under my supervision.

STATE OF HAWAII
DEPARTMENT OF TRANSPORTATION
HIGHWAYS DIVISION

EROSION CONTROL PLAN SITE 4

SLOPE IMPROVEMENTS FOR EROSION CONTROL AT VARIOUS SITES ON OAHU, PHASE 5
Project No. HWY-O-01-12

Scale: 1" = 20' Date: April 2012

SHEET No. EC-4 OF 50 SHEETS

"AS-BUILT"

FED. ROAD DIST. NO.	STATE	PROJ. NO.	FISCAL YEAR	SHEET NO.	TOTAL SHEETS
HAWAII	HAW.	HWY-O-01-12	2012	26	123

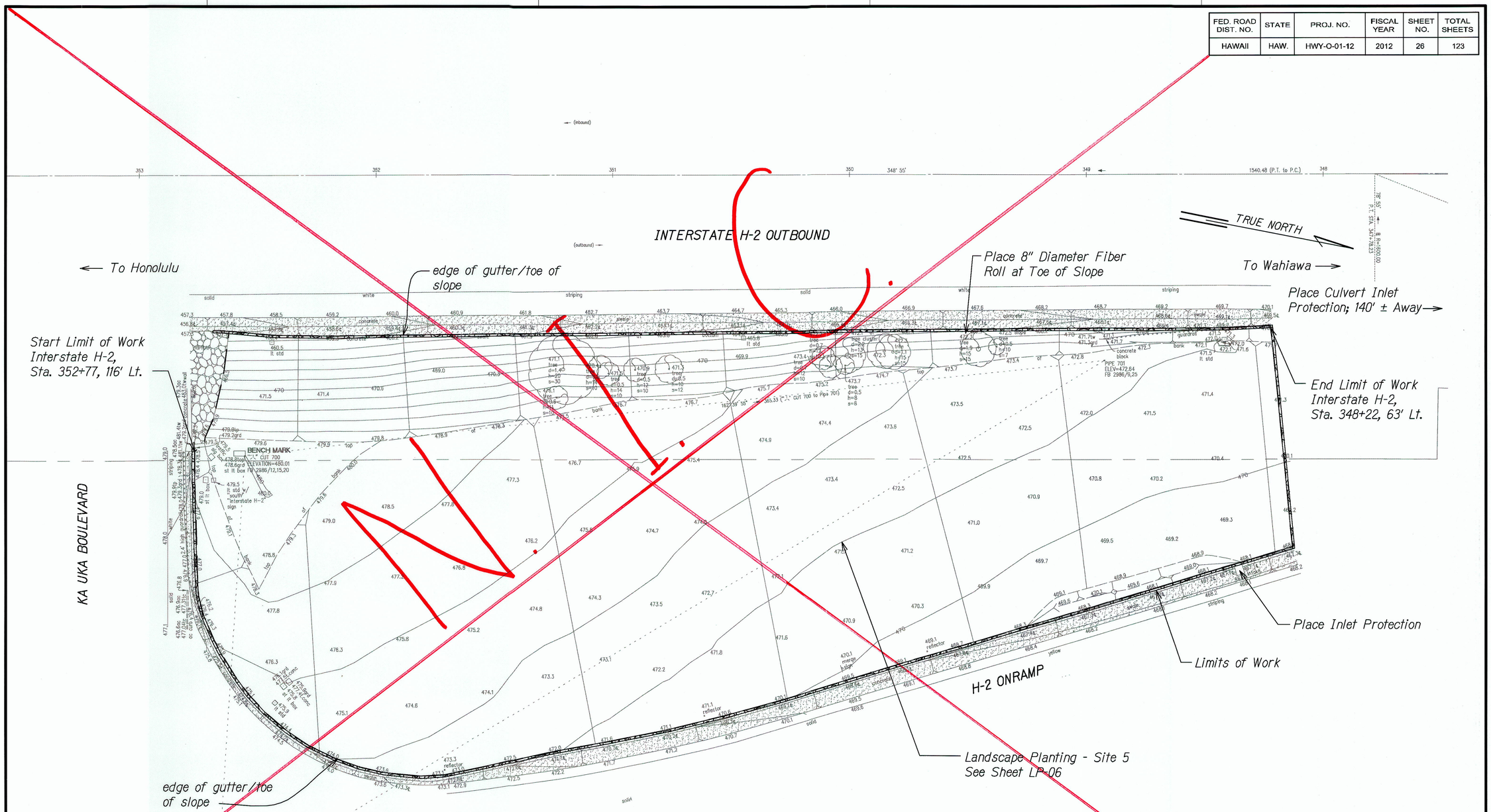

EROSION CONTROL PLAN SITE 5

Scale: 1" = 20'-0"

Estimated Area of Grassing Measured Along Slope Face: 68,000 SF

Notes:

1. Install erosion control matting on slopes greater than 3:1. See Sheet LP-06.
2. For erosion mat details, see Sheets EC-42 & 43.

ORIGINAL PLAN	SURVEY PLOTTED BY	DATE
	DRAWN BY	
NOTE BOOK	TRACED BY	
	DESIGNED BY	
	QUANTITIES BY	
N.	CHECKED BY	

EEP_SITE 5.DWG 1/27/2012 9:02:49 AM

JASON H. LAU
LICENSED PROFESSIONAL ENGINEER
NO. 9360-C
HAWAII USA
4/30/12
EXP. DATE
This work was prepared by me or under my supervision.

STATE OF HAWAII
DEPARTMENT OF TRANSPORTATION
HIGHWAYS DIVISION

EROSION CONTROL PLAN SITE 5

SLOPE IMPROVEMENTS FOR EROSION CONTROL AT VARIOUS SITES ON OAHU, PHASE 5

Project No. HWY-O-01-12

Scale: 1" = 20' Date: April 2012

SHEET No. EC-5 OF 50 SHEETS

"AS-BUILT"

FED. ROAD DIST. NO.	STATE	PROJ. NO.	FISCAL YEAR	SHEET NO.	TOTAL SHEETS
HAWAII	HAW.	HWY-O-01-12	2012	27	123

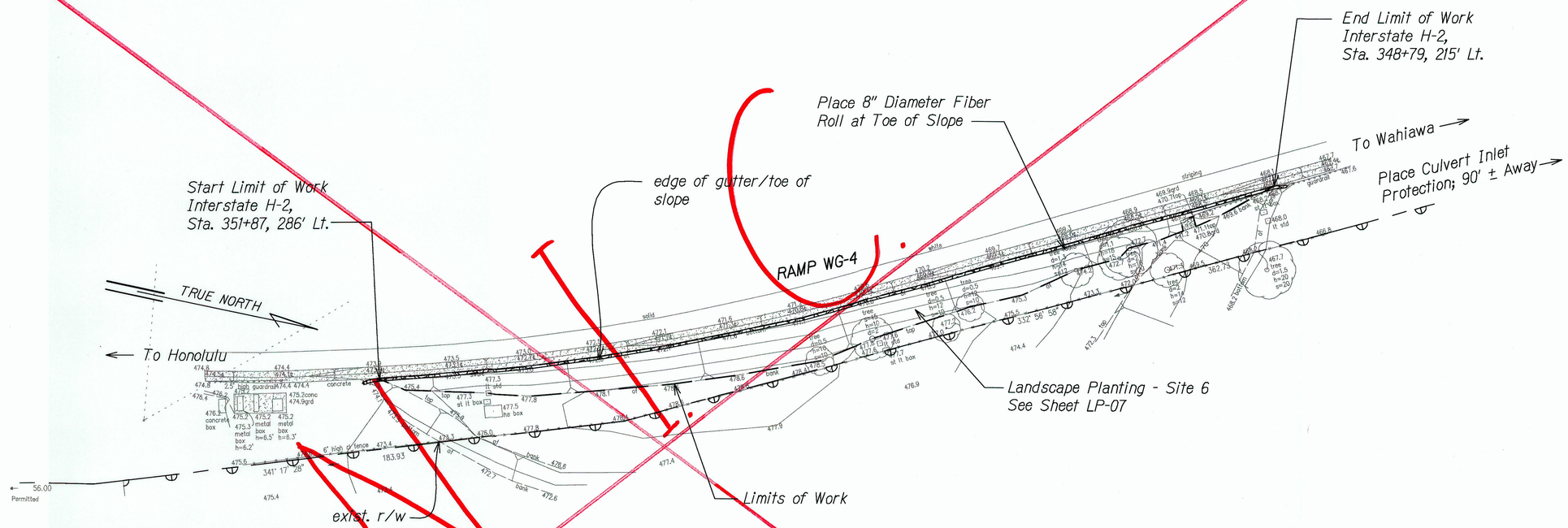

EROSION CONTROL PLAN SITE 6

Scale: 1" = 20'-0"

Estimated Area of Grassing Measured Along Slope Face: 3,300 SF

Notes:

1. Install erosion control matting on slopes greater than 3:1. See Sheet LP-07.
2. For erosion mat details, see Sheets EC-42 & 43.

ORIGINAL PLAN | SURVEY PLOTTED BY | DRAWN BY | TRACED BY | DESIGNED BY | QUANTITIES BY | CHECKED BY | DATE | NOTE BOOK No.

ECP-SITE 6.DWG 1/27/2012 9:02:30 AM

JASON H. LAU LICENSED PROFESSIONAL ENGINEER NO. 9360-C HAWAII USA

4/30/12
EXP. DATE

This work was prepared by me or under my supervision.

STATE OF HAWAII
DEPARTMENT OF TRANSPORTATION
HIGHWAYS DIVISION

EROSION CONTROL PLAN SITE 6

SLOPE IMPROVEMENTS FOR EROSION CONTROL AT VARIOUS SITES ON OAHU, PHASE 5
Project No. HWY-O-01-12

Scale: 1" = 20' Date: April 2012

SHEET No. EC-6 OF 50 SHEETS

"AS-BUILT"

FED. ROAD DIST. NO.	STATE	PROJ. NO.	FISCAL YEAR	SHEET NO.	TOTAL SHEETS
HAWAII	HAW.	HWY-O-01-12	2012	28	123

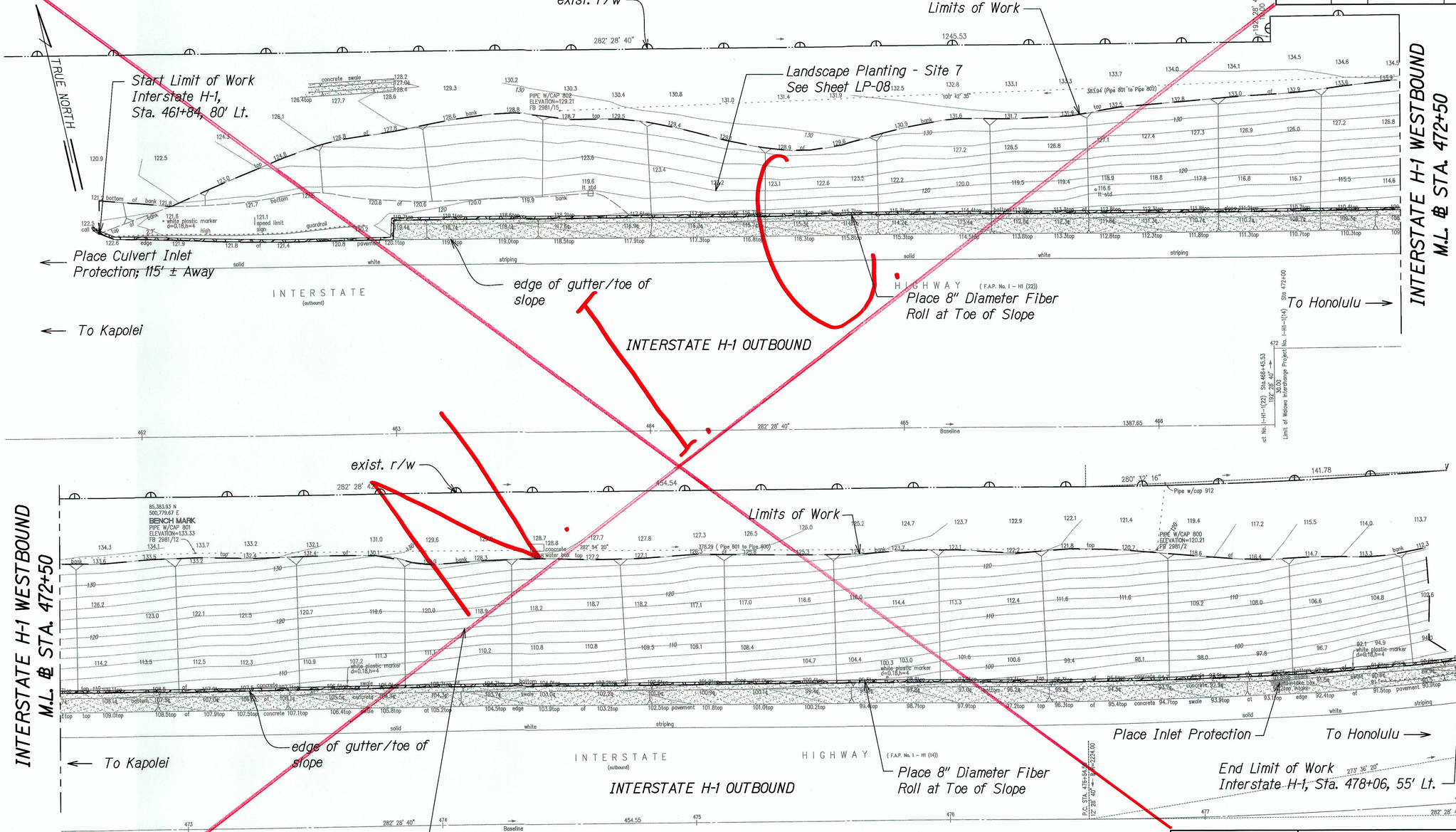

Notes:

1. Install erosion control matting on slopes greater than 3:1. See Sheet LP-08.
2. For erosion mat details, see Sheets EC-42 & 43.

EROSION CONTROL PLAN SITE 7

Scale: 1" = 20'-0"

Estimated Area of Grassing Measured Along Slope Face: 45,000 SF

ORIGINAL PLAN	SURVEY PLOTTED BY	DATE
	HIGHWAY PLOTTED BY	
NOTE BOOK	TRACED BY	
	DESIGNED BY	
No.	QUANTITIES BY	
	CHECKED BY	

ECP-7.DWG 3/29/2012 10:32:04 PM

JASON H. LAU
LICENSED PROFESSIONAL ENGINEER
NO. 9360-C
HAWAII USA
4/30/12
EXP. DATE
This work was prepared by me or under my supervision.

STATE OF HAWAII
DEPARTMENT OF TRANSPORTATION
HIGHWAYS DIVISION

EROSION CONTROL PLAN SITE 7

SLOPE IMPROVEMENTS FOR EROSION CONTROL AT VARIOUS SITES ON OAHU, PHASE 5
Project No. HWY-O-01-12

Scale: 1" = 20' Date: April 2012

SHEET No. EC-7 OF 50 SHEETS

'AS-BUILT"

FED. ROAD DIST. NO.	STATE	PROJ. NO.	FISCAL YEAR	SHEET NO.	TOTAL SHEETS
HAWAII	HAW.	HWY-O-01-12	2012	29	123

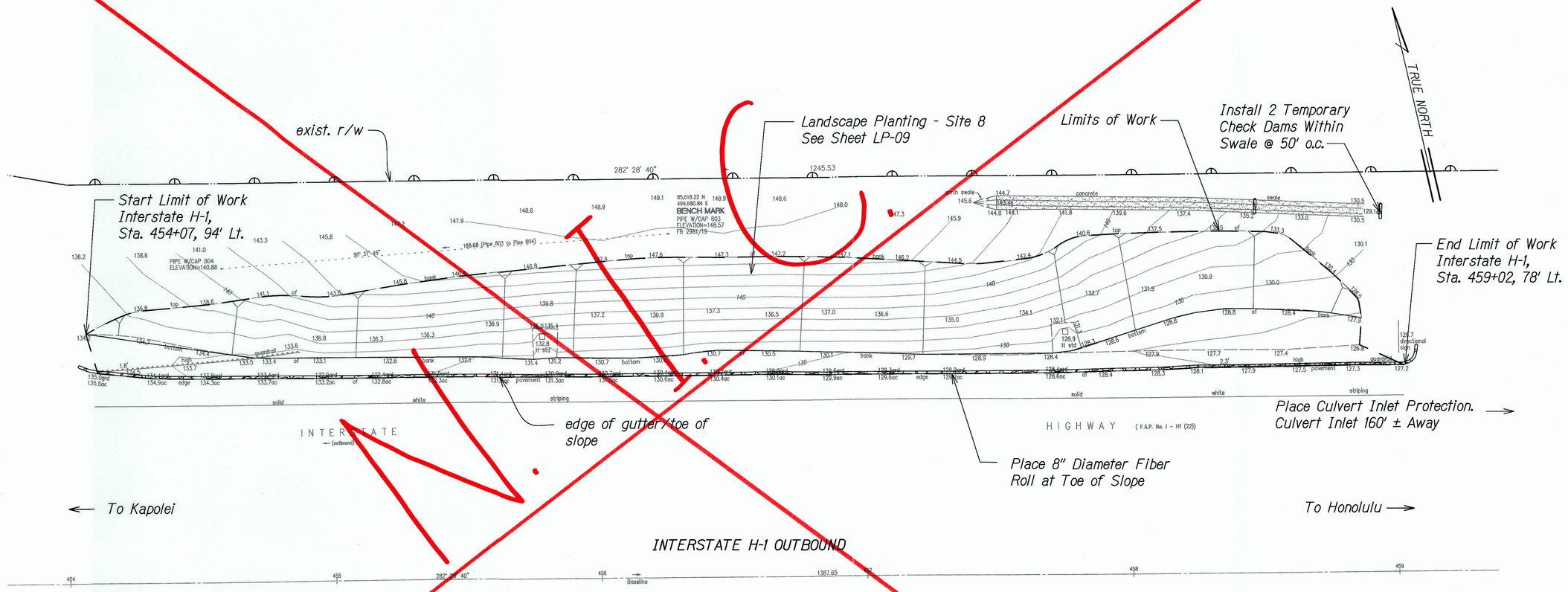

EROSION CONTROL PLAN SITE 8

Scale: 1" = 20'-0"

Estimated Area of Grassing Measured Along Slope Face: 19,000 SF

Notes:

1. Install erosion control matting on slopes greater than 3:1. See Sheet LP-09.
2. For erosion mat details, see Sheets EC-42 & 43.

ORIGINAL PLAN	SURVEY PLOTTED BY	DATE
	DRAWN BY	
	TRACED BY	
NOTE BOOK	DESIGNED BY	
	QUANTITIES BY	
	CHECKED BY	
No.		

ECP_SITE 8.DWG 3/29/2012 12:33:35 PM

JASON H. LAU
LICENSED PROFESSIONAL ENGINEER
NO. 9360-C
HAWAII USA

4/30/12
EXP. DATE

This work was prepared by me or under my supervision.

STATE OF HAWAII
DEPARTMENT OF TRANSPORTATION
HIGHWAYS DIVISION

EROSION CONTROL PLAN SITE 8

SLOPE IMPROVEMENTS FOR EROSION CONTROL AT VARIOUS SITES ON OAHU, PHASE 5

Project No. HWY-O-01-12

Scale: 1" = 20' Date: April 2012

SHEET No. EC-8 OF 50 SHEETS

"AS-BUILT"

FED. ROAD DIST. NO.	STATE	PROJ. NO.	FISCAL YEAR	SHEET NO.	TOTAL SHEETS
HAWAII	HAW.	HWY-O-01-12	2012	30	123

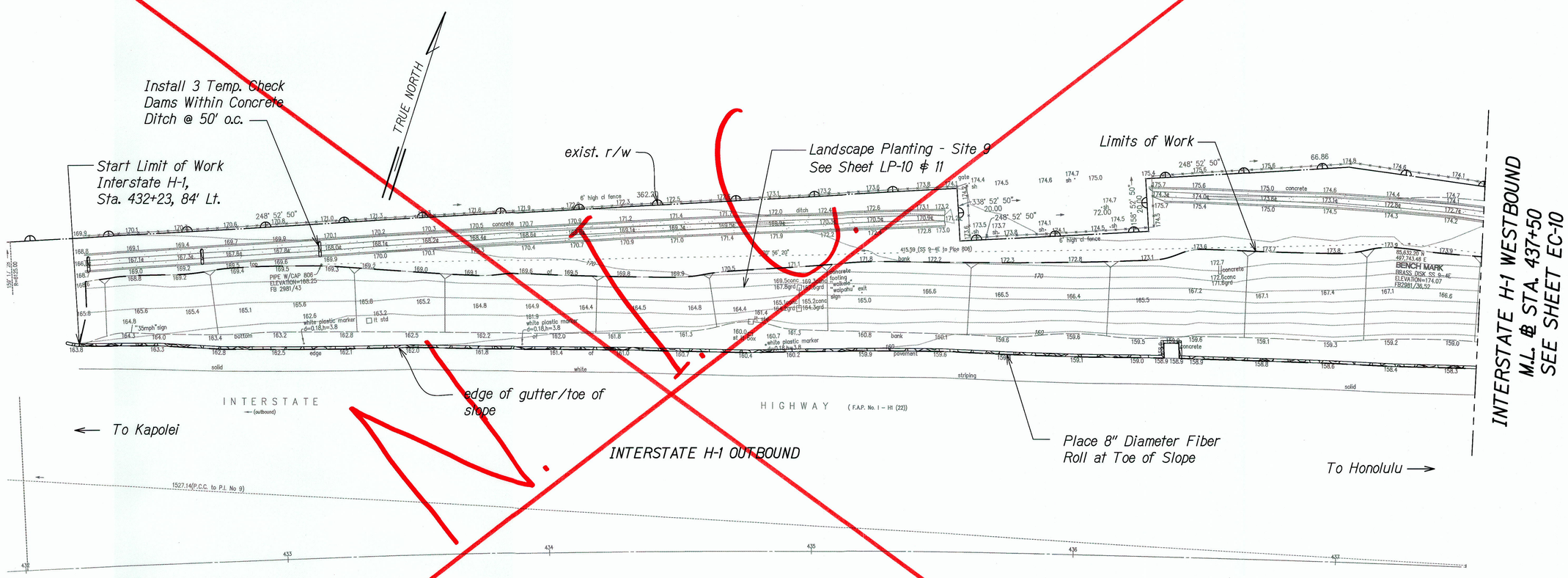

EROSION CONTROL PLAN SITE 9

Scale: 1" = 20'-0"

Estimated Area of Grassing Measured Along Slope Face: 46,000 SF

Notes:

1. Install erosion control matting on slopes greater than 3:1. See Sheet LP-10 & 11.
2. For erosion mat details, see Sheets EC-42 & 43.

JASON H. LAU LICENSED PROFESSIONAL ENGINEER NO. 9360-C HAWAII USA

4/30/12
EXP. DATE

This work was prepared by me or under my supervision.

STATE OF HAWAII
DEPARTMENT OF TRANSPORTATION
HIGHWAYS DIVISION

EROSION CONTROL PLAN SITE 9

SLOPE IMPROVEMENTS FOR EROSION CONTROL AT VARIOUS SITES ON OAHU, PHASE 5
Project No. HWY-O-01-12

Scale: 1" = 20' Date: April 2012

SHEET No. EC-9 OF 50 SHEETS

ORIGINAL PLAN | SURVEY PLOTTED BY | DRAWN BY | TRACED BY | DESIGNED BY | QUANTITIES BY | CHECKED BY | DATE | NOTE BOOK No.

ECP_SITE 9.DWG 3/27/2012 10:33:35 AM

"AS-BUILT"

FED. ROAD DIST. NO.	STATE	PROJ. NO.	FISCAL YEAR	SHEET NO.	TOTAL SHEETS
HAWAII	HAW.	HWY-O-01-12	2012	31	123

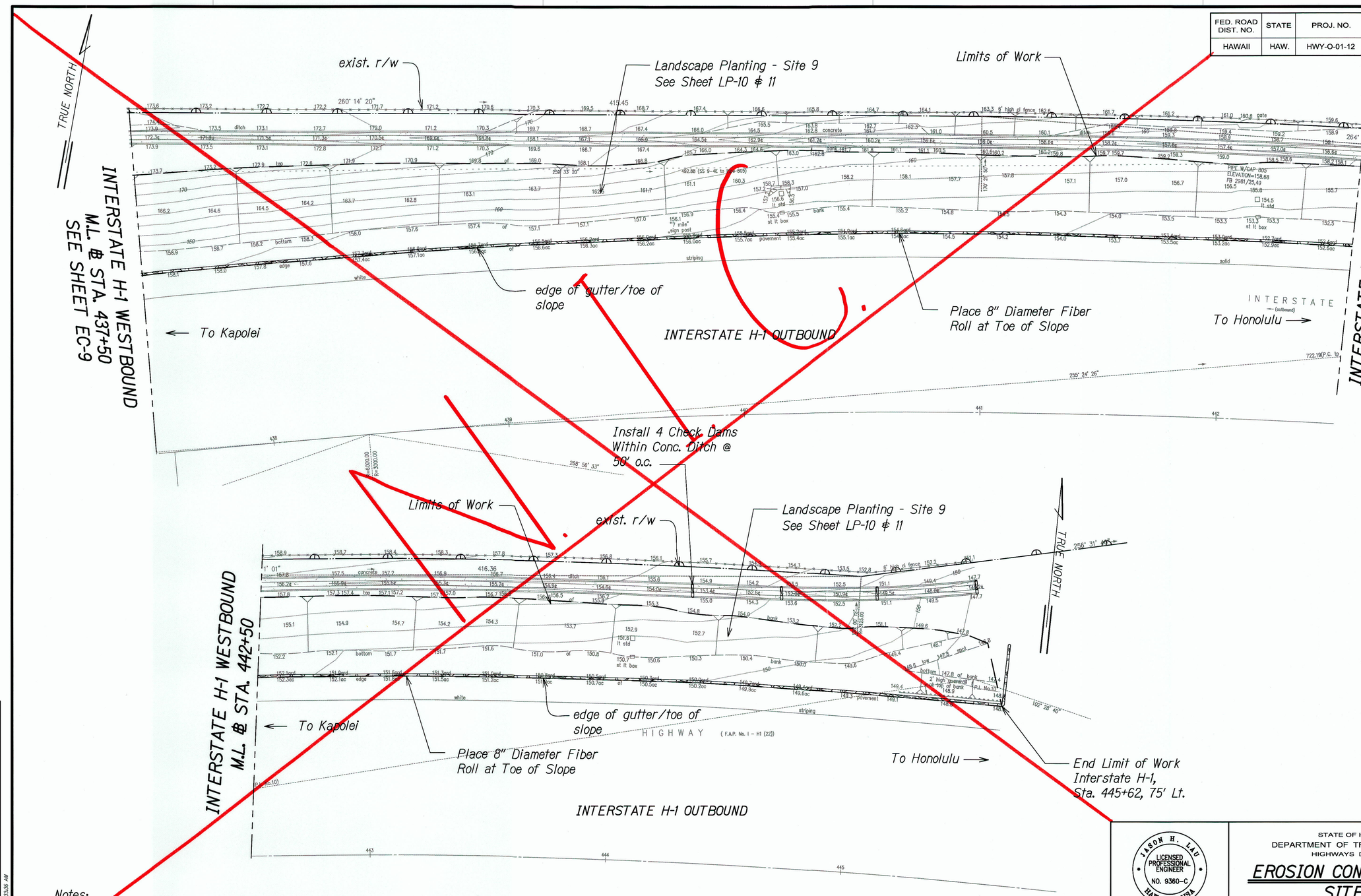

Notes:

1. Install erosion control matting on slopes greater than 3:1. See Sheet LP-10 & 11.
2. For erosion mat details, see Sheets EC-42 & 43.

EROSION CONTROL PLAN SITE 9

Scale: 1" = 20'-0"

Estimated Area of Grassing Measured Along Slope Face: 46,000 SF

ORIGINAL PLANS	SURVEY PLOTTED BY	DATE
	DRAWN BY	
	TRACED BY	
NOTE BOOK	DESIGNED BY	
	QUANTITIES BY	
No.	CHECKED BY	

EC9_SITE 9.DWG 9/27/2012 11:33:35 AM

JASON H. LAU
LICENSED PROFESSIONAL ENGINEER
NO. 9360-C
HAWAII USA
4/30/12
EXP. DATE
This work was prepared by me or under my supervision.

STATE OF HAWAII
DEPARTMENT OF TRANSPORTATION
HIGHWAYS DIVISION

EROSION CONTROL PLAN SITE 9

SLOPE IMPROVEMENTS FOR EROSION CONTROL AT VARIOUS SITES ON OAHU, PHASE 5
Project No. HWY-O-01-12

Scale: 1" = 20' Date: April 2012

SHEET No. EC-10 OF 50 SHEETS

"AS-BUILT"

FED. ROAD DIST. NO.	STATE	PROJ. NO.	FISCAL YEAR	SHEET NO.	TOTAL SHEETS
HAWAII	HAW.	HWY-O-01-12	2012	32	123

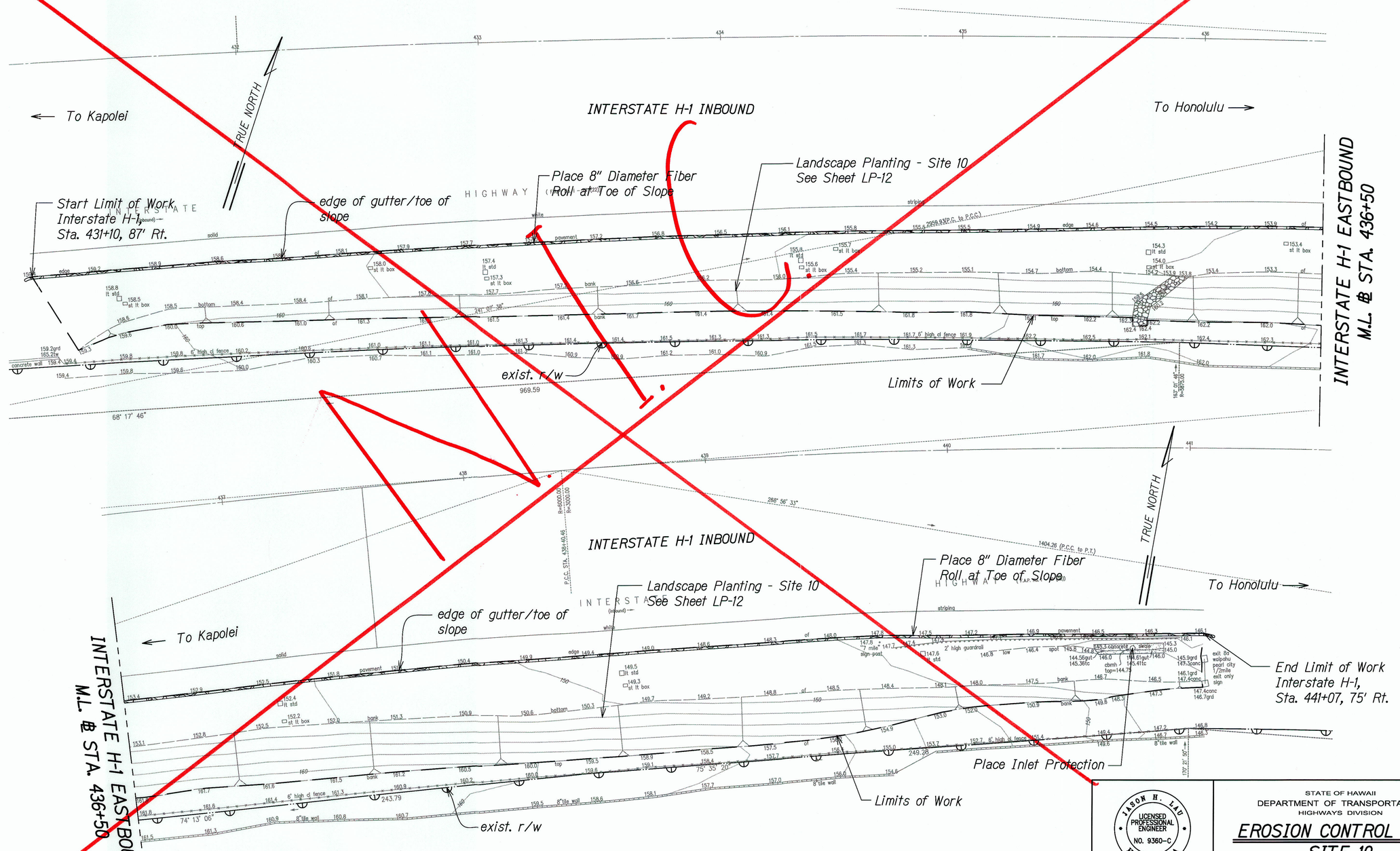

Notes:

1. Install erosion control matting on slopes greater than 3:1. See Sheet LP-12.
2. For erosion mat details, see Sheets EC-42 & 43.

EROSION CONTROL PLAN SITE 10

Scale: 1" = 20'-0"

Estimated Area of Grassing Measured Along Slope Face: 33,000 SF

ORIGINAL PLAN	SURVEY PLOTTED BY	DATE
	DRAWN BY	
NOTE BOOK	TRACED BY	
	DESIGNED BY	
	QUANTITIES BY	
No.	CHECKED BY	

EC9_SITE 10.DWG 3/29/2012 12:44:33 PM

JASON H. LAU
LICENSED PROFESSIONAL ENGINEER
NO. 9360-C
HAWAII USA
4/30/12
EXP. DATE
This work was prepared by me or under my supervision.

STATE OF HAWAII
DEPARTMENT OF TRANSPORTATION
HIGHWAYS DIVISION

EROSION CONTROL PLAN SITE 10

SLOPE IMPROVEMENTS FOR EROSION CONTROL AT VARIOUS SITES ON OAHU, PHASE 5
Project No. HWY-O-01-12

Scale: 1" = 20' Date: April 2012

SHEET No. EC-11 OF 50 SHEETS

"AS-BUILT"

FED. ROAD DIST. NO.	STATE	PROJ. NO.	FISCAL YEAR	SHEET NO.	TOTAL SHEETS
HAWAII	HAW.	HWY-O-01-12	2012	33	123

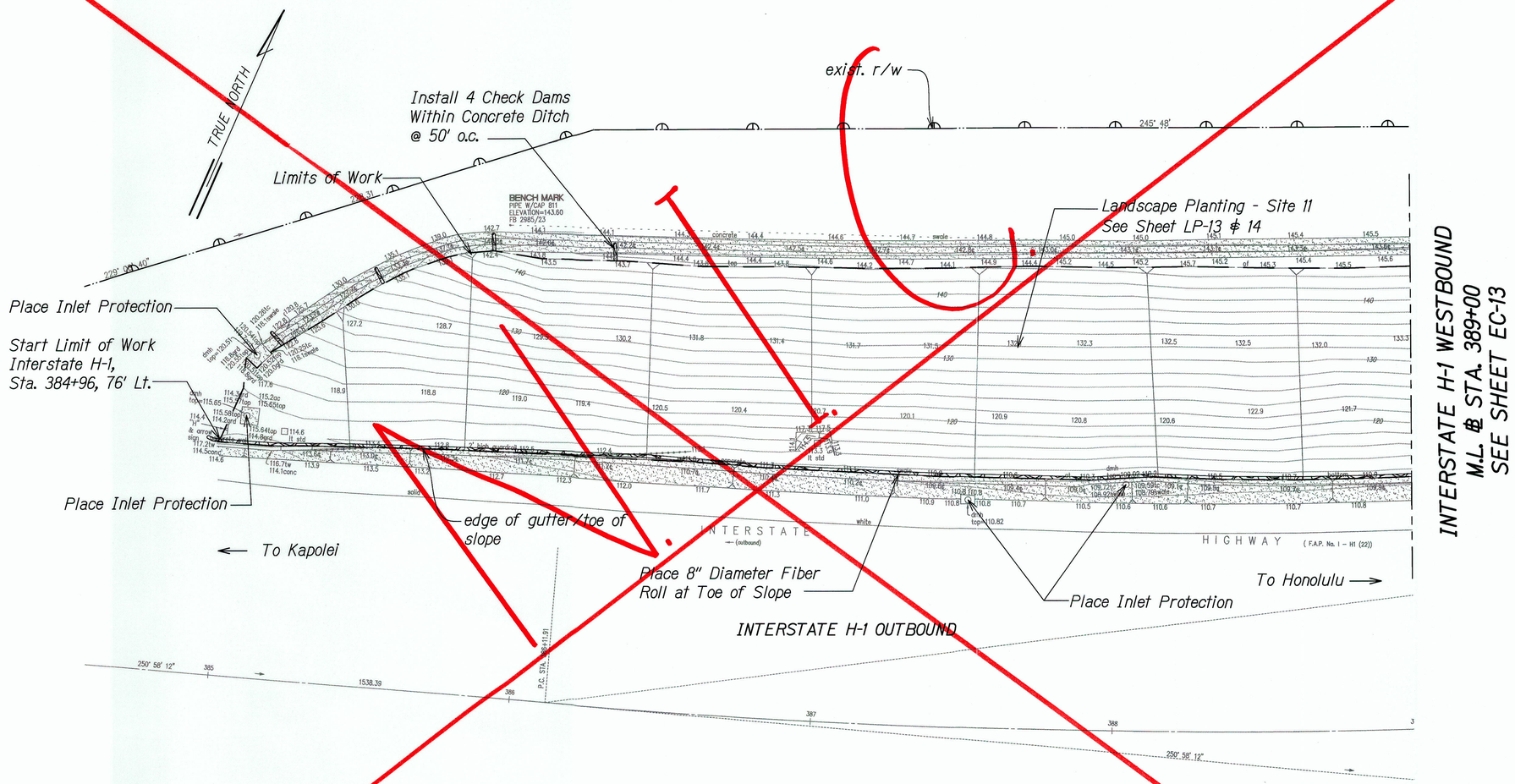

EROSION CONTROL PLAN SITE 11

Scale: 1" = 20'-0"

Notes:

1. Install erosion control matting on slopes greater than 3:1. See Sheet LP-12 & 13.
2. For erosion mat details, see Sheets EC-42 & 43.

Estimated Area of Grassing Measured Along Slope Face: 80,710 SF

ORIGINAL PLAN | SURVEY PLOTTED BY | DATE | PLANS BY | TRACED BY | DESIGNED BY | QUANTITIES BY | CHECKED BY | NOTE BOOK No.

ECP_11.DWG 3/21/2012 12:25:04 PM

JASON H. LAU
LICENSED PROFESSIONAL ENGINEER
NO. 9360-C
HAWAII USA
4/30/12
EXP. DATE
This work was prepared by me or under my supervision.

STATE OF HAWAII
DEPARTMENT OF TRANSPORTATION
HIGHWAYS DIVISION

EROSION CONTROL PLAN SITE 11

SLOPE IMPROVEMENTS FOR EROSION CONTROL AT VARIOUS SITES ON OAHU, PHASE 5
Project No. HWY-O-01-12

Scale: 1" = 20' Date: April 2012

SHEET No. EC-12 OF 50 SHEETS

"AS-BUILT"

FED. ROAD DIST. NO.	STATE	PROJ. NO.	FISCAL YEAR	SHEET NO.	TOTAL SHEETS
HAWAII	HAW.	HWY-O-01-12	2012	34	123

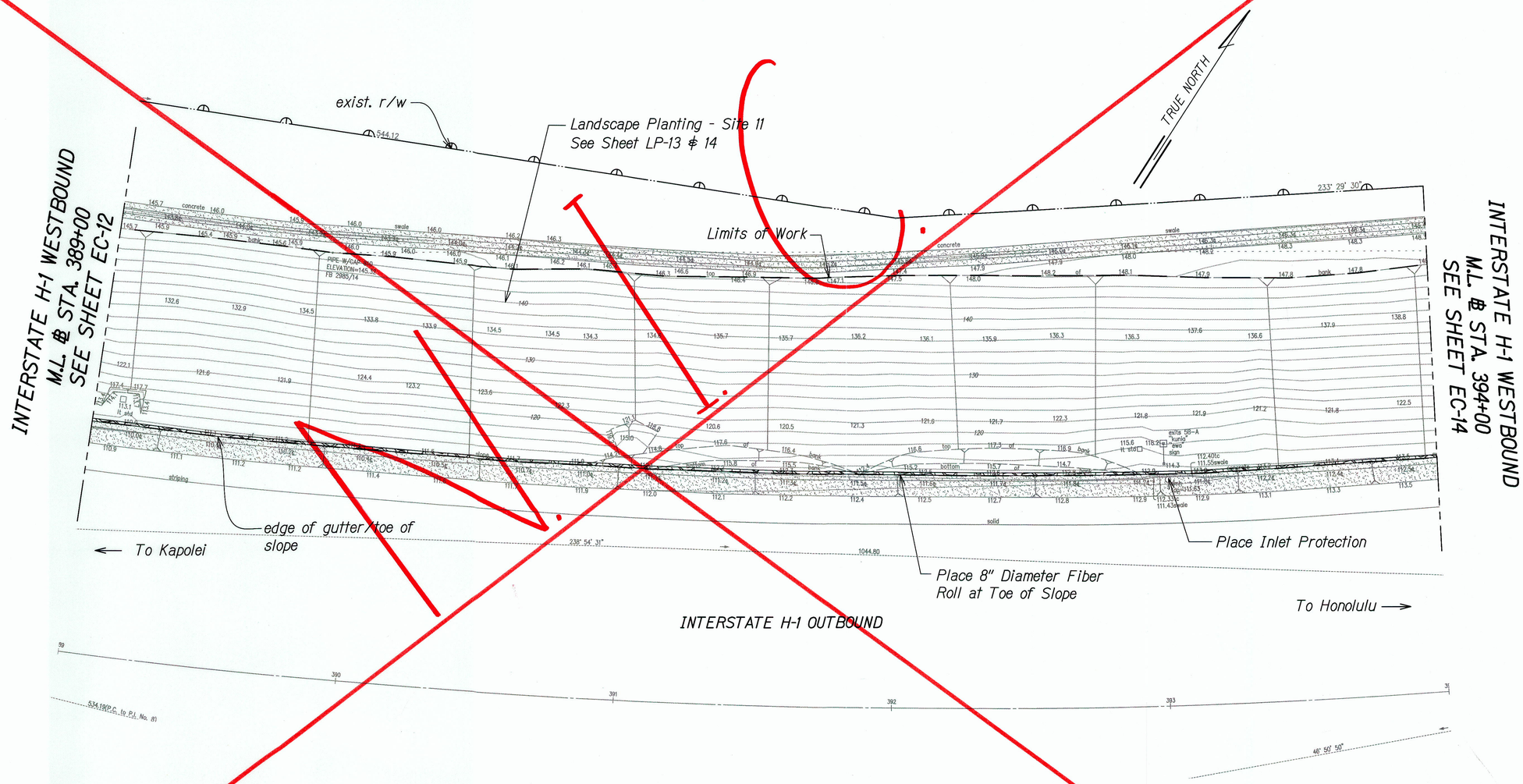

EROSION CONTROL PLAN SITE 11

Scale: 1" = 20'-0"

Estimated Area of Grassing Measured Along Slope Face: 80,710 SF

Notes:

1. Install erosion control matting on slopes greater than 3:1. See Sheet LP-13 & 14.
2. For erosion mat details, see Sheets EC-42 & 43.

ORIGINAL PLAN	SURVEY PLOTTED BY	DATE
	SURVEY BY	
	TRACED BY	
NOTE BOOK	DESIGNED BY	
	QUANTITIES BY	
No.	CHECKED BY	

ECP-1LDWG 3/27/2012 12:36:44 PM

JASON H. LAU
LICENSED PROFESSIONAL ENGINEER
NO. 9360-C
HAWAII USA

4/30/12
REV. DATE

This work was prepared by me or under my supervision.

STATE OF HAWAII
DEPARTMENT OF TRANSPORTATION
HIGHWAYS DIVISION

EROSION CONTROL PLAN SITE 11

SLOPE IMPROVEMENTS FOR EROSION CONTROL AT VARIOUS SITES ON OAHU, PHASE 5
Project No. HWY-O-01-12

Scale: 1" = 20' Date: April 2012

SHEET No. EC-13 OF 50 SHEETS

"AS-BUILT"

FED. ROAD DIST. NO.	STATE	PROJ. NO.	FISCAL YEAR	SHEET NO.	TOTAL SHEETS
HAWAII	HAW.	HWY-O-01-12	2012	35	123

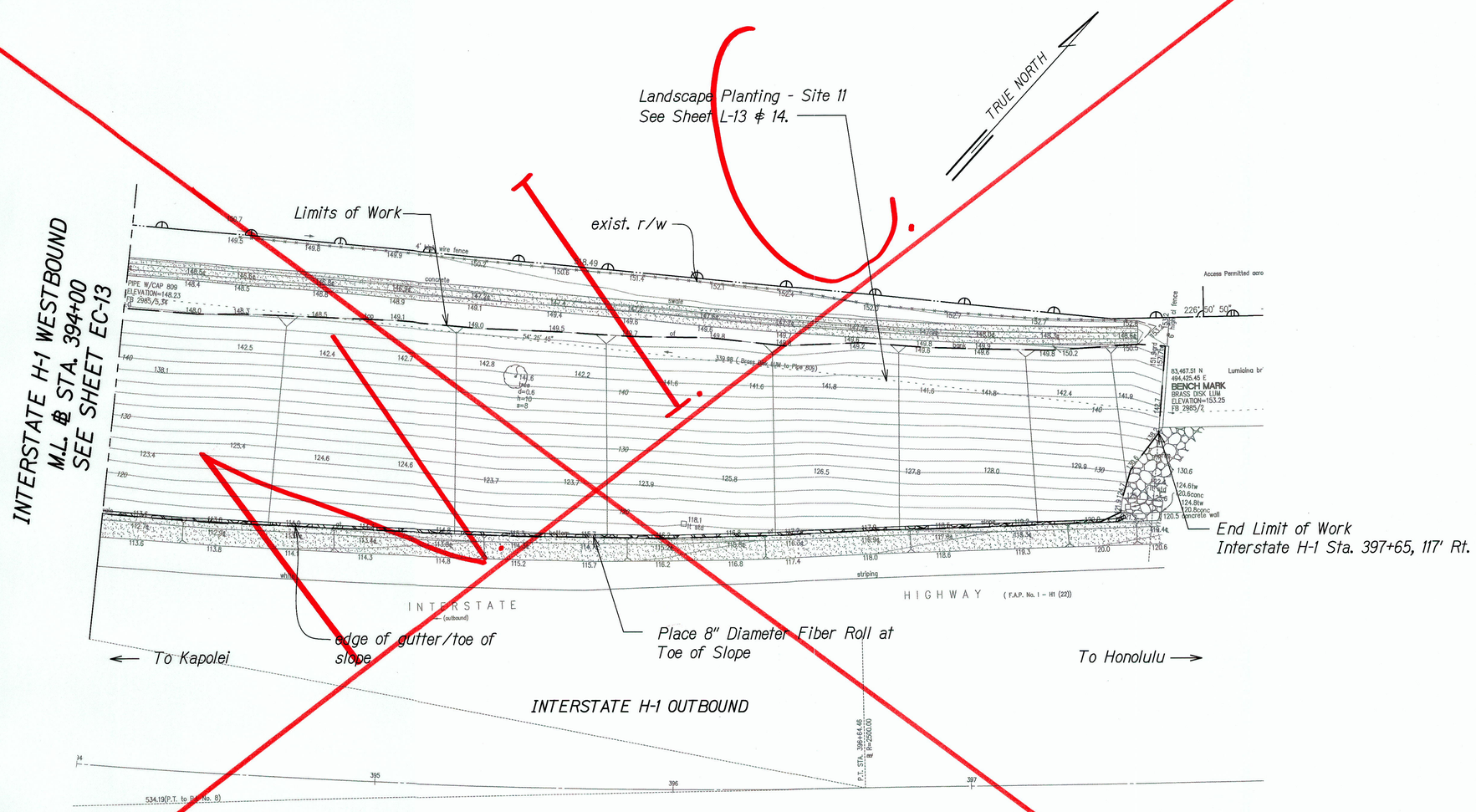

EROSION CONTROL PLAN SITE 11

Scale: 1" = 20'-0"

Notes:

1. Install erosion control matting on slopes greater than 3:1. See Sheet LP-13 & 14.
2. For erosion mat details, see Sheets EC-42 & 43.

Estimated Area of Grassing Measured Along Slope Face: 80,710 SF

ORIGINAL PLAN	SURVEY PLOTTED BY	DATE
	DRAWN BY	
	TRACED BY	
NOTE BOOK	DESIGNED BY	
	QUANTITIES BY	
No.	CHECKED BY	

ECP_HJONG 3/27/2012 12:26:44 PM

JASON H. LAU
LICENSED PROFESSIONAL ENGINEER
NO. 9360-C
HAWAII USA

4/30/12
EXP. DATE

This work was prepared by me or under my supervision.

STATE OF HAWAII
DEPARTMENT OF TRANSPORTATION
HIGHWAYS DIVISION

EROSION CONTROL PLAN
SITE 11

SLOPE IMPROVEMENTS FOR EROSION CONTROL AT VARIOUS SITES ON OAHU, PHASE 5
Project No. HWY-O-01-12

Scale: 1" = 20' Date: April 2012

SHEET No. EC-14 OF 50 SHEETS

"AS-BUILT"

FED. ROAD DIST. NO.	STATE	PROJ. NO.	FISCAL YEAR	SHEET NO.	TOTAL SHEETS
HAWAII	HAW.	HWY-O-01-12	2012	36	123

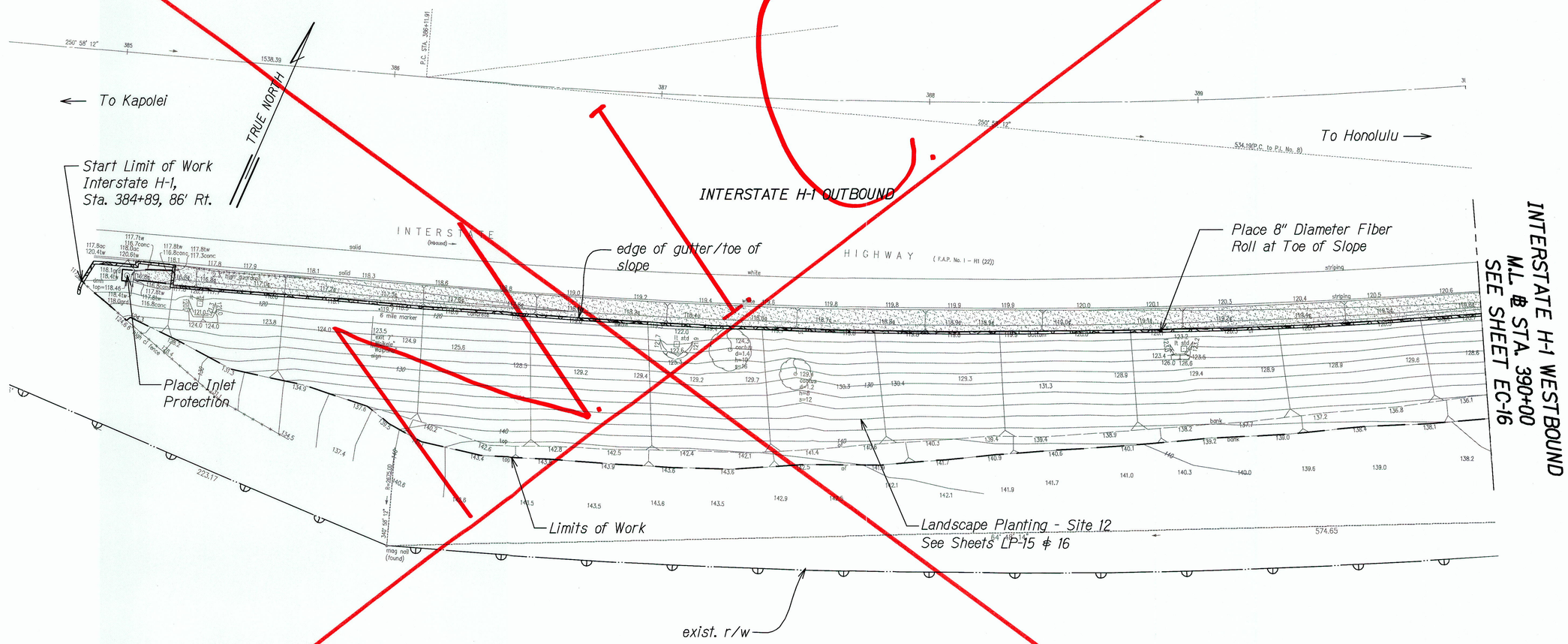

EROSION CONTROL PLAN SITE 12

Scale: 1" = 20'-0"

Estimated Area of Grassing Measured Along Slope Face: 45,600 SF

Notes:

1. Install erosion control matting on slopes greater than 3:1. See Sheet LP-15 & 16.
2. For erosion mat details, see Sheets EC-42 & 43.

ORIGINAL PLAN	SURVEY PLOTTED BY	DATE
	SURVEY BY	
	DRAWN BY	
NOTE BOOK	TRACED BY	
	DESIGNED BY	
	QUANTITIES BY	
	CHECKED BY	

ECP_12.DWG 1/27/2012 9:09:54 AM

JASON H. LAU
LICENSED PROFESSIONAL ENGINEER
NO. 9360-C
HAWAII USA
4/30/12
EXP. DATE
This work was prepared by me or under my supervision.

STATE OF HAWAII
DEPARTMENT OF TRANSPORTATION
HIGHWAYS DIVISION

EROSION CONTROL PLAN SITE 12

SLOPE IMPROVEMENTS FOR EROSION CONTROL AT VARIOUS SITES ON OAHU, PHASE 5
Project No. HWY-O-01-12

Scale: 1" = 20' Date: April 2012

SHEET No. EC-15 OF 50 SHEETS

"AS-BUILT"

FED. ROAD DIST. NO.	STATE	PROJ. NO.	FISCAL YEAR	SHEET NO.	TOTAL SHEETS
HAWAII	HAW.	HWY-O-01-12	2012	37	123

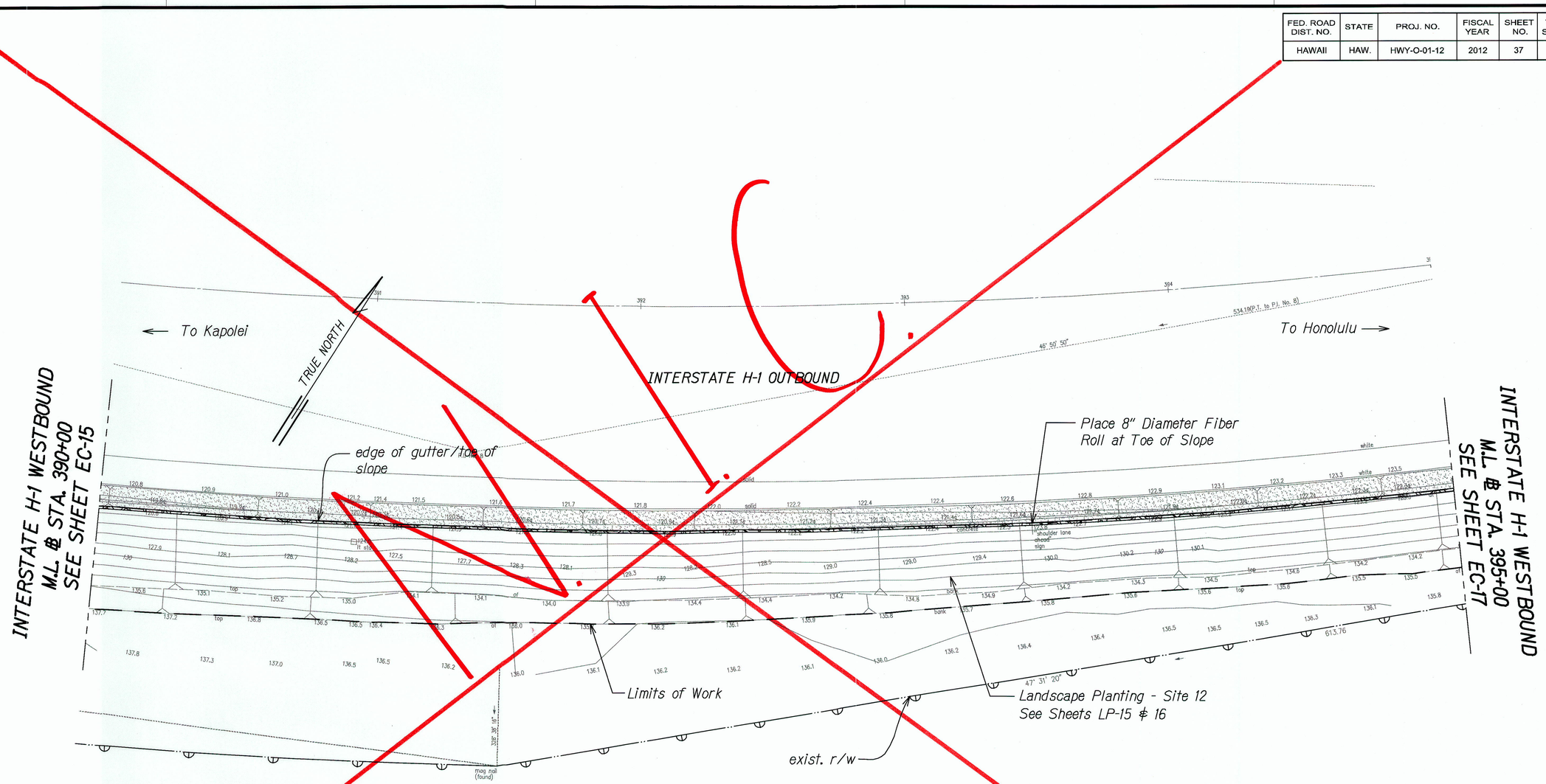

EROSION CONTROL PLAN SITE 12

Scale: 1" = 20'-0"

Estimated Area of Grassing Measured Along Slope Face: 45,600 SF

Notes:

1. Install erosion control matting on slopes greater than 3:1. See Sheet LP-15 & 16.
2. For erosion mat details, see Sheets EC-42 & 43.

ORIGINAL PLAN
NOTE BOOK
SURVEY PLOTTED BY ____ DATE ____
DRAWN BY ____
TRACED BY ____
DESIGNED BY ____
QUANTITIES BY ____
CHECKED BY ____

EC-12.DWG 1/27/2012 9:08:54 AM

JASON H. LAU
LICENSED PROFESSIONAL ENGINEER
NO. 9360-C
HAWAII USA
4/30/12
EXP. DATE
This work was prepared by me or under my supervision.

STATE OF HAWAII
DEPARTMENT OF TRANSPORTATION
HIGHWAYS DIVISION

EROSION CONTROL PLAN SITE 12

SLOPE IMPROVEMENTS FOR EROSION CONTROL AT VARIOUS SITES ON OAHU, PHASE 5
Project No. HWY-O-01-12

Scale: 1" = 20' Date: April 2012

SHEET No. EC-16 OF 50 SHEETS

"AS-BUILT"

FED. ROAD DIST. NO.	STATE	PROJ. NO.	FISCAL YEAR	SHEET NO.	TOTAL SHEETS
HAWAII	HAW.	HWY-O-01-12	2012	38	123

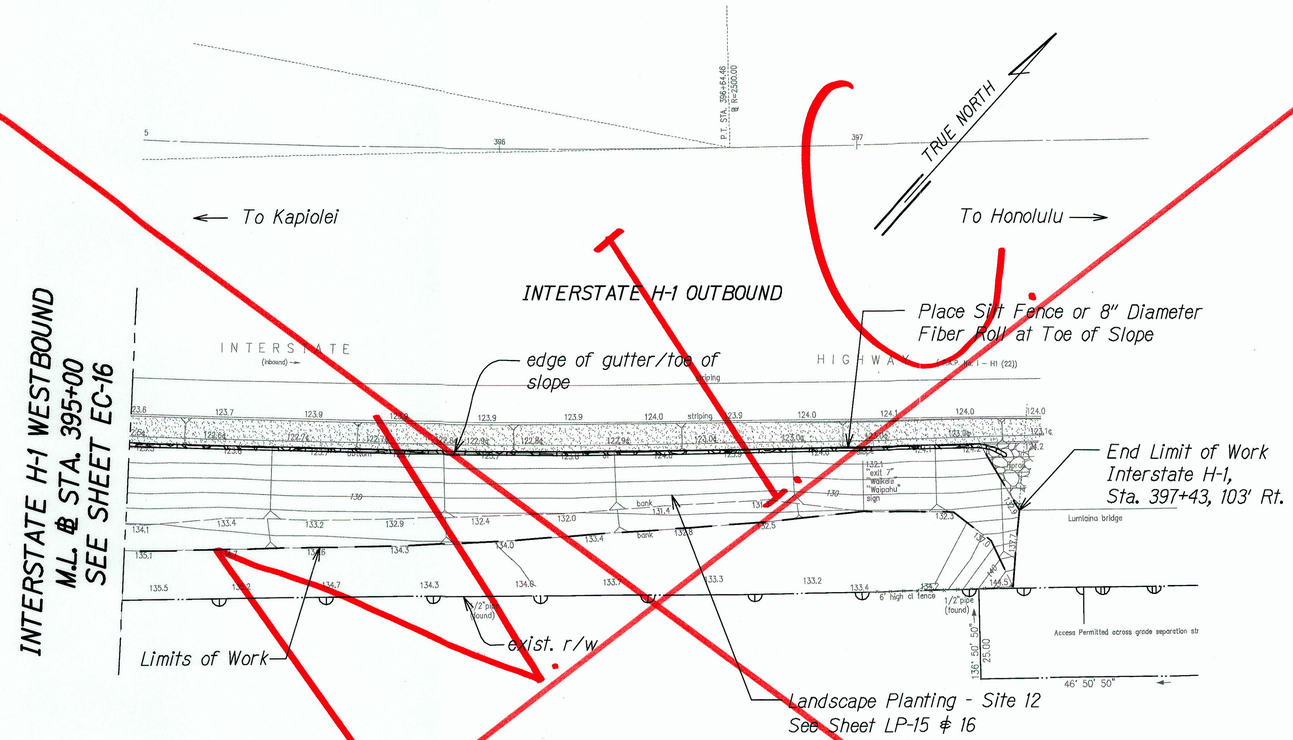

EROSION CONTROL PLAN SITE 12

Scale: 1" = 20'-0"

Estimated Area of Grassing Measured Along Slope Face: 45,600 SF

Notes:

1. Install erosion control matting on slopes greater than 3:1. See Sheet LP-15 & 16.
2. For erosion mat details, see Sheets EC-42 & 43.

JASON H. LAU
LICENSED PROFESSIONAL ENGINEER
NO. 9360-C
HAWAII USA
4/30/12
EXP. DATE
This work was prepared by me or under my supervision.

STATE OF HAWAII
DEPARTMENT OF TRANSPORTATION
HIGHWAYS DIVISION

EROSION CONTROL PLAN
SITE 12

SLOPE IMPROVEMENTS FOR EROSION CONTROL AT VARIOUS SITES ON OAHU, PHASE 5
Project No. HWY-O-01-12

Scale: 1" = 20' Date: April 2012

SHEET No. EC-17 OF 50 SHEETS

ORIGINAL PLAN | SURVEY NOTE BOOK | PLOTTED BY | DRAWN BY | TRACED BY | DESIGNED BY | QUANTITIES BY | CHECKED BY | DATE

EC0-12.DWG 1/27/2012 9:08:04 AM

"AS-BUILT"

FED. ROAD DIST. NO.	STATE	PROJ. NO.	FISCAL YEAR	SHEET NO.	TOTAL SHEETS
HAWAII	HAW.	HWY-O-01-12	2012	39	123

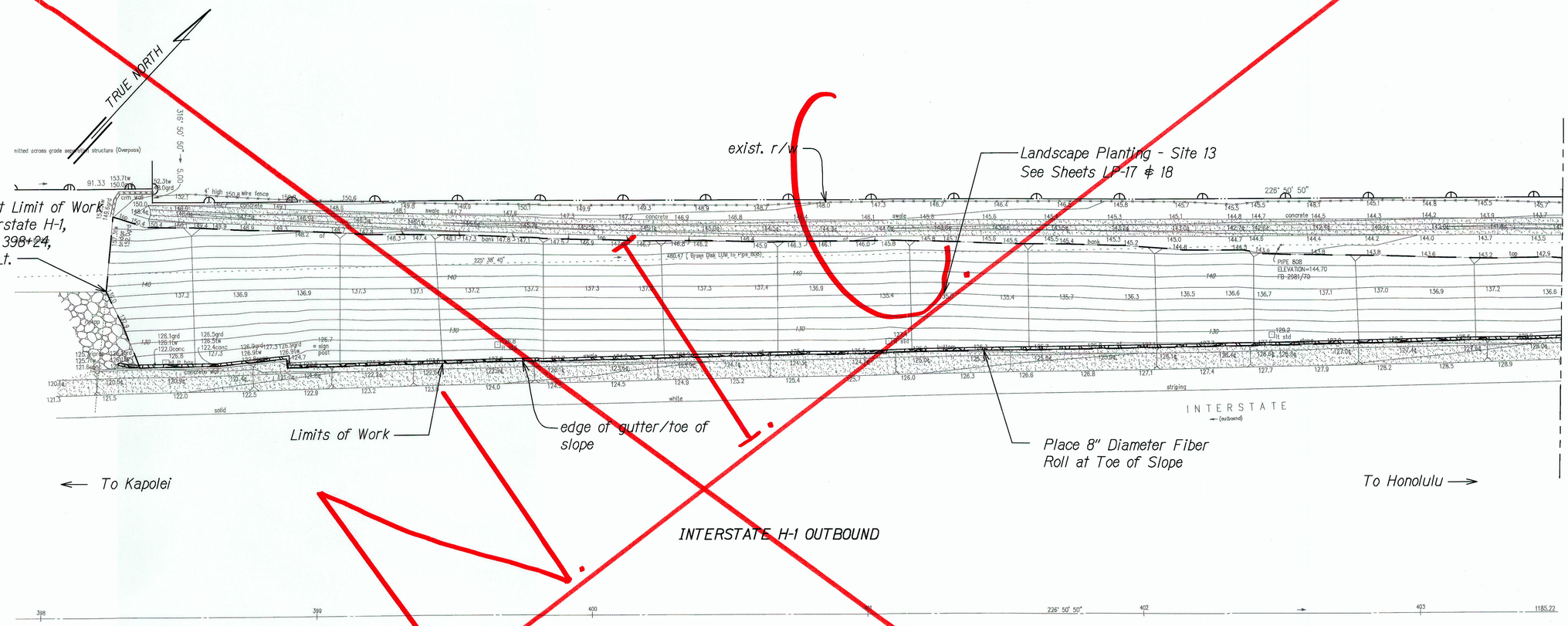

EROSION CONTROL PLAN SITE 13

Scale: 1" = 20'-0"

Estimated Area of Grassing Measured Along Slope Face: 31,500 SF

Notes:

1. Install erosion control matting on slopes greater than 3:1. See Sheet LP-17 & 18.
2. For erosion mat details, see Sheets EC-42 & 43.

JASON H. LAU
LICENSED PROFESSIONAL ENGINEER
NO. 9360-C
HAWAII USA
4/30/12
EXP. DATE
This work was prepared by me or under my supervision.

STATE OF HAWAII
DEPARTMENT OF TRANSPORTATION
HIGHWAYS DIVISION

EROSION CONTROL PLAN
SITE 13

SLOPE IMPROVEMENTS FOR EROSION CONTROL AT VARIOUS SITES ON OAHU, PHASE 5
Project No. HWY-O-01-12

Scale: 1" = 20' Date: April 2012

SHEET No. EC-18 OF 50 SHEETS

ORIGINAL PLANS | SURVEY PLOTTED BY | DRAWN BY | TRACED BY | DESIGNED BY | QUANTITIES BY | CHECKED BY | DATE | NOTE BOOK | No.

ECP_TLDWG 2/1/2012 1:52:28 PM

"AS-BUILT"

FED. ROAD DIST. NO.	STATE	PROJ. NO.	FISCAL YEAR	SHEET NO.	TOTAL SHEETS
HAWAII	HAW.	HWY-O-01-12	2012	40	123

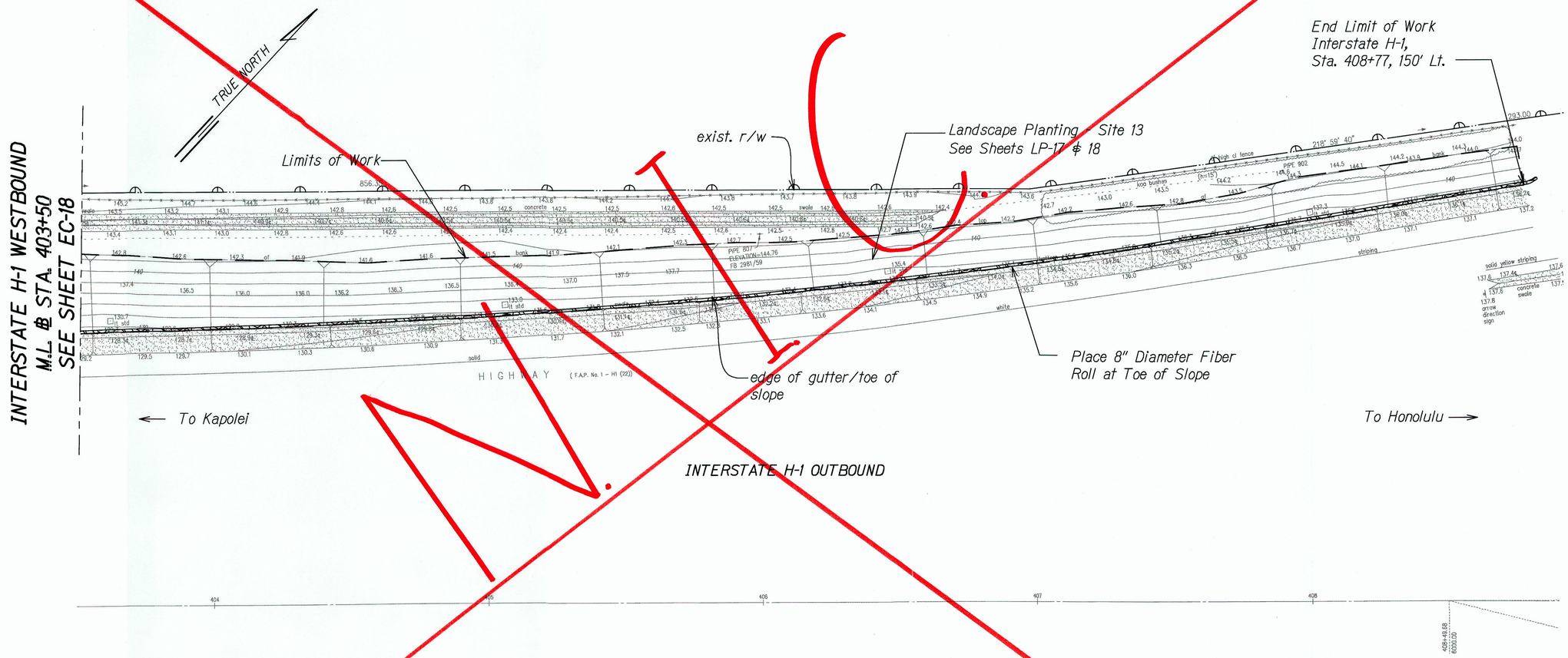

EROSION CONTROL PLAN SITE 13

Scale: 1" = 20'-0"

Estimated Area of Grassing Measured Along Slope Face: 31,500 SF

Notes:

1. Install erosion control matting on slopes greater than 3:1. See Sheet LP-17 & 18.
2. For erosion mat details, see Sheets EC-42 & 43.

ORIGINAL PLAN	SURVEY PLOTTED BY	DATE
	SURVEY BY	
	TRACED BY	
NOTE BOOK	DESIGNED BY	
	QUANTITIES BY	
N.	CHECKED BY	

ECP_13.DWG 2/11/2012 1:52:28 PM

JASON H. LAU
LICENSED PROFESSIONAL ENGINEER
NO. 9360-C
HAWAII USA

4/30/12
EXP. DATE

This work was prepared by me or under my supervision.

STATE OF HAWAII
DEPARTMENT OF TRANSPORTATION
HIGHWAYS DIVISION

EROSION CONTROL PLAN SITE 13

SLOPE IMPROVEMENTS FOR EROSION CONTROL AT VARIOUS SITES ON OAHU, PHASE 5
Project No. HWY-O-01-12

Scale: 1" = 20' Date: April 2012

SHEET No. EC-19 OF 50 SHEETS

"AS-BUILT"

FED. ROAD DIST. NO.	STATE	PROJ. NO.	FISCAL YEAR	SHEET NO.	TOTAL SHEETS
HAWAII	HAW.	HWY-O-01-12	2012	41	123

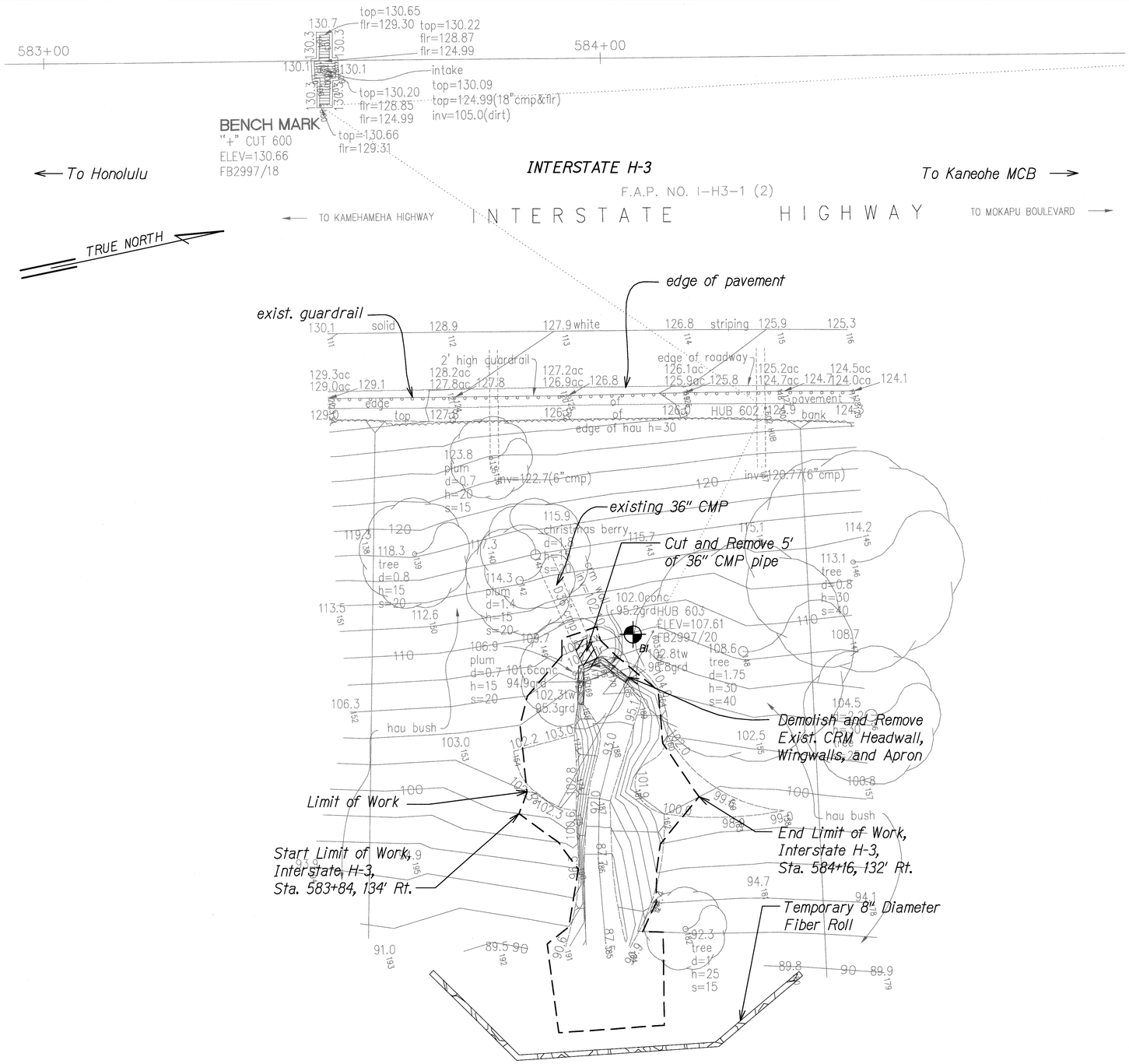

DEMOLITION AND EROSION CONTROL PLAN SITE 14

Scale: 1" = 10'-0"

LEGEND

⊗ D36 ⊗ Existing Drain Pipe to be Removed

— — — Limits of Work

⊕ BI Approx. Location of Boring

Notes:

1. Remove all vegetation within limit of work unless otherwise indicated.
2. Contractor shall schedule construction of outfall improvements during dry weather periods and shall be prepared in case of rainfall events. The Contractor shall provide for temporary bypass or detention of stormwater flows or other measures to avoid flooding of properties upstream or adjacent to the site.
3. For boring log data, see Sheet No. EC-50.

ORIGINAL PLAN	SURVEY PLOTTED BY	DATE
	DRAWN BY	
	TRACED BY	
NOTE BOOK	DESIGNED BY	
	QUANTITIES BY	
N.	CHECKED BY	

SITE 14_H3 OUTFALL SECTION_2WHBOY.C2.DWG 2/29/2012 7:55:59 AM

JASON H. LAU LICENSED PROFESSIONAL ENGINEER NO. 9360-C HAWAII USA

4/30/12
SIGN. DATE

This work was prepared by me or under my supervision.

STATE OF HAWAII
DEPARTMENT OF TRANSPORTATION
HIGHWAYS DIVISION

DEMOLITION AND EROSION CONTROL PLAN SITE 14

SLOPE IMPROVEMENTS FOR EROSION CONTROL AT VARIOUS SITES ON OAHU, PHASE 5
Project No. HWY-O-01-12

Scale: 1" = 10' Date: April 2012

SHEET No. EC-20 OF 50 SHEETS

FED. ROAD DIST. NO.	STATE	PROJ. NO.	FISCAL YEAR	SHEET NO.	TOTAL SHEETS
HAWAII	HAW.	HWY-O-01-12	2012	42	123

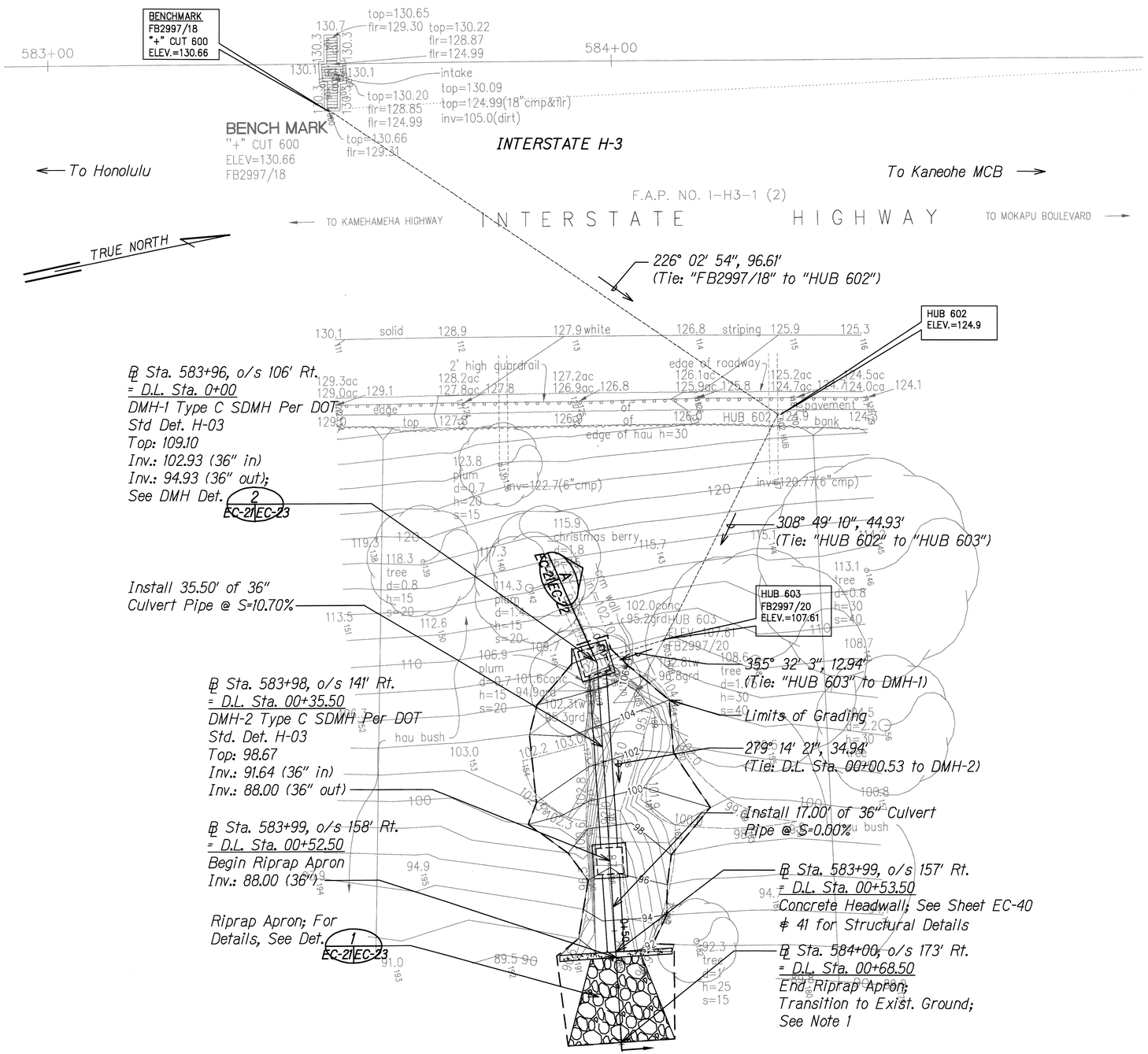

EROSION CONTROL PLAN SITE 14 LAYOUT

Scale: 1" = 10'-0"

LEGEND

- --100--- Existing Contour
- —100— Finish Contour
- New Drain Manhole and Pipe
- Riprap Apron

Estimated Area of Grading: 1,430 SF

Notes:

1. The Contractor shall transition downstream edge of riprap apron to existing ground at a maximum 3H:1V slope.
2. For typical drain pipe trench detail, see Sheet No. EC-23.
3. The Contractor shall install erosion control matting over disturbed areas to control sediment runoff from the site in accordance with the plans and specifications.

ORIGINAL PLAN	SURVEY PLOTTED BY	DATE
	DRAWN BY	
NOTE BOOK	TRACED BY	
	DESIGNED BY	
	QUANTITIES BY	
No.	CHECKED BY	

SITE 14-133 OUTFALL SECTION 2MHBOX.C2.DWG 4/23/2012 8:05:40 AM

JASON H. LAU
LICENSED PROFESSIONAL ENGINEER
NO. 9360-C
HAWAII USA

4/30/12
EXP. DATE

This work was prepared by me or under my supervision.

STATE OF HAWAII
DEPARTMENT OF TRANSPORTATION
HIGHWAYS DIVISION

EROSION CONTROL PLAN
SITE 14 LAYOUT

SLOPE IMPROVEMENTS FOR EROSION CONTROL AT VARIOUS SITES ON OAHU, PHASE 5
Project No. HWY-O-01-12

Scale: 1" = 10' Date: April 2012

SHEET No. EC-21 OF 50 SHEETS

FED. ROAD DIST. NO.	STATE	PROJ. NO.	FISCAL YEAR	SHEET NO.	TOTAL SHEETS
HAWAII	HAW.	HWY-O-01-12	2012	43	123

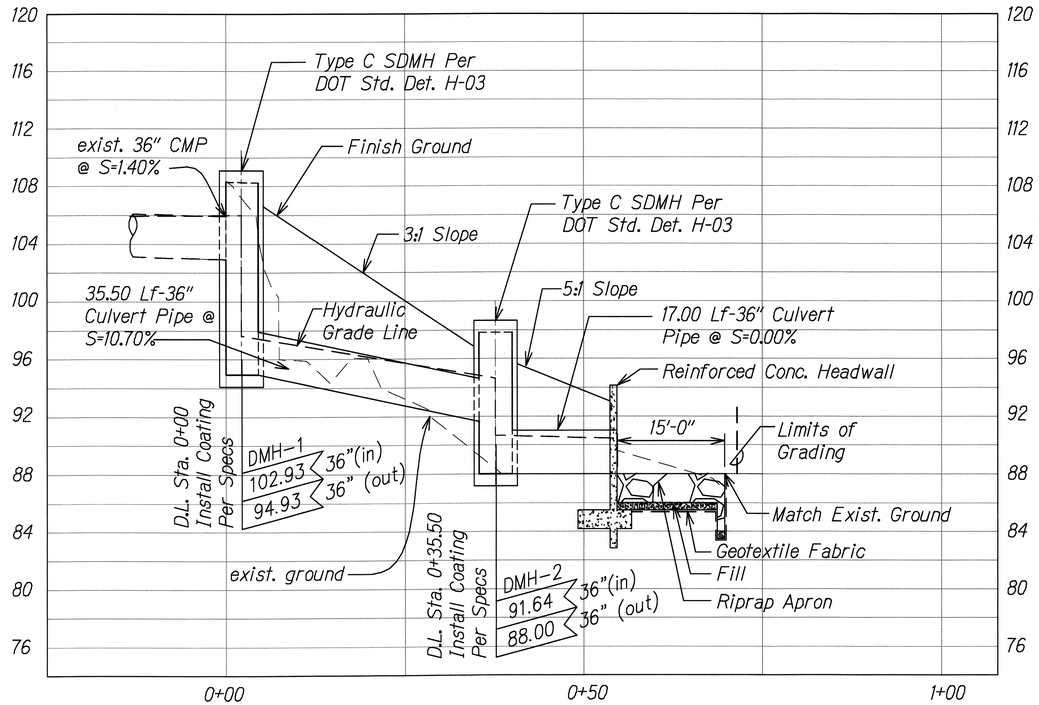

SECTION A
EC-21 EC-22
Scale: Horiz. 1" = 10'-0"
Vert. 1" = 5'-0"

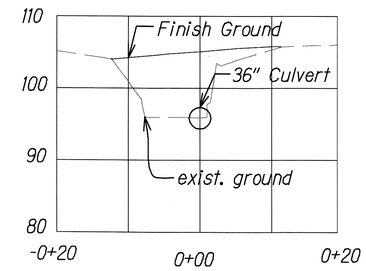

STA. 00+10
Scale: Horiz. 1" = 10'-0"
Vert. 1" = 10'-0"

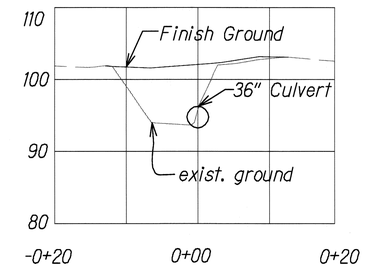

STA. 00+20
Scale: Horiz. 1" = 10'-0"
Vert. 1" = 10'-0"

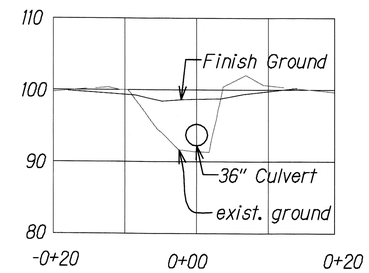

STA. 00+30
Scale: Horiz. 1" = 10'-0"
Vert. 1" = 10'-0"

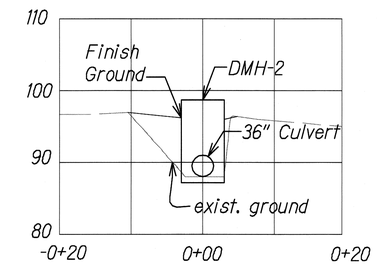

STA. 00+40
Scale: Horiz. 1" = 10'-0"
Vert. 1" = 10'-0"

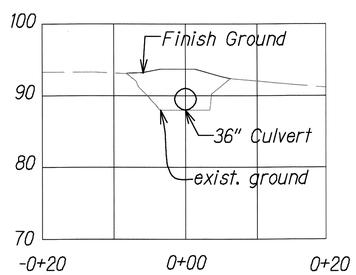

STA. 00+50
Scale: Horiz. 1" = 10'-0"
Vert. 1" = 10'-0"

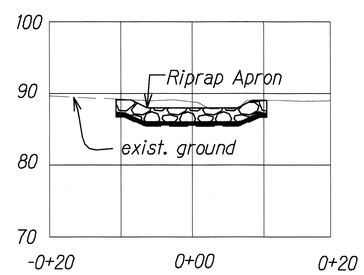

STA. 00+60
Scale: Horiz. 1" = 10'-0"
Vert. 1" = 10'-0"

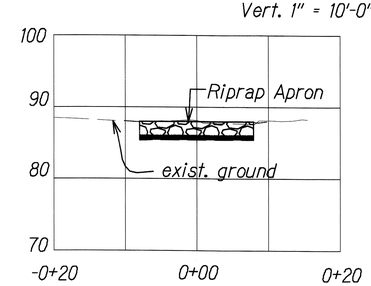

STA. 00+65
Scale: Horiz. 1" = 10'-0"
Vert. 1" = 10'-0"

SITE 14 ESTIMATED QUANTITIES	
Cut	8 cubic yards
Fill	144 cubic yards

NOTES:

1. Quantity of excavation shown in the Site 14 Estimated Quantities table may not correspond with the actual quantity of work and is shown for the comparison of bids only. There will be no increase in contract price or contract time if the actual quantity exceeds the estimated quantity shown in the Site 14 Estimated Quantities table up to a maximum of 200 cubic yards.

JASON H. LAU
LICENSED PROFESSIONAL ENGINEER
NO. 9360-C
HAWAII USA
4/30/12
EXP. DATE
This work was prepared by me or under my supervision.

STATE OF HAWAII
DEPARTMENT OF TRANSPORTATION
HIGHWAYS DIVISION

EROSION CONTROL PLAN
SITE 14 SECTIONS

SLOPE IMPROVEMENTS FOR EROSION CONTROL AT VARIOUS SITES ON OAHU, PHASE 5
Project No. HWY-O-01-12
Scale: As Shown
Date: April 2012

SHEET No. EC-22 OF 50 SHEETS

ORIGINAL PLAN | SURVEY PLOTTED BY | DRAWN BY | TRACED BY | DESIGNED BY | QUANTITIES BY | CHECKED BY | DATE
NOTE BOOK No.

SITE 14_43 OUTFALL_SECTION_2WHBOX.C2.DWG 2/29/2012 7:55:39 AM

FED. ROAD DIST. NO.	STATE	PROJ. NO.	FISCAL YEAR	SHEET NO.	TOTAL SHEETS
HAWAII	HAW.	HWY-O-01-12	2012	44	123

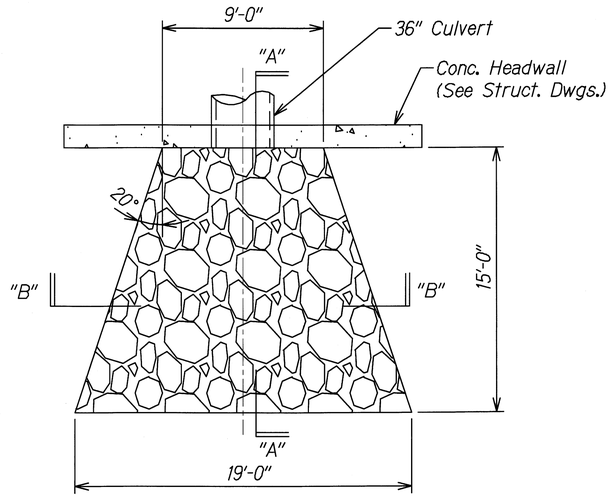

PLAN

Notes:

1. See EC-40 & 41 for reinforced concrete headwall and footing details.
2. Extend riprap on side slopes at 2:1 slope where applicable

RIPRAP APRON DETAIL (1 / EC-21 EC-23)
Not to Scale

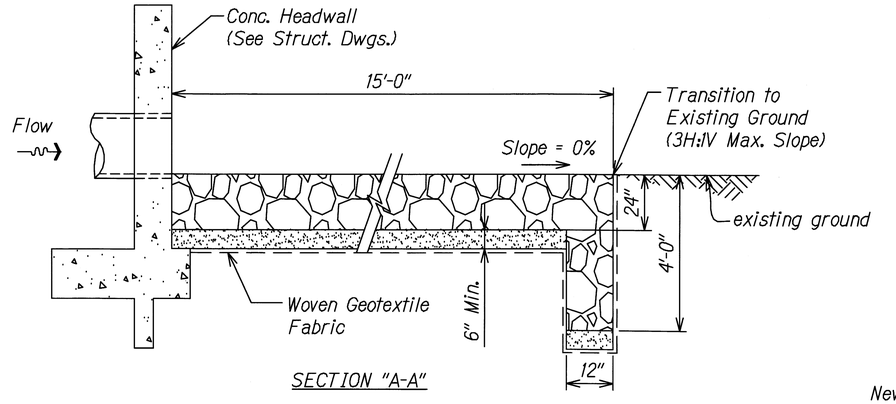

SECTION "A-A"

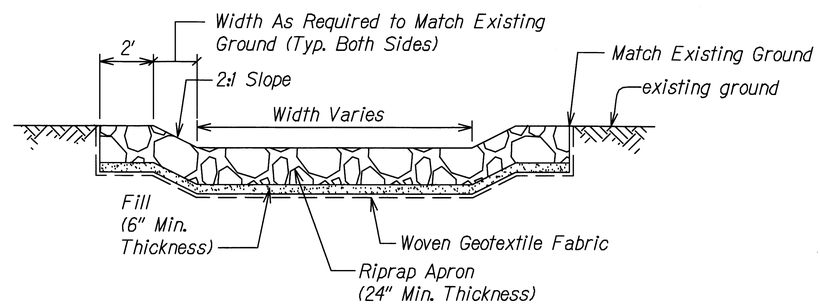

SECTION "B-B"

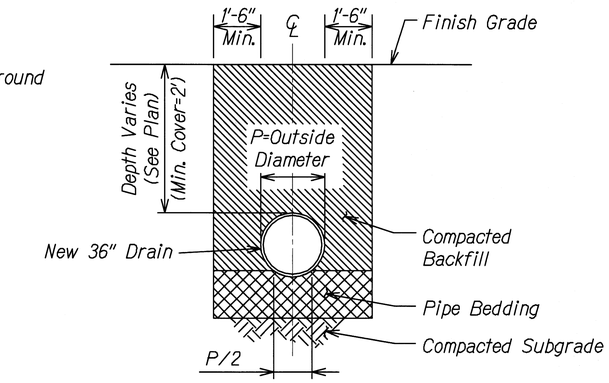

DRAIN TRENCH DETAIL (3)
Not to Scale

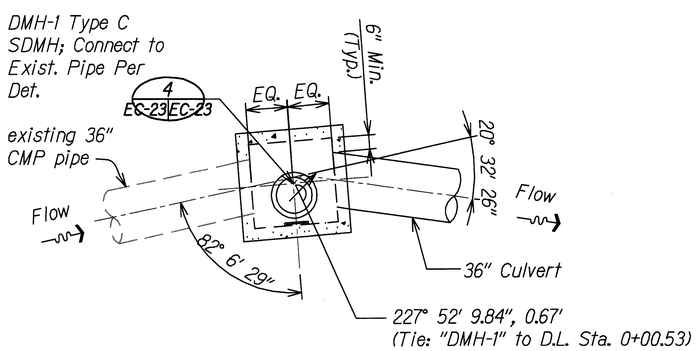

PLAN

Note: See DOT Std. Plan H-03 for reinforcement and other details not shown.

DMH-1 MANHOLE DETAIL (2 / EC-21 EC-23)
Scale: 3" = 1'-0"

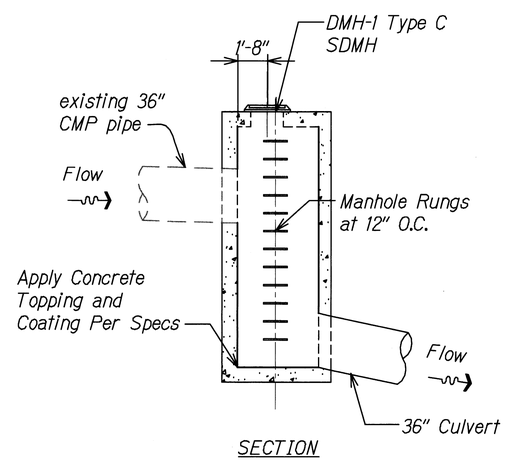

SECTION

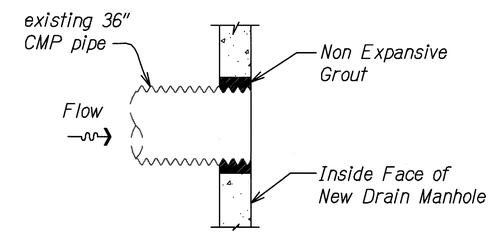

MANHOLE CONNECTION DETAIL (4 / EC-23 EC-23)
Not to Scale

JASON H. LAU
LICENSED PROFESSIONAL ENGINEER
NO. 9360-C
HAWAII USA
4/30/12
EXP. DATE
This work was prepared by me or under my supervision.

STATE OF HAWAII
DEPARTMENT OF TRANSPORTATION
HIGHWAYS DIVISION

EROSION CONTROL PLAN
SITE 14 DETAILS

SLOPE IMPROVEMENTS FOR EROSION CONTROL AT VARIOUS SITES ON OAHU, PHASE 5
Project No. HWY-O-01-12

Scale: As Shown Date: April 2012

SHEET No. EC-23 OF 50 SHEETS

ORIGINAL PLAN | SURVEY PLOTTED BY | DRAWN BY | TRACED BY | DESIGNED BY | QUANTITIES BY | CHECKED BY | DATE
NOTE BOOK | NO.

SITE 14.13 OUTFALL_SECTION_DWRDV.CZDWG 2/29/2012 7:55:59 AM

FED. ROAD DIST. NO.	STATE	PROJ. NO.	FISCAL YEAR	SHEET NO.	TOTAL SHEETS
HAWAII	HAW.	HWY-O-01-12	2012	45	123

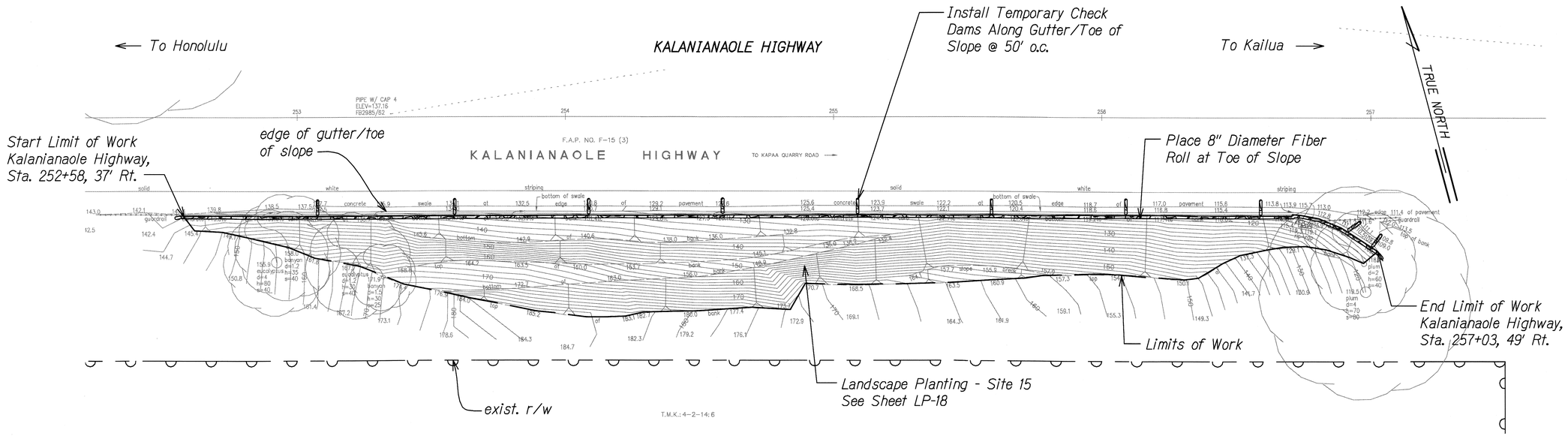

EROSION CONTROL PLAN SITE 15

Scale: 1" = 20'-0"

Estimated Area of Grassing Measured Along Slope Face: 10,600 SF

Notes:

1. For anchor layout, see Sheet EC-25.
2. For erosion mat details, see Sheets EC-42 & 43.
3. For anchored wire mesh system details, see Sheets EC-44 to EC-47.

JASON H. LAU LICENSED PROFESSIONAL ENGINEER NO. 9360-C HAWAII USA

4/30/12

EXP. DATE

This work was prepared by me or under my supervision.

STATE OF HAWAII
DEPARTMENT OF TRANSPORTATION
HIGHWAYS DIVISION

EROSION CONTROL PLAN SITE 15

SLOPE IMPROVEMENTS FOR EROSION CONTROL AT VARIOUS SITES ON OAHU, PHASE 5

Project No. HWY-O-01-12

Scale: 1" = 20' Date: April 2012

SHEET No. EC-24 OF 50 SHEETS

ORIGINAL PLAN | SURVEY PLOTTED BY | DRAWN BY | TRACED BY | DESIGNED BY | QUANTITIES BY | CHECKED BY | DATE | NOTE BOOK No.

ECP_15.DWG 1/12/2012 12:55:43 PM

FED. ROAD DIST. NO.	STATE	PROJ. NO.	FISCAL YEAR	SHEET NO.	TOTAL SHEETS
HAWAII	HAW.	HWY-O-01-12	2012	46	123

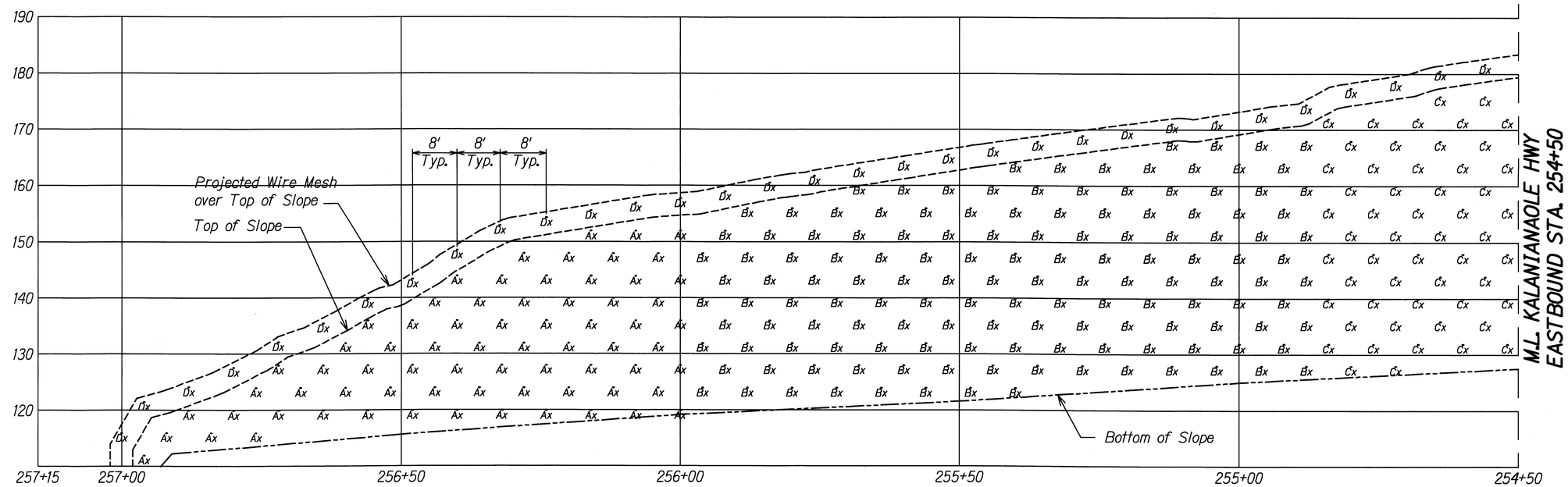

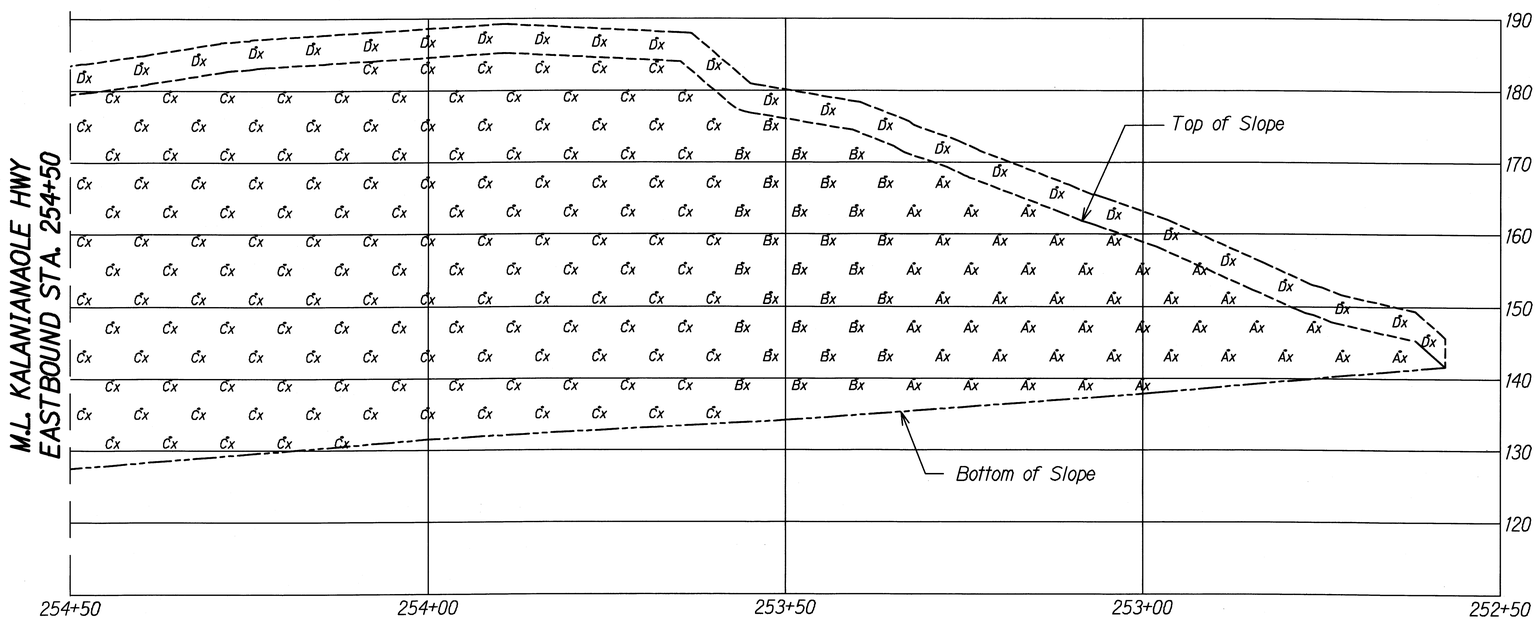

LEGEND

Ax Type A Anchor*

Bx Type B Anchor*

Cx Type C Anchor*

Dx Type D Anchor*

* See Soil and/or Rock Anchor Schedule on Sheet N-3

ORIGINAL PLAN	SURVEY PLOTTED BY	DATE
	DRAWN BY	
	TRACED BY	
NOTE BOOK	DESIGNED BY	
	QUANTITIES BY	
No.	CHECKED BY	

ECP_SITE 15 ANCHOR LAYOUT.DFT.DWG 2/24/2012 12:35:59 PM

JASON H. LAU
LICENSED PROFESSIONAL ENGINEER
NO. 9360-C
HAWAII USA

4/30/12
EXP. DATE

This work was prepared by me or under my supervision.

STATE OF HAWAII
DEPARTMENT OF TRANSPORTATION
HIGHWAYS DIVISION

EROSION CONTROL PLAN
SITE 15 ANCHOR LAYOUT

SLOPE IMPROVEMENTS FOR EROSION CONTROL AT VARIOUS SITES ON OAHU, PHASE 5

Project No. HWY-O-01-12

Scale: 1" = 10' Date: April 2012

SHEET No. EC-25 OF 50 SHEETS

FED. ROAD DIST. NO.	STATE	PROJ. NO.	FISCAL YEAR	SHEET NO.	TOTAL SHEETS
HAWAII	HAW.	HWY-O-01-12	2012	47	123

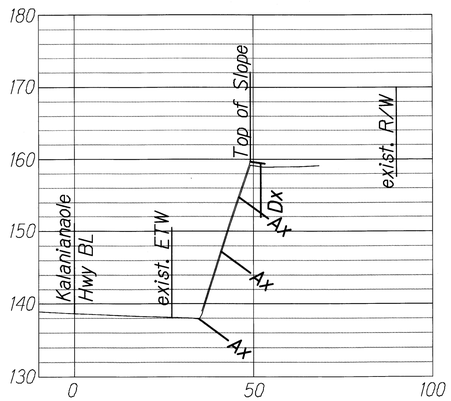

STA. 253+00

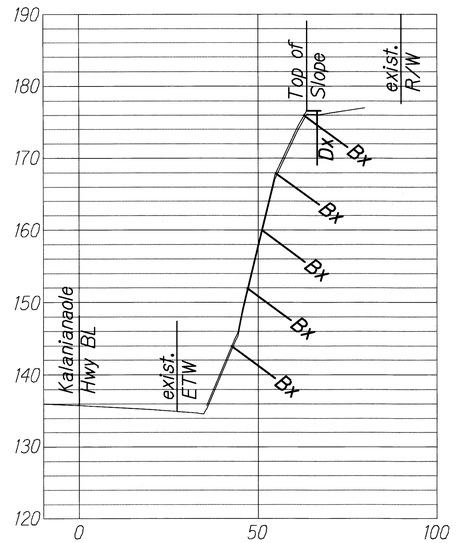

STA. 253+50

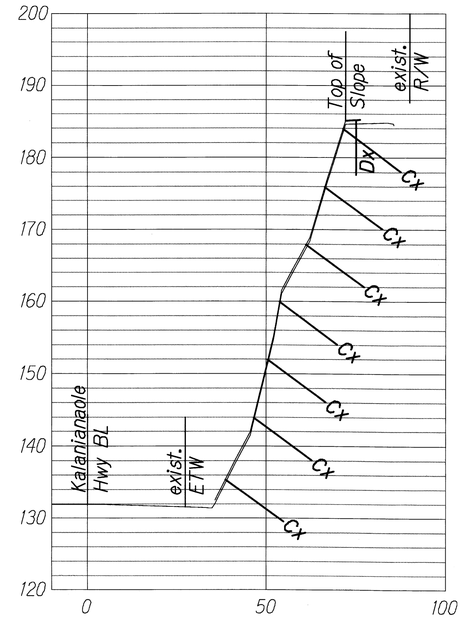

STA. 254+00

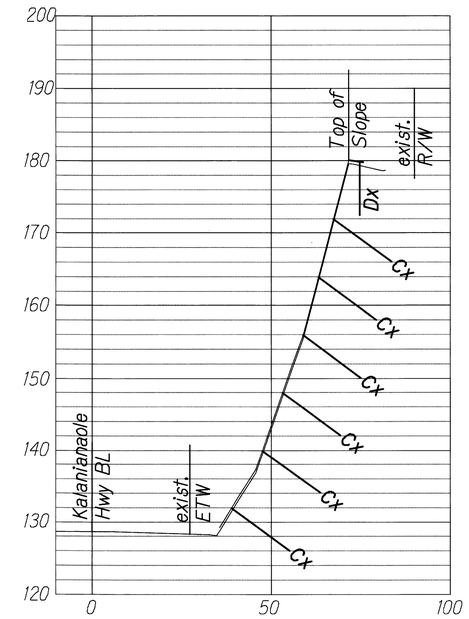

STA. 254+50

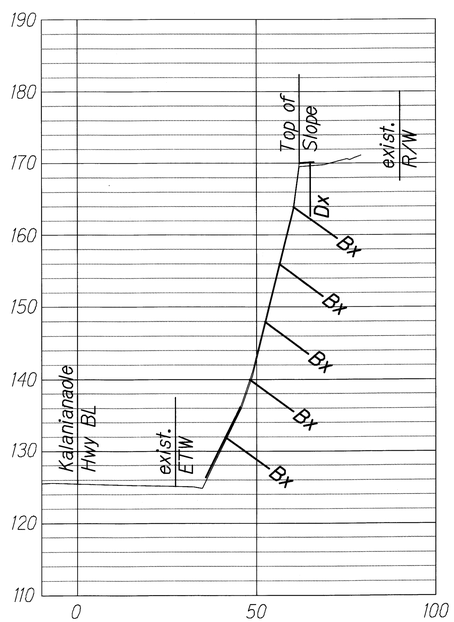

STA. 255+00

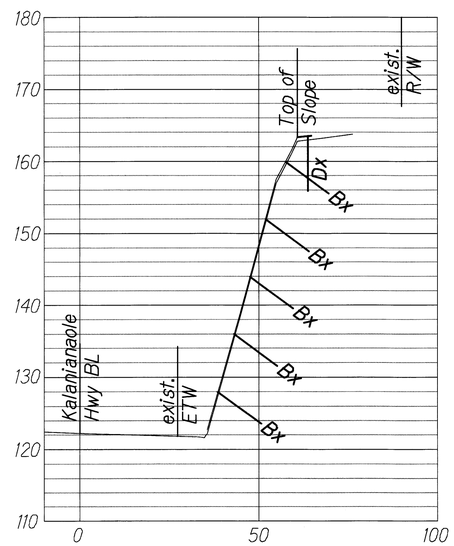

STA. 255+50

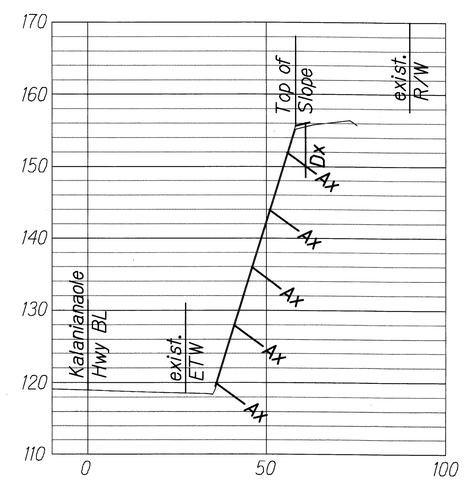

STA. 256+00

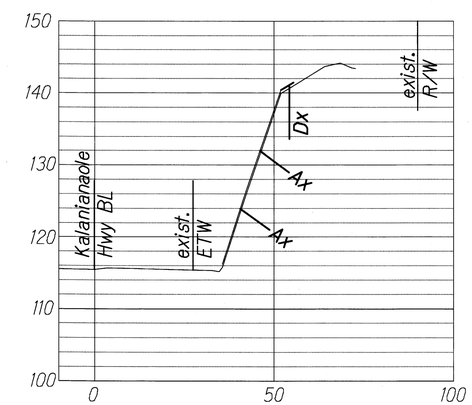

STA. 256+50

LEGEND

Ax Type A Anchor*

Bx Type B Anchor*

Cx Type C Anchor*

Dx Type D Anchor*

*See Soil and/or Rock Anchor Schedule on Sheet N-3

EROSION CONTROL PLAN
SITE 15 SECTIONS

Scale: 1" = 20'-0"

ORIGINAL PLAN	SURVEY PLOTTED BY	DATE
	DRAWN BY	
	TRACED BY	
NOTE BOOK	DESIGNED BY	
	QUANTITIES BY	
No.	CHECKED BY	

EOP_SITE 15 # 16 SECTIONS.DWG 2/1/2012 2:06:51 PM

JASON H. LAU
LICENSED PROFESSIONAL ENGINEER
NO. 9360-C
HAWAII USA

4/30/12
EXP. DATE

This work was prepared by me or under my supervision.

STATE OF HAWAII
DEPARTMENT OF TRANSPORTATION
HIGHWAYS DIVISION

EROSION CONTROL PLAN
SITE 15 SECTIONS

SLOPE IMPROVEMENTS FOR EROSION CONTROL
AT VARIOUS SITES ON OAHU, PHASE 5
Project No. HWY-O-01-12

Scale: 1" = 20' Date: April 2012

SHEET No. EC-26 OF 50 SHEETS

FED. ROAD DIST. NO.	STATE	PROJ. NO.	FISCAL YEAR	SHEET NO.	TOTAL SHEETS
HAWAII	HAW.	HWY-O-01-12	2012	48	123

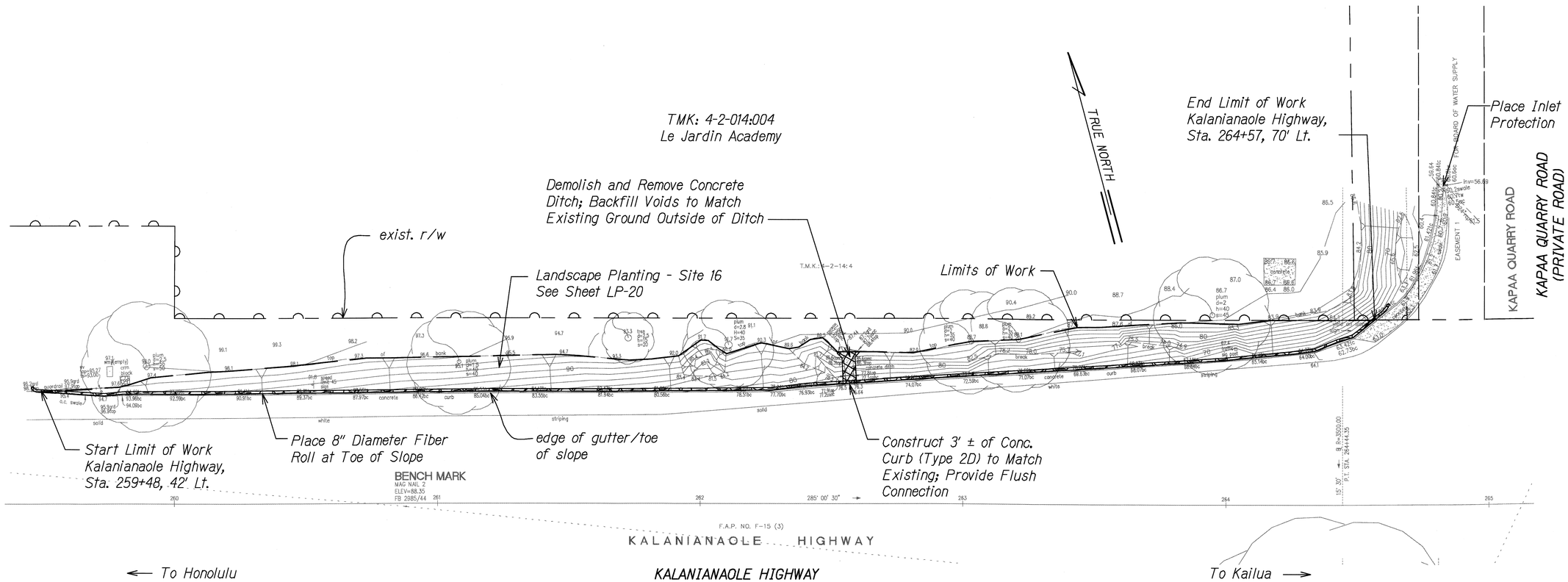

EROSION CONTROL PLAN SITE 16

Scale: 1" = 20'-0"

Estimated Area of Grassing Measured Along Slope Face: 6,075 SF
Estimated Area of Concrete Ditch to be Removed: 65 SF

Notes:

1. Install erosion control matting on slopes greater than 3:1. See Sheet LP-20.
2. For erosion mat details, see Sheets EC-42 & 43.

ORIGINAL PLAN | SURVEY PLOTTED BY ___ DATE | DRAWN BY | TRACED BY | NOTE BOOK | TRANSCRIBED BY | QUANTITIES BY | No. ___ | CHECKED BY

ECP_BLDWG 1/12/2012 12:57:39 PM

JASON H. LAU
LICENSED PROFESSIONAL ENGINEER
NO. 9360-C
HAWAII USA
4/30/12
EXP. DATE
This work was prepared by me or under my supervision.

STATE OF HAWAII
DEPARTMENT OF TRANSPORTATION
HIGHWAYS DIVISION

EROSION CONTROL PLAN SITE 16

SLOPE IMPROVEMENTS FOR EROSION CONTROL AT VARIOUS SITES ON OAHU, PHASE 5
Project No. HWY-O-01-12
Scale: 1" = 20' Date: April 2012

SHEET No. EC-27 OF 50 SHEETS

FED. ROAD DIST. NO.	STATE	PROJ. NO.	FISCAL YEAR	SHEET NO.	TOTAL SHEETS
HAWAII	HAW.	HWY-O-01-12	2012	49	123

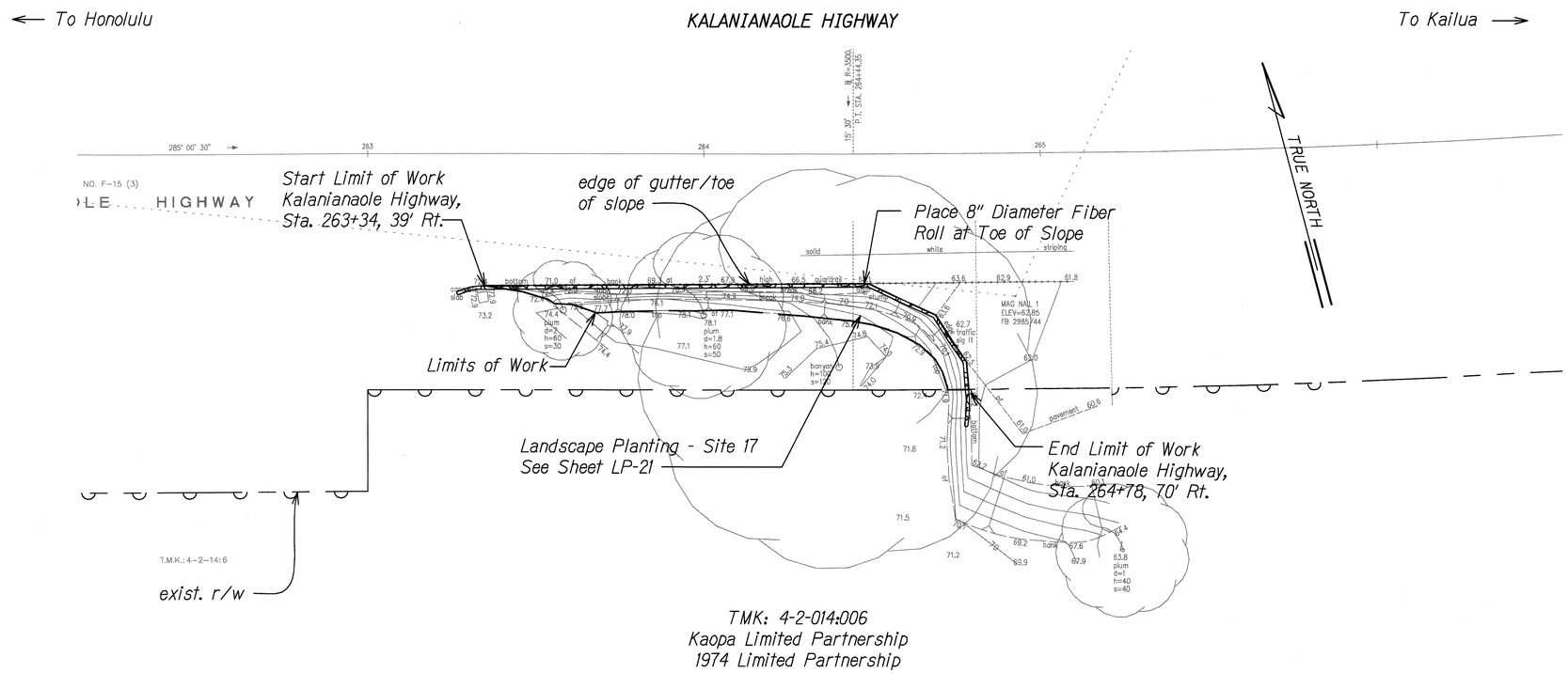

EROSION CONTROL PLAN SITE 17

Scale: 1" = 20'-0"

Estimated Area of Grassing Measured Along Slope Face: 1,200 SF

Notes:

1. Install erosion control matting on slopes greater than 3:1. See Sheet LP-21.
2. For erosion mat details, see Sheets EC-42 & 43.

JASON H. LAU
LICENSED PROFESSIONAL ENGINEER
NO. 9360-C
HAWAII USA
4/30/12
EXP. DATE
This work was prepared by me or under my supervision.

STATE OF HAWAII
DEPARTMENT OF TRANSPORTATION
HIGHWAYS DIVISION

EROSION CONTROL PLAN
SITE 17

SLOPE IMPROVEMENTS FOR EROSION CONTROL
AT VARIOUS SITES ON OAHU, PHASE 5
Project No. HWY-O-01-12

Scale: 1" = 20' Date: April 2012

SHEET No. EC-28 OF 50 SHEETS

ORIGINAL PLAN | SURVEY PLOTTED BY | DRAWN BY | TRACED BY | DESIGNED BY | QUANTITIES BY | CHECKED BY | DATE
NOTE BOOK No.

EDP TLDNG 1/12/2012 10:50:47 PM

FED. ROAD DIST. NO.	STATE	PROJ. NO.	FISCAL YEAR	SHEET NO.	TOTAL SHEETS
HAWAII	HAW.	HWY-O-01-12	2012	50	123

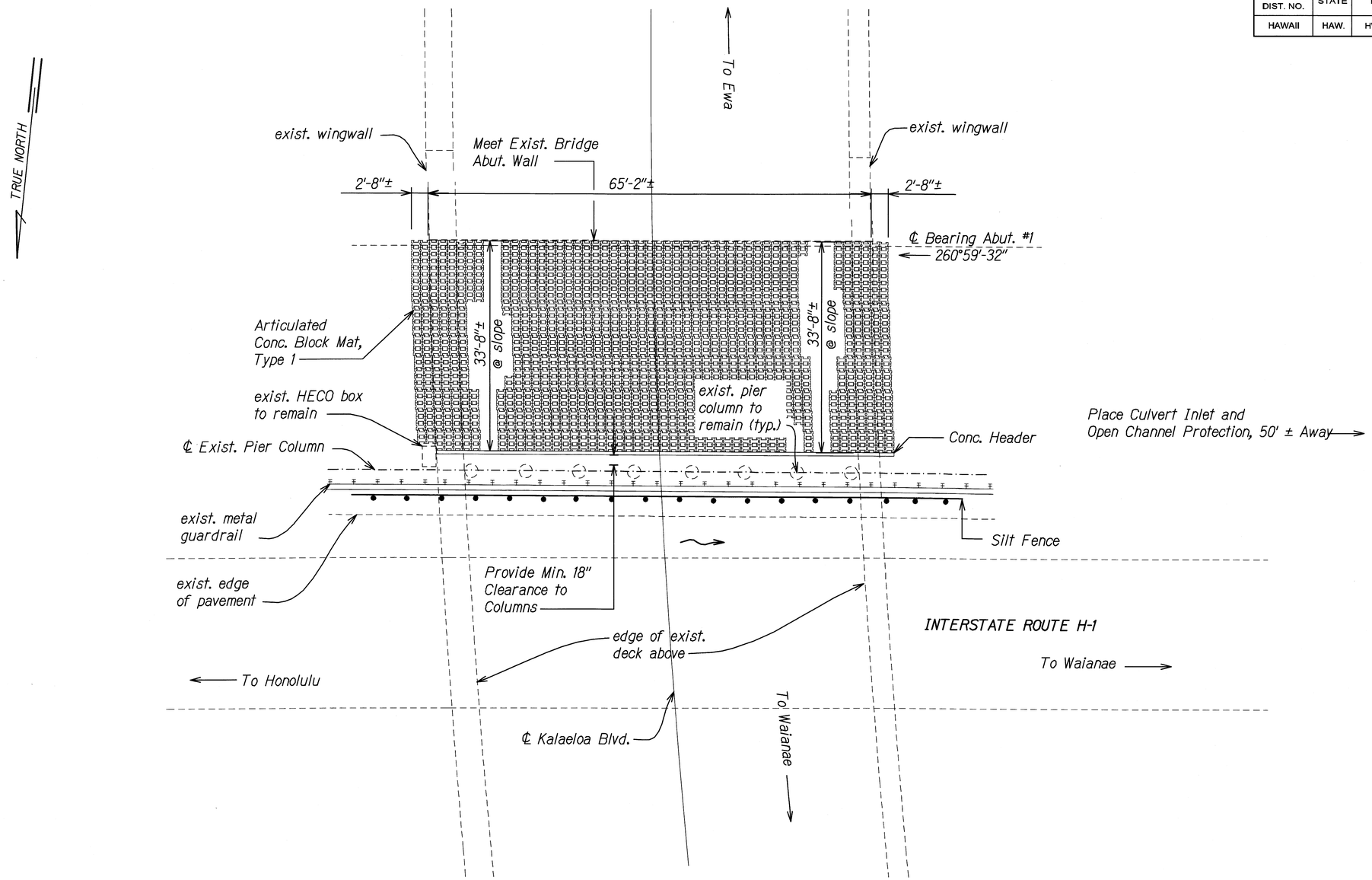

EROSION CONTROL PLAN SITE 18 - KALAELOA BLVD. OVERPASS AT H-1, SOUTH ABUTMENT

Scale: 1/8" = 1'-0"

Estimated Area of Articulated Concrete Mat measured along slope face: 2,374 SQ. FT.

ORIGINAL PLAN	SURVEY PLOTTED BY	DATE
	DRAWN BY	
	TRACED BY	
NOTE BOOK	DESIGNED BY	
	QUANTITIES BY	
No.	CHECKED BY	

ECP_SITE 18.DWG 1/6/2012 1:09:11 PM

JASON H. LAU
LICENSED PROFESSIONAL ENGINEER
NO. 9360-C
HAWAII USA
4/30/12
EXP. DATE
This work was prepared by me or under my supervision.

STATE OF HAWAII
DEPARTMENT OF TRANSPORTATION
HIGHWAYS DIVISION

EROSION CONTROL PLAN SITE 18

SLOPE IMPROVEMENTS FOR EROSION CONTROL AT VARIOUS SITES ON OAHU, PHASE 5
Project No. HWY-O-01-12

Scale: 1/8" = 1' Date: April 2012

SHEET No. EC-29 OF 50 SHEETS

FED. ROAD DIST. NO.	STATE	PROJ. NO.	FISCAL YEAR	SHEET NO.	TOTAL SHEETS
HAWAII	HAW.	HWY-O-01-12	2012	51	123

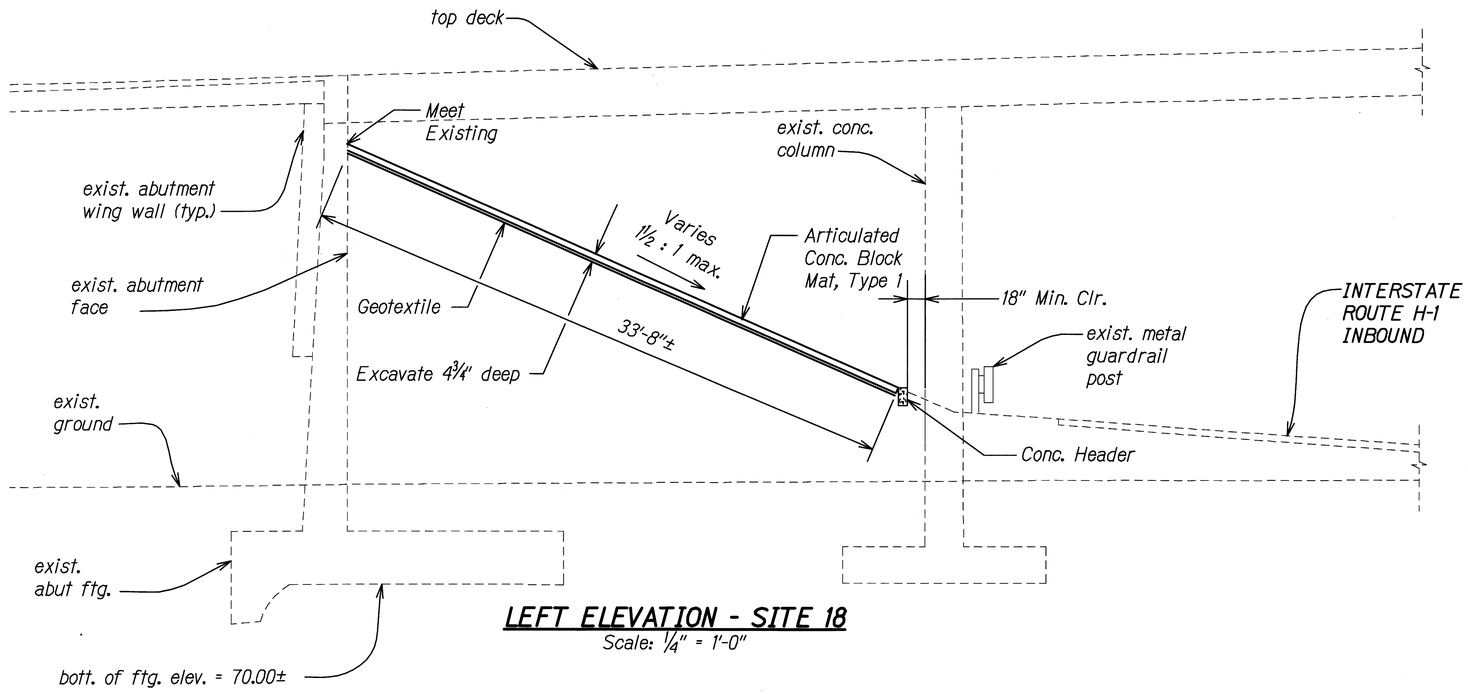

LEFT ELEVATION - SITE 18

Scale: ¼" = 1'-0"

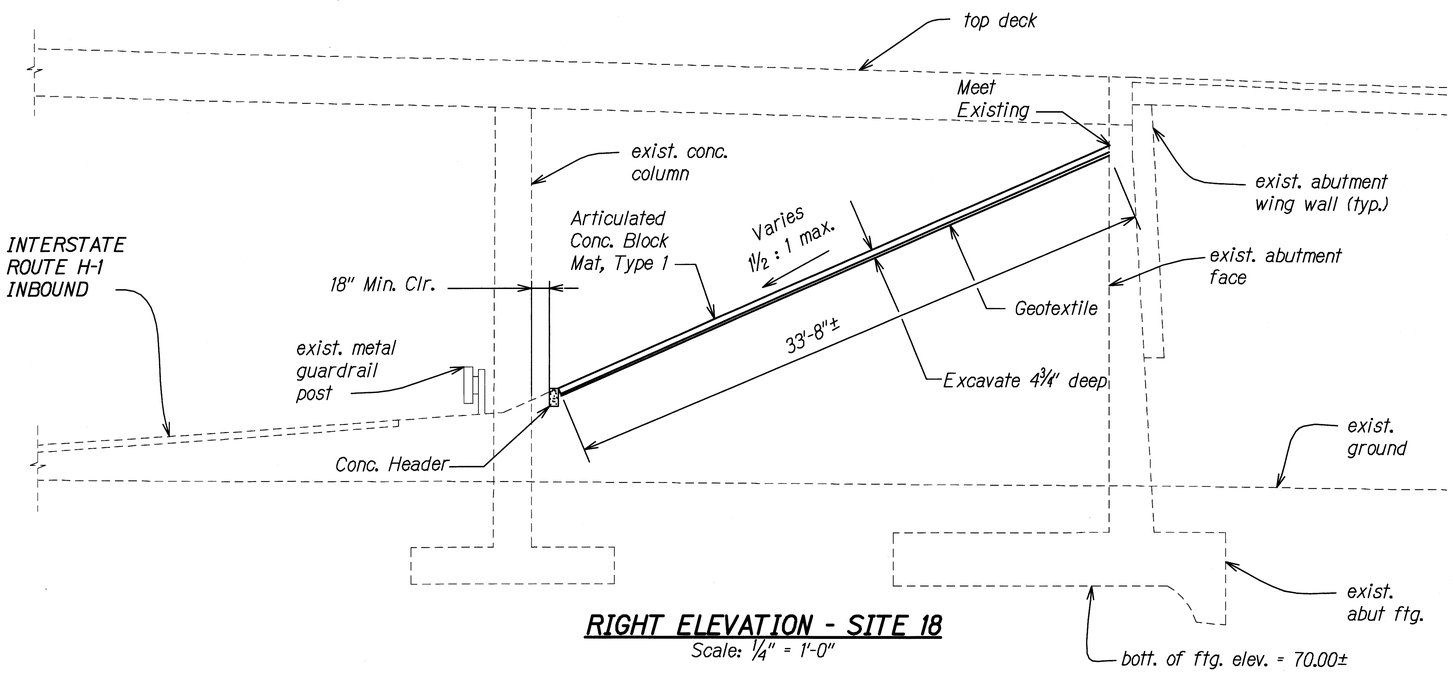

RIGHT ELEVATION - SITE 18

Scale: ¼" = 1'-0"

ORIGINAL PLAN	SURVEY PLOTTED BY	DATE
	SURVEY BY	
	TRACED BY	
NOTE BOOK	DESIGNED BY	
	QUANTITIES BY	
No.	CHECKED BY	

EC2-SITE 18.DWG 1/3/2012 8:15:31 AM

JASON H. LAU
LICENSED PROFESSIONAL ENGINEER
NO. 9360-C
HAWAII USA

4/30/12
EXP. DATE

This work was prepared by me or under my supervision.

STATE OF HAWAII
DEPARTMENT OF TRANSPORTATION
HIGHWAYS DIVISION

EROSION CONTROL ELEVATION SITE 18

SLOPE IMPROVEMENTS FOR EROSION CONTROL AT VARIOUS SITES ON OAHU, PHASE 5

Project No. HWY-O-01-12

Scale: 1/4" = 1' Date: April 2012

SHEET No. EC-30 OF 50 SHEETS

FED. ROAD DIST. NO.	STATE	PROJ. NO.	FISCAL YEAR	SHEET NO.	TOTAL SHEETS
HAWAII	HAW.	HWY-O-01-12	2012	52	123

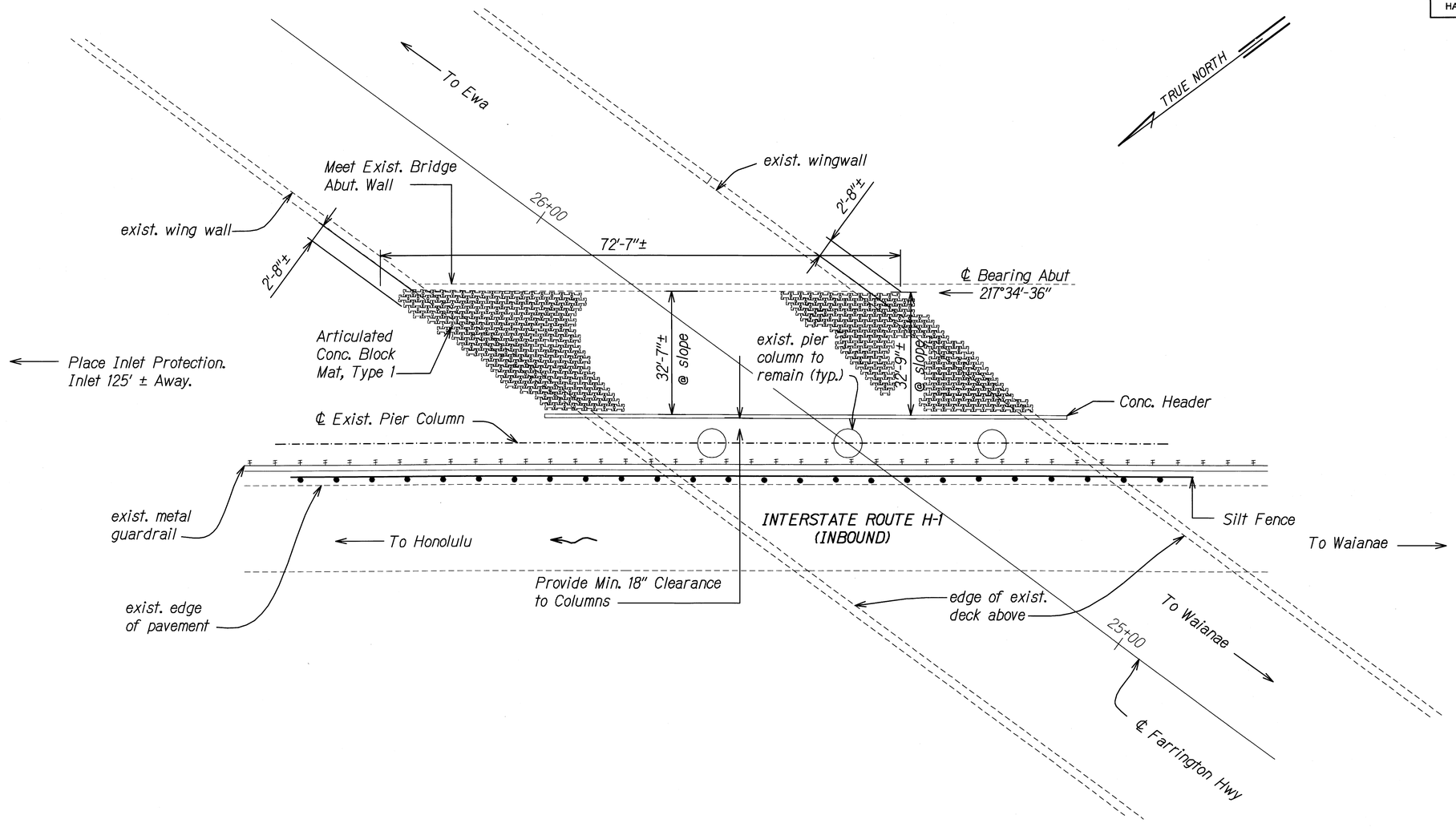

EROSION CONTROL PLAN SITE 19 - FARRINGTON HIGHWAY OVERPASS AT H-1, SOUTH ABUTMENT

Scale: 1/8" = 1'-0"

Estimated Area of Articulated Concrete Mat measured along slope face: 2,546 SQ. FT.

ORIGINAL PLAN | SURVEY PLOTTED BY ___ DATE | DRAWN BY | TRACED BY | NOTE BOOK | DESIGNED BY | QUANTITIES BY | CHECKED BY | No.

ECP_SITE 19.DWG 1/6/2012 10:22 PM

JASON H. LAU LICENSED PROFESSIONAL ENGINEER NO. 9360-C HAWAII USA

4/30/12

REG. DATE

This work was prepared by me or under my supervision.

STATE OF HAWAII
DEPARTMENT OF TRANSPORTATION
HIGHWAYS DIVISION

EROSION CONTROL PLAN SITE 19

SLOPE IMPROVEMENTS FOR EROSION CONTROL AT VARIOUS SITES ON OAHU, PHASE 5

Project No. HWY-O-01-12

Scale: 1/8" = 1' Date: April 2012

SHEET No. EC-31 OF 50 SHEETS

FED. ROAD DIST. NO.	STATE	PROJ. NO.	FISCAL YEAR	SHEET NO.	TOTAL SHEETS
HAWAII	HAW.	HWY-O-01-12	2012	53	123

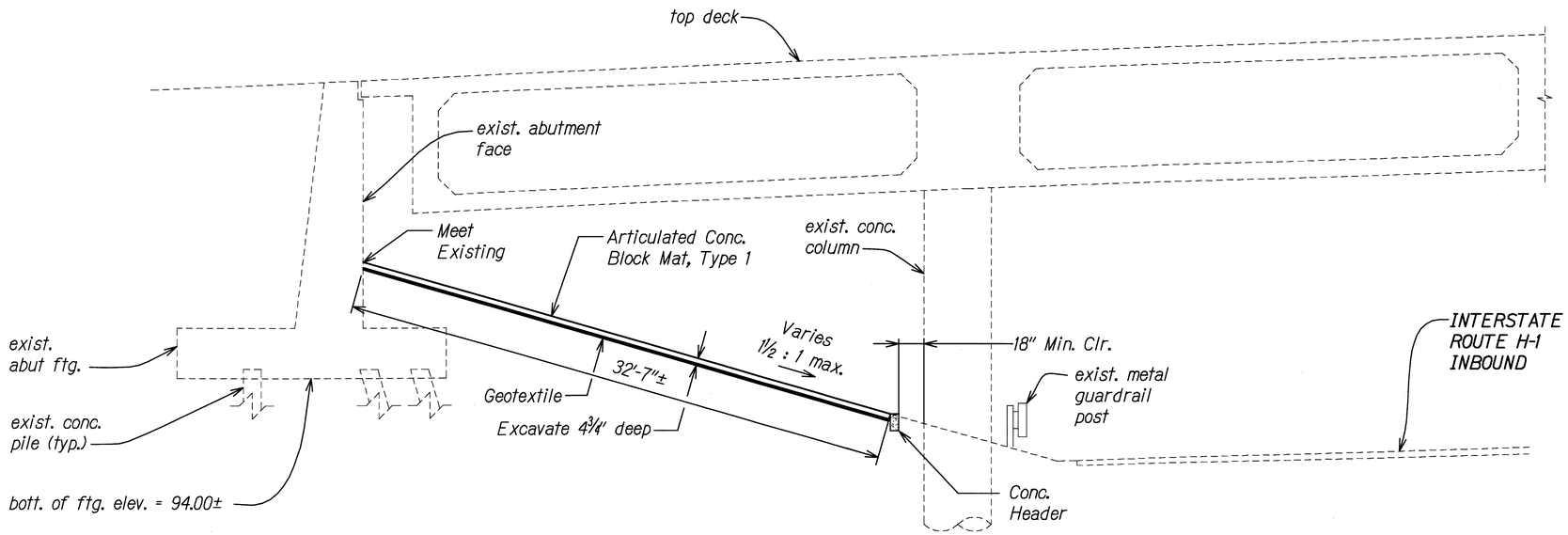

LEFT ELEVATION - SITE 19

Scale: ¼" = 1'-0"

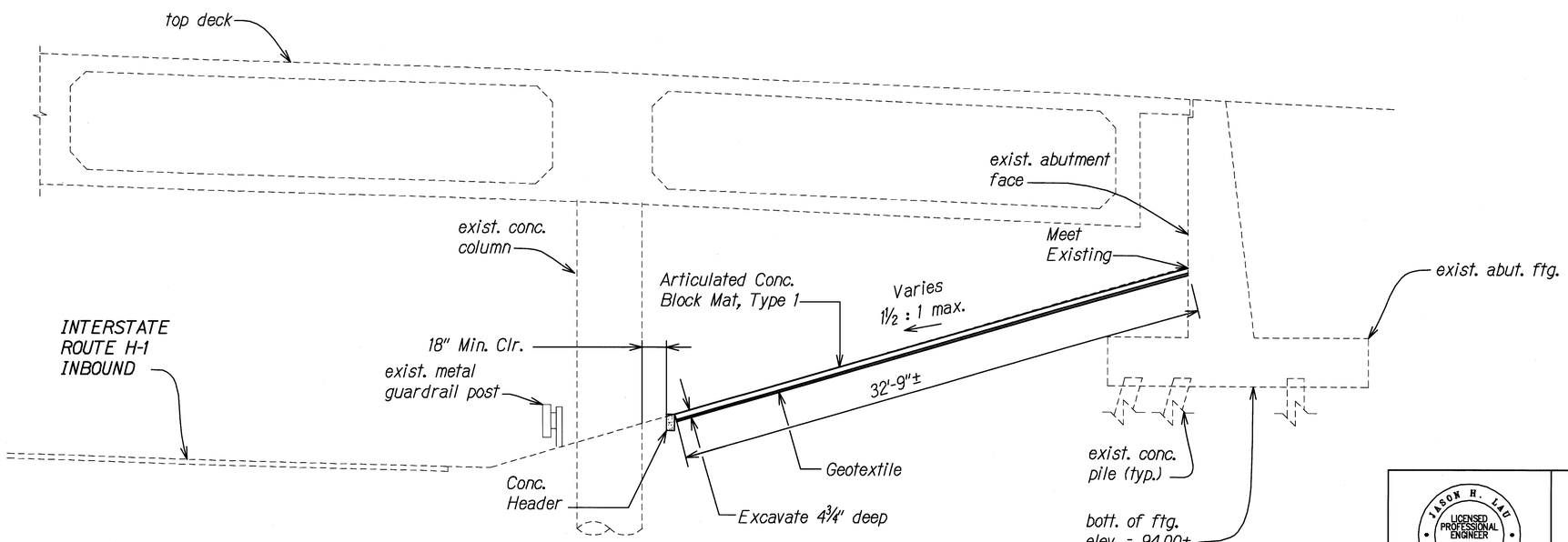

RIGHT ELEVATION - SITE 19

Scale: ¼" = 1'-0"

ORIGINAL PLAN	SURVEY PLOTTED BY	DATE
	DRAWN BY	
	TRACED BY	
NOTE BOOK	DESIGNED BY	
	QUANTITIES BY	
No.	CHECKED BY	

ECP_SITE 19 ELEVATION.DWG 1/4/2012 4:56:26 PM

JASON H. LAU
LICENSED PROFESSIONAL ENGINEER
NO. 9360-C
HAWAII USA

4/30/12
EXP. DATE

This work was prepared by me or under my supervision.

STATE OF HAWAII
DEPARTMENT OF TRANSPORTATION
HIGHWAYS DIVISION

EROSION CONTROL ELEVATION SITE 19

SLOPE IMPROVEMENTS FOR EROSION CONTROL AT VARIOUS SITES ON OAHU, PHASE 5

Project No. HWY-O-01-12

Scale: 1/4" = 1 Date: April 2012

SHEET No. EC-32 OF 50 SHEETS

FED. ROAD DIST. NO.	STATE	PROJ. NO.	FISCAL YEAR	SHEET NO.	TOTAL SHEETS
HAWAII	HAW.	HWY-O-01-12	2012	54	123

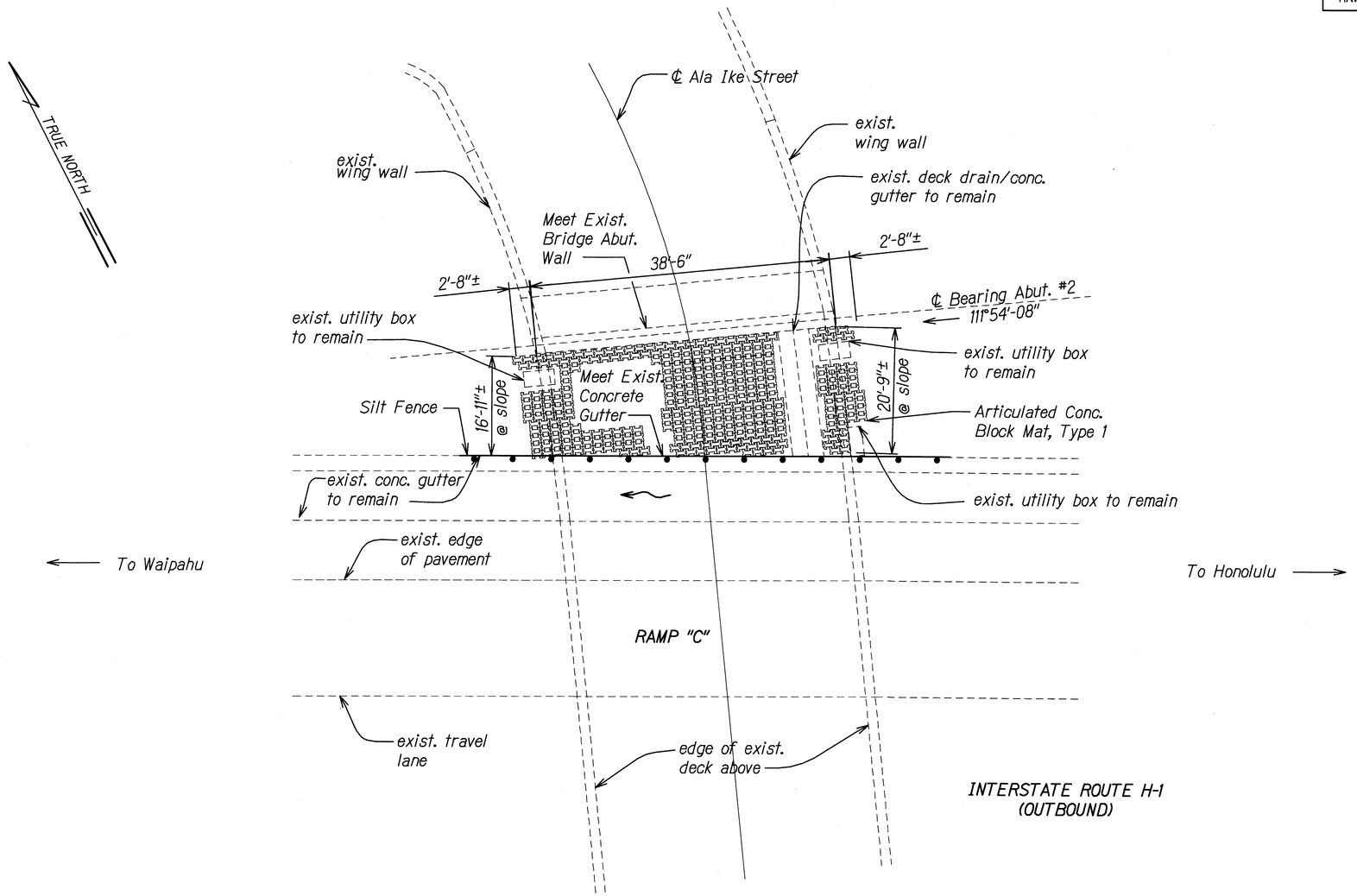

EROSION CONTROL PLAN SITE 20 - WAIAWA ROAD OVERPASS, NORTH ABUTMENT

Scale: 1/8" = 1'-0"

Estimated Area of Articulated Concrete Mat Type 1 measured along slope face: 826 SQ. FT.

JASON H. LAU
LICENSED PROFESSIONAL ENGINEER
NO. 9360-C
HAWAII USA
4/30/12
EXP. DATE
This work was prepared by me or under my supervision.

STATE OF HAWAII
DEPARTMENT OF TRANSPORTATION
HIGHWAYS DIVISION

EROSION CONTROL PLAN SITE 20

SLOPE IMPROVEMENTS FOR EROSION CONTROL AT VARIOUS SITES ON OAHU, PHASE 5
Project No. HWY-O-01-12
Scale: 1/8" = 1' Date: April 2012

SHEET No. EC-33 OF 50 SHEETS

ORIGINAL PLAN	SURVEY PLOTTED BY	DATE
	DRAWN BY	
	TRACED BY	
NOTE BOOK	DESIGNED BY	
	QUANTITIES BY	
No.	CHECKED BY	

ECP-SITE 20.DWG 4/3/2012 8:03:35 AM

FED. ROAD DIST. NO.	STATE	PROJ. NO.	FISCAL YEAR	SHEET NO.	TOTAL SHEETS
HAWAII	HAW.	HWY-O-01-12	2012	55	123

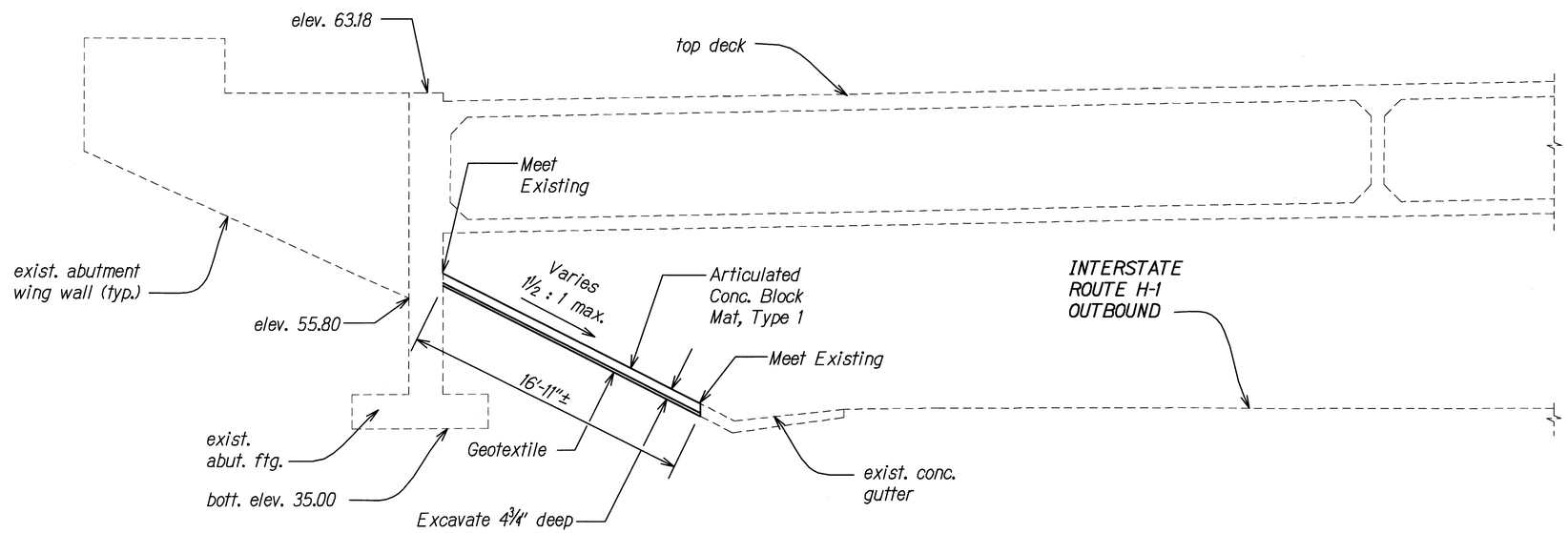

LEFT ELEVATION - SITE 20

Scale: ¼" = 1'-0"

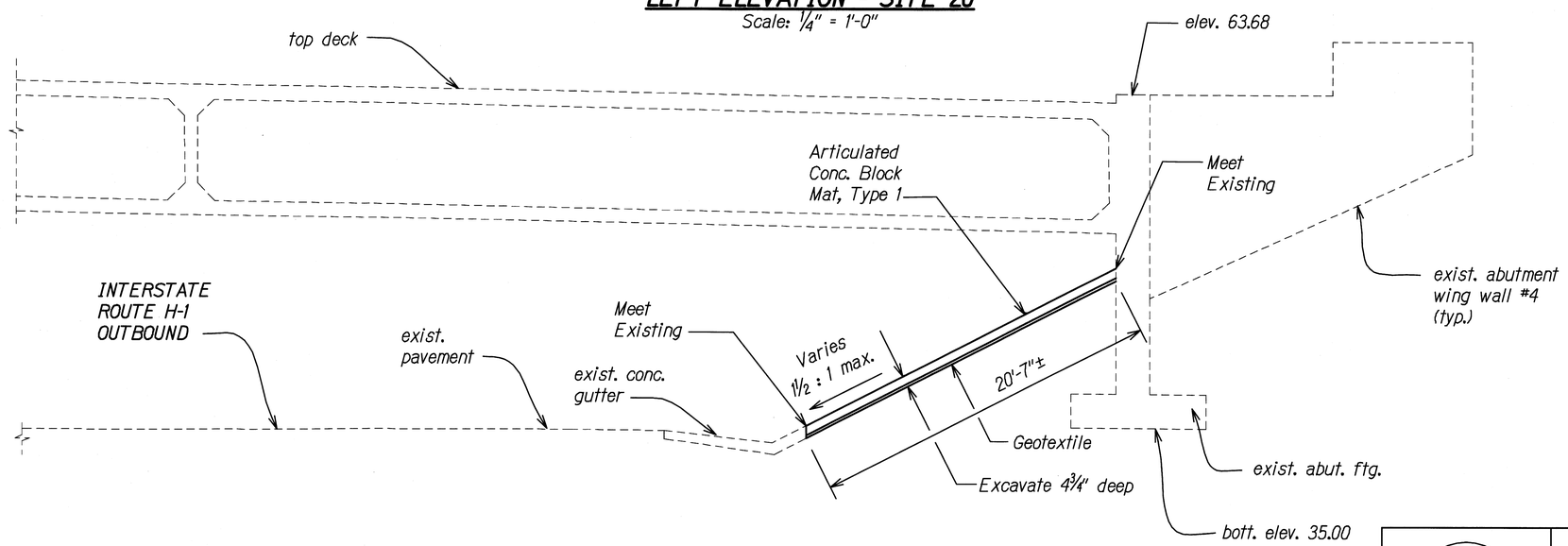

RIGHT ELEVATION - SITE 20

Scale: ¼" = 1'-0"

ORIGINAL PLAN	SURVEY PLOTTED BY	DATE
	DRAWN BY	
	TRACED BY	
NOTE BOOK	DESIGNED BY	
	QUANTITIES BY	
No.	CHECKED BY	

ECP-SITE 20.DWG 4/3/2012 8:53:35 AM

JASON H. LAU LICENSED PROFESSIONAL ENGINEER NO. 9360-C HAWAII USA

4/30/12

EXP. DATE

This work was prepared by me or under my supervision.

STATE OF HAWAII
DEPARTMENT OF TRANSPORTATION
HIGHWAYS DIVISION

EROSION CONTROL ELEVATION SITE 20

SLOPE IMPROVEMENTS FOR EROSION CONTROL AT VARIOUS SITES ON OAHU, PHASE 5

Project No. HWY-O-01-12

Scale: 1/4" = 1' Date: April 2012

SHEET No. EC-34 OF 50 SHEETS

FED. ROAD DIST. NO.	STATE	PROJ. NO.	FISCAL YEAR	SHEET NO.	TOTAL SHEETS
HAWAII	HAW.	HWY-O-01-12	2012	56	123

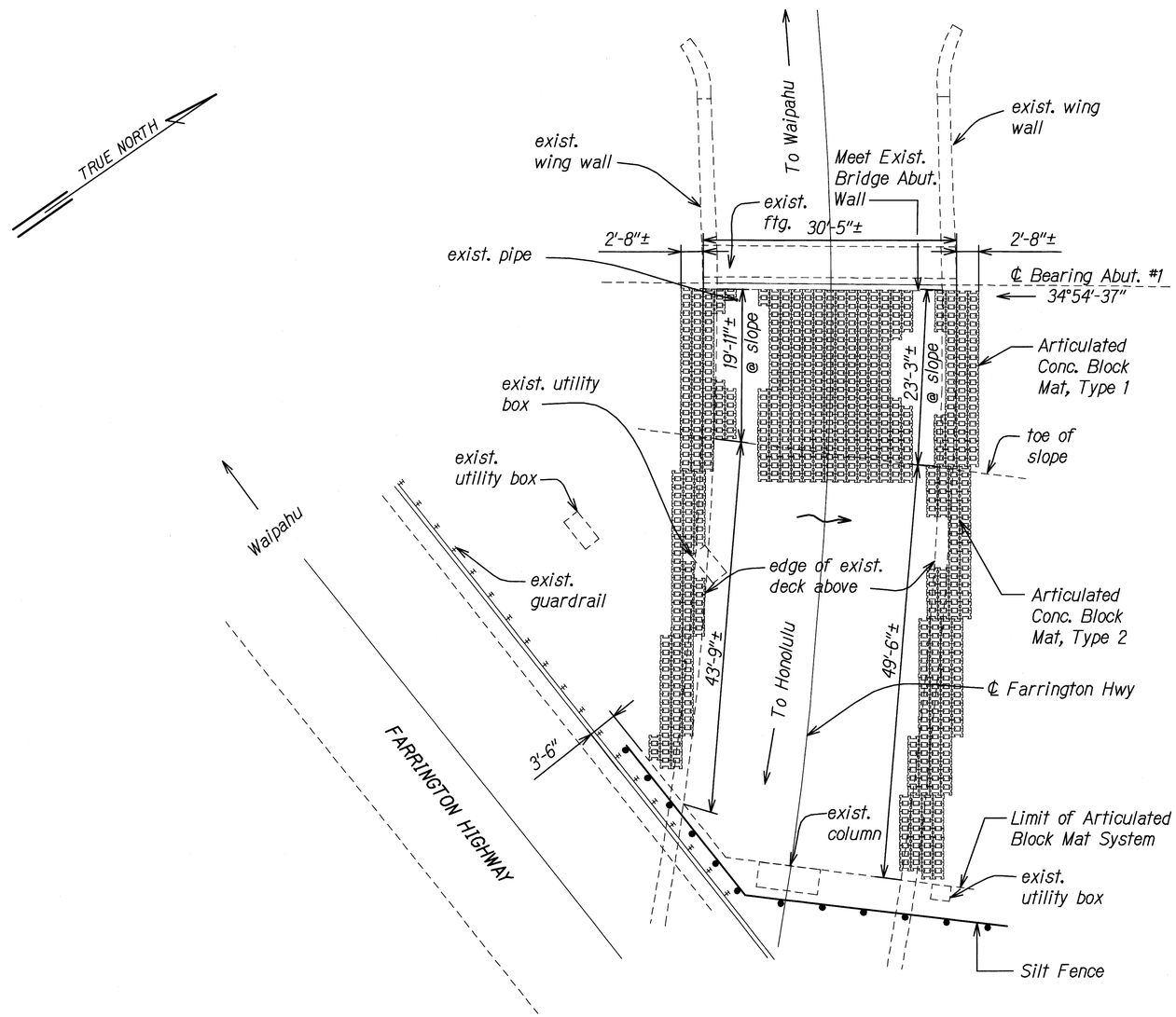

EROSION CONTROL PLAN SITE 21 - FARRINGTON HIGHWAY OVERPASS, NORTH ABUTMENT

Scale: 1/8" = 1'-0"

Estimated Area of Articulated Concrete Mat Type 1 measured along slope face: 772 SQ. FT.
Estimated Area of Articulated Concrete Mat Type 2 measured along slope face: 1,667 SQ. FT

ORIGINAL PLAN	SURVEY PLOTTED BY		DATE
	TRACED BY		
	DESIGNED BY		
NOTE BOOK	QUANTITIES BY		
No.	CHECKED BY		

ECP_SITE 21.DWG 1/12/2012 12:32 PM

LICENSED PROFESSIONAL ENGINEER NO. 9360-C JASON H. LAU HAWAII USA

4/30/12
EXP. DATE

This work was prepared by me or under my supervision.

STATE OF HAWAII
DEPARTMENT OF TRANSPORTATION
HIGHWAYS DIVISION

EROSION CONTROL PLAN SITE 21

SLOPE IMPROVEMENTS FOR EROSION CONTROL AT VARIOUS SITES ON OAHU, PHASE 5
Project No. HWY-O-01-12

Scale: 1/8" = 1' Date: April 2012

SHEET No. EC-35 OF 50 SHEETS

FED. ROAD DIST. NO.	STATE	PROJ. NO.	FISCAL YEAR	SHEET NO.	TOTAL SHEETS
HAWAII	HAW.	HWY-O-01-12	2012	57	123

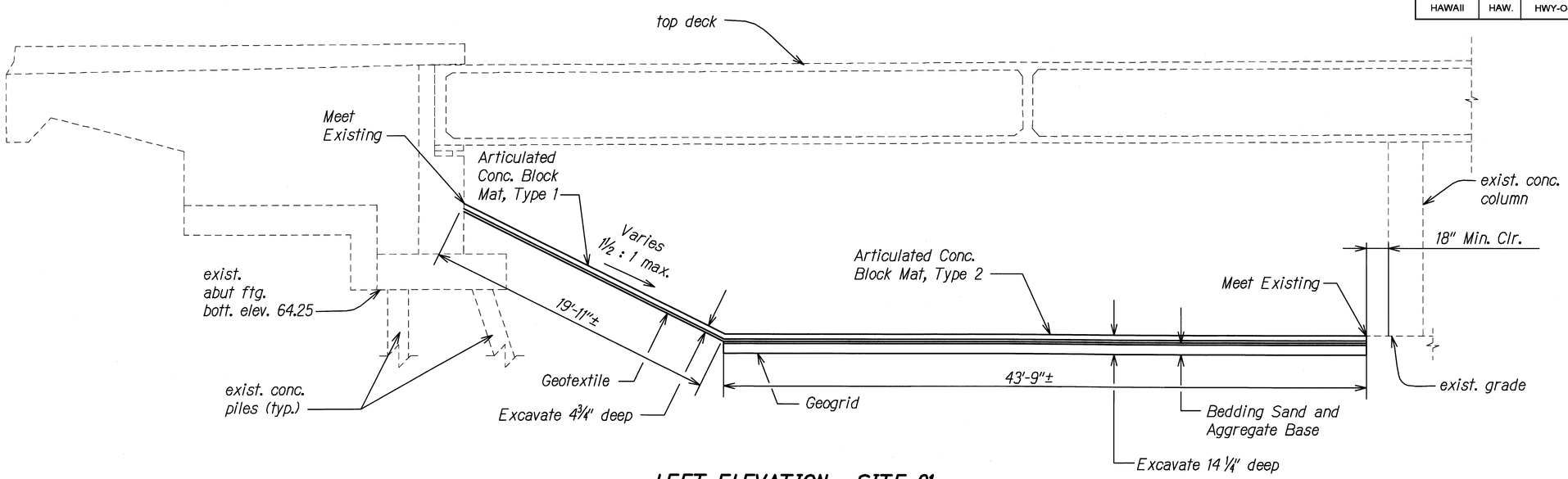

LEFT ELEVATION - SITE 21

Scale: ¼" = 1'-0"

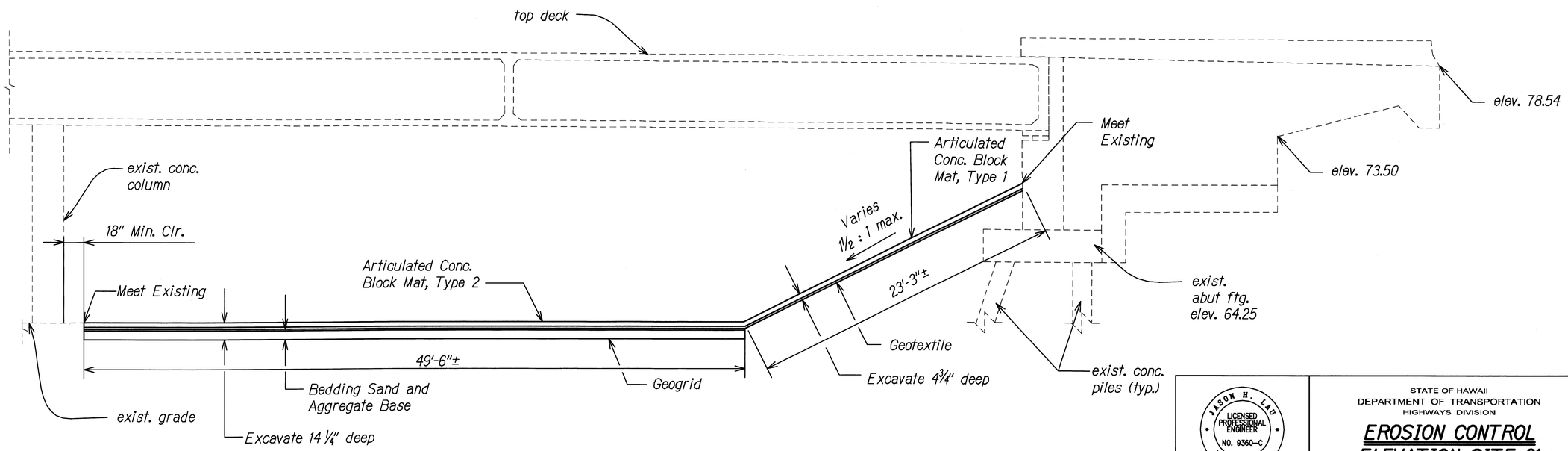

RIGHT ELEVATION - SITE 21

Scale: ¼" = 1'-0"

ORIGINAL PLAN	SURVEY PLOTTED BY	DATE
	SURVEY BY	
	TRACED BY	
NOTE BOOK	DESIGNED BY	
	QUANTITIES BY	
No.	CHECKED BY	

ECP-SITE 21.DWG 4/3/2012 8:54:50 AM

JASON H. LAU
LICENSED PROFESSIONAL ENGINEER
NO. 9360-C
HAWAII USA

4/30/12
EXP. DATE

This work was prepared by me or under my supervision.

STATE OF HAWAII
DEPARTMENT OF TRANSPORTATION
HIGHWAYS DIVISION

EROSION CONTROL ELEVATION SITE 21

SLOPE IMPROVEMENTS FOR EROSION CONTROL AT VARIOUS SITES ON OAHU, PHASE 5

Project No. HWY-O-01-12

Scale: 1/4" = 1' Date: April 2012

SHEET No. EC-36 OF 50 SHEETS

FED. ROAD DIST. NO.	STATE	PROJ. NO.	FISCAL YEAR	SHEET NO.	TOTAL SHEETS
HAWAII	HAW.	HWY-O-01-12	2012	58	123

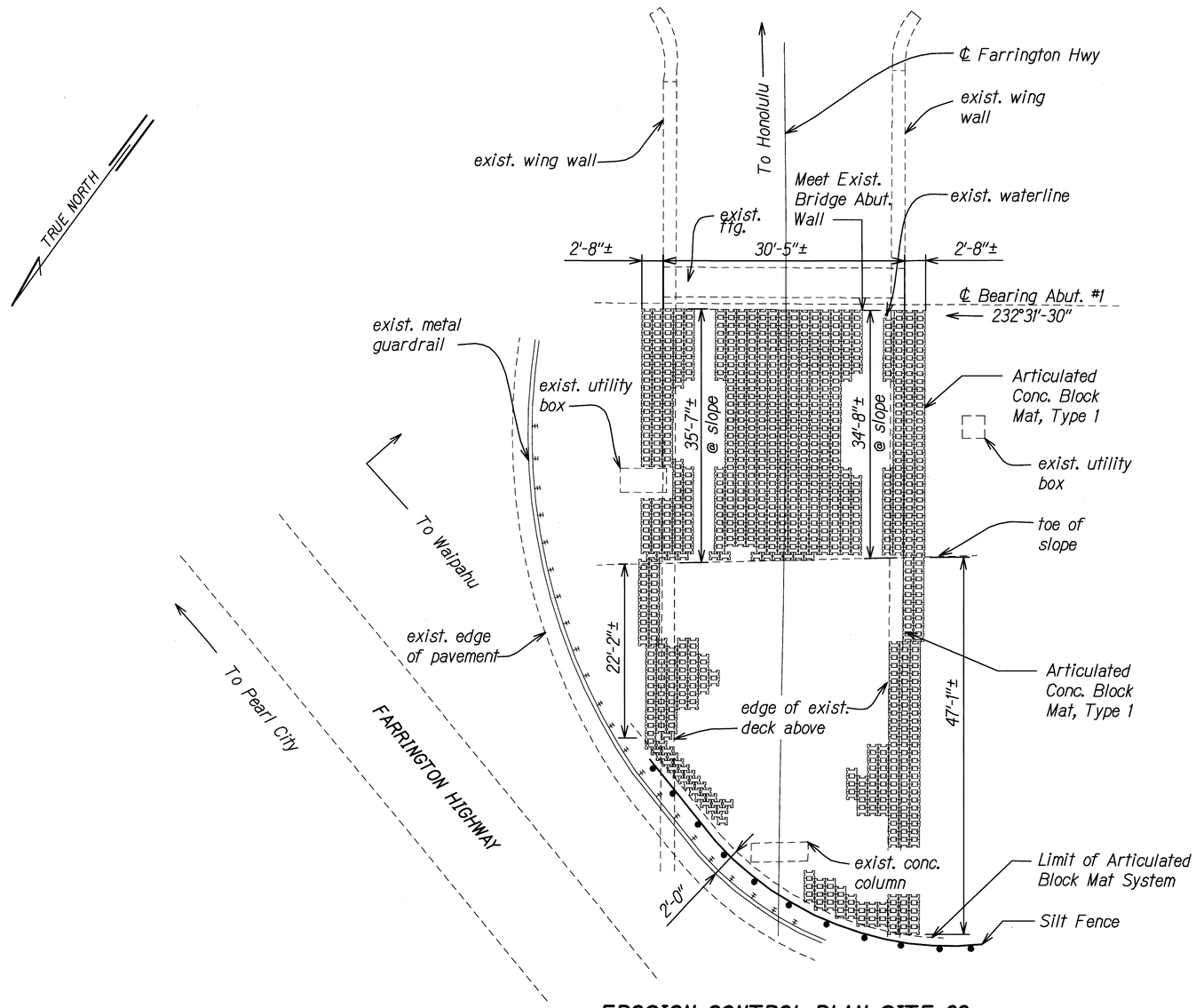

EROSION CONTROL PLAN SITE 22 - FARRINGTON HIGHWAY OVERPASS, EAST ABUTMENT

Scale: 1/8" = 1'-0"

Estimated Area of Articulated Concrete Mat Type 1 measured along slope face: 2,494 SQ. FT.

ORIGINAL PLAN	SURVEY PLOTTED BY	DATE
	DRAWN BY	
	TRACED BY	
NOTE BOOK	DESIGNED BY	
	QUANTITIES BY	
IN	CHECKED BY	

ECP_SITE 22.DWG 1/9/2012 9:20:50 AM

LICENSED PROFESSIONAL ENGINEER NO. 9360-C JASON H. LAU HAWAII USA

4/30/12
EXP. DATE

This work was prepared by me or under my supervision.

STATE OF HAWAII
DEPARTMENT OF TRANSPORTATION
HIGHWAYS DIVISION

EROSION CONTROL PLAN SITE 22

SLOPE IMPROVEMENTS FOR EROSION CONTROL AT VARIOUS SITES ON OAHU, PHASE 5
Project No. HWY-O-01-12

Scale: 1/8" = 1' Date: April 2012

SHEET No. EC-37 OF 50 SHEETS

FED. ROAD DIST. NO.	STATE	PROJ. NO.	FISCAL YEAR	SHEET NO.	TOTAL SHEETS
HAWAII	HAW.	HWY-O-01-12	2012	59	123

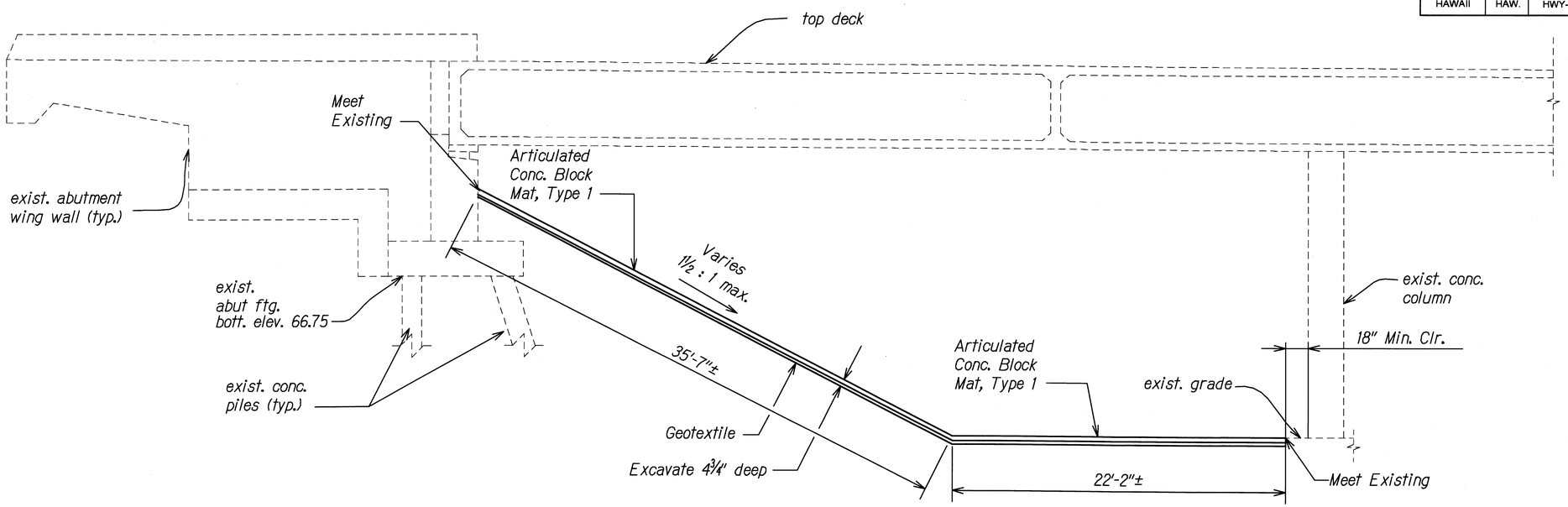

LEFT ELEVATION - SITE 22

Scale: ¼" = 1'-0"

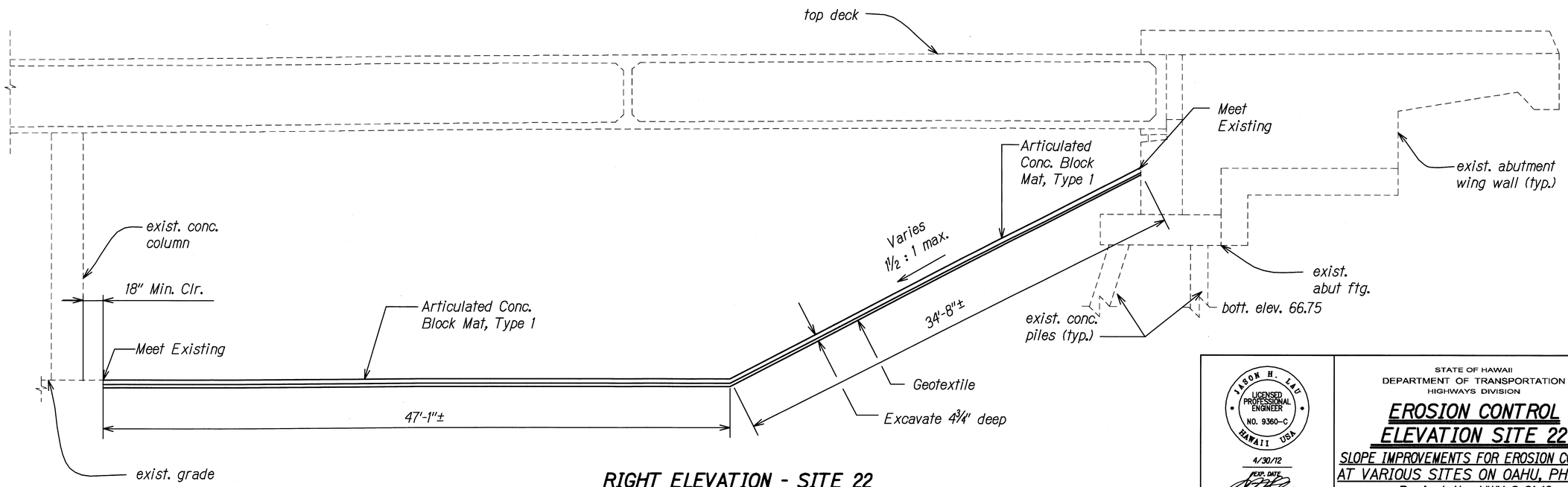

RIGHT ELEVATION - SITE 22

Scale: ¼" = 1'-0"

ORIGINAL PLAN	SURVEY PLOTTED BY	DATE
	DRAWN BY	
	TRACED BY	
NOTE BOOK	DESIGNED BY	
	QUANTITIES BY	
No.	CHECKED BY	

ECP_SITE 22.DWG 4/3/2012 8:59:19 AM

JASON H. LAU
LICENSED PROFESSIONAL ENGINEER
NO. 9360-C
HAWAII USA

4/30/12
EXP. DATE

This work was prepared by me or under my supervision.

STATE OF HAWAII
DEPARTMENT OF TRANSPORTATION
HIGHWAYS DIVISION

EROSION CONTROL ELEVATION SITE 22

SLOPE IMPROVEMENTS FOR EROSION CONTROL AT VARIOUS SITES ON OAHU, PHASE 5

Project No. HWY-O-01-12

Scale: 1/4" = 1' Date: April 2012

SHEET No. EC-38 OF 50 SHEETS

FED. ROAD DIST. NO.	STATE	PROJ. NO.	FISCAL YEAR	SHEET NO.	TOTAL SHEETS
HAWAII	HAW.	HWY-O-01-12	2012	60	123

GENERAL

1. Workmanship and materials shall conform to the Hawaii Standard Specifications for Road & Bridge Construction (2005 Edition) & Special Provisions. However, where reference is made to performance conforming to other standards the more stringent shall apply.

2. The Contractor shall compare all the contract documents with each other and report in writing to the Engineer all inconsistencies and omissions.

3. The Contractor shall take field measurements and verify field conditions and shall compare such field measurements and conditions with the drawings before commencing work. Report in writing to the Engineer all inconsistencies and omissions.

4. The Contractor shall be responsible for methods of construction, workmanship and job safety. The Contractor shall provide temporary shoring and bracing as required for stability of structural members and systems.

5. The Contractor shall be responsible for protection of the adjacent properties, structures, streets and utilities during the construction period.

6. Details noted as typical on the Structural drawings shall apply in all conditions unless specifically shown or noted.

7. The General Contractor and his subcontractors must submit in writing any requests for modifications to the plans and specifications.

DESIGN CRITERIA

1. Retaining wall design criteria
   a. Allowable foundation bearing, Dead load + Live load ——— 3000 psf
   b. Coefficient of friction ——— 0.4
   c. Active earth pressure ——— 40 pcf level backfill, 50 pcf sloping
   d. Passive earth pressure: ——— 300 pcf

FOUNDATION

A. Foundation design is based on Geotechnical Investigation by Hirata & Associates, Inc. and report dated November 7, 2011.

B. Contractor shall provide for de-watering of excavation from surface water, ground water or seepage.

C. Contractor shall provide for design and installation of all cribbing, sheeting, and shoring necessary to preserve excavations and earth banks.

D. The project site shall be cleared of all vegetation, pipe and CRM headwall debris, and other deleterious materials. in areas requiring fill placement, the exposed subgrade shall be scarified to a minimum depth of 6 inches, moisture conditioned to about 2 percent above optimum moisture content, and compacted to between 90 and 95 percent compaction as determined by ASTM D 1557.

E. Contractor shall conform to all OSHA safety standards for excavations.

FOUNDATION (CONT)

F. The onsite clayey silt will be acceptable for reuse in backfills and structural fills, except in the imported granular fill section below foundations. All rock fragments larger than 3 inches in maximum dimension should be removed from the onsite clayey silt prior to reuse.

G. Imported structural fill shall be well-graded, non expansive granular material. Specifications for imported granular fill shall indicate a maximum particle size of 3 inches, and state that between 8 and 20 percent of soil by weight shall pass the #200 sieve. In addition, the plasticity index (P.I.) of that portion of the soil passing the #40 sieve shall not be greater than 10. imported structural fill shall have a CBR expansion value no greater than 1.0 percent and a minimum CBR value of 15 percent, when tested in accordance with ASTM D 1883.

H. Cohesive soils, such as the onsite clayey silt, shall be placed in horizontal lifts restricted to 8 inches in loose thickness and compacted to between 90 and 95 percent compaction as determined by ASTM D 1557. Granular fill, such as imported granular structural fill, shall also be placed in horizontal lifts restricted to eight inches in loose thickness, but compacteed to at least 95 percent compaction as determined by ASTM D 1557.

I. Fill areas which slope steeper than 5h:1v shall be continually benched as the fill is brought up in lifts. Fill placed on slopes shall be keyed and benched into the existing slope to provide stability for the new fill against sliding. Filling the slope with sliver fills shall be avoided.

CONCRETE

1. Concrete construction workmanship & materials shall conform to the Hawaii Standard Specifications for Road & Bridge Construction (2005 Edition) & Special Provisions & the American Concrete Institute ACI 318R, whichever is more stringent.

2. Concrete shall be regular weight hard rock concrete and shall have the following minimum 28 day compressive strengths:
   a. Footings ——— 3,000 psi
   b. Walls ——— 4,000 psi
   c. All other concrete ——— 3,000 psi

3. Concrete delivery tickets shall record all free water in the mix: at batching by plant, for consistency by driver, and any additional request by contractor if permitted by the mix design.

4. All inserts, anchor bolts, plates, and other items to be cast in the concrete shall be hot-dipped galvanized unless otherwise noted.

5. Reinforcing bars, anchor bolts, inserts, and other items to be cast in the concrete shall be secured in position prior to placement of concrete.

6. The Contractor shall locate construction joints so as not to impair the strength of the structure and to minimize shrinkage stresses. Submit location of construction joints to the Engineer for approval, unless otherwise noted.

7. The Engineer shall be notified at least 3 working days prior to any concrete pour. No concrete shall be poured prior to observation by the Engineer or his representative.

REINFORCING STEEL

1. Reinforcing Steel shall be deformed bars conforming to ASTM A615, Grade 60.

2. Clear concrete cover for reinforcing bars shall be as follows, unless otherwise noted:
   a. Footings, etc. cast against earth ——— 3"
   b. Footings, etc. formed and exposed to earth or weather ——— 2"
   c. Walls
      1. Faces exposed to earth or weather
         #5 bars and smaller ——— 2"
         #6 bars and larger ——— 2"

3. Reinforcing Steel shall be spliced where indicated on plans. Provide lap splice length per typical details and schedule, unless otherwise noted.

4. Bar laps shall be made away from points of maximum stress. Unless noted otherwise, splices, laps, dowel extensions and embedments shall be 48 bar diameters, but not less than 24 inches. Splices shall be staggered where possible.

5. Unless otherwise noted, all horizontal reinforcing steel at wall and wall footing corners and intersections shall extend to the far face of the corner and hooked a length of 48 bar diameters, but not less than 24 inches, around the corner.

6. Bar bends and hooks shall be "Standard Hooks" in accordance with AASHTO LRFD Bridge Design Specifications, Second Edition, Article 5.10.2-Hooks and Bends.

SPECIAL INSPECTION

1. The Contractor shall be responsible for ensuring that special inspection of portions of the work as made at the appropriate time. The Contractor shall give timely notice of when and where inspections are to be made and provide access for the Inspector. The Contractor shall correct defective work at no additional cost to the owner.

2. The following Structural work requires Special Inspection:
   a. Concrete
   b. Reinforcing steel

ORIGINAL PLAN	SURVEY PLOTTED BY	DATE
	DRAWN BY	
	TRACED BY	
NOTE BOOK	DESIGNED BY	
	QUANTITIES BY	
N.	CHECKED BY	

X:\SDR_UTL\NG 1/4/2012 5:44:01 PM

RON E. IWAMOTO
LICENSED PROFESSIONAL ENGINEER
No. 8871-S
HAWAII, U.S.A.

4/30/14
EXP. DATE

4/12/12

This work was prepared by me or under my supervision.

STATE OF HAWAII
DEPARTMENT OF TRANSPORTATION
HIGHWAYS DIVISION

SITE 14 - STRUCTURAL NOTES

SLOPE IMPROVEMENTS FOR EROSION CONTROL AT VARIOUS SITES ON OAHU, PHASE 5
Project No. HWY-O-01-12

Scale: None Date: April 2012

SHEET No. EC-39 OF 50 SHEETS

FED. ROAD DIST. NO.	STATE	PROJ. NO.	FISCAL YEAR	SHEET NO.	TOTAL SHEETS
HAWAII	HAW.	HWY-O-01-12	2012	61	123

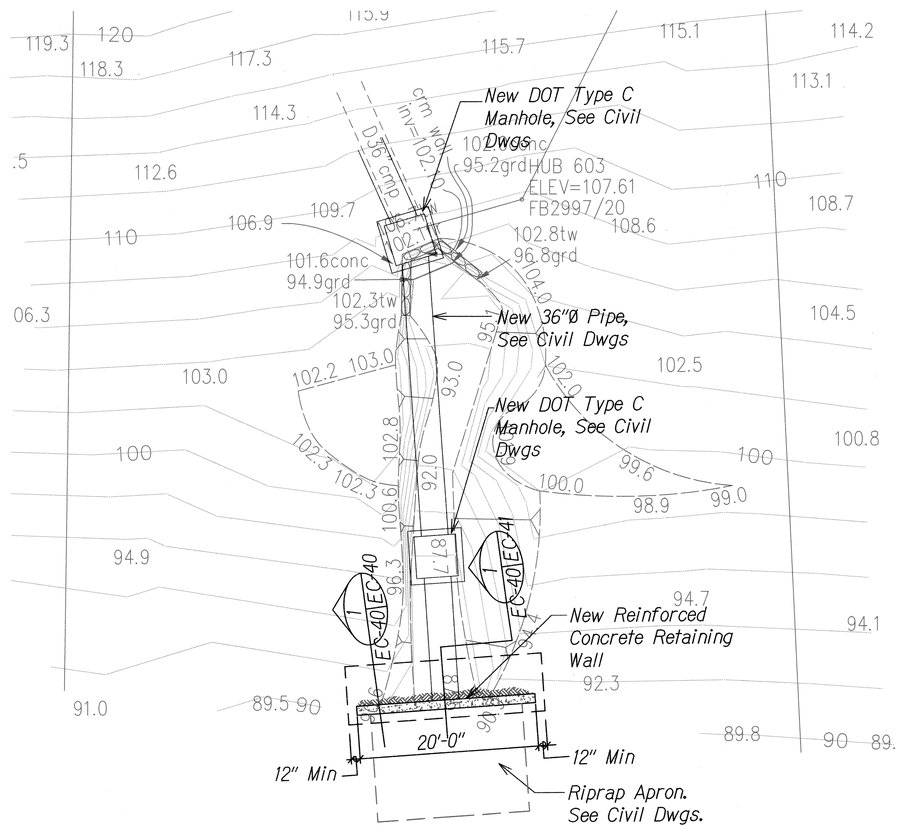

FOUNDATION PLAN

Scale: 1/8"=1'-0"

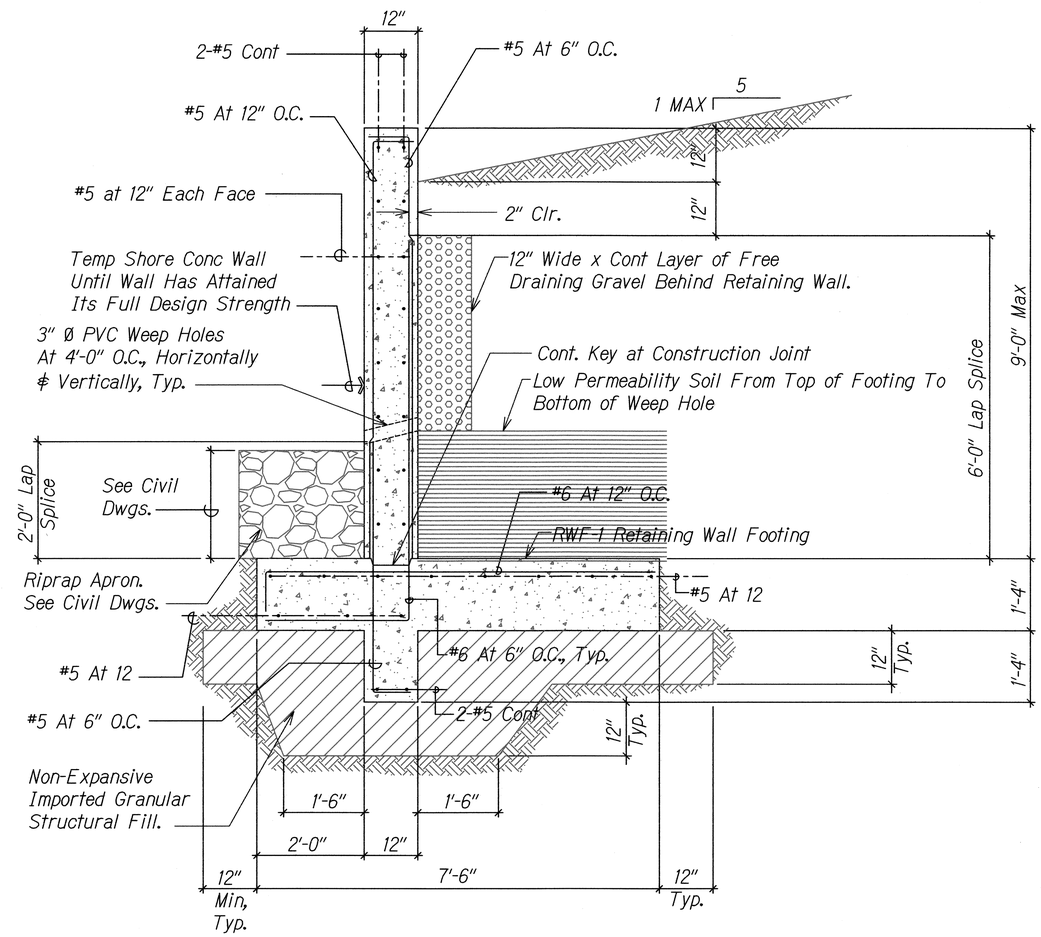

SECTION

Scale: 3/4" = 1'

ORIGINAL PLAN	SURVEY PLOTTED BY	DATE
	DRAWN BY	
	TRACED BY	
NOTE BOOK	DESIGNED BY	
	QUANTITIES BY	
N.	CHECKED BY	

X:\BDR_DT.DWG 1/4/2012 6:44:01 PM

RON E. IWAMOTO
LICENSED PROFESSIONAL ENGINEER
No. 8871-S
HAWAII, U.S.A.

4/30/14
EXP. DATE

4/13/12

This work was prepared by me or under my supervision.

STATE OF HAWAII
DEPARTMENT OF TRANSPORTATION
HIGHWAYS DIVISION

SITE 14 - STRUCTURAL PLAN & SECTION

SLOPE IMPROVEMENTS FOR EROSION CONTROL AT VARIOUS SITES ON OAHU, PHASE 5

Project No. HWY-O-01-12

Scale: As Shown Date: April 2012

SHEET No. EC-40 OF 50 SHEETS

FED. ROAD DIST. NO.	STATE	PROJ. NO.	FISCAL YEAR	SHEET NO.	TOTAL SHEETS
HAWAII	HAW.	HWY-O-01-12	2012	62	123

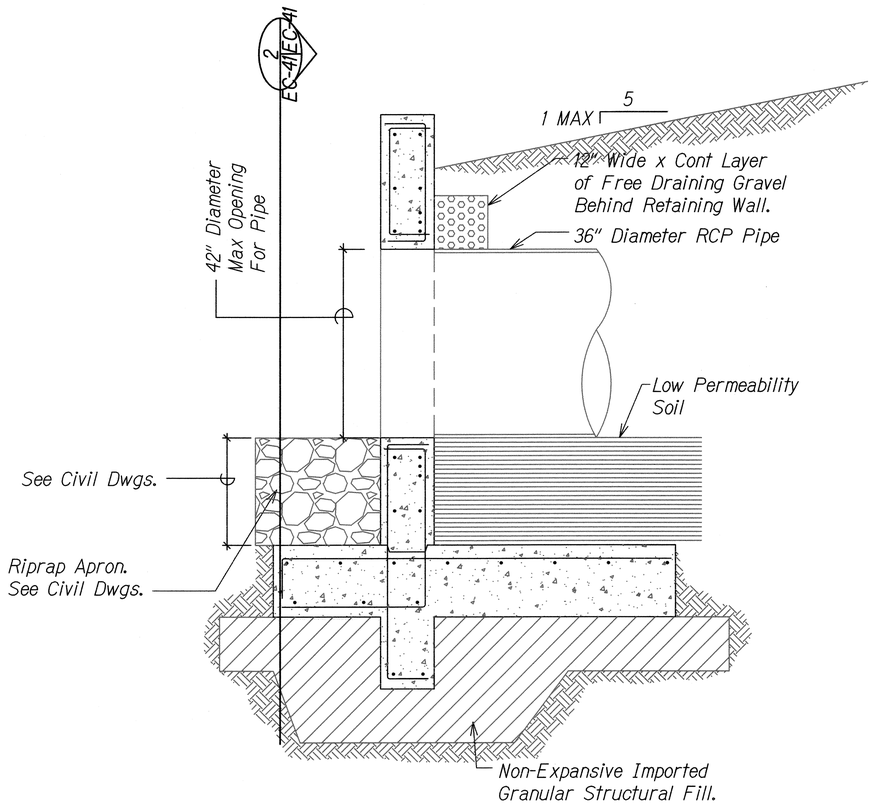

Note: See Section 1/EC-40 For Balance of Information

SECTION 1 EC-40 EC-41

Scale: 3/4" = 1'

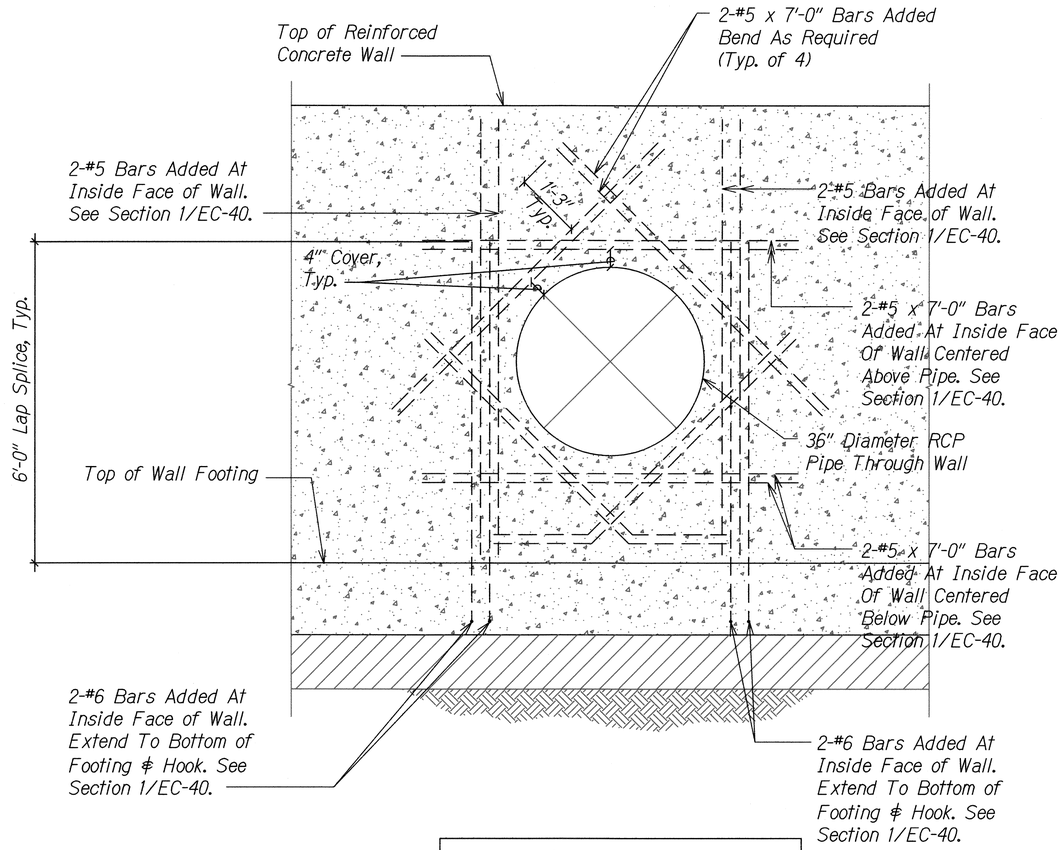

Note: Wall Reinforcing Bars Not Shown For Clarity. See Section 1/EC-40 For Typical Wall Reinforcement.

SECTION 2 EC-41 EC-41

Scale: 3/4" = 1'

ORIGINAL PLAN	SURVEY PLOTTED BY	DATE
	DRAWN BY	
	TRACED BY	
NOTE BOOK	DESIGNED BY	
	QUANTITIES BY	
N.	CHECKED BY	

X-BDR_01.DWG 1/4/2012 6:44:01 PM

RON E. IWAMOTO
LICENSED PROFESSIONAL ENGINEER
No. 8871-S
HAWAII, U.S.A.

4/30/14
EXP. DATE

4/13/12

This work was prepared by me or under my supervision.

STATE OF HAWAII
DEPARTMENT OF TRANSPORTATION
HIGHWAYS DIVISION

SITE 14 - STRUCTURAL SECTIONS

SLOPE IMPROVEMENTS FOR EROSION CONTROL AT VARIOUS SITES ON OAHU, PHASE 5
Project No. HWY-O-01-12

Scale: As Shown Date: April 2012

SHEET No. EC-41 OF 50 SHEETS

FED. ROAD DIST. NO.	STATE	PROJ. NO.	FISCAL YEAR	SHEET NO.	TOTAL SHEETS
HAWAII	HAW.	HWY-O-01-12	2012	63	123

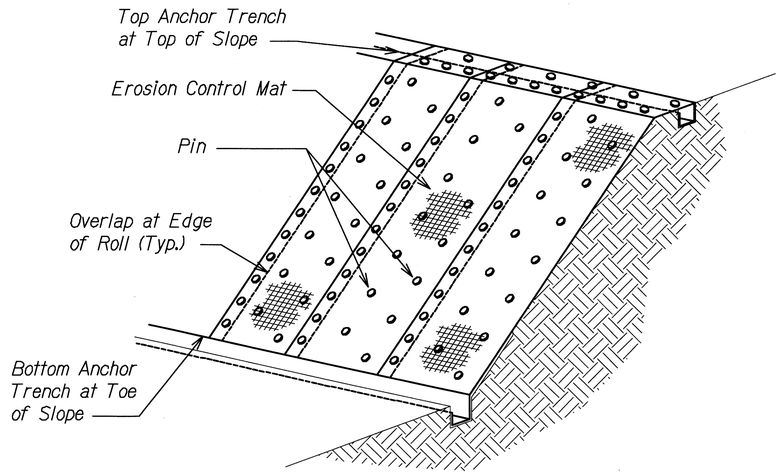

OVERVIEW OF EROSION CONTROL MATTING SYSYTEM (1)
Scale: None

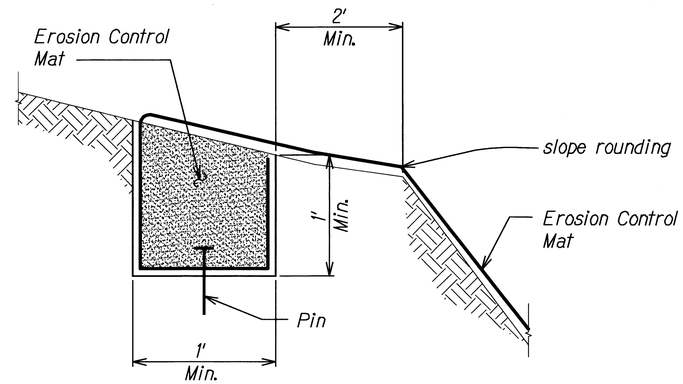

TOP ANCHOR TRENCH AT TOP OF SLOPE TRENCH DETAIL (2)
Scale: None

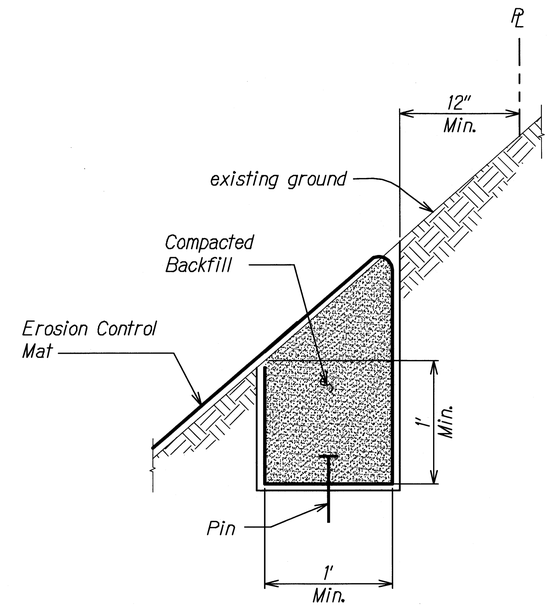

TOP ANCHOR TRENCH AT MID-SLOPE TRENCH DETAIL (3)
Scale: None

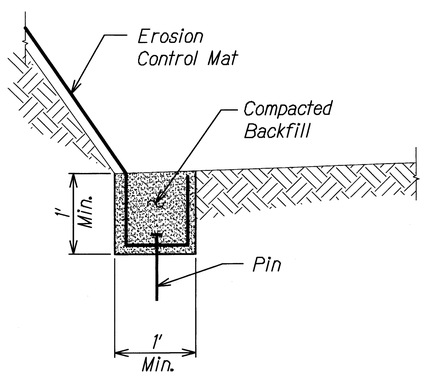

BOTTOM ANCHOR TRENCH DETAIL (4)
Scale: None

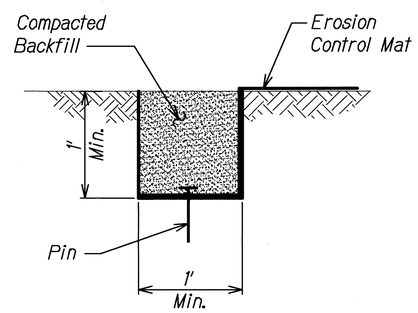

LONGITUDINAL EDGE TRENCH DETAIL (5)
Scale: None

ORIGINAL PLAN	SURVEY PLOTTED BY	DATE
	DRAWN BY	
	TRACED BY	
NOTE BOOK	DESIGNED BY	
	QUANTITIES BY	
No.	CHECKED BY	

EC-42 EROSION CONTROL MATTING DETAILS LONG 2/21/2012 3:50:41 PM

JASON H. LAU
LICENSED PROFESSIONAL ENGINEER
NO. 9360-C
HAWAII USA
4/30/12
EXP. DATE
This work was prepared by me or under my supervision.

STATE OF HAWAII
DEPARTMENT OF TRANSPORTATION
HIGHWAYS DIVISION

EROSION CONTROL MATTING DETAILS

SLOPE IMPROVEMENTS FOR EROSION CONTROL AT VARIOUS SITES ON OAHU, PHASE 5
Project No. HWY-O-01-12

Scale: None — Date: April 2012

SHEET No. EC-42 OF 50 SHEETS

FED. ROAD DIST. NO.	STATE	PROJ. NO.	FISCAL YEAR	SHEET NO.	TOTAL SHEETS
HAWAII	HAW.	HWY-O-01-12	2012	64	123

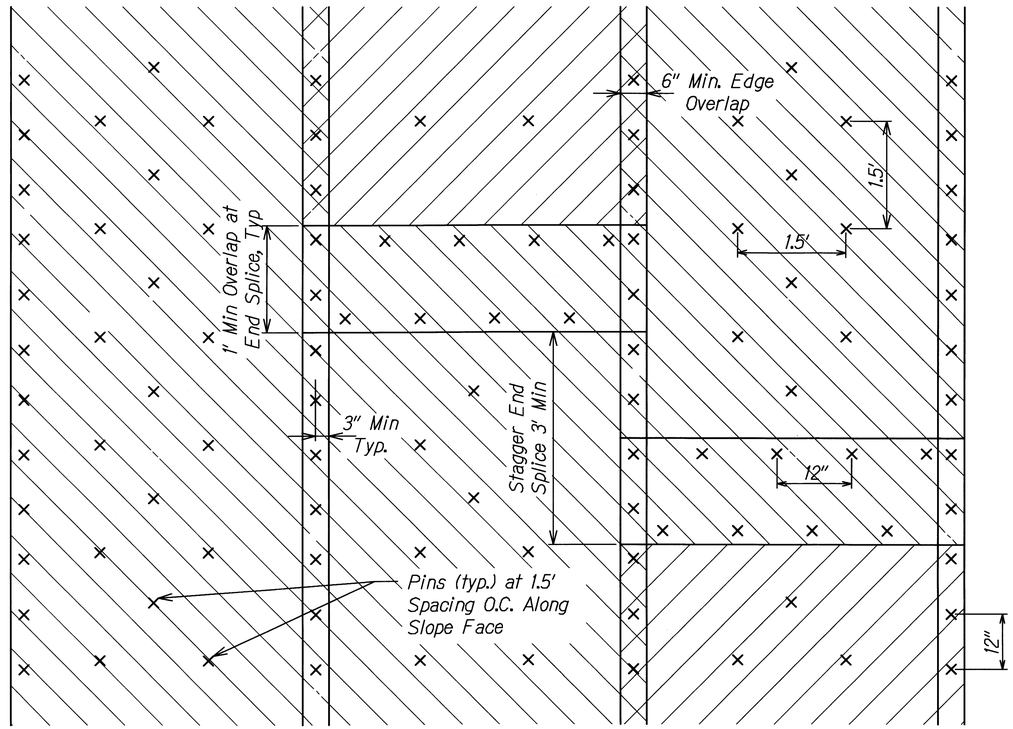

TYPICAL EROSION CONTROL MAT AND PIN LAYOUT (1)
Scale: None

Pin Spacing		
Fastener Type	Along Slope Face	Top, Bottom & Edge Trenches
Pin	1.5'	1'

Notes:
1. Secure all erosion control mat edges with pins at the spacing indicated.
2. For slopes 3H:1V or flatter, no ECM required.

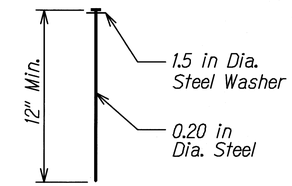

PIN DETAIL (2)
Scale: None

ORIGINAL PLAN	SURVEY PLOTTED BY	DATE
	DRAWN BY	
	TRACED BY	
NOTE BOOK	DESIGNED BY	
	QUANTITIES BY	
No.	CHECKED BY	

EC-43 EROSION CONTROL MATTING DETAILS.DWG 2/29/2012 8:25:45 AM

JASON H. LAU LICENSED PROFESSIONAL ENGINEER NO. 9360-C HAWAII USA
4/30/12
EXP. DATE
This work was prepared by me or under my supervision.

STATE OF HAWAII
DEPARTMENT OF TRANSPORTATION
HIGHWAYS DIVISION

EROSION CONTROL MATTING DETAILS

SLOPE IMPROVEMENTS FOR EROSION CONTROL AT VARIOUS SITES ON OAHU, PHASE 5
Project No. HWY-O-01-12
Scale: None Date: April 2012

SHEET No. EC-43 OF 50 SHEETS

FED. ROAD DIST. NO.	STATE	PROJ. NO.	FISCAL YEAR	SHEET NO.	TOTAL SHEETS
HAWAII	HAW.	HWY-O-01-12	2012	65	123

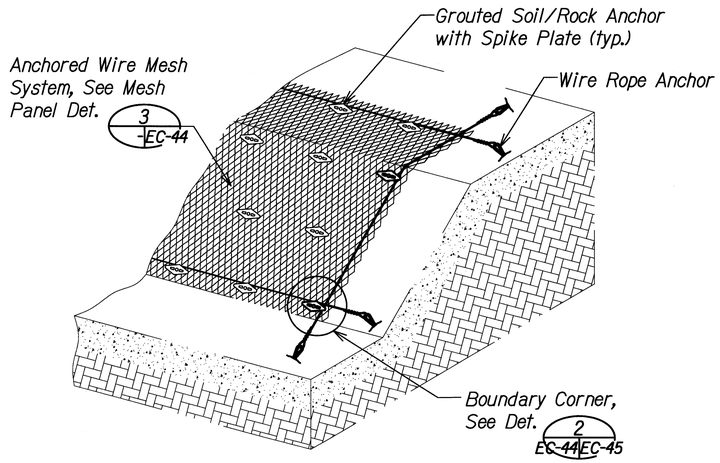

OVERALL MESH SYSTEM LAYOUT 1

Scale: None

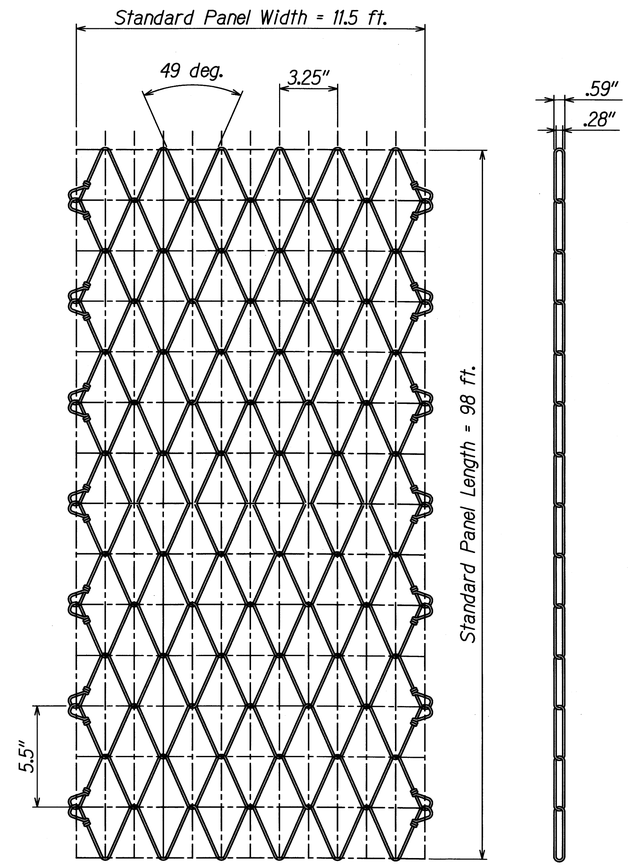

TYPICAL WIRE MESH PANEL 3

Scale: None

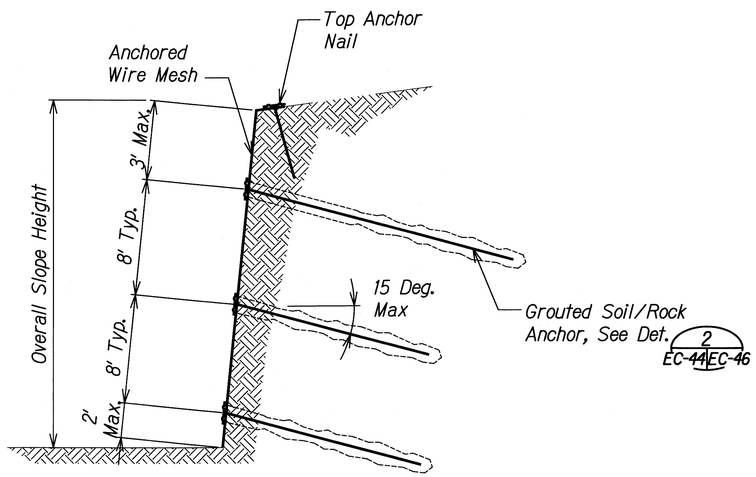

TYPICAL ANCHOR SECTION 2

Scale: None

ORIGINAL PLAN	SURVEY PLOTTED BY	DATE
	DRAWN BY	
	TRACED BY	
NOTE BOOK	DESIGNED BY	
	QUANTITIES BY	
No.	CHECKED BY	

EC-44 ANCHOR WIRE MESH DETAILS.DWG 4/5/2012 10:26:07 AM

JASON H. LAU LICENSED PROFESSIONAL ENGINEER NO. 9360-C HAWAII USA

4/30/12

EXP. DATE

This work was prepared by me or under my supervision.

STATE OF HAWAII
DEPARTMENT OF TRANSPORTATION
HIGHWAYS DIVISION

ANCHORED WIRE MESH DETAILS

SLOPE IMPROVEMENTS FOR EROSION CONTROL AT VARIOUS SITES ON OAHU, PHASE 5

Project No. HWY-O-01-12

Scale: None Date: April 2012

SHEET No. EC-44 OF 50 SHEETS

FED. ROAD DIST. NO.	STATE	PROJ. NO.	FISCAL YEAR	SHEET NO.	TOTAL SHEETS
HAWAII	HAW.	HWY-O-01-12	2012	66	123

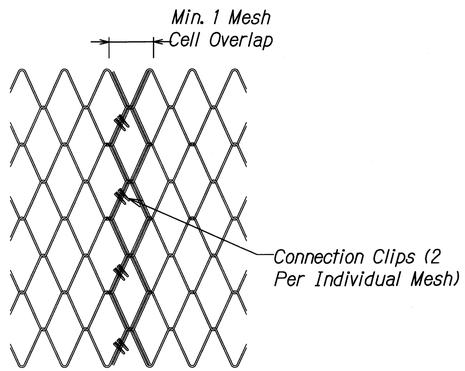

VERTICAL SPLICING
WITH OVERLAP

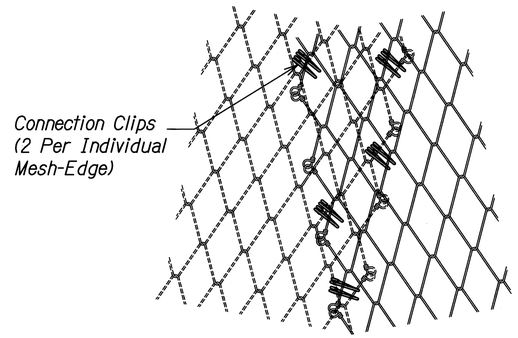

SKEWED SPLICING

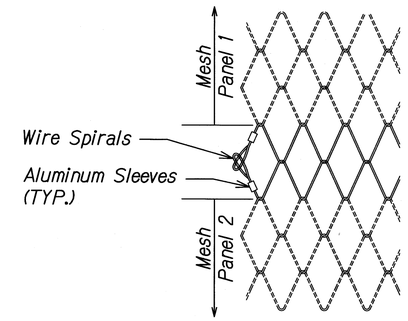

HORIZONTAL SPLICING

WIRE MESH CONNECTION DETAILS (1)
Scale: None

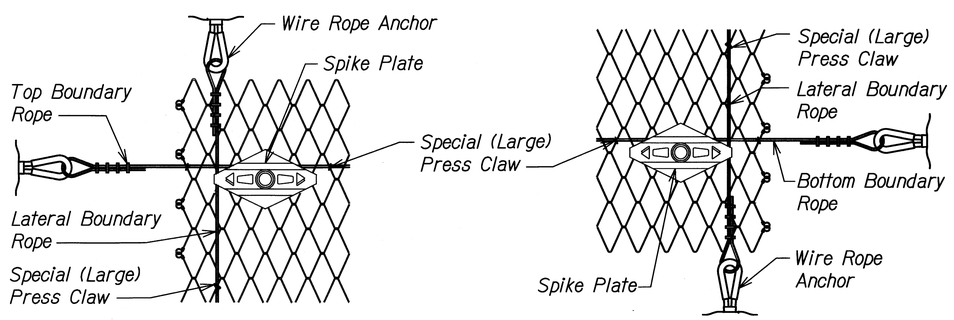

BOUNDARY ROPE AT CORNER DETAILS (2)
Scale: None

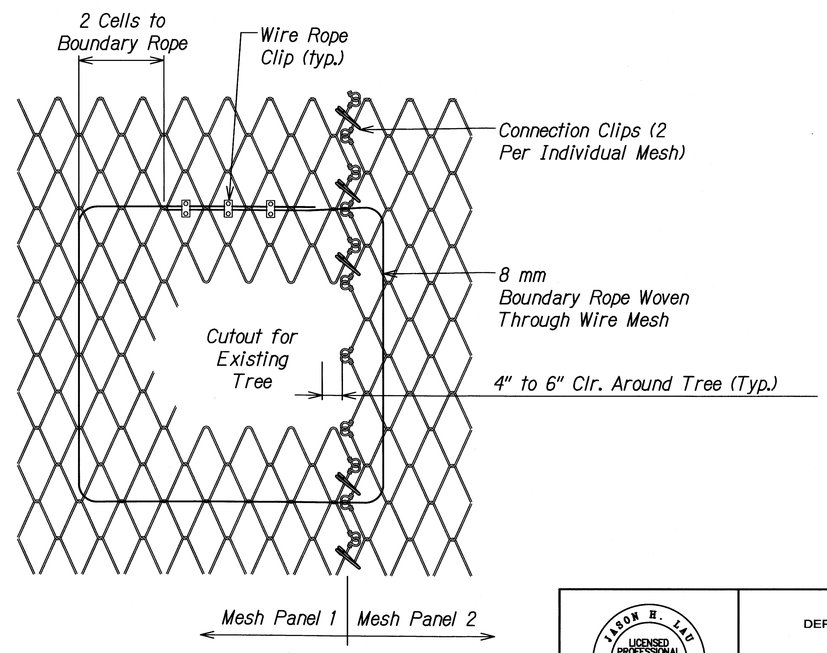

TREE CUTOUT DETAIL (3)
Scale: None

JASON H. YAO
LICENSED PROFESSIONAL ENGINEER
NO. 9360-C
HAWAII USA
4/30/12
EXP. DATE
This work was prepared by me or under my supervision.

STATE OF HAWAII
DEPARTMENT OF TRANSPORTATION
HIGHWAYS DIVISION

ANCHORED WIRE MESH DETAILS

SLOPE IMPROVEMENTS FOR EROSION CONTROL AT VARIOUS SITES ON OAHU, PHASE 5
Project No. HWY-O-01-12
Scale: None Date: April 2012

SHEET No. EC-45 OF 50 SHEETS

ORIGINAL PLAN | SURVEY PLOTTED BY | DRAWN BY | TRACED BY | DESIGNED BY | QUANTITIES BY | CHECKED BY | DATE
NOTE BOOK No.

EC-45 ANCHOR WIRE MESH DETAILS 2.DWG 4/5/2012 9:43:37 AM

FED. ROAD DIST. NO.	STATE	PROJ. NO.	FISCAL YEAR	SHEET NO.	TOTAL SHEETS
HAWAII	HAW.	HWY-O-01-12	2012	67	123

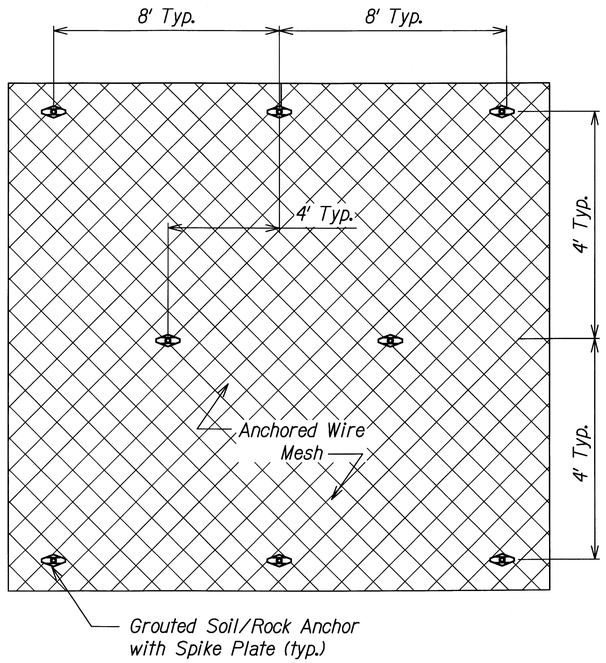

TYPICAL ANCHOR SPACING (1)
Scale: None

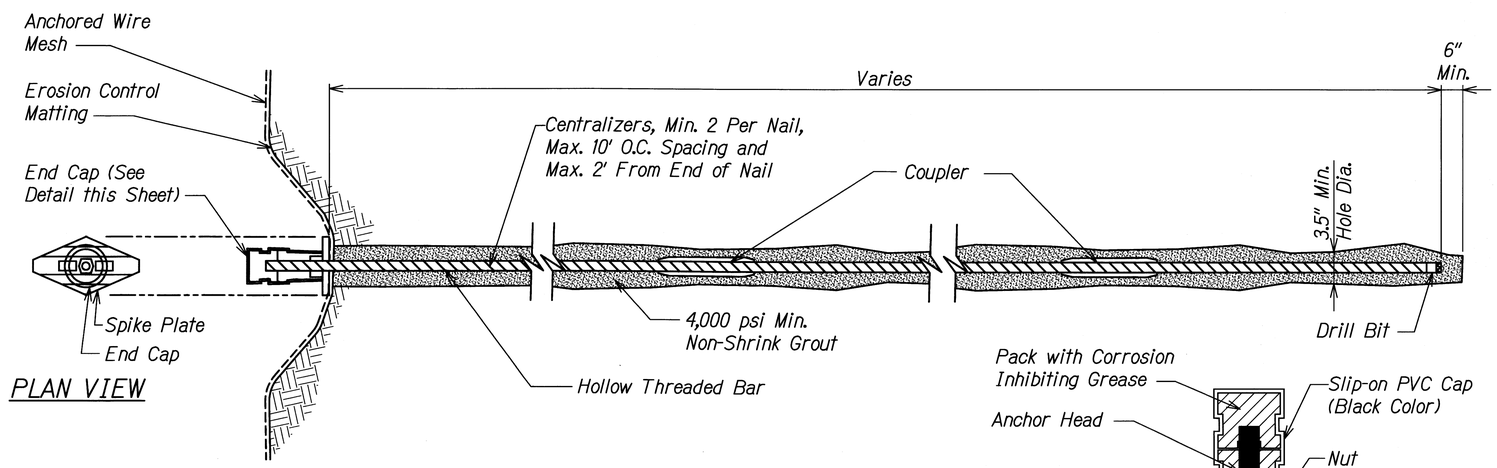

PLAN VIEW

GROUTED SOIL/ROCK ANCHOR DETAIL (2)
Scale: None

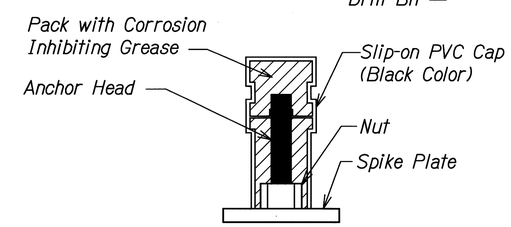

END CAP ELEVATION

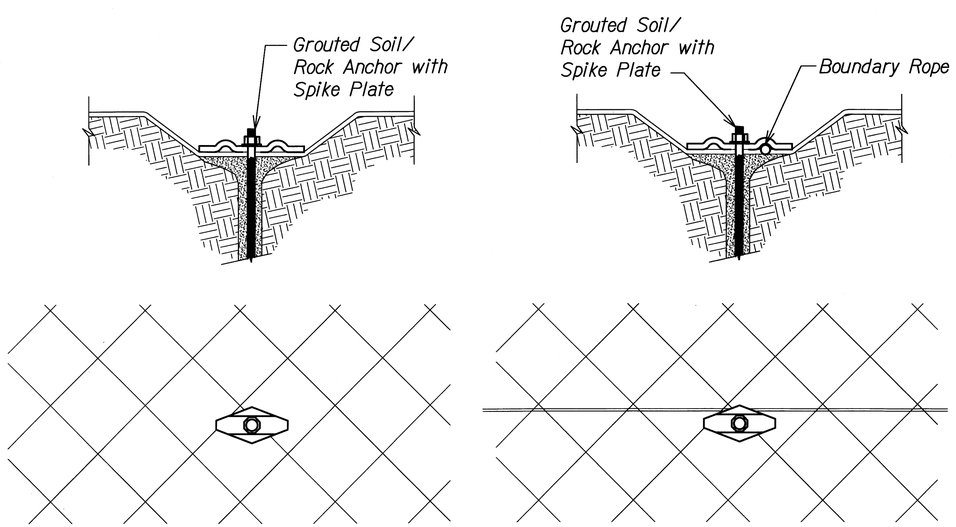

MAIN NAIL

MAIN NAIL WITH BOUNDARY ROPE

SOIL/ROCK ANCHOR AND SPIKE PLATE WITH VERTICAL BOUNDARY ROPE

NAIL AND ANCHOR DETAILS (3)
Scale: None

ORIGINAL PLAN	SURVEY PLOTTED BY	DATE
	DRAWN BY	
	TRACED BY	
NOTE BOOK	DESIGNED BY	
	QUANTITIES BY	
No.	CHECKED BY	

EC-46 ANCHOR WIRE MESH DETAILS.DGN 4/5/2012 10:33 AM

JASON H. LAU
LICENSED PROFESSIONAL ENGINEER
NO. 9360-C
HAWAII USA
4/30/12
EXP. DATE
This work was prepared by me or under my supervision.

STATE OF HAWAII
DEPARTMENT OF TRANSPORTATION
HIGHWAYS DIVISION

ANCHORED WIRE MESH DETAILS

SLOPE IMPROVEMENTS FOR EROSION CONTROL AT VARIOUS SITES ON OAHU, PHASE 5
Project No. HWY-O-01-12

Scale: None
Date: April 2012

SHEET No. EC-46 OF 50 SHEETS

FED. ROAD DIST. NO.	STATE	PROJ. NO.	FISCAL YEAR	SHEET NO.	TOTAL SHEETS
HAWAII	HAW.	HWY-O-01-12	2012	68	123

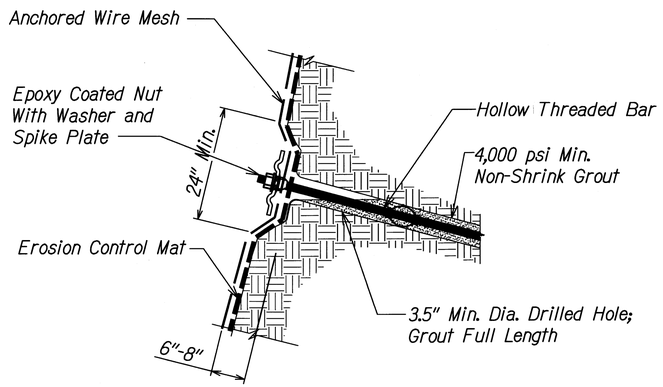

DELL ALONG SLOPE

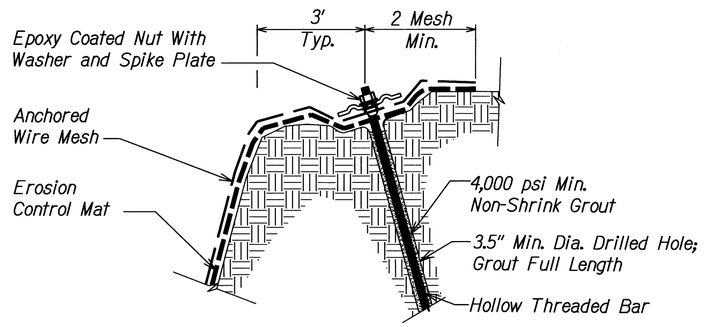

DELL AT TOP EDGE

TYPICAL DELL DETAILS (1)
Scale: None

ORIGINAL PLAN	SURVEY PLOTTED BY	DATE
	DRAWN BY	
	TRACED BY	
NOTE BOOK	DESIGNED BY	
	QUANTITIES BY	
N.	CHECKED BY	

EC-47 ANCHOR WIRE MESH DETAILS.DGN 4/5/2012 11:30:10 AM

JASON H. LAU
LICENSED PROFESSIONAL ENGINEER
NO. 9360-C
HAWAII USA
4/30/12
EXP. DATE
This work was prepared by me or under my supervision.

STATE OF HAWAII
DEPARTMENT OF TRANSPORTATION
HIGHWAYS DIVISION

ANCHORED WIRE MESH DETAILS

SLOPE IMPROVEMENTS FOR EROSION CONTROL AT VARIOUS SITES ON OAHU, PHASE 5
Project No. HWY-O-01-12

Scale: None
Date: April 2012

SHEET No. EC-47 OF 50 SHEETS

FED. ROAD DIST. NO.	STATE	PROJ. NO.	FISCAL YEAR	SHEET NO.	TOTAL SHEETS
HAWAII	HAW.	HWY-O-01-12	2012	69	123

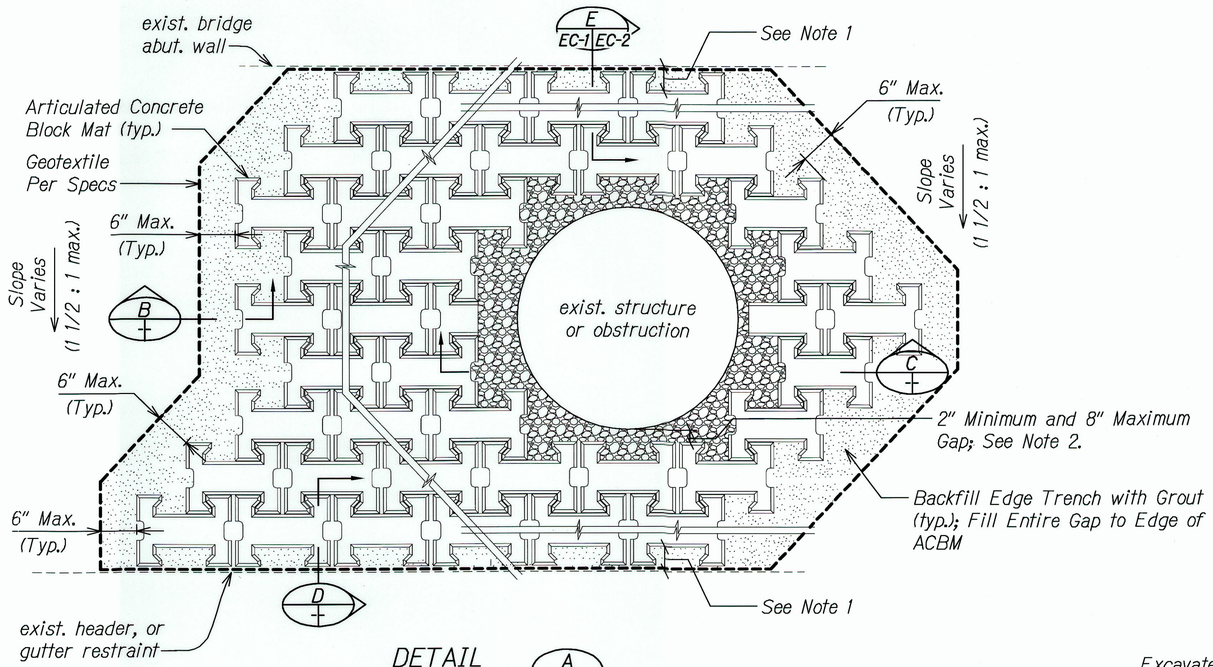

DETAIL A
Scale: None
(View Normal to Slope Face)

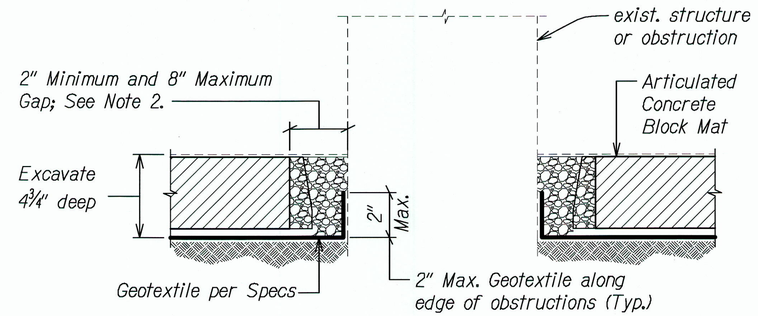

SECTION AT OBSTRUCTIONS C
Scale: None

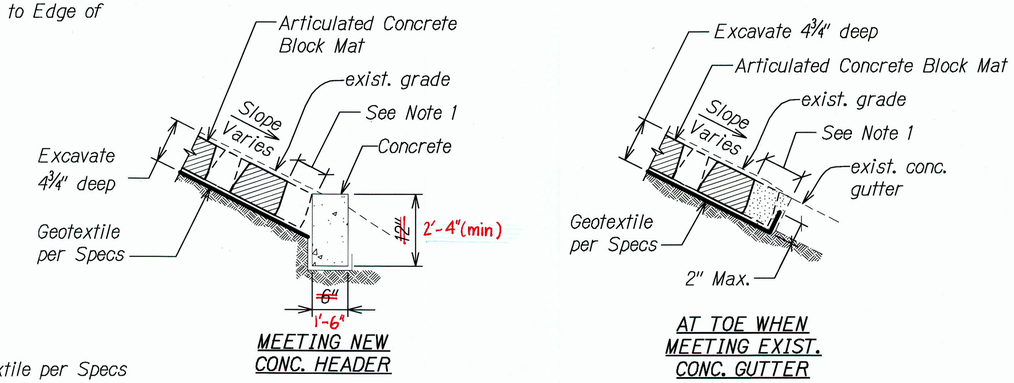

TYPICAL SECTION D
Scale: None

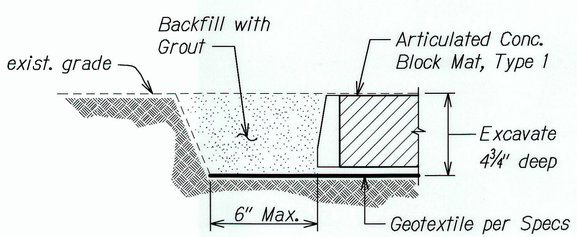

ACBM TYPE 1

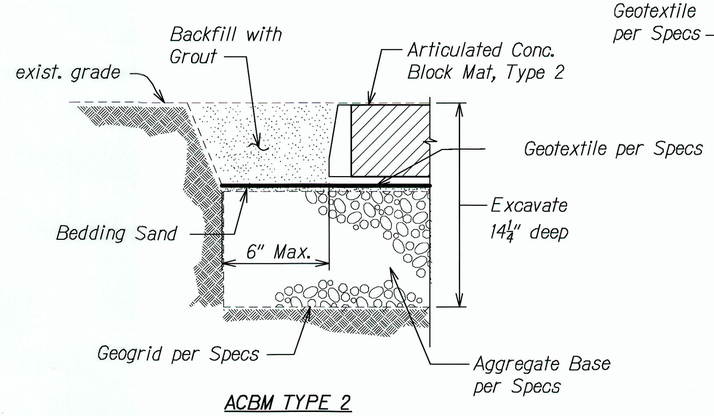

ACBM TYPE 2

SECTION TO MEET EXISTING GRADE B
Scale: None

Notes:
1. Grout all gaps at peak and toe of ACBM.
2. ACBM blocks may be sawcut to meet the space requirements. The remaining open areas shall be filled with uncompacted 3B Fine aggregate material and made flush with the top of the ACBMs as indicated in the Specifications.

JASON H. LAU LICENSED PROFESSIONAL ENGINEER NO. 9360-C HAWAII USA
4/30/12
EXP. DATE
This work was prepared by me or under my supervision.

STATE OF HAWAII
DEPARTMENT OF TRANSPORTATION
HIGHWAYS DIVISION

ARTICULATED CONCRETE BLOCK MAT DETAILS

SLOPE IMPROVEMENTS FOR EROSION CONTROL AT VARIOUS SITES ON OAHU, PHASE 5
Project No. HWY-O-01-12
Scale: None Date: April 2012

SHEET No. EC-48 OF 50 SHEETS

ORIGINAL PLAN | SURVEY PLOTTED BY | DRAWN BY | TRACED BY | DESIGNED BY | QUANTITIES BY | CHECKED BY | DATE
NOTE BOOK | No.
ACBM DETAILS.DWG 2/10/2012 10:30:10 AM

"AS-BUILT"

FED. ROAD DIST. NO.	STATE	PROJ. NO.	FISCAL YEAR	SHEET NO.	TOTAL SHEETS
HAWAII	HAW.	HWY-O-01-12	2012	70	123

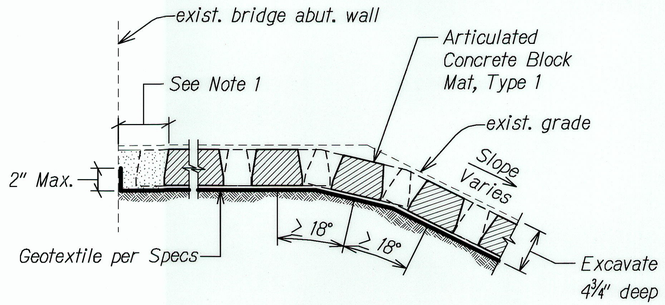

AT PEAK ON LOCATIONS WITH A GRADE BREAK

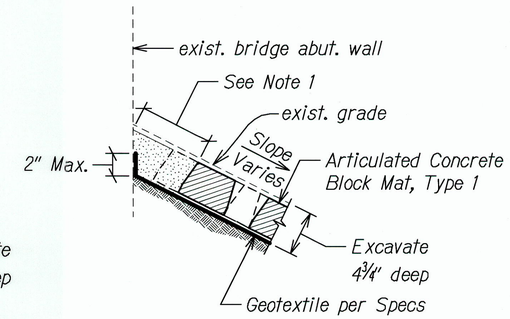

AT PEAK WITH A CONSTANT SLOPE

TYPICAL SECTION (E)
Scale: None

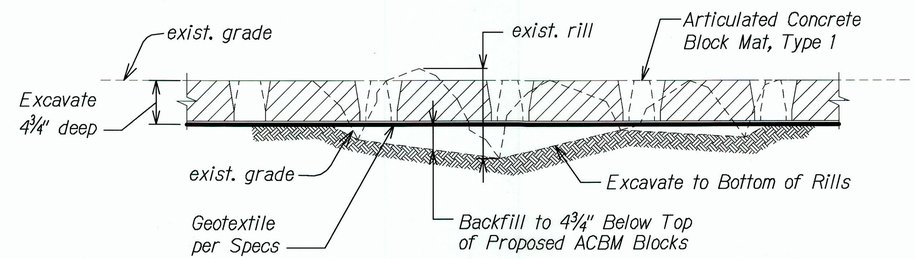

TYPICAL LONGITUDINAL VIEW OF RILLS (F)
Scale: None

NOTES:

1. Grout all gaps at peak and toe of ACBM.

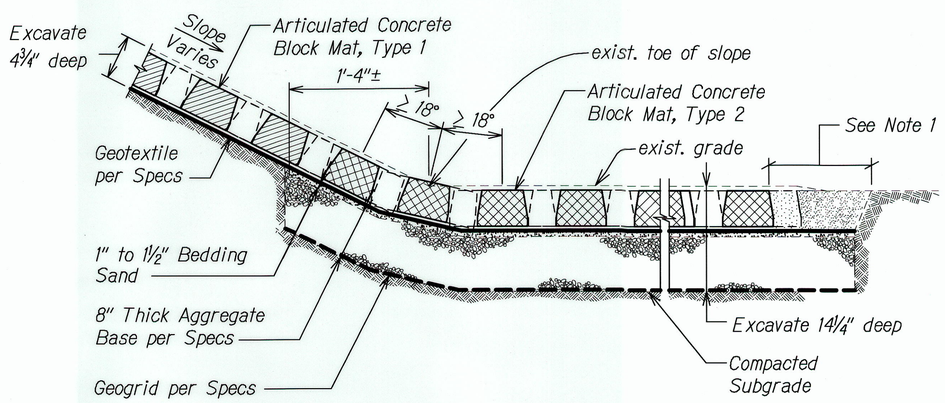

SECTION (G)
Scale: None

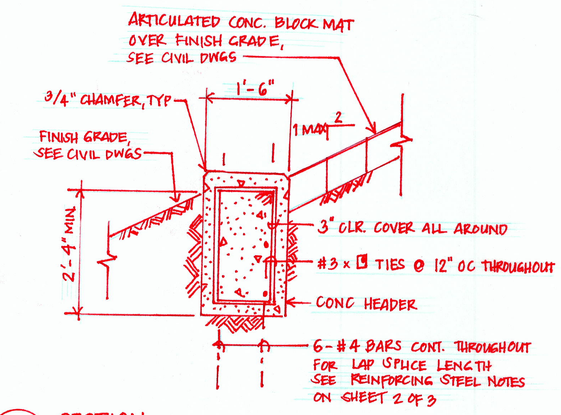

(A) SECTION
Scale: None

FIELD CHANGE NO. 1
REVISED CONCRETE HEADERS AT SITE 18 AND 19

ORIGINAL PLAN | SURVEY PLOTTED BY | DRAWN BY | TRACED BY | DESIGNED BY | QUANTITIES BY | CHECKED BY | DATE
NOTE BOOK No.

ACBM DETAILS.DWG 1/4/2012 4:40:44 PM

JASON H. LAU
LICENSED PROFESSIONAL ENGINEER
NO. 9360-C
HAWAII USA
4/30/12
EXP. DATE
This work was prepared by me or under my supervision.

STATE OF HAWAII
DEPARTMENT OF TRANSPORTATION
HIGHWAYS DIVISION

ARTICULATED CONCRETE BLOCK MAT DETAILS

SLOPE IMPROVEMENTS FOR EROSION CONTROL AT VARIOUS SITES ON OAHU, PHASE 5
Project No. HWY-O-01-12

Scale: None | Date: April 2012

SHEET No. EC-49 OF 50 SHEETS

"AS-BUILT"