FED. ROAD DIST. NO.	STATE	FED. AID PROJ. NO.	FISCAL YEAR	SHEET NO.	TOTAL SHEETS
HAWAII	HAW.	STP-0300(66)	1998	1	

ELECTRICAL SYMBOLS

- EXISTING STREET LIGHT ON WOOD POLE
- REMOVE EXISTING STREET LIGHT LUMINAIRE & BRACKET ARM
- EXISTING STREET LIGHT ON CONCRETE BASE
- REMOVE EXISTING STREET LIGHT POLE. DEMOLISH CONCRETE BASE 24" BELOW FINISH GRADE
- NEW 250W HPS STREET LIGHT STANDARD & CONCRETE BASE, SEE DET A/E3
- SL — NEW 2" PVC CONDUIT
- SL - - EXISTING CONDUIT TO BE REUSED, REPLACE EXISTING CONDUCTORS WITH 2#8 RHW-USE & 1#8 GROUND
- (1) DENOTES REFERENCE TO MATERIAL LIST ITEM No. SEE SHEET E11 FOR LISTING

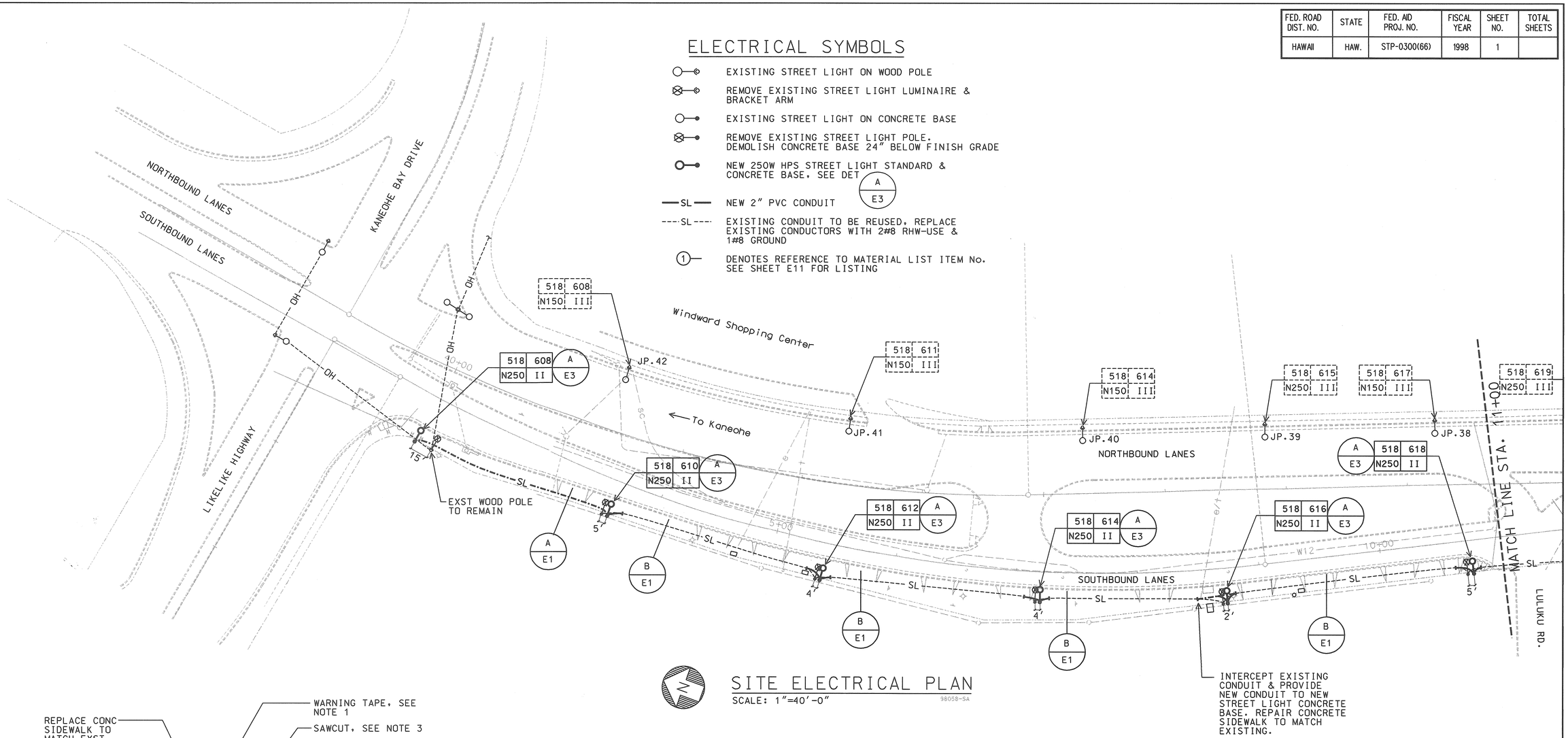

SITE ELECTRICAL PLAN

SCALE: 1"=40'-0"

98058-SA

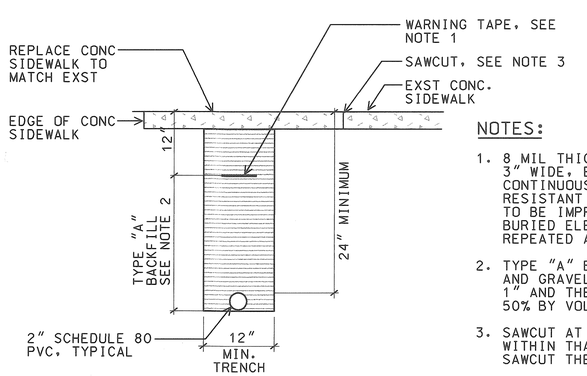

NOTES:

1. 8 MIL THICK RED COLORED PLASTIC WARNING TAPE 3" WIDE, ENTIRE LENGTH OF DUCT. TAPE TO HAVE CONTINUOUS METALLIC BACKING AND CORROSION RESISTANT FOIL CORE. WARNING AND IDENTIFICATION TO BE IMPRINTED ON TAPE AND SHALL READ "CAUTION BURIED ELECTRIC CABLE BELOW". MESSAGE SHALL BE REPEATED APPROXIMATELY EVERY TEN FEET.
2. TYPE "A" BACKFILL: BEACH SAND, EARTH OR EARTH AND GRAVEL USED, THE MAXIMUM ROCK SIZE SHALL BE 1" AND THE MIXTURE SHALL CONTAIN NOT MORE THAN 50% BY VOLUME OF ROCK PARTICLES.
3. SAWCUT AT SCORE JOINT. REPLACE CONCRETE SIDEWALK WITHIN THAT AREA. IF SCORE LINE IS LESS THAN 12", SAWCUT THE NEXT CONCRETE SLAB.

A/E1 DIRECT BURIED CONDUIT (UNDER CONC. SIDEWALK)

NTS

98058LDE

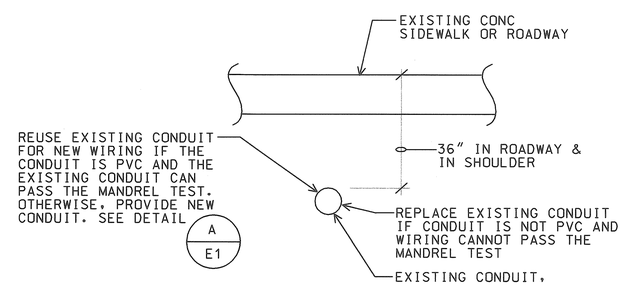

B/E1 EXISTING DUCT SECTION

NTS

98058-08

AS-BUILT
2/4/03
DATE

DATE	REV	DESCRIPTION
8/16/99	1	REV. WARNING TAPE

STATE OF HAWAII
DEPARTMENT OF TRANSPORTATION
HIGHWAYS DIVISION

SITE ELECTRICAL PLAN

HIGHWAY LIGHTING SAFETY IMPROVEMENTS
KAMEHAMEHA HIGHWAY VICINITY OF
LIKELIKE HIGHWAY/KANEOHE BAY DRIVE INTERSECTION
TO UALANI PLACE
FEDERAL AID PROJ. NO. STP-0300(66)

SCALE: AS NOTED DATE: DECEMBER 1998

R.C. KATAHARA
LICENSED PROFESSIONAL ENGINEER
No. 3181-E
11/25/98
HAWAII, U.S.A.

THIS WORK WAS PREPARED BY ME OR UNDER MY SUPERVISION.
R.C. Katahara 11/25/98
MK ENGINEERS, LTD.

SHEET No. E1 OF 56 SHEETS

CO-E1

Rev. DWG 11/25/98

FED. ROAD DIST. NO.	STATE	FED. AID PROJ. NO.	FISCAL YEAR	SHEET NO.	TOTAL SHEETS
HAWAII	HAW.	STP-0300(66)	1998	2	

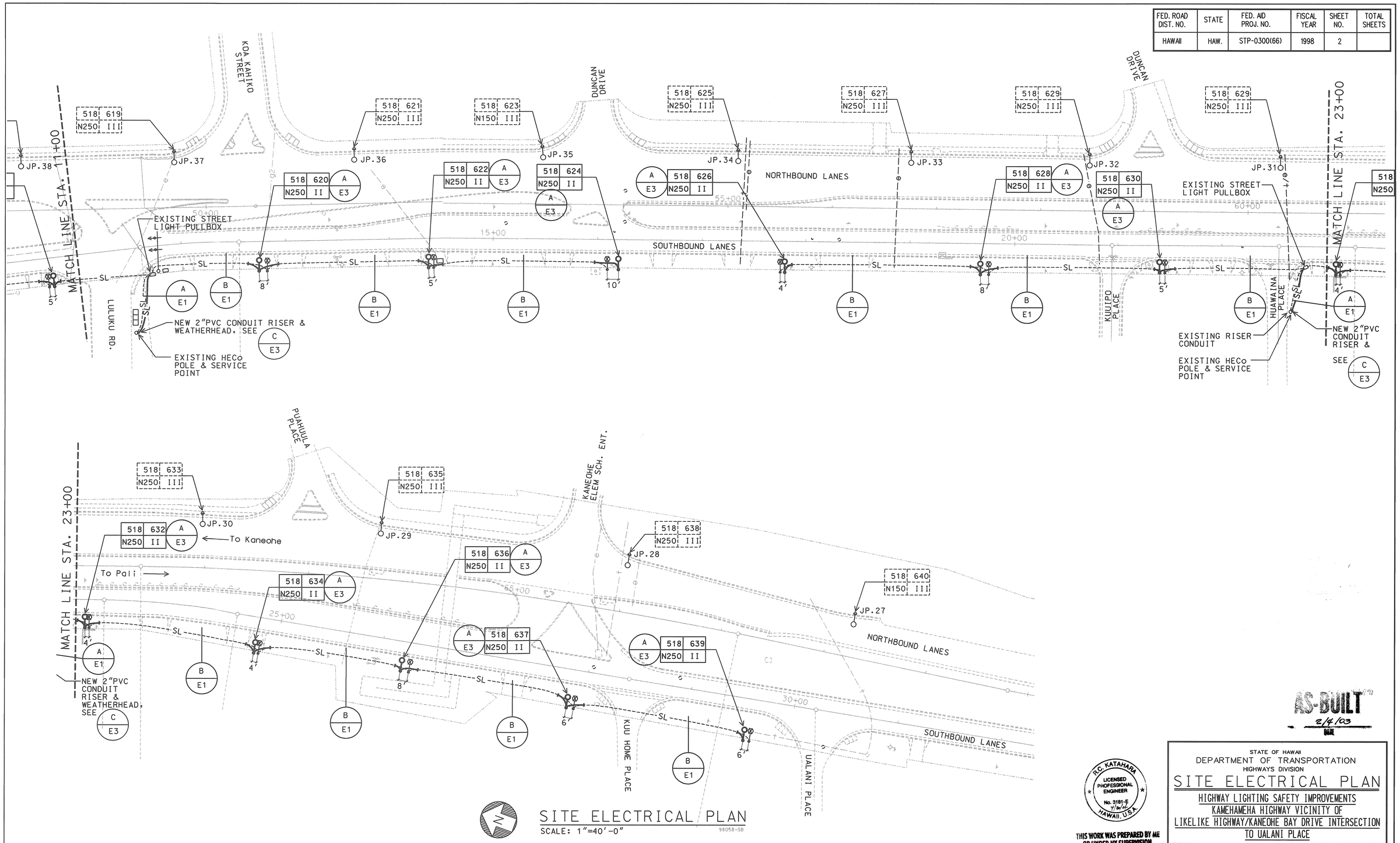

SITE ELECTRICAL PLAN

SCALE: 1"=40'-0"

98058-SB

AS-BUILT
2/4/03
MK

R.C. KATAHARA
LICENSED PROFESSIONAL ENGINEER
No. 3181-E
HAWAII, U.S.A.

THIS WORK WAS PREPARED BY ME OR UNDER MY SUPERVISION.
RC Katahara 11/25/98
MK ENGINEERS, LTD.

STATE OF HAWAII
DEPARTMENT OF TRANSPORTATION
HIGHWAYS DIVISION

SITE ELECTRICAL PLAN

HIGHWAY LIGHTING SAFETY IMPROVEMENTS
KAMEHAMEHA HIGHWAY VICINITY OF
LIKELIKE HIGHWAY/KANEOHE BAY DRIVE INTERSECTION
TO UALANI PLACE
FEDERAL AID PROJ. NO. STP-0300(66)

SCALE: AS NOTED DATE: DECEMBER 1998

SHEET No. E2 OF 56 SHEETS

FED. ROAD DIST. NO.	STATE	FED. AID PROJ. NO.	FISCAL YEAR	SHEET NO.	TOTAL SHEETS
HAWAII	HAW.	STP-0300(66)	1998	3	

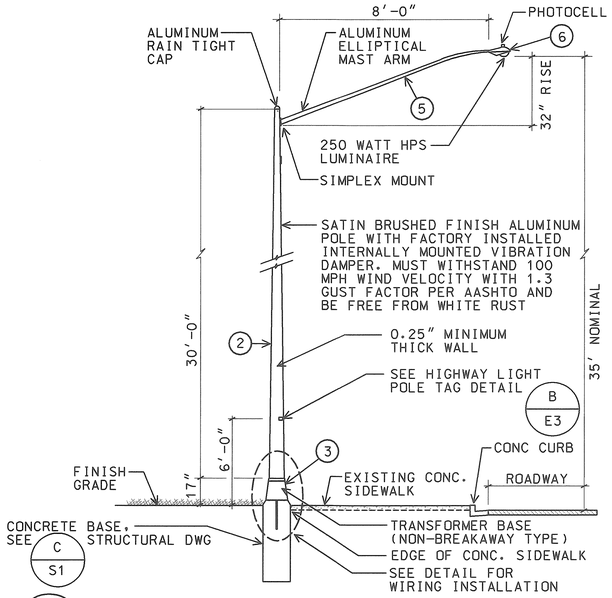

A E3 TYPICAL STREET LIGHT STANDARD INSTALLATION WITH TRANSFORMER BASE

NTS

98058-D4

98058D11

MATERIAL LIST

ITEM	DESCRIPTION	MANUFACTURER
1	LIGHT POLE, 28', ALUM	LEXINGTON 2708-45808T4
2	LIGHT POLE, 30', ALUM	LEXINGTON 2908-45808T4
3	TRANSFORMER BASE (ALUM)	LEXINGTON 08R1012S17
4	MAST ARM, 6', ALUM, SINGLE/DOUBLE SIMPLEX MOUNT	LEXINGTON 2MA0632S
5	MAST ARM, 8', ALUM, SINGLE SIMPLEX MOUNT	LEXINGTON 1MA0832S
6	LUMINAIRE, 250W HPS	GENERAL ELECTRIC M4RR-25-S-5-M-1-G-MS2

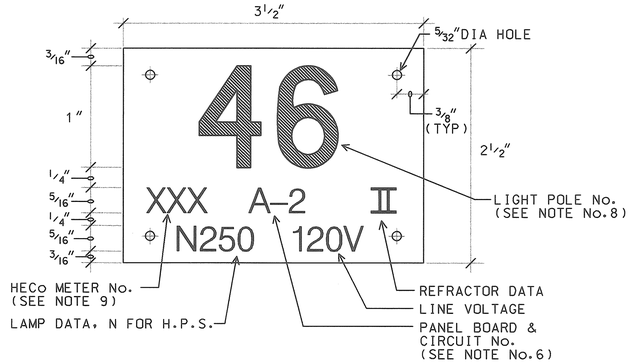

B E3 HIGHWAY LIGHT POLE TAG DETAIL

NTS

98058LDM

NOTES:

1. USE 3 PLY LAMINATED FLEXIBLE PLASTIC BLACK-WHITE-BLACK THICKNESS BLACK CAP SHEET-0.010", WHITE BASE SHEET-0.052", BLACK BASE SHEET-0.010".
2. LIGHT POLE NUMBER SIZE SHALL BE 1" HIGH AND ENGRAVED 1/8" WIDE, WHITE IN COLOR (NUMBER AS REQUIRED).
3. NOMENCLATURE SIZE SHALL BE 5/16" HIGH AND ENGRAVED 1/32" WIDE, WHITE IN COLOR (HECo VAULT NUMBER PANEL BOARD AND CIRCUIT NUMBER, LINE VOLTAGE, LAMP DATA AND REFRACTOR DATA AS REQUIRED.
4. ATTACH TO ALUMINUM AND STEEL POST WITH No. 8 STAINLESS STEEL, 1/2" LONG DRIVE SCREWS IN 1/8" DRILL HOLE. ATTACH TO WOOD POLES WITH 4D ALUMINUM NAIL.
5. NUMBERS ARE INSCRIBED BY CUTTING THROUGH "BLACK CAP SHEET" TO EXPOSE "WHITE LETTERS."
6. NOMENCLATURE REQUIRED FOR SYSTEMS WITH TWO OR MORE CIRCUITS (LETTER INDICATES PANEL BOARD, NUMBER INDICATES CIRCUIT).
7. FOR LIGHT POLES INSTALLED ON RAMP, ASSIGN NUMBERS TO INCLUDE RAMP I.D. AND LIGHT NUMBER. LEGEND MAY BE LESS THAN ONE (1) INCH IN HEIGHT.
8. LIGHT NUMBERS SHALL BE OBTAINED FROM THE STATE. USE AN ALPHABET SUFFIX TO DESIGNATE LIGHTS MOUNTED ON THE SAME POLE (e.g. 123A & 123B).
9. FOR NON-METERED SYSTEM, CALL OUT THE CONTRACT NUMBER.

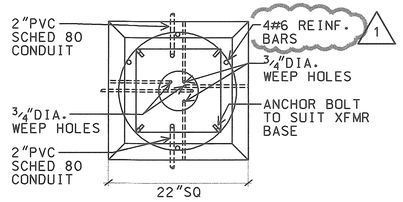

PLAN

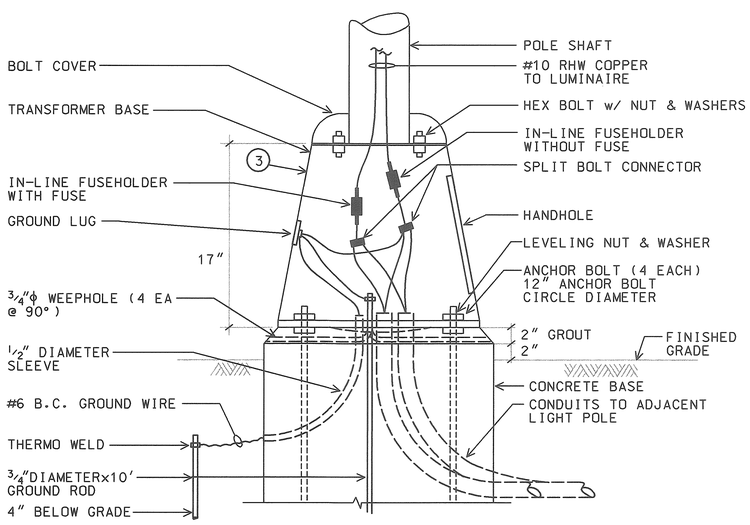

TYPICAL TRANSFORMER BASE WIRING DETAIL

NTS

98058-D5

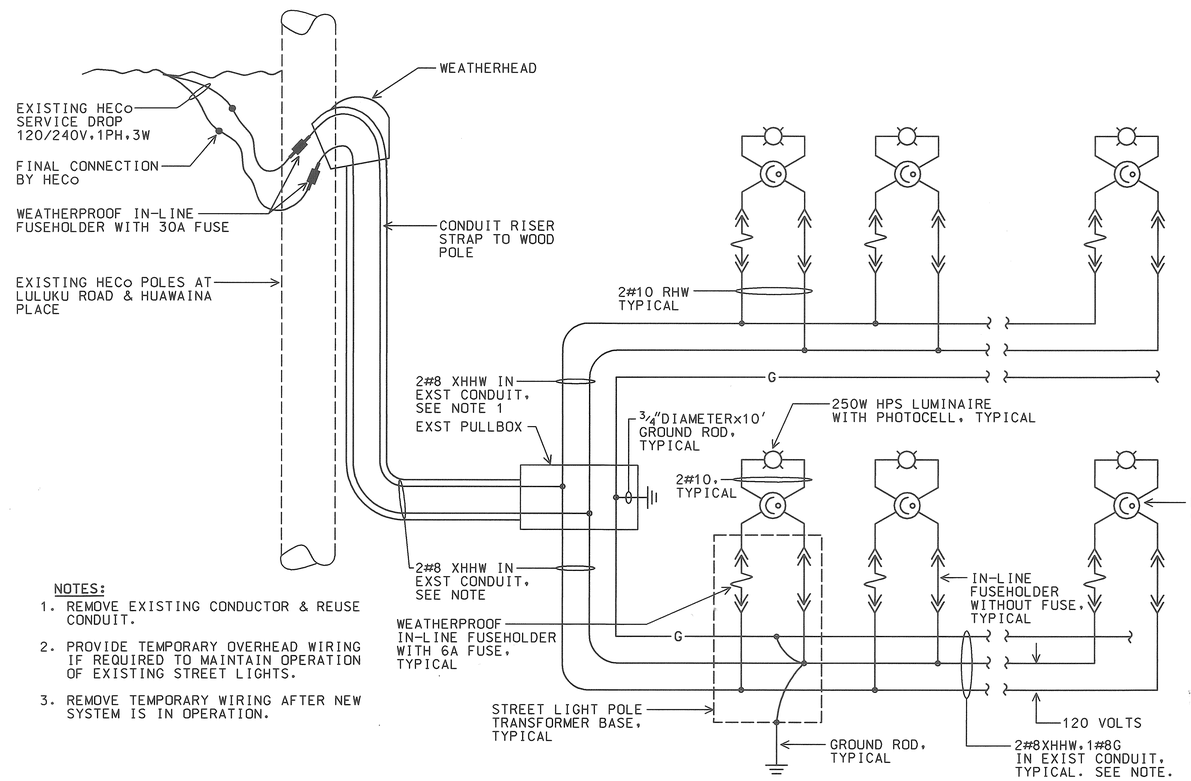

NOTES:

1. REMOVE EXISTING CONDUCTOR & REUSE CONDUIT.
2. PROVIDE TEMPORARY OVERHEAD WIRING IF REQUIRED TO MAINTAIN OPERATION OF EXISTING STREET LIGHTS.
3. REMOVE TEMPORARY WIRING AFTER NEW SYSTEM IS IN OPERATION.

C E3 STREET LIGHT WIRING DIAGRAM, TYPICAL

NTS

98058-D6

AS-BUILT
2/4/03
DATE

R.C. KATAHARA
LICENSED PROFESSIONAL ENGINEER
No. 3181-E
HAWAII, U.S.A.

THIS WORK WAS PREPARED BY ME OR UNDER MY SUPERVISION.
1/23/98
MK ENGINEERS, LTD.

DATE	REV.	DESCRIPTION
8/16/99	1	REV. REINF BAR SIZE

STATE OF HAWAII
DEPARTMENT OF TRANSPORTATION
HIGHWAYS DIVISION

STREET LIGHT DETAIL

HIGHWAY LIGHTING SAFETY IMPROVEMENTS
KAMEHAMEHA HIGHWAY VICINITY OF
LIKELIKE HIGHWAY/KANEOHE BAY DRIVE INTERSECTION
TO UALANI PLACE

FEDERAL AID PROJ. NO. STP-0300(66)

SCALE: AS NOTED DATE: DECEMBER 1998

SHEET No. E3 OF 56 SHEETS

C0-E3

FED. ROAD DIST. NO.	STATE	FED. AID PROJ. NO.	FISCAL YEAR	SHEET NO.	TOTAL SHEETS
HAWAII	HAW.	STP-0300(66)	1998	4	

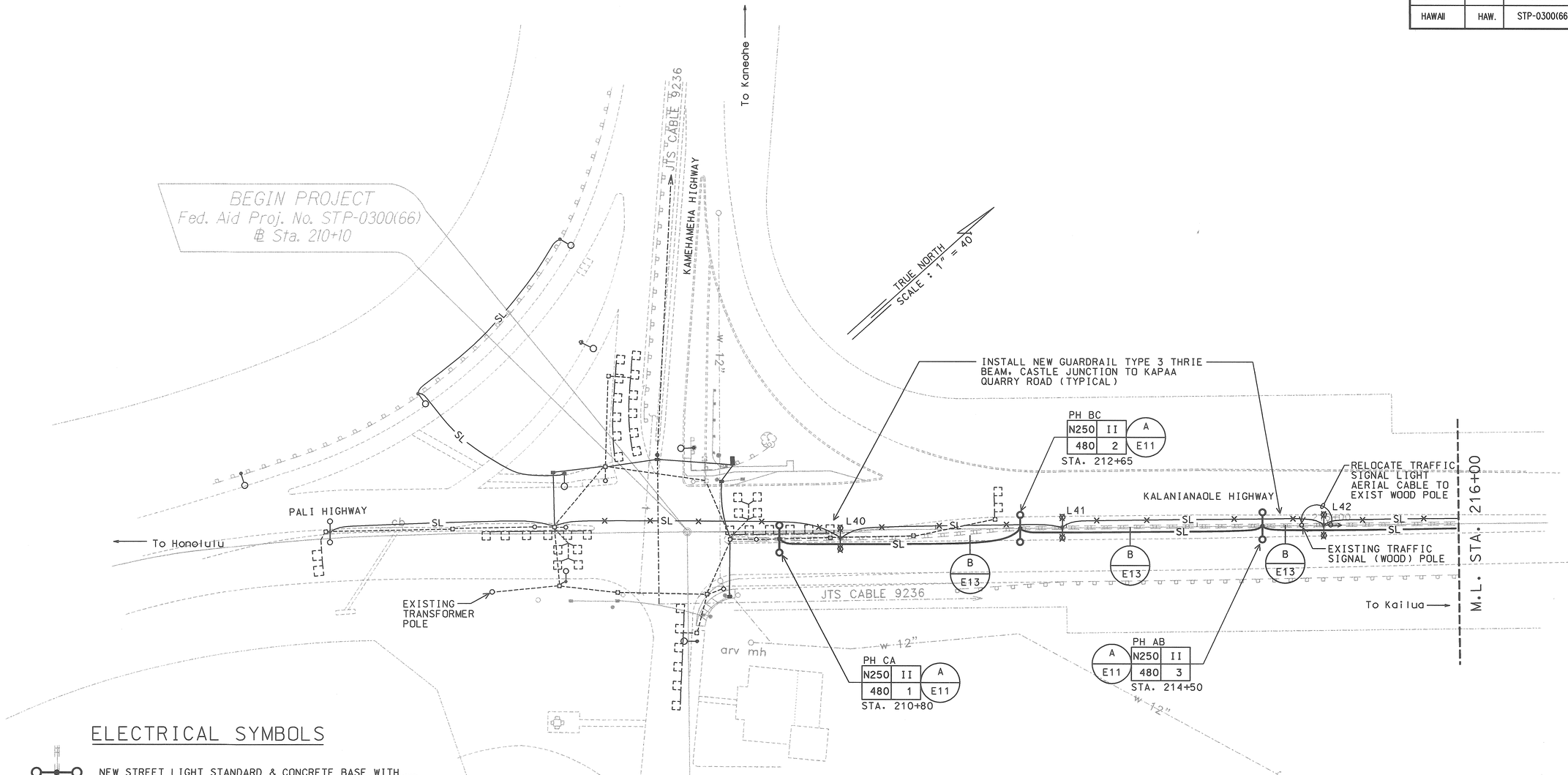

HIGHWAY LIGHTING PLAN

SCALE: 1" = 40'

98058-PA

ELECTRICAL SYMBOLS

- NEW STREET LIGHT STANDARD & CONCRETE BASE WITH DOUBLE ARM & 250W HPS LUMINAIRES. SEE DETAIL A/E11
- NEW STREET LIGHT STANDARD & CONCRETE BASE WITH SINGLE ARM & 250W HPS LUMINAIRE. SEE DETAIL B/E11
- EXISTING STREET LIGHT STANDARD
- EXISTING STREET LIGHT LUMINAIRE & BRACKET ARM ON WOOD POLE
- REMOVED EXISTING STREET LIGHT POLE. DEMOLISH CONCRETE BASE 24" BELOW FINISH GRADE
- —SL— NEW 2" PVC CONDUIT
- —SL— REMOVE EXISTING CONDUCTORS. ABANDON CONDUIT IN PLACE
- STREET LIGHT PULLBOX. SEE DETAIL A/E15

AS-BUILT
2/4/03
DATE

R.C. KATAHARA
LICENSED PROFESSIONAL ENGINEER
No. 3181-E
HAWAII, U.S.A.

THIS WORK WAS PREPARED BY ME OR UNDER MY SUPERVISION.
R.C. Katahara 1/30/03
MK ENGINEERS, LTD.

STATE OF HAWAII
DEPARTMENT OF TRANSPORTATION
HIGHWAYS DIVISION

SITE ELECTRICAL PLAN

HIGHWAY LIGHTING SAFETY IMPROVEMENTS
KALANIANAOLE HIGHWAY
VICINITY OF CASTLE JUNCTION TO WAIMANALO JUNCTION
FEDERAL AID PROJ. NO. STP-0300(66)

SCALE: AS NOTED DATE: DECEMBER 1998

SHEET No. E4 OF 56 SHEETS

FED. ROAD DIST. NO.	STATE	FED. AID PROJ. NO.	FISCAL YEAR	SHEET NO.	TOTAL SHEETS
HAWAII	HAW.	STP-0300(66)	1998	5	

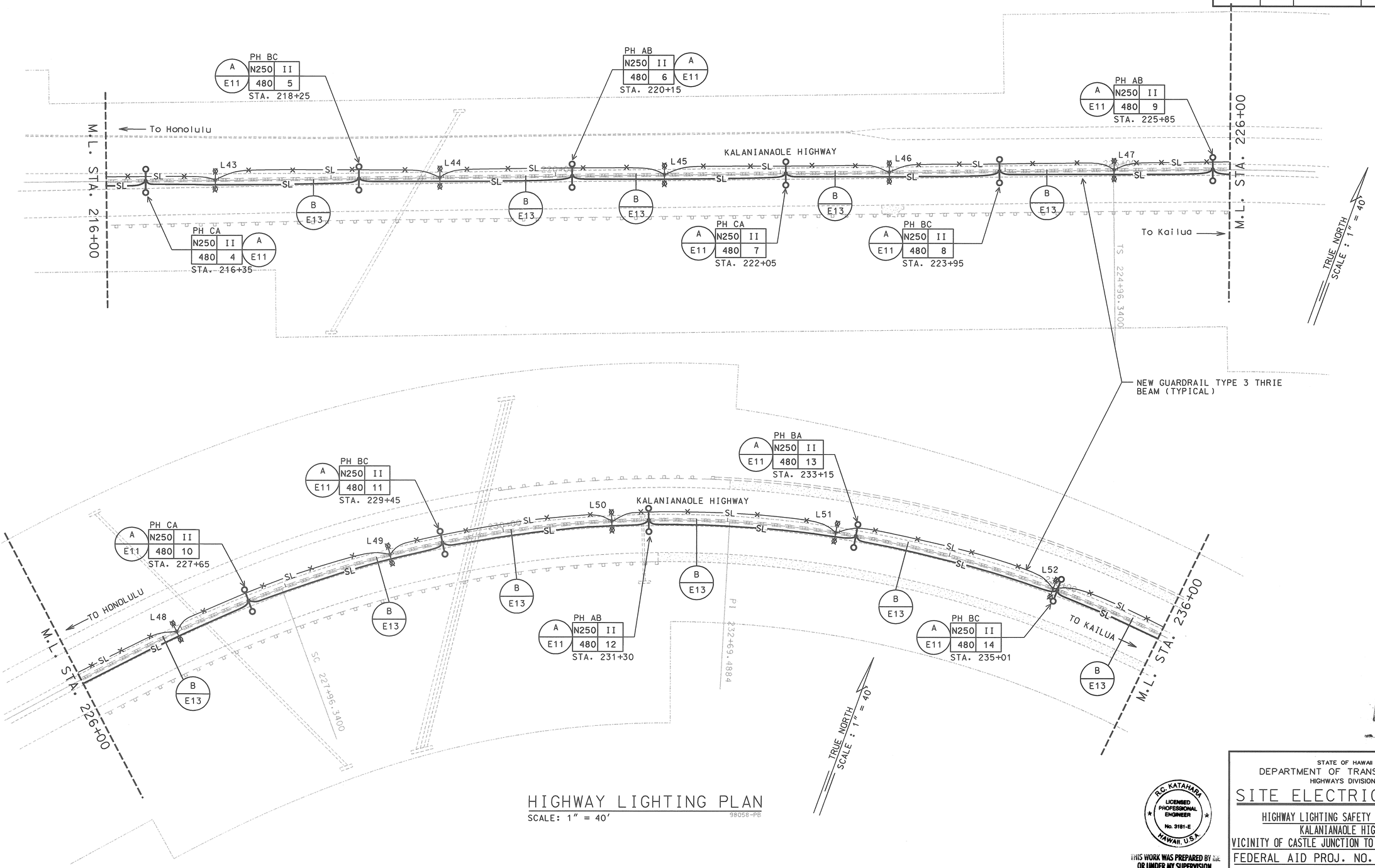

HIGHWAY LIGHTING PLAN

SCALE: 1" = 40'

98058-PB

AS-BUILT
2/4/03
DATE

R.C. KATAHARA
LICENSED PROFESSIONAL ENGINEER
No. 3181-E
HAWAII, U.S.A.

THIS WORK WAS PREPARED BY ME OR UNDER MY SUPERVISION.
R.C. Katahara 11/27/98
MK ENGINEERS, LTD.

STATE OF HAWAII
DEPARTMENT OF TRANSPORTATION
HIGHWAYS DIVISION

SITE ELECTRICAL PLAN

HIGHWAY LIGHTING SAFETY IMPROVEMENTS
KALANIANAOLE HIGHWAY
VICINITY OF CASTLE JUNCTION TO WAIMANALO JUNCTION
FEDERAL AID PROJ. NO. STP-0300(66)

SCALE: AS NOTED DATE: DECEMBER 1998

SHEET No. E5 OF 56 SHEETS

FED. ROAD DIST. NO.	STATE	FED. AID PROJ. NO.	FISCAL YEAR	SHEET NO.	TOTAL SHEETS
HAWAII	HAW.	STP-0300(66)	1998	6	

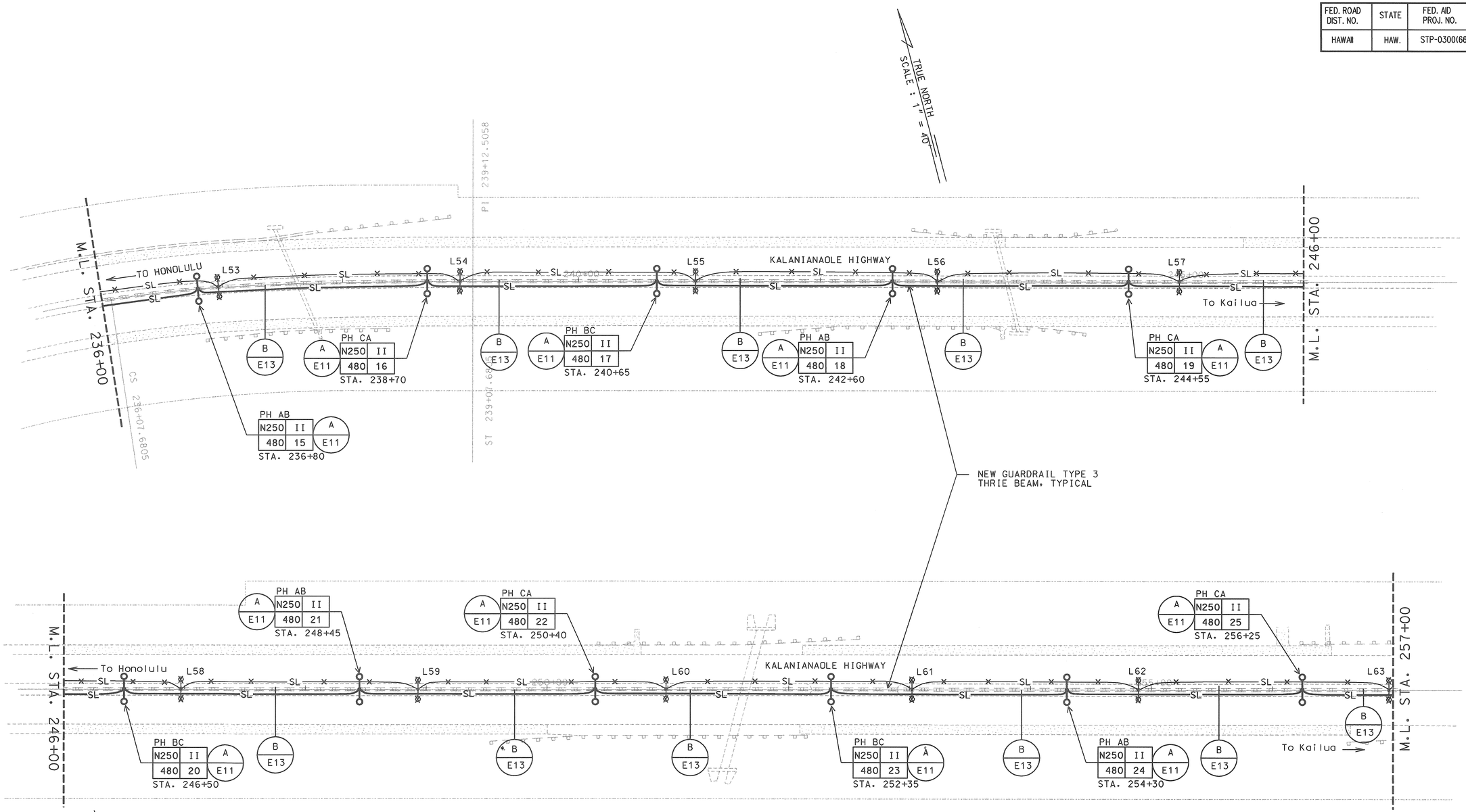

HIGHWAY LIGHTING PLAN

SCALE: 1" = 40'

98058-PC

AS-BUILT
2/4/03
DATE

R.C. KATAHARA
LICENSED PROFESSIONAL ENGINEER
No. 3181-E
HAWAII, U.S.A.

THIS WORK WAS PREPARED BY ME OR UNDER MY SUPERVISION.
R.C. Katahara 1/25/03
MK ENGINEERS, LTD.

STATE OF HAWAII
DEPARTMENT OF TRANSPORTATION
HIGHWAYS DIVISION

SITE ELECTRICAL PLAN

HIGHWAY LIGHTING SAFETY IMPROVEMENTS
KALANIANAOLE HIGHWAY
VICINITY OF CASTLE JUNCTION TO WAIMANALO JUNCTION
FEDERAL AID PROJ. NO. STP-0300(66)

SCALE: AS NOTED DATE: DECEMBER 1998

SHEET No. E6 OF 56 SHEETS

FED. ROAD DIST. NO.	STATE	FED. AID PROJ. NO.	FISCAL YEAR	SHEET NO.	TOTAL SHEETS
HAWAII	HAW.	STP-0300(66)	1998	7	

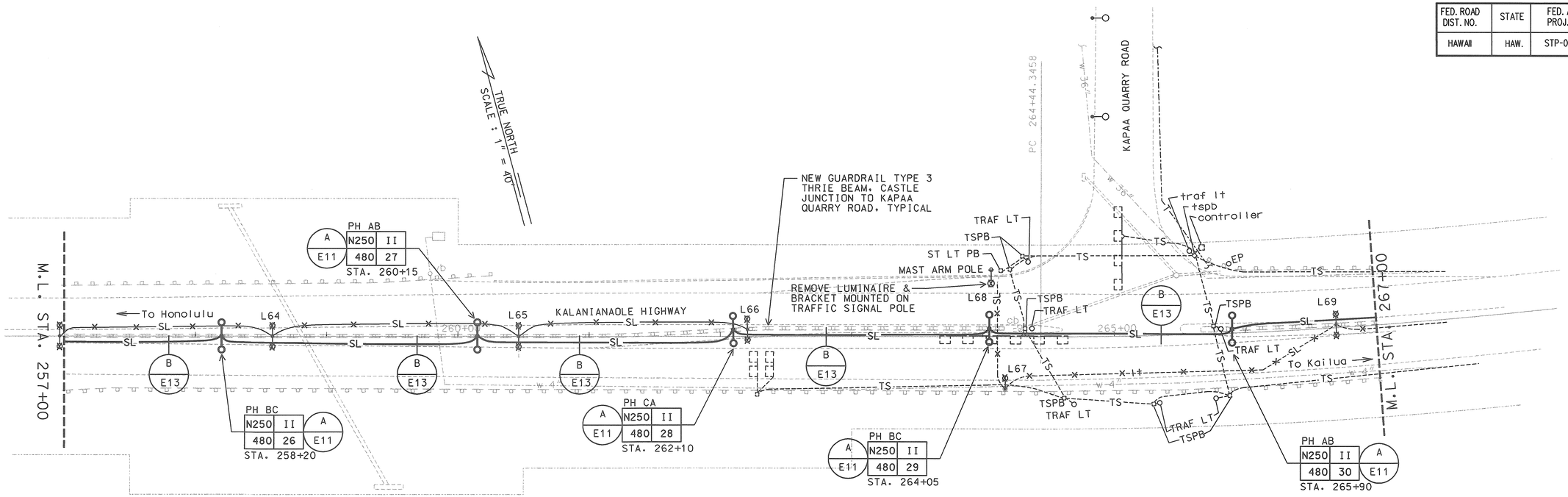

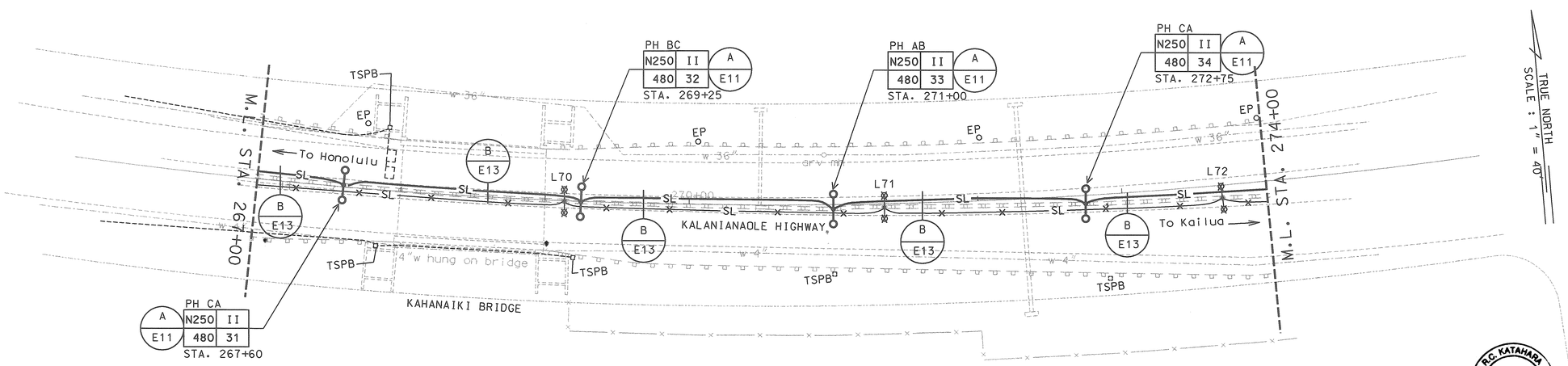

HIGHWAY LIGHTING PLAN

SCALE: 1" = 40'

98058-PD

AS-BUILT
3/4/03
DATE

R.C. KATAHARA
LICENSED PROFESSIONAL ENGINEER
No. 3181-E
HAWAII, U.S.A.

THIS WORK WAS PREPARED BY ME OR UNDER MY SUPERVISION.
11/25/98
MK ENGINEERS, LTD.

STATE OF HAWAII
DEPARTMENT OF TRANSPORTATION
HIGHWAYS DIVISION

SITE ELECTRICAL PLAN

HIGHWAY LIGHTING SAFETY IMPROVEMENTS
KALANIANAOLE HIGHWAY
VICINITY OF CASTLE JUNCTION TO WAIMANALO JUNCTION
FEDERAL AID PROJ. NO. STP-0300(66)

SCALE: AS NOTED DATE: DECEMBER 1998

SHEET No. E7 OF 56 SHEETS

FED. ROAD DIST. NO.	STATE	FED. AID PROJ. NO.	FISCAL YEAR	SHEET NO.	TOTAL SHEETS
HAWAII	HAW.	STP-0300(66)	1998	8	

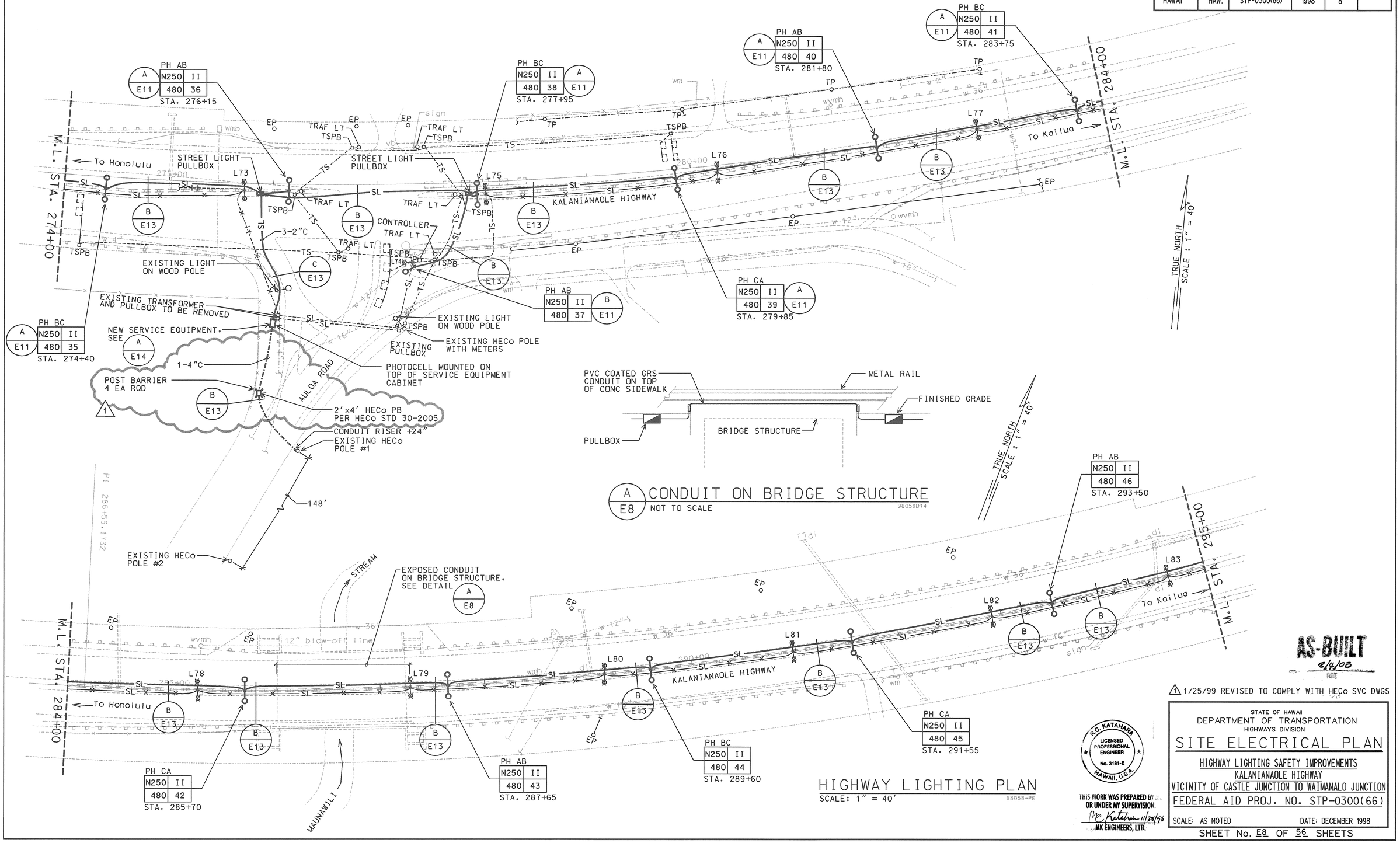

AS-BUILT 2/2/03

1/25/99 REVISED TO COMPLY WITH HECo SVC DWGS

STATE OF HAWAII
DEPARTMENT OF TRANSPORTATION
HIGHWAYS DIVISION

SITE ELECTRICAL PLAN

HIGHWAY LIGHTING SAFETY IMPROVEMENTS
KALANIANAOLE HIGHWAY
VICINITY OF CASTLE JUNCTION TO WAIMANALO JUNCTION
FEDERAL AID PROJ. NO. STP-0300(66)

SCALE: AS NOTED DATE: DECEMBER 1998

R.C. KATAHARA LICENSED PROFESSIONAL ENGINEER No. 3181-E HAWAII, U.S.A.

THIS WORK WAS PREPARED BY ME OR UNDER MY SUPERVISION.
R.C. Katahara 11/25/98
MK ENGINEERS, LTD.

SHEET No. E8 OF 56 SHEETS

FED. ROAD DIST. NO.	STATE	FED. AID PROJ. NO.	FISCAL YEAR	SHEET NO.	TOTAL SHEETS
HAWAII	HAW.	STP-0300(66)	1998	9	

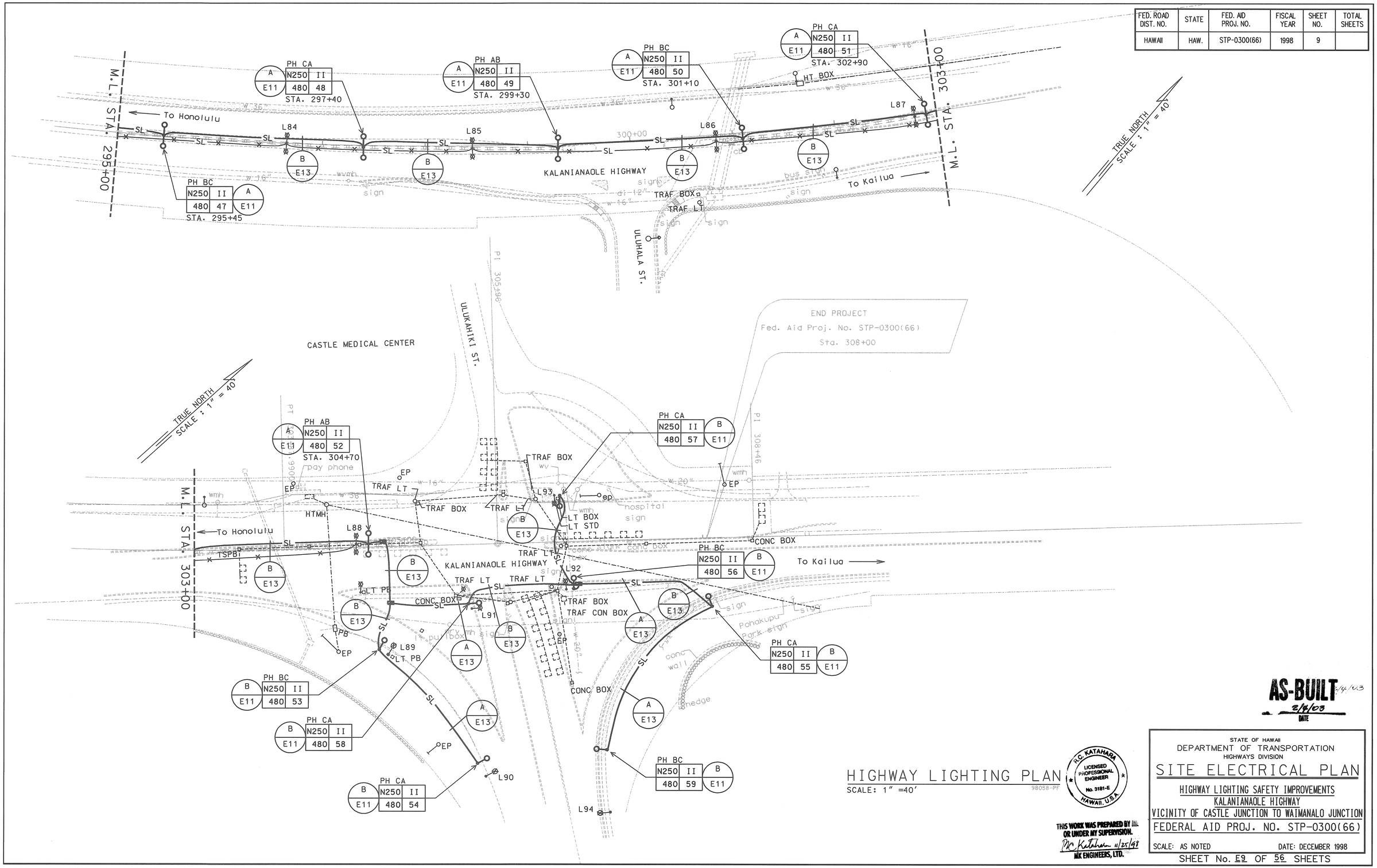

AS-BUILT 1/4/03
2/4/03
DATE

HIGHWAY LIGHTING PLAN
SCALE: 1" =40'
98058-PF

R.C. KATAHARA
LICENSED PROFESSIONAL ENGINEER
No. 3181-E
HAWAII, U.S.A.

THIS WORK WAS PREPARED BY ME OR UNDER MY SUPERVISION.
R.C. Katahara 11/25/98
MK ENGINEERS, LTD.

STATE OF HAWAII
DEPARTMENT OF TRANSPORTATION
HIGHWAYS DIVISION

SITE ELECTRICAL PLAN

HIGHWAY LIGHTING SAFETY IMPROVEMENTS
KALANIANAOLE HIGHWAY
VICINITY OF CASTLE JUNCTION TO WAIMANALO JUNCTION
FEDERAL AID PROJ. NO. STP-0300(66)

SCALE: AS NOTED DATE: DECEMBER 1998

SHEET No. E9 OF 56 SHEETS

FED. ROAD DIST. NO.	STATE	FED. AID PROJ. NO.	FISCAL YEAR	SHEET NO.	TOTAL SHEETS
HAWAII	HAW.	STP-0300(66)	1998	10	

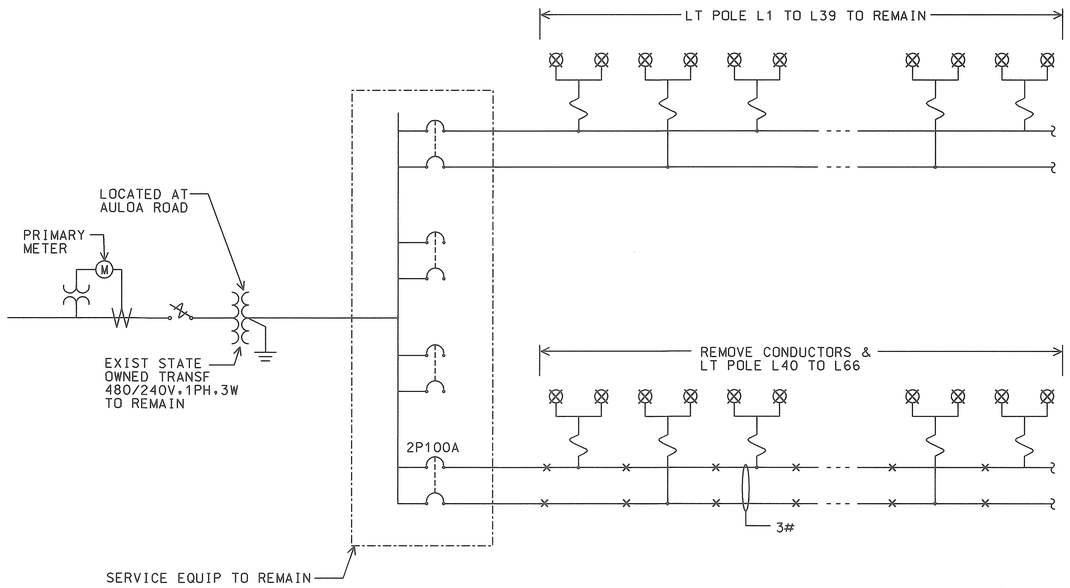

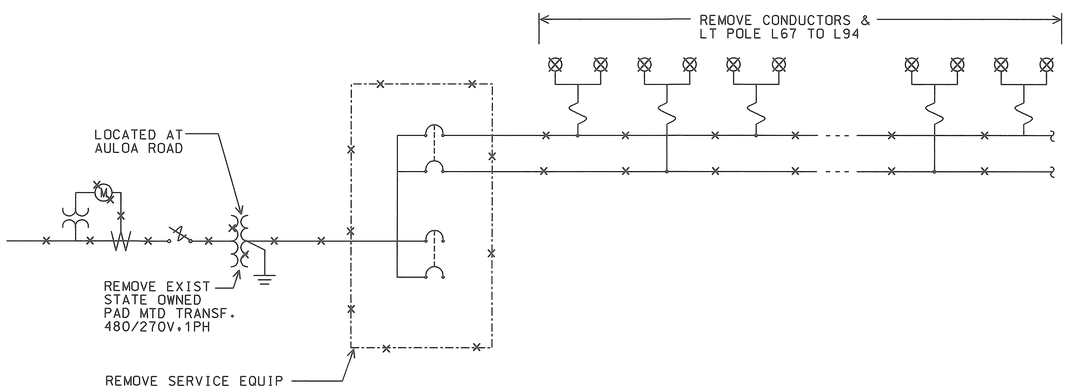

EXISTING ONE-LINE DIAGRAM

98058-3L

AS-BUILT
2/4/03
DATE

R.C. KATAHARA
LICENSED PROFESSIONAL ENGINEER
No. 3181-E
HAWAII, U.S.A.

THIS WORK WAS PREPARED BY ME OR UNDER MY SUPERVISION.
RC Katahara 11/27/98
MK ENGINEERS, LTD.

STATE OF HAWAII
DEPARTMENT OF TRANSPORTATION
HIGHWAYS DIVISION

EXISTING ONE-LINE DIAGRAM

HIGHWAY LIGHTING SAFETY IMPROVEMENTS
KALANIANAOLE HIGHWAY
VICINITY OF CASTLE JUNCTION TO WAIMANALO JUNCTION
FEDERAL AID PROJ. NO. STP-0300(66)

SCALE: AS NOTED DATE: DECEMBER 1998

SHEET No. E10 OF 56 SHEETS

FED. ROAD DIST. NO.	STATE	FED. AID PROJ. NO.	FISCAL YEAR	SHEET NO.	TOTAL SHEETS
HAWAII	HAW.	STP-0300(66)	1998	11	

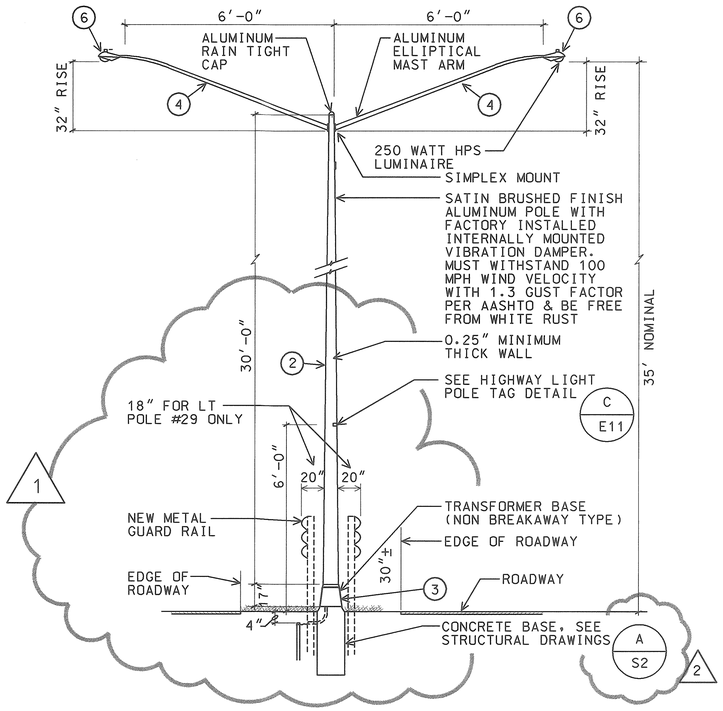

A / E11 TYPICAL STREET LIGHT STANDARD INSTALLATION BASE WITH TRANSFORMER BASE BETWEEN GUARD RAIL

NTS

98058-D2

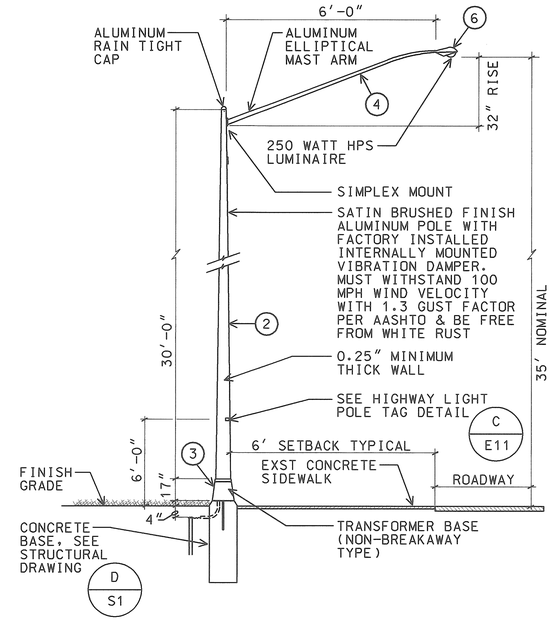

B / E11 TYPICAL STREET LIGHT STANDARD INSTALLATION WITH TRANSFORMER BASE

NTS

98058-D3

MATERIAL LIST		
ITEM	DESCRIPTION	MANUFACTURER
1	LIGHT POLE, 28', ALUM	LEXINGTON 2708-45808T4
2	LIGHT POLE, 30', ALUM	LEXINGTON 2908-45808T4
3	TRANSFORMER BASE (ALUM)	LEXINGTON 08R1012S17
4	MAST ARM, 6', ALUM, SINGLE/DOUBLE SIMPLEX MOUNT (2)	LEXINGTON 2MA0632S
5	MAST ARM, 8', ALUM, SINGLE SIMPLEX MOUNT	LEXINGTON 1MA0832S
6	LUMINAIRE, 250W HPS	GENERAL ELECTRIC M4RR-25-S-5-M-1-G-MS2

98058D11

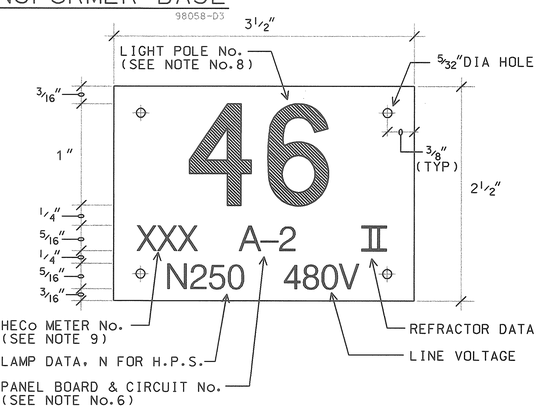

NOTES:

1. USE 3 PLY LAMINATED FLEXIBLE PLASTIC BLACK-WHITE-BLACK THICKNESS BLACK CAP SHEET-0.010", WHITE BASE SHEET-0.052", BLACK BASE SHEET-0.010".
2. LIGHT POLE NUMBER SIZE SHALL BE 1" HIGH AND ENGRAVED 1/8" WIDE, WHITE IN COLOR (NUMBER AS REQUIRED).
3. NOMENCLATURE SIZE SHALL BE 5/16" HIGH AND ENGRAVED 1/32" WIDE, WHITE IN COLOR (HECo VAULT NUMBER PANEL BOARD AND CIRCUIT NUMBER, LINE VOLTAGE, LAMP DATA AND REFRACTOR DATA AS REQUIRED.
4. ATTACH TO ALUMINUM AND STEEL POST WITH No. 8 STAINLESS STEEL, 1/2" LONG DRIVE SCREWS IN 1/8" DRILL HOLE. ATTACH TO WOOD POLES WITH 4D ALUMINUM NAIL.
5. NUMBERS ARE INSCRIBED BY CUTTING THROUGH "BLACK CAP SHEET" TO EXPOSE "WHITE LETTERS."
6. NOMENCLATURE REQUIRED FOR SYSTEMS WITH TWO OR MORE CIRCUITS (LETTER INDICATES PANEL BOARD, NUMBER INDICATES CIRCUIT).
7. FOR LIGHT POLES INSTALLED ON RAMP, ASSIGN NUMBERS TO INCLUDE RAMP I.D. AND LIGHT NUMBER. LEGEND MAY BE LESS THAN ONE (1) INCH IN HEIGHT.
8. LIGHT NUMBERS SHALL BE OBTAINED FROM THE STATE. USE AN ALPHABET SUFFIX TO DESIGNATE LIGHTS MOUNTED ON THE SAME POLE (e.g. 123A & 123B).
9. FOR NON-METERED SYSTEM, CALL OUT THE CONTRACT NUMBER.

AS-BUILT
2/4/03
DATE

C / E11 HIGHWAY LIGHT POLE TAG DETAIL

NTS

98058D12

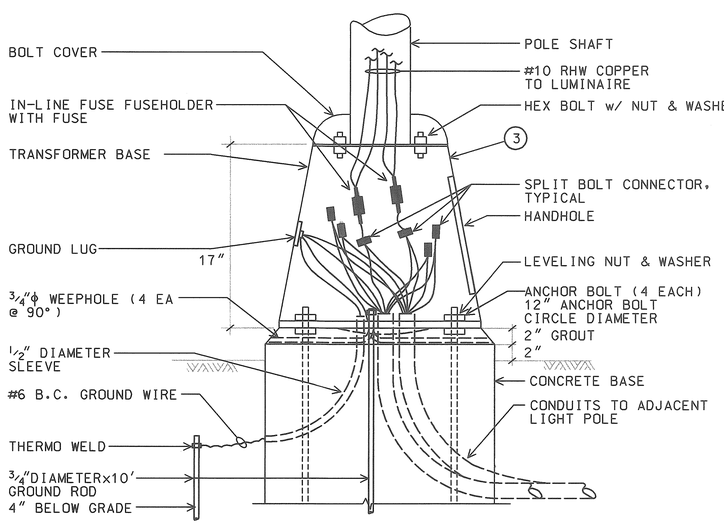

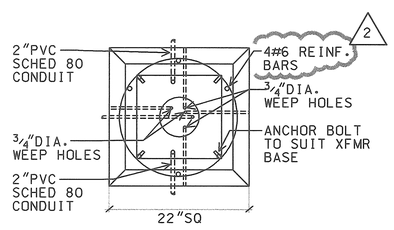

PLAN

TYPICAL TRANSFORMER BASE WIRING DETAIL

NTS

98058D13

DATE	REV	DESCRIPTION
8/16/99	2	REV. REINF BAR SIZE & DETAIL
3/24/99	1	REV. DETAIL OF ST. LT STND BETWEEN GUARD RAIL

R.C. KATAHARA LICENSED PROFESSIONAL ENGINEER No. 3181-E HAWAII, U.S.A.

THIS WORK WAS PREPARED BY ME OR UNDER MY SUPERVISION.
MK ENGINEERS, LTD.

STATE OF HAWAII
DEPARTMENT OF TRANSPORTATION
HIGHWAYS DIVISION

STREET LIGHT DETAILS

HIGHWAY LIGHTING SAFETY IMPROVEMENTS
KALANIANAOLE HIGHWAY
VICINITY OF CASTLE JUNCTION TO WAIMANALO JUNCTION
FEDERAL AID PROJ. NO. STP-0300(66)

SCALE: AS NOTED DATE: DECEMBER 1998

SHEET No. E11 OF 56 SHEETS

C0-E11

FED. ROAD DIST. NO.	STATE	FED. AID PROJ. NO.	FISCAL YEAR	SHEET NO.	TOTAL SHEETS
HAWAII	HAW.	STP-0300(66)	1998	12	

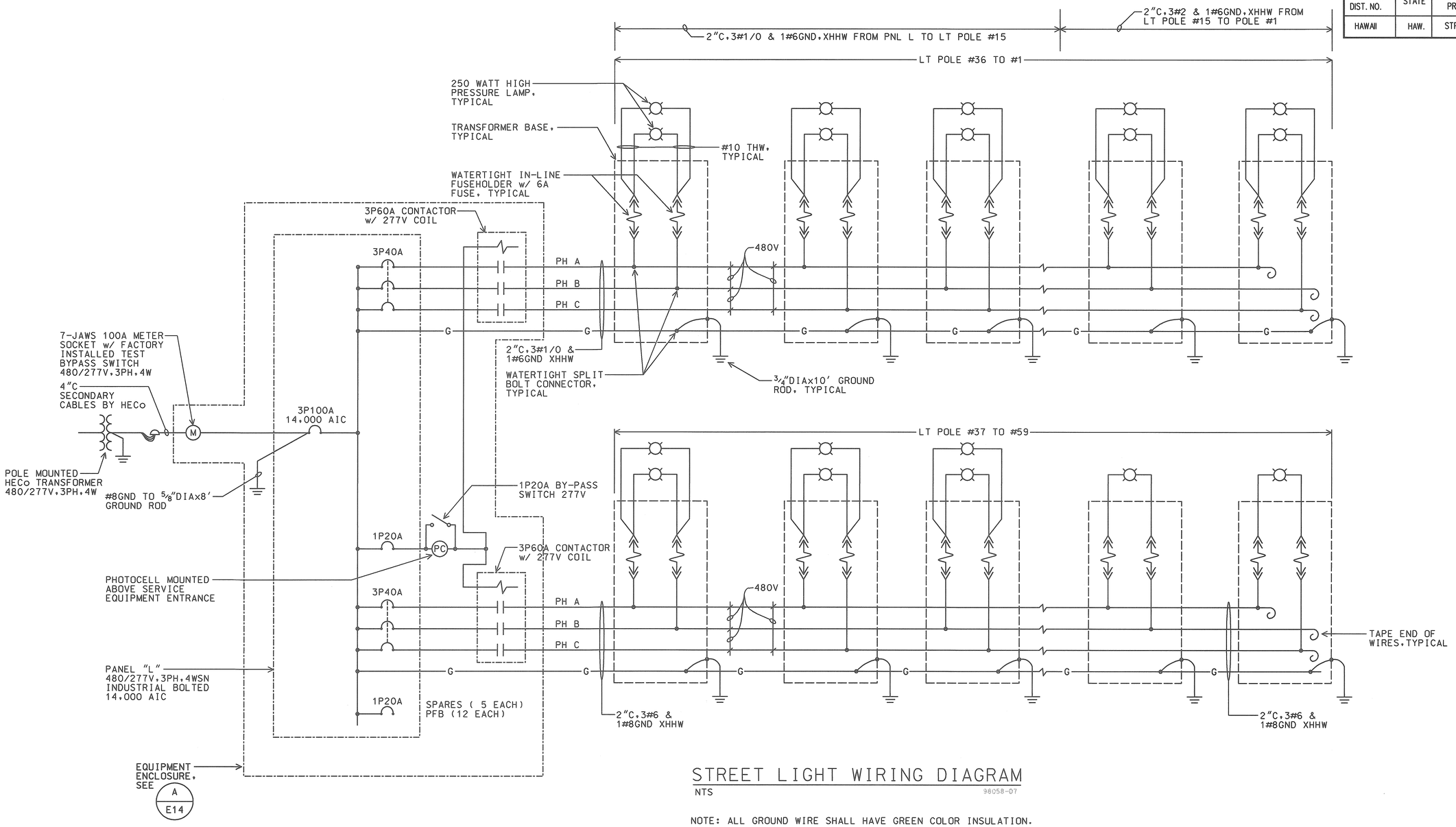

STREET LIGHT WIRING DIAGRAM

NTS

98058-07

NOTE: ALL GROUND WIRE SHALL HAVE GREEN COLOR INSULATION.

AS-BUILT
2/19/03
DATE

R.C. KATAHARA
LICENSED PROFESSIONAL ENGINEER
No. 3181-E
HAWAII, U.S.A.

THIS WORK WAS PREPARED BY ME OR UNDER MY SUPERVISION.
R.C. Katahara 1/25/98
MK ENGINEERS, LTD.

STATE OF HAWAII
DEPARTMENT OF TRANSPORTATION
HIGHWAYS DIVISION

STREET LIGHT WIRING DIAGRAM

HIGHWAY LIGHTING SAFETY IMPROVEMENTS
KALANIANAOLE HIGHWAY
VICINITY OF CASTLE JUNCTION TO WAIMANALO JUNCTION
FEDERAL AID PROJ. NO. STP-0300(66)

SCALE: AS NOTED DATE: DECEMBER 1998

SHEET No. E12 OF 56 SHEETS

FED. ROAD DIST. NO.	STATE	FED. AID PROJ. NO.	FISCAL YEAR	SHEET NO.	TOTAL SHEETS
HAWAII	HAW.	STP-0300(66)	1998	13	

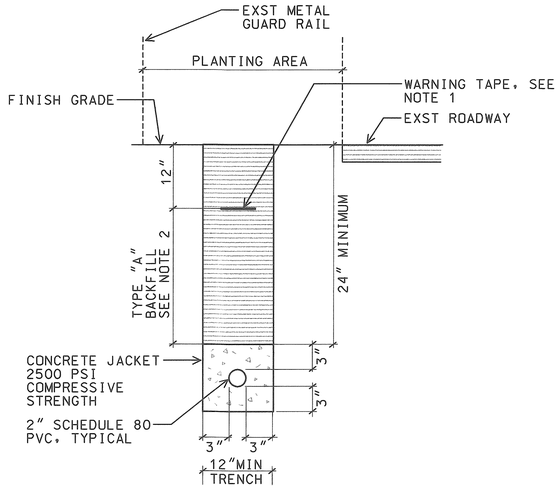

A / E13 CONCRETE ENCASED (NON ROADWAY AREA)
NTS
98058-DD

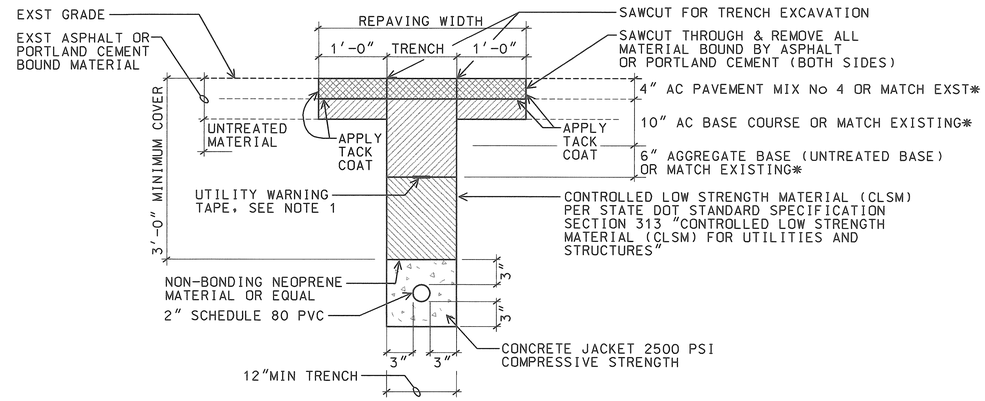

* MINIMUM THICKNESS OR REPLACE TO EXISTING THICKNESS IF GREATER.

B / E13 TYPICAL PAVEMENT RESTORATION IN STATE HIGHWAY
NTS
98058-DD

NOTES:

1. 8 MIL THICK RED COLORED PLASTIC WARNING TAPE 3" WIDE, ENTIRE LENGTH OF DUCT. TAPE TO HAVE CONTINUOUS METALLIC BACKING AND CORROSION RESISTANT FOIL CORE. WARNING AND IDENTIFICATION TO BE IMPRINTED ON TAPE AND SHALL READ "CAUTION BURIED ELECTRIC CABLE BELOW". MESSAGE SHALL BE REPEATED APPROXIMATELY EVERY TEN FEET.
2. TYPE "A" BACKFILL: BEACH SAND, EARTH OR EARTH AND GRAVEL USED, THE MAXIMUM ROCK SIZE SHALL BE 1" AND THE MIXTURE SHALL CONTAIN NOT MORE THAN 50% BY VOLUME OF ROCK PARTICLES.

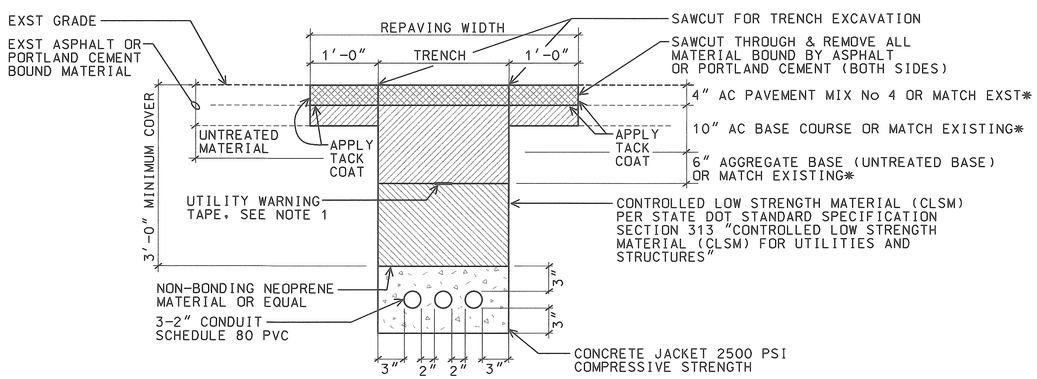

* MINIMUM THICKNESS OR REPLACE TO EXISTING THICKNESS IF GREATER.

C / E13 TYPICAL PAVEMENT RESTORATION IN STATE HIGHWAY
NTS
98058-DD

AS-BUILT
2/4/03
DATE

DATE	REV	DESCRIPTION
8/16/99	1	REV. WARNING TAPE

STATE OF HAWAII
DEPARTMENT OF TRANSPORTATION
HIGHWAYS DIVISION

DUCT SECTIONS

HIGHWAY LIGHTING SAFETY IMPROVEMENTS
KALANIANAOLE HIGHWAY
VICINITY OF CASTLE JUNCTION TO WAIMANALO JUNCTION
FEDERAL AID PROJ. NO. STP-0300(66)

SCALE: AS NOTED DATE: DECEMBER 1998

R.C. KATAHARA
LICENSED PROFESSIONAL ENGINEER
No. 3181-E
HAWAII, U.S.A.

THIS WORK WAS PREPARED BY ME OR UNDER MY SUPERVISION.
11/25/98
MK ENGINEERS, LTD.

SHEET No. E13 OF 56 SHEETS

CO-E13

FED. ROAD DIST. NO.	STATE	FED. AID PROJ. NO.	FISCAL YEAR	SHEET NO.	TOTAL SHEETS
HAWAII	HAW.	STP-0300(66)	1998	14	

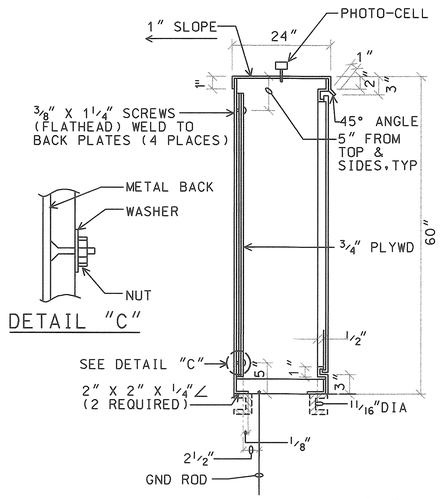

SECTION "A"

DETAIL "C"

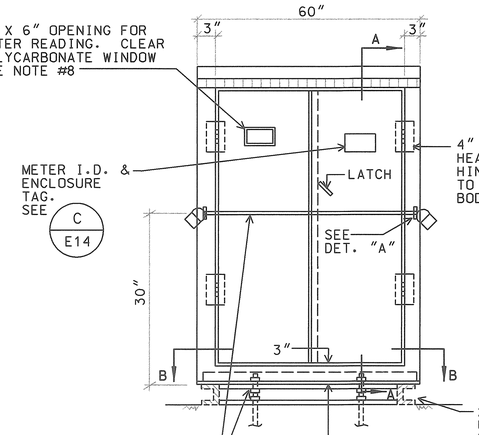

ELEVATION

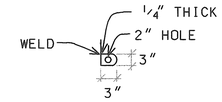

DETAIL "A"
(SIDE VIEW)

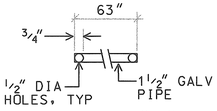

DETAIL "B"

4" X 4" BUTT HEAVY DUTY HINGES WELDED TO DOOR AND BODY. (TYP)

2" X 4" X 4.5 HOT DIPPED GALV U-CHANNEL BOX FRAME. WASH CHANNEL WITH SOLUTION OF CHEMICAL PHOSPHORIC METAL ETCH & ALLOW TO DRY. APPLY TWO COATS OF GALV. METAL PRIMER & TWO COATS OF ENAMEL TO MATCH CABINET.

1/2"DIA x 1 1/2"L GALV MACHINE BOLTS W/ HEX NUT (4 PLACES MIN.)

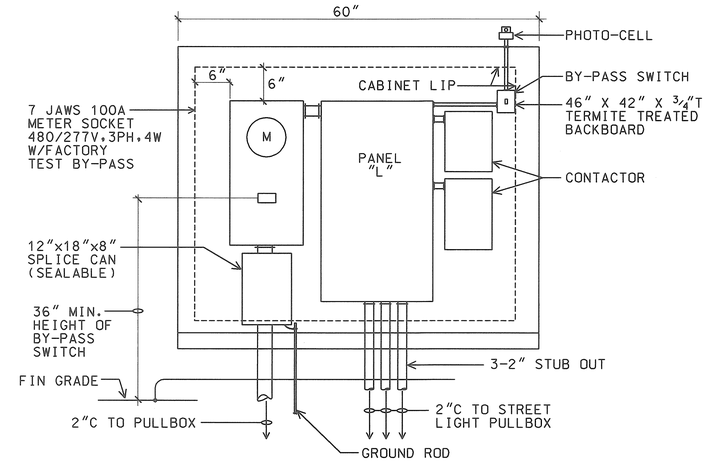

B E14 EQUIPMENT ELEVATION
NTS
98099-DB

NOTES:

1. CABINET TO BE PRIMED WITH ONE COAT SHOP PRIMER.
2. PLYWOOD TO BE 3/4" THICK (MIN.) TREATED (WOLMANIZED) PLYWOOD. (EXTERIOR GRADE)
3. MADE FROM 10 GAUGE ALUMINUM.
4. PROVIDE ACRYLIC ENAMEL FINISH, COLOR TO MATCH TRANSFORMER. (2 COATS)
5. ENCLOSURE SHALL BE NEMA 3R WITH NEOPRENE GASKETING.
6. PADLOCKS:
   1-HECo FURNISHED
   1-CONTRACTOR FURNISHED, BRASS CORBIN SESAME COMBINATION
7. SHOP FABRICATION DRAWINGS SHALL BE SUBMITTED FOR APPROVAL.
8. LOCATION OF OPENING FOR METER READER TO CORRESPOND WITH LOCATION OF METER.

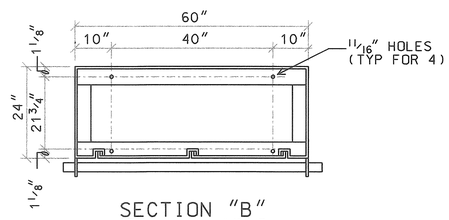

SECTION "B"
(ANGLE FRAME)

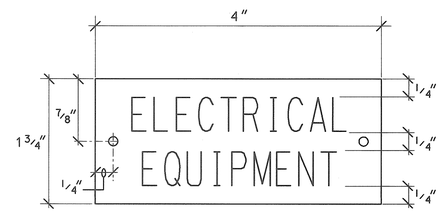

NOTES:

1. USE 2 PLY PLASTIC - BLACK, WHITE.
2. LETTER SIZE SHALL BE 1/2" HIGH AND ENGRAVED 1/16" WIDE, WHITE IN COLOR.
3. ATTACH TO EQUIPMENT ENCLOSURE WITH NO.7 STAINLESS STEEL DRIVE SCREWS.

C E14 METER EQUIPMENT ID TAG DETAIL
NTS
98058-DC

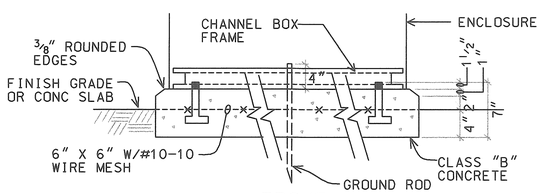

FRONT

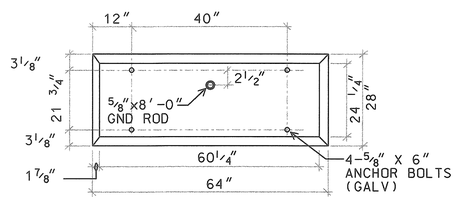

PLAN

CONCRETE PAD

A E14 METER AND EQUIPMENT CABINET
NTS
98058-DA

AS-BUILT
2/4/03

R.C. KATAHARA
LICENSED PROFESSIONAL ENGINEER
No. 3181-E
HAWAII, U.S.A.

THIS WORK WAS PREPARED BY ME OR UNDER MY SUPERVISION.
11/25/98
MK ENGINEERS LTD.

STATE OF HAWAII
DEPARTMENT OF TRANSPORTATION
HIGHWAYS DIVISION

METER DETAILS

HIGHWAY LIGHTING SAFETY IMPROVEMENTS
KALANIANAOLE HIGHWAY
VICINITY OF CASTLE JUNCTION TO WAIMANALO JUNCTION
FEDERAL AID PROJ. NO. STP-0300(66)

SCALE: AS NOTED DATE: DECEMBER 1998

SHEET No. E14 OF 56 SHEETS

FED. ROAD DIST. NO.	STATE	FED. AID PROJ. NO.	FISCAL YEAR	SHEET NO.	TOTAL SHEETS
HAWAII	HAW.	STP-0300(66)	1998		

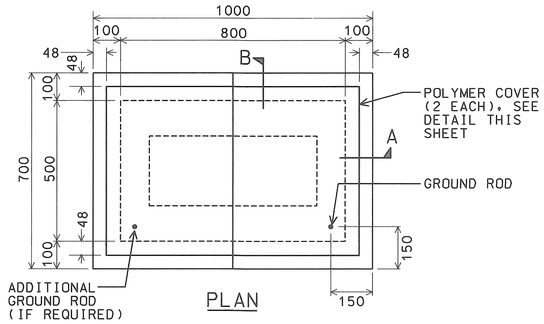

PLAN

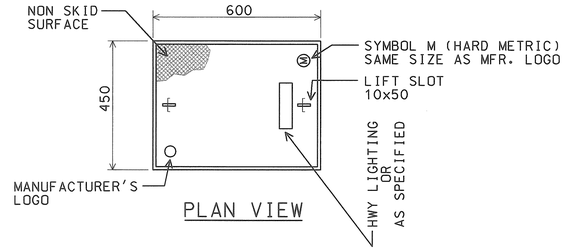

PLAN VIEW

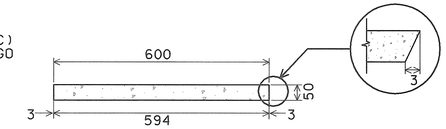

ELEVATION

POLYMER CONCRETE COVER

NOT TO SCALE 98058-DF

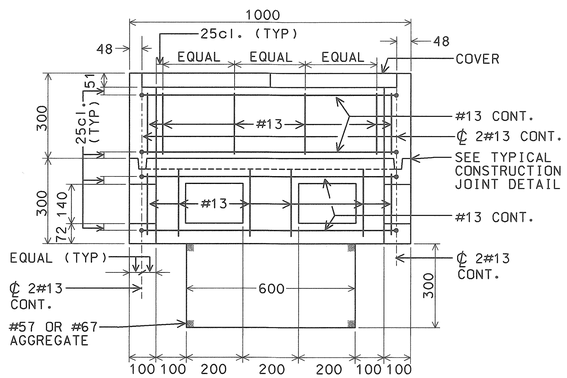

SECTION A-A

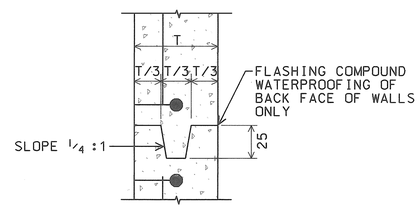

TYPICAL CONSTRUCTION JOINT DETAIL

NOT TO SCALE 98058-DF

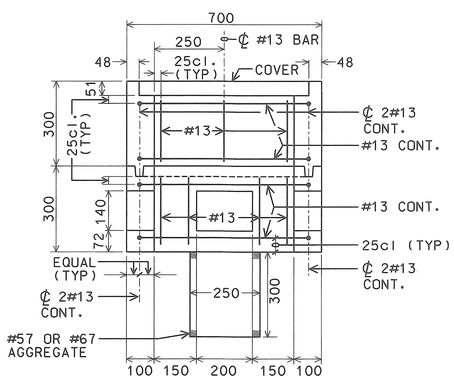

SECTION B-B

A / E15 TYPE "B" PULLBOX (OLD TYPE "C")

SCALE: 1:100 98058-DF

GENERAL NOTES:

1. ALL PRE-CAST CONCRETE PULLBOXES SHALL BE MANUFACTURED IN TWO PIECES.
2. THE PULLBOX WITH COVER SHALL BE CAPABLE OF SUPPORTING AN MS 18 LOADING.
3. THE MAXIMUM WEIGHT OF THE PULLBOX COVER SHALL NOT EXCEED 27 KILOGRAMS.
4. THE OPENINGS FOR THE CONDUITS ON ALL PULLBOXES SHALL BE PRE-CAST CONCRETE KNOCKOUTS.
5. AFTER INSTALLING THE CONDUITS IN THE OPENINGS OF THE PULLBOXES, THE CONTRACTOR SHALL FILL THE EXCESS OPENING IN THE PRE-CAST KNOCKOUTS WITH CONCRETE MORTAR.
6. PRIOR TO INSTALLING THE PULLBOXES, THE CONTRACTOR SHALL LEVEL THE BOTTOM OF THE TRENCH AND ACHIEVE A MINIMUM OF 95% RELATIVE COMPACTION OF THE BOTTOM OF THE TRENCH.
7. ALL CONCRETE SHALL BE CLASS A (25MPa, MINIMUM).
8. REBARS SHALL BE GRADE 300 AND ALL LAPPED SPLICES SHALL BE 360mm MINIMUM.
10. THE #57 OR #67 SIZE AGGREGATE SHALL CONFORM TO LATEST VERSION OF AASHTO M43 (ASTM D 448).

AS-BUILT
2/4/03
DATE

R.C. KALLEMAN
LICENSED PROFESSIONAL ENGINEER
No. 3181-E
HAWAII, U.S.A.

THIS WORK WAS PREPARED BY ME OR UNDER MY SUPERVISION.
11/27/98
MK ENGINEERS, LTD.

STATE OF HAWAII
DEPARTMENT OF TRANSPORTATION
HIGHWAYS DIVISION

PULLBOX DETAILS

HIGHWAY LIGHTING SAFETY IMPROVEMENTS
KALANIANAOLE HIGHWAY
VICINITY OF CASTLE JUNCTION TO WAIMANALO JUNCTION
FEDERAL AID PROJ. NO. STP-0300(66)

SCALE: AS NOTED DATE: DECEMBER 1998

SHEET No. E15 OF 56 SHEETS

FED. ROAD DIST. NO.	STATE	FED. AID PROJ. NO.	FISCAL YEAR	SHEET NO.	TOTAL SHEETS
HAWAII	HAW.	STP-0300(66)	1998		

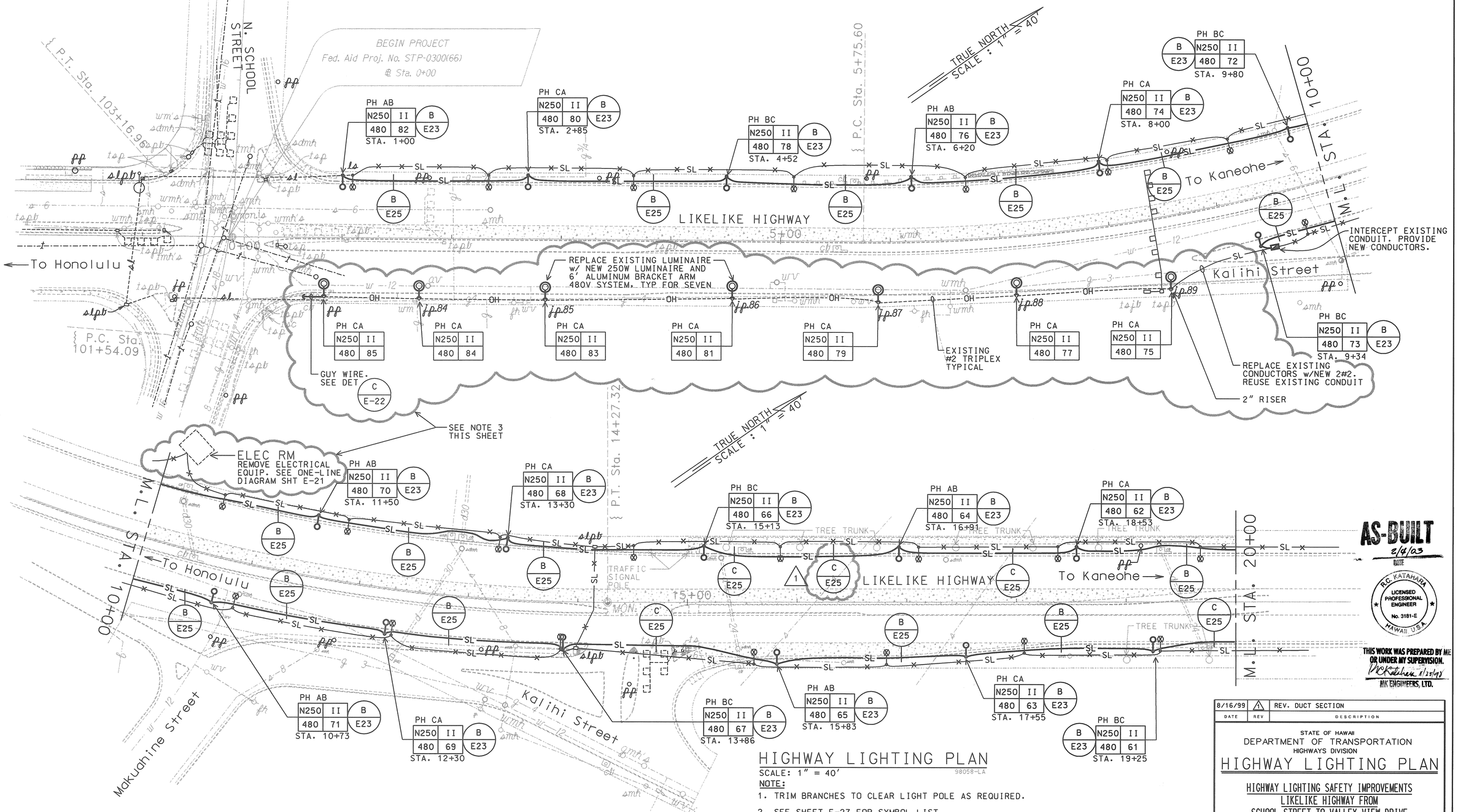

AS-BUILT
2/4/03
DATE

R.C. KATAHARA
LICENSED PROFESSIONAL ENGINEER
No. 3181-E
HAWAII, U.S.A.

THIS WORK WAS PREPARED BY ME OR UNDER MY SUPERVISION.
2/25/03
MK ENGINEERS, LTD.

HIGHWAY LIGHTING PLAN

SCALE: 1" = 40'

98058-LA

NOTE:

1. TRIM BRANCHES TO CLEAR LIGHT POLE AS REQUIRED.
2. SEE SHEET E-27 FOR SYMBOL LIST.
3. THE ITEMS SHOWN WITHIN THE "CLOUDS" IDENTIFY WORK WHICH IS NOT PART OF THE BASIC CONTRACT REQUIREMENTS, AND WHICH HAS BEEN INCLUDED ON THESE DRAWINGS IN RESPONSE TO REVIEW COMMENTS MADE BY THE STATE ON THE FIRST DRAWING SUBMISSION.

DATE	REV	DESCRIPTION
8/16/99	1	REV. DUCT SECTION

STATE OF HAWAII
DEPARTMENT OF TRANSPORTATION
HIGHWAYS DIVISION

HIGHWAY LIGHTING PLAN

HIGHWAY LIGHTING SAFETY IMPROVEMENTS
LIKELIKE HIGHWAY FROM
SCHOOL STREET TO VALLEY VIEW DRIVE

PROJECT NO. STP-0300(66)

SCALE: AS NOTED DATE: OCTOBER 1998

SHEET No. E16 OF 56 SHEETS

CO-E16

FED. ROAD DIST. NO.	STATE	FED. AID PROJ. NO.	FISCAL YEAR	SHEET NO.	TOTAL SHEETS
HAWAII	HAW.	STP-0300(66)	1998		

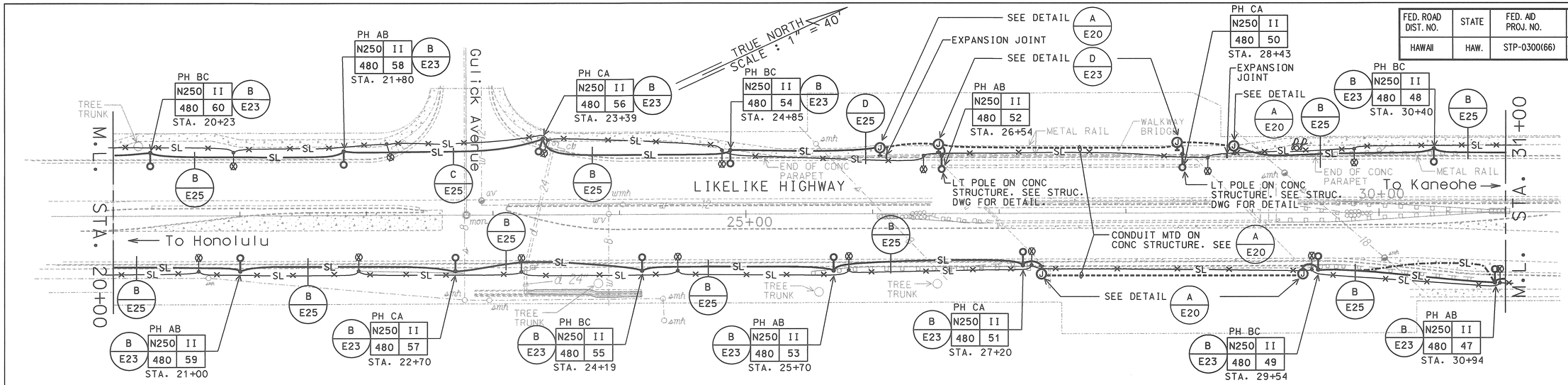

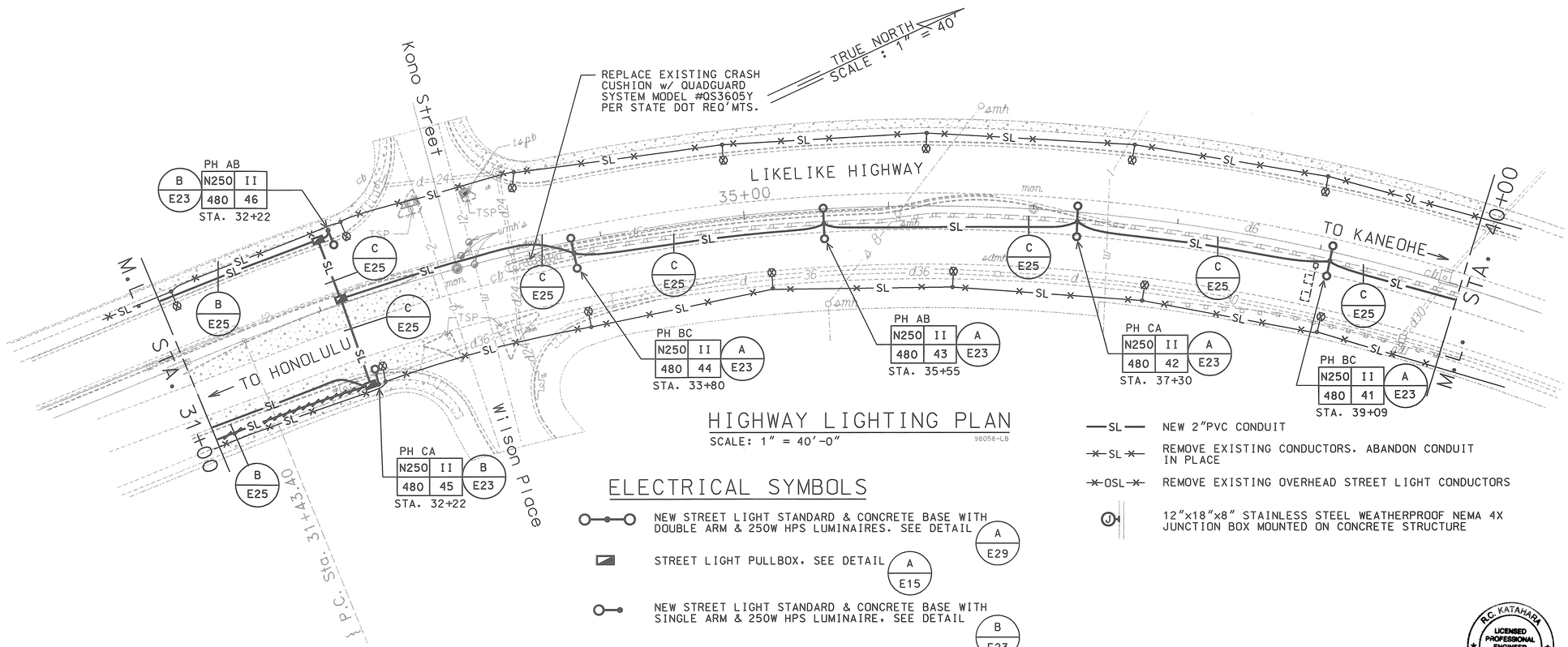

HIGHWAY LIGHTING PLAN

SCALE: 1" = 40'-0"

98058-LB

ELECTRICAL SYMBOLS

- NEW STREET LIGHT STANDARD & CONCRETE BASE WITH DOUBLE ARM & 250W HPS LUMINAIRES. SEE DETAIL A E29
- STREET LIGHT PULLBOX. SEE DETAIL A E15
- NEW STREET LIGHT STANDARD & CONCRETE BASE WITH SINGLE ARM & 250W HPS LUMINAIRE. SEE DETAIL B E23
- REMOVE EXISTING STREET LIGHT POLE. DEMOLISH CONCRETE BASE 24" BELOW FINISH GRADE.
- EXISTING STREET LIGHT LUMINAIRE & BRACKET ARM ON WOOD POLE
- REMOVED EXISTING STREET LIGHT POLE. DEMOLISH CONCRETE BASE 24" BELOW FINISH GRADE 1
- —SL— NEW 2"PVC CONDUIT
- —SL— REMOVE EXISTING CONDUCTORS. ABANDON CONDUIT IN PLACE
- —OSL— REMOVE EXISTING OVERHEAD STREET LIGHT CONDUCTORS
- (J) 12"x18"x8" STAINLESS STEEL WEATHERPROOF NEMA 4X JUNCTION BOX MOUNTED ON CONCRETE STRUCTURE

AS-BUILT
2/4/00
DATE

DATE	REV	DESCRIPTION
8/16/99	1	REV. CONC BASE DEMO TO 24" BFG

R.C. KATAHARA
LICENSED PROFESSIONAL ENGINEER
No. 3181-E
HAWAII U.S.A.

THIS WORK WAS PREPARED BY ME OR UNDER MY SUPERVISION.
11/25/98
MK ENGINEERS, LTD.

STATE OF HAWAII
DEPARTMENT OF TRANSPORTATION
HIGHWAYS DIVISION

HIGHWAY LIGHTING PLAN

HIGHWAY LIGHTING SAFETY IMPROVEMENTS
LIKELIKE HIGHWAY FROM
SCHOOL STREET TO VALLEY VIEW DRIVE

PROJECT NO. STP-0300(66)

SCALE: AS NOTED DATE: OCTOBER 1998

SHEET No. E17 OF 56 SHEETS

CO-E17

FED. ROAD DIST. NO.	STATE	FED. AID PROJ. NO.	FISCAL YEAR	SHEET NO.	TOTAL SHEETS
HAWAII	HAW.	STP-0300(66)	1998		

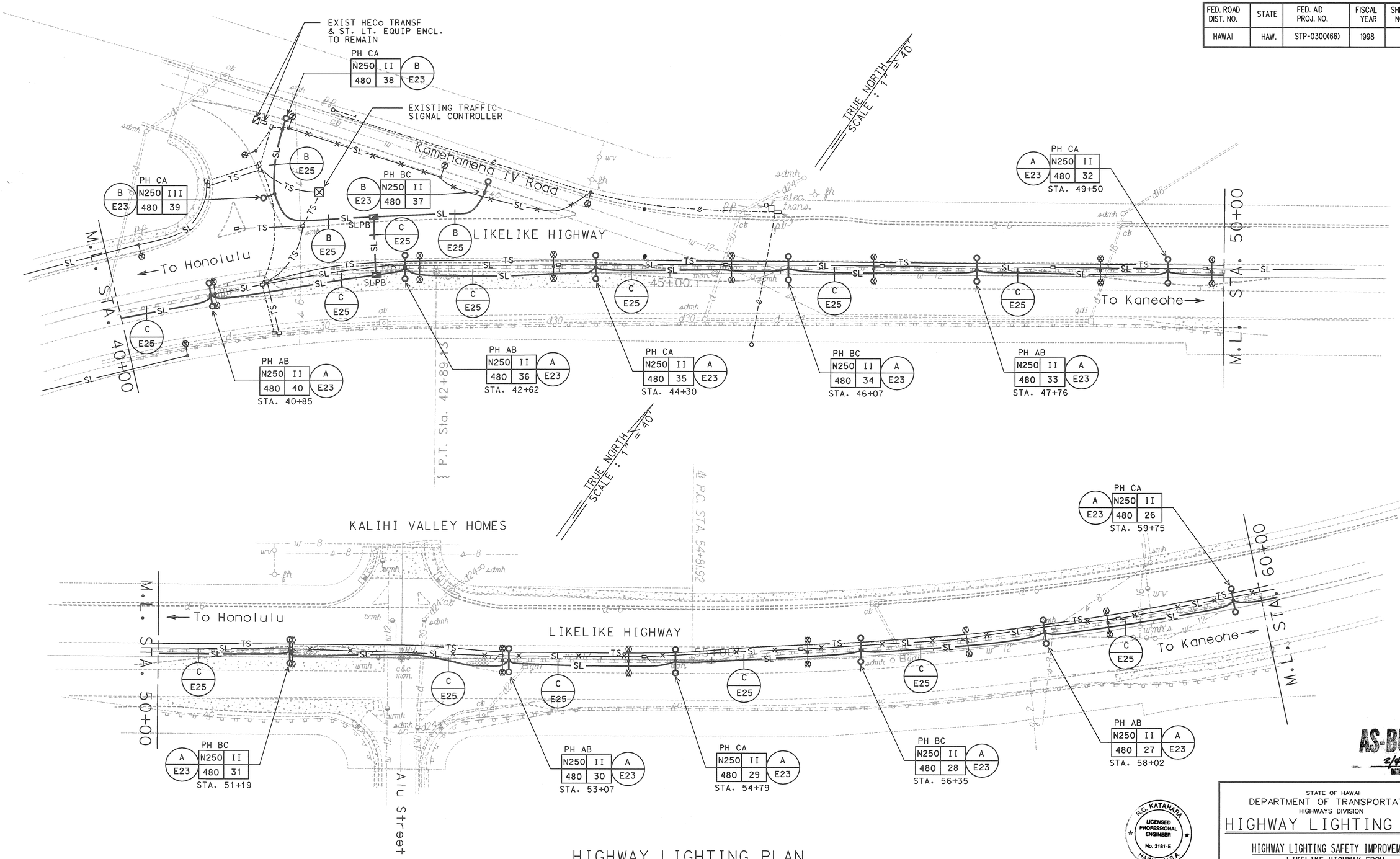

HIGHWAY LIGHTING PLAN

SCALE: 1" = 40'-0"

98058-LC

AS-BUILT
2/4/03
DATE

R.C. KATAHARA
LICENSED PROFESSIONAL ENGINEER
No. 3181-E
HAWAII, U.S.A.

THIS WORK WAS PREPARED BY ME OR UNDER MY SUPERVISION.
11/25/98
MK ENGINEERS, LTD.

STATE OF HAWAII
DEPARTMENT OF TRANSPORTATION
HIGHWAYS DIVISION

HIGHWAY LIGHTING PLAN

HIGHWAY LIGHTING SAFETY IMPROVEMENTS
LIKELIKE HIGHWAY FROM
SCHOOL STREET TO VALLEY VIEW DRIVE

PROJECT NO. STP-0300(66)

SCALE: AS NOTED DATE: OCTOBER 1998

SHEET No. E18 OF 56 SHEETS

FED. ROAD DIST. NO.	STATE	FED. AID PROJ. NO.	FISCAL YEAR	SHEET NO.	TOTAL SHEETS
HAWAII	HAW.	STP-0300(66)	1998		

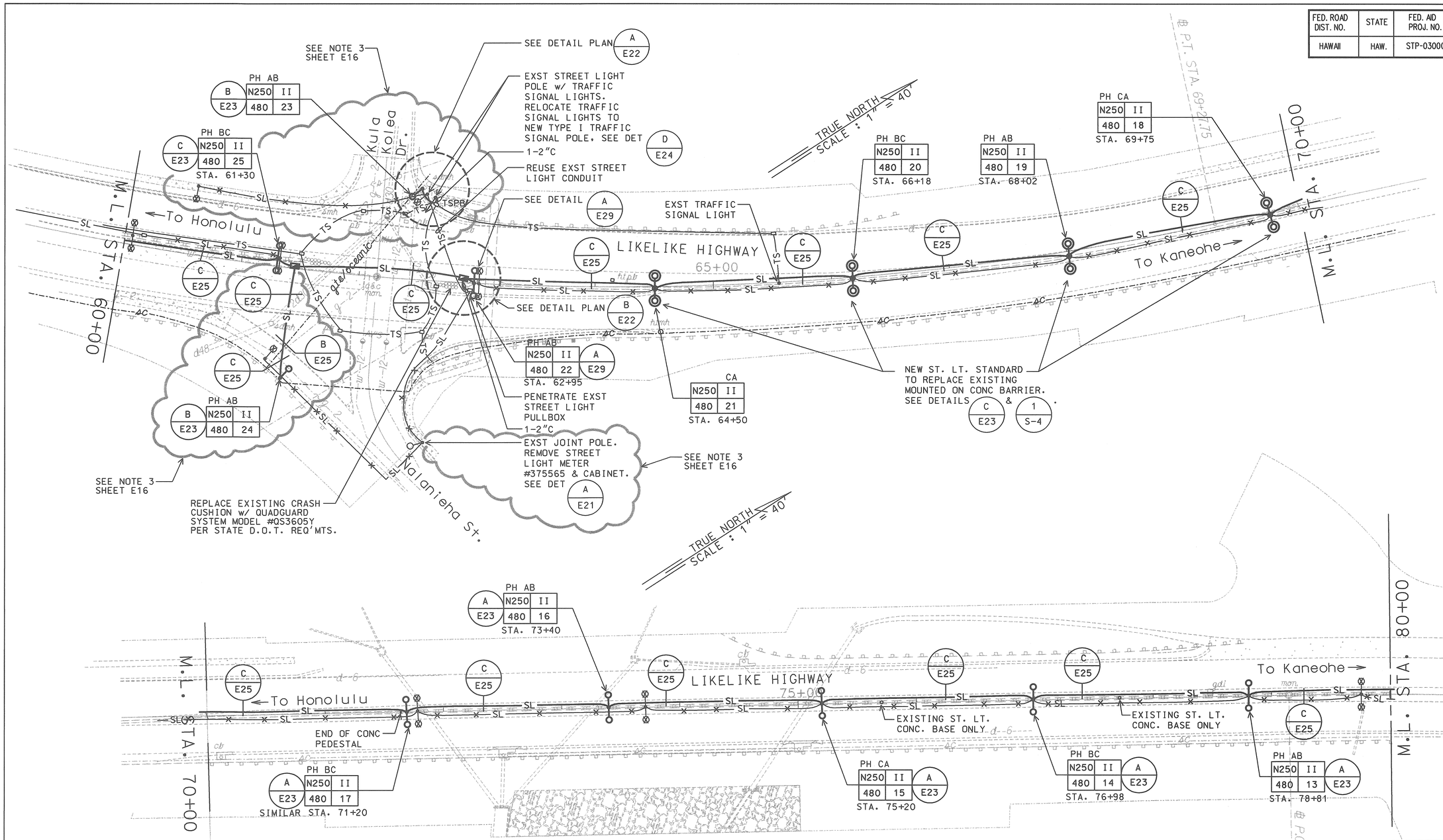

HIGHWAY LIGHTING PLAN

SCALE: 1" = 40'-0"

98058-LD

AS-BUILT
2/8/03
DATE

R.C. KATAHARA
LICENSED PROFESSIONAL ENGINEER
No. 3181-E
HAWAII, U.S.A.

THIS WORK WAS PREPARED BY ME OR UNDER MY SUPERVISION.
R.C. Katahara 11/25/97
MK ENGINEERS, LTD.

STATE OF HAWAII
DEPARTMENT OF TRANSPORTATION
HIGHWAYS DIVISION

HIGHWAY LIGHTING PLAN

HIGHWAY LIGHTING SAFETY IMPROVEMENTS
LIKELIKE HIGHWAY FROM
SCHOOL STREET TO VALLEY VIEW DRIVE

PROJECT NO. STP-0300(66)

SCALE: AS NOTED DATE: OCTOBER 1998

SHEET No. E19 OF 56 SHEETS

FED. ROAD DIST. NO.	STATE	FED. AID PROJ. NO.	FISCAL YEAR	SHEET NO.	TOTAL SHEETS
HAWAII	HAW.	STP-0300(66)	1998		

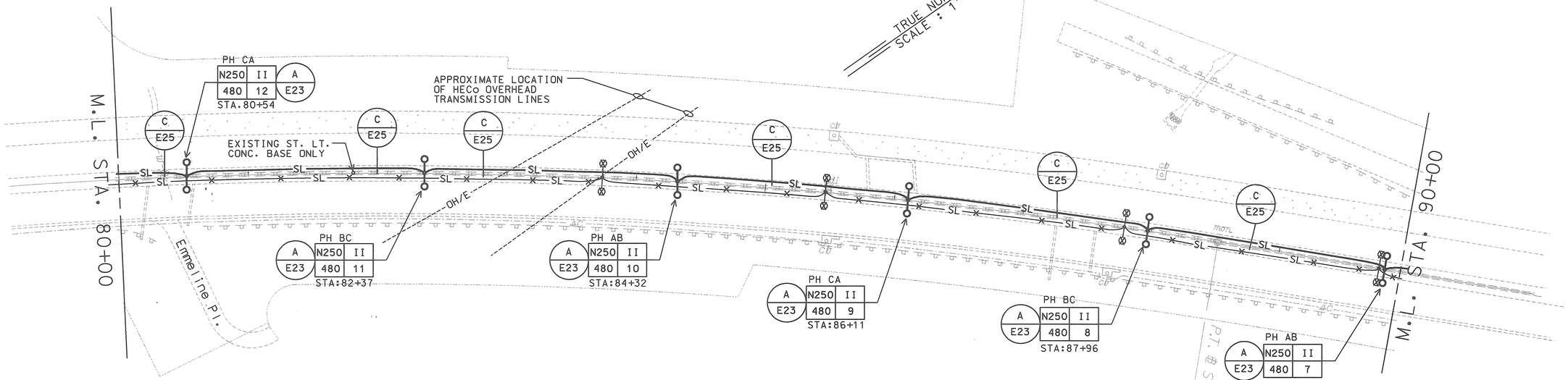

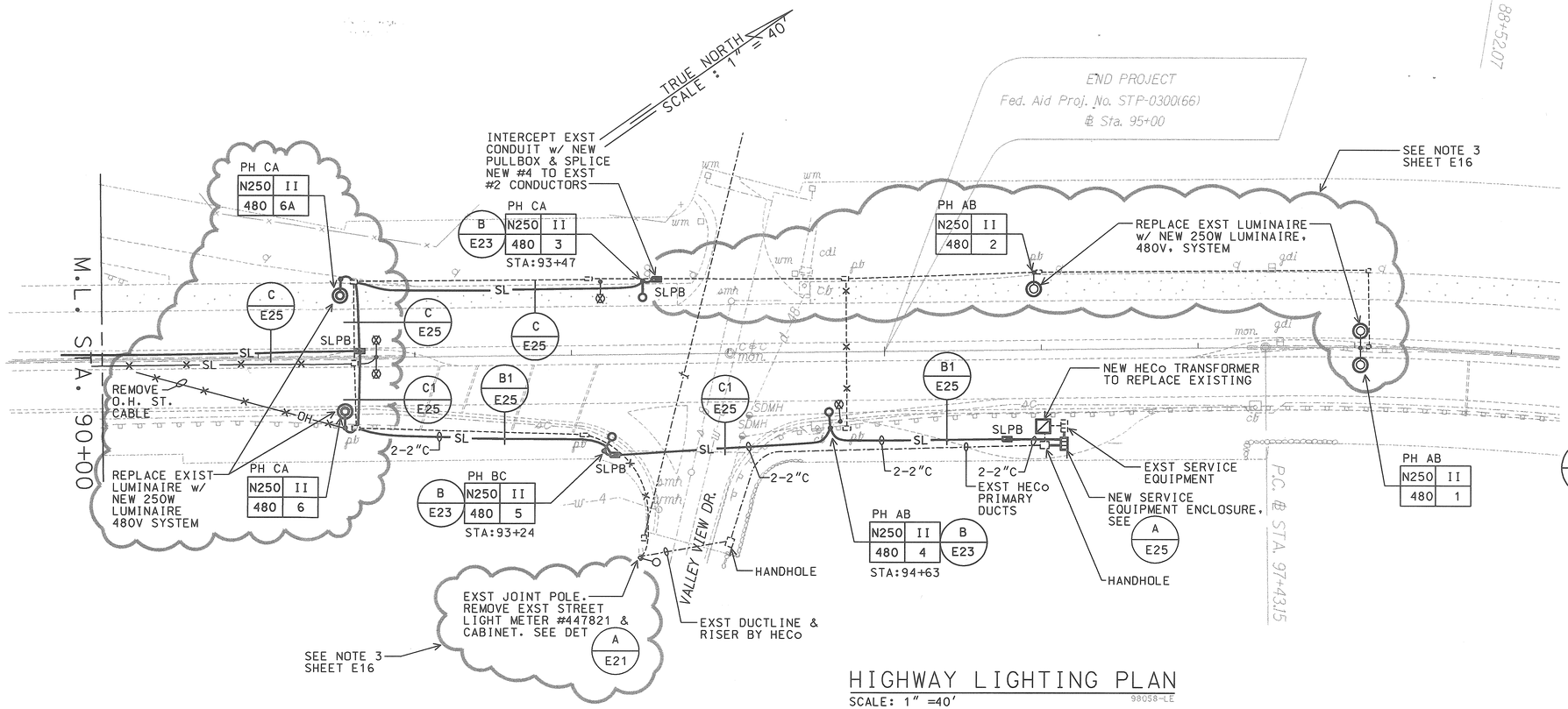

HIGHWAY LIGHTING PLAN

SCALE: 1" =40'

98058-LE

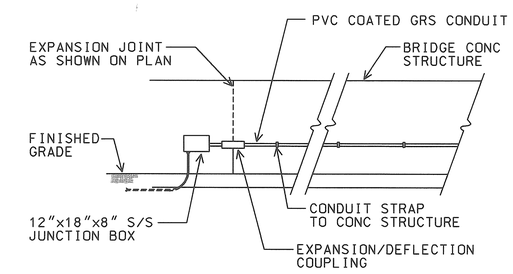

A E20 JUNCTION BOX MOUNTING DETAIL

NTS

98058LDD

AS-BUILT

2/4/03

DATE

R.C. KATAHARA LICENSED PROFESSIONAL ENGINEER No. 3181-E HAWAII, U.S.A.

THIS WORK WAS PREPARED BY ME OR UNDER MY SUPERVISION.

R.C. Katahara 11/25/97

MK ENGINEERS, LTD.

STATE OF HAWAII
DEPARTMENT OF TRANSPORTATION
HIGHWAYS DIVISION

HIGHWAY LIGHTING PLAN

HIGHWAY LIGHTING SAFETY IMPROVEMENTS
LIKELIKE HIGHWAY FROM
SCHOOL STREET TO VALLEY VIEW DRIVE

PROJECT NO. STP-0300(66)

SCALE: AS NOTED DATE: OCTOBER 1998

SHEET No. E20 OF 56 SHEETS

FED. ROAD DIST. NO.	STATE	FED. AID PROJ. NO.	FISCAL YEAR	SHEET NO.	TOTAL SHEETS
HAWAII	HAW.	STP-0300(66)	1998		

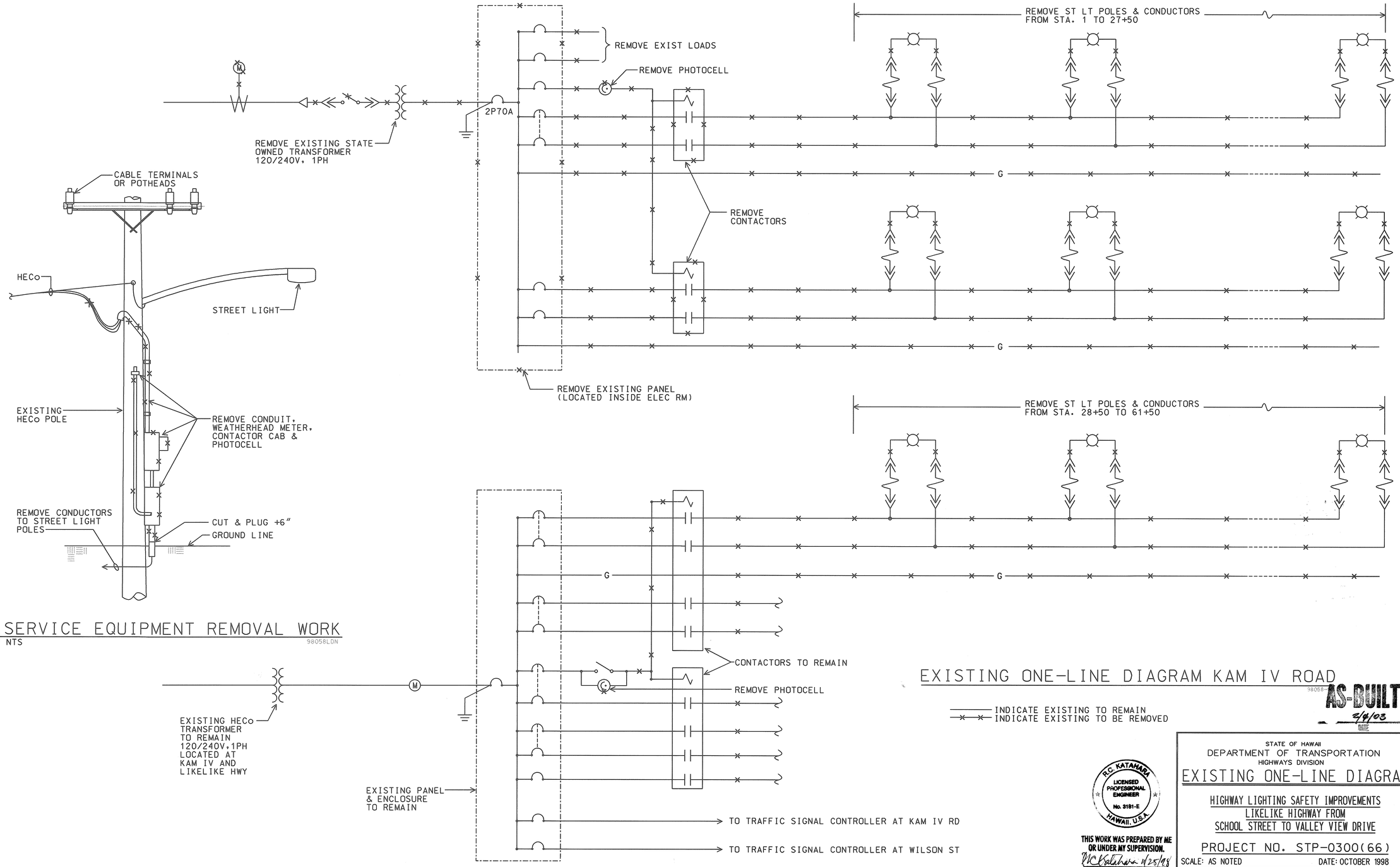

A / E21 SERVICE EQUIPMENT REMOVAL WORK
NTS
98058LDN

EXISTING ONE-LINE DIAGRAM KAM IV ROAD
98058

INDICATE EXISTING TO REMAIN
INDICATE EXISTING TO BE REMOVED

AS-BUILT
2/4/03
DATE

R.C. KATAHARA
LICENSED PROFESSIONAL ENGINEER
No. 3181-E
HAWAII, U.S.A.

THIS WORK WAS PREPARED BY ME OR UNDER MY SUPERVISION.
R.C. Katahara 1/25/98
MK ENGINEERS, LTD.

STATE OF HAWAII
DEPARTMENT OF TRANSPORTATION
HIGHWAYS DIVISION

EXISTING ONE-LINE DIAGRAM

HIGHWAY LIGHTING SAFETY IMPROVEMENTS
LIKELIKE HIGHWAY FROM
SCHOOL STREET TO VALLEY VIEW DRIVE

PROJECT NO. STP-0300(66)

SCALE: AS NOTED DATE: OCTOBER 1998

SHEET No. E21 OF 56 SHEETS

FED. ROAD DIST. NO.	STATE	FED. AID PROJ. NO.	FISCAL YEAR	SHEET NO.	TOTAL SHEETS
HAWAII	HAW.	STP-0300(66)	1998		

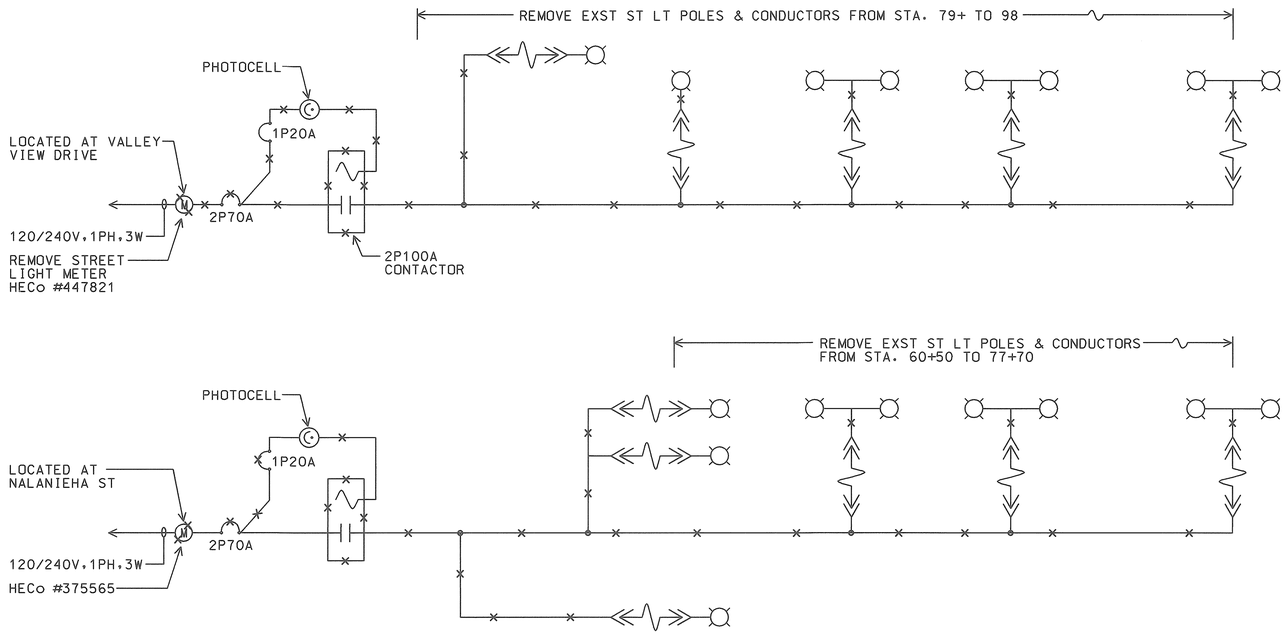

EXISTING ONE-LINE DIAGRAM

98058-4L

INDICATE EXISTING TO REMAIN
INDICATE EXISTING TO BE REMOVED

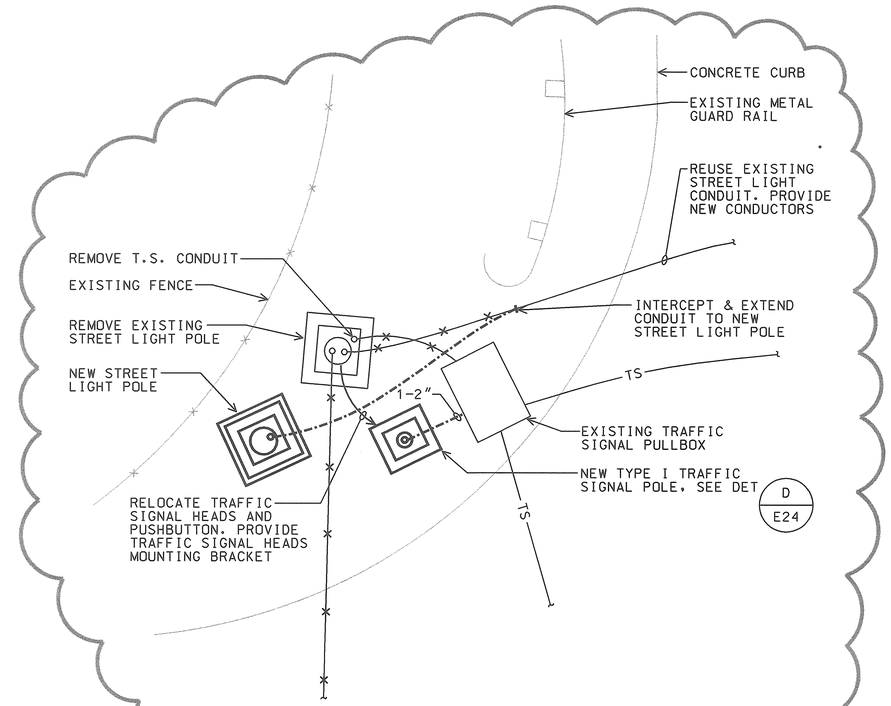

SEE NOTE 3 SHEET E16

A E22 PARTIAL STREET LIGHTING PLAN

SCALE: 1/2" = 1'-0"

98058-DH

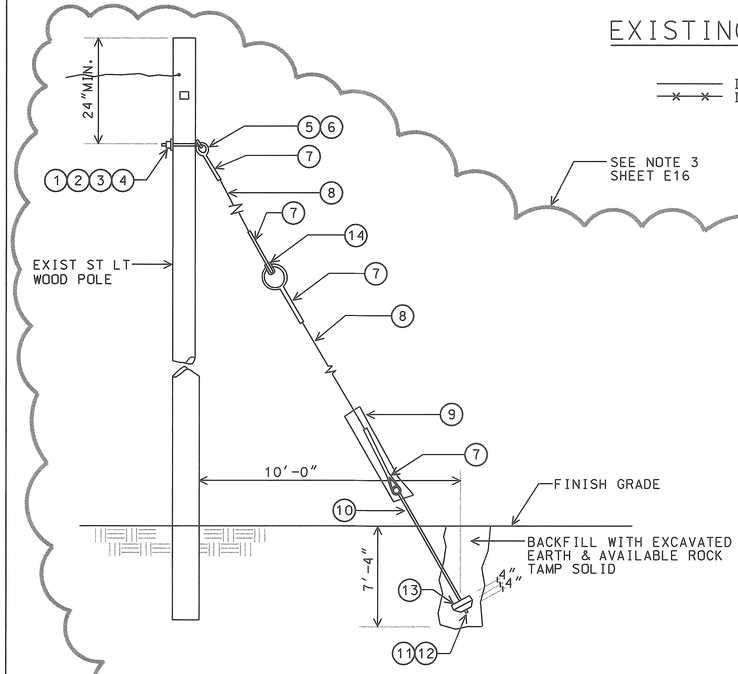

SEE NOTE 3 SHEET E16

ITEM	DESCRIPTION
1	WASHER, ROUND, GALVANIZED, 3/8"
2	NUT, SQUARE HEAD, GALVANIZED, 5/8"
3	M-F LOCKNUT, 5/8"
4	ANGLE THIMBLE EYE BOLT, 5/8"
5	SCREW, LAG, GALVANIZED, 1/2"x4"
6	LIFT PLATE, 3 HOLE, 1/4" STEEL PLATE
7	GUY GRIP, GALVANIZED
8	GALVANIZED STRANDED GUY WIRE, 5/8" DIA.
9	GUY PROTECTOR, 8'-0" PVC OR VINYL
10	ANCHOR ROD, TWIN EYE, 8'-0"x1"
11	WASHER SQUARE, GALVANIZED, 1"
12	NUT, GALVANIZED, SQUARE HEAD, 1"
13	CONCRETE ANCHOR
14	GUY STRAIN INSULATOR

C E22 GUY ANCHOR DETAIL

NTS

98058LD0

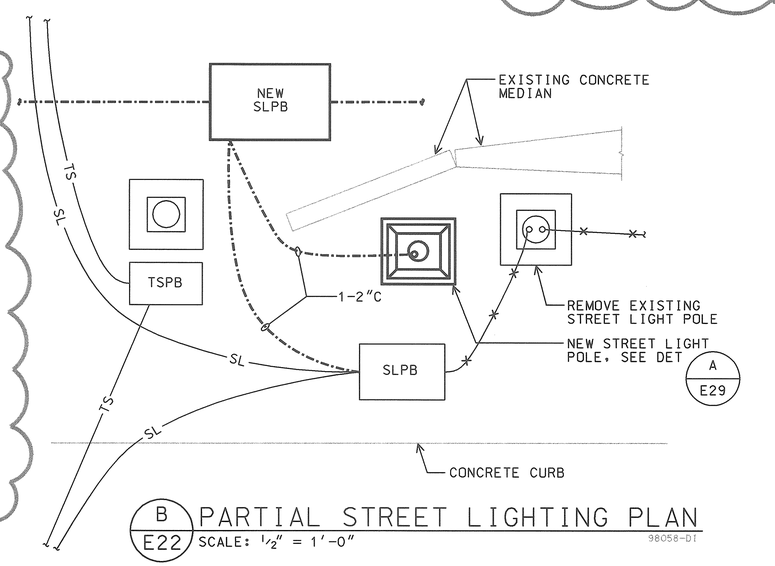

B E22 PARTIAL STREET LIGHTING PLAN

SCALE: 1/2" = 1'-0"

98058-DI

AS-BUILT
2/6/03
DATE

R.C. KATAHARA
LICENSED PROFESSIONAL ENGINEER
No. 3181-E
HAWAII, U.S.A.

THIS WORK WAS PREPARED BY OR UNDER MY SUPERVISION.
R.C. Katahara 4/25/98
MK ENGINEERS, LTD.

STATE OF HAWAII
DEPARTMENT OF TRANSPORTATION
HIGHWAYS DIVISION

EXISTING ONE-LINE DIAGRAM

HIGHWAY LIGHTING SAFETY IMPROVEMENTS
LIKELIKE HIGHWAY FROM
SCHOOL STREET TO VALLEY VIEW DRIVE

PROJECT NO. STP-0300(66)

SCALE: AS NOTED DATE: OCTOBER 1998

SHEET No. E22 OF 56 SHEETS

FED. ROAD DIST. NO.	STATE	FED. AID PROJ. NO.	FISCAL YEAR	SHEET NO.	TOTAL SHEETS
HAWAII	HAW.	STP-0300(66)	1998		

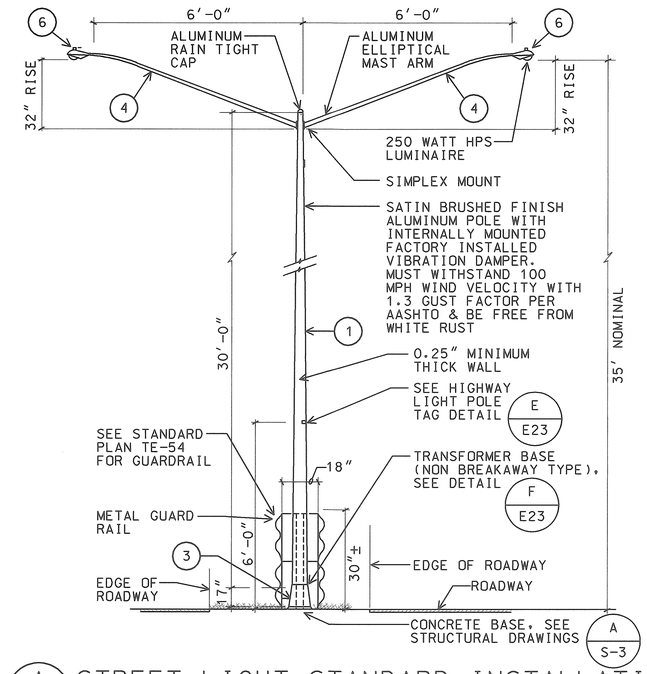

A E23 STREET LIGHT STANDARD INSTALLATION BASE

NTS

98058LDF

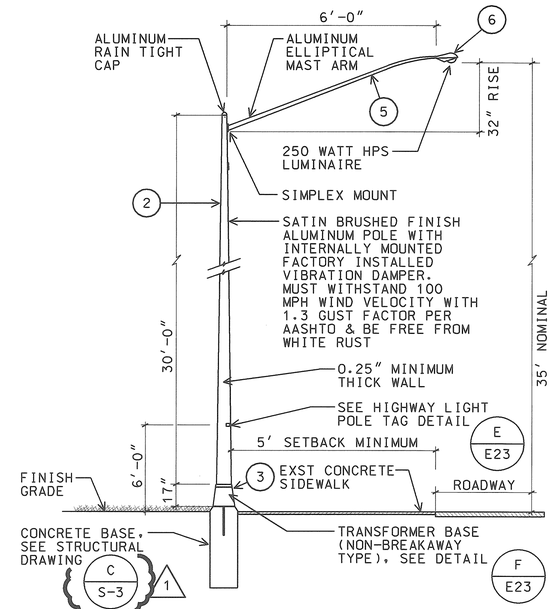

B E23 STREET LIGHT STANDARD INSTALLATION BASE

NTS

98058LDG

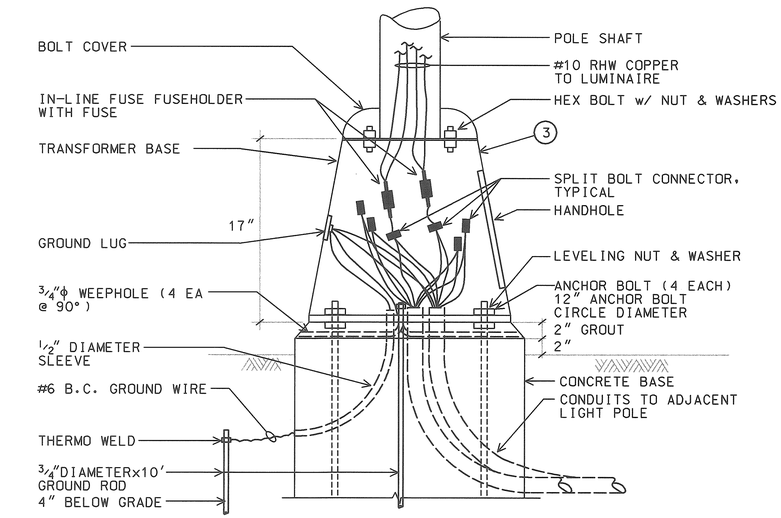

F E23 TYPICAL TRANSFORMER BASE WIRING DETAIL

NTS

98058LDH

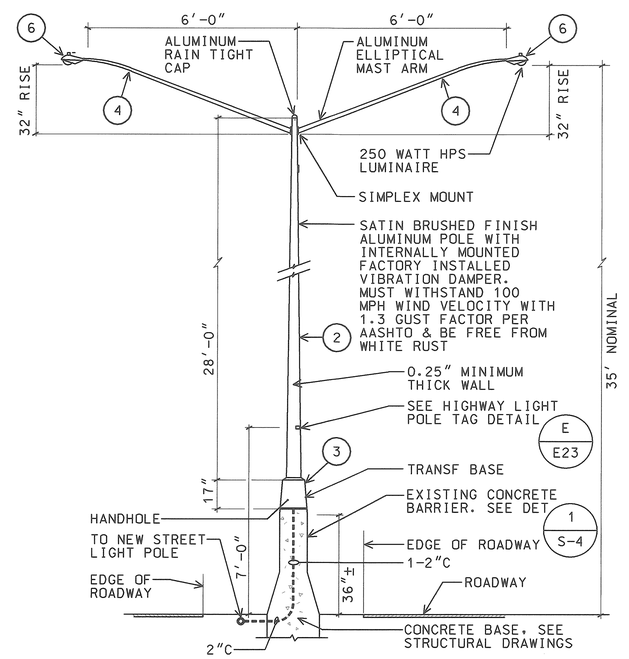

C E23 STREET LIGHT STANDARD ON EXST CONCRETE BARRIER

NTS

98058LDI

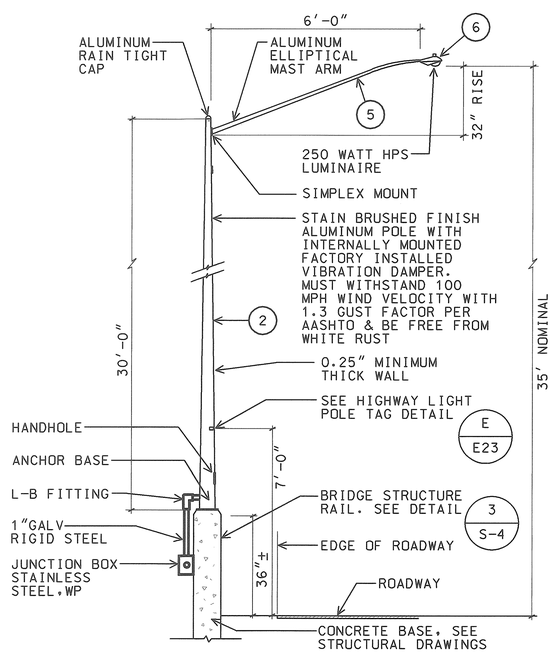

D E23 STREET LIGHT STANDARD ON EXST BRIDGE STRUCTURE

NTS

98058LDJ

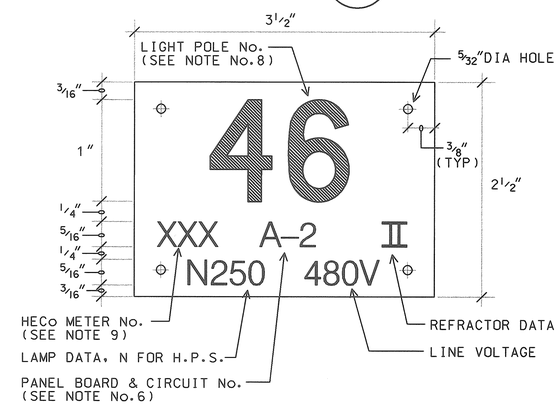

E E23 HIGHWAY LIGHT POLE TAG DETAIL

NTS

98058LDK

NOTES:

1. USE 3 PLY LAMINATED FLEXIBLE PLASTIC BLACK-WHITE-BLACK THICKNESS BLACK CAP SHEET-0.010", WHITE BASE SHEET-0.052", BLACK BASE SHEET-0.010".
2. LIGHT POLE NUMBER SIZE SHALL BE 1" HIGH AND ENGRAVED 1/8" WIDE, WHITE IN COLOR (NUMBER AS REQUIRED).
3. NOMENCLATURE SIZE SHALL BE 5/16" HIGH AND ENGRAVED 1/32" WIDE, WHITE IN COLOR (HECo VAULT NUMBER PANEL BOARD AND CIRCUIT NUMBER, LINE VOLTAGE, LAMP DATA AND REFRACTOR DATA AS REQUIRED.
4. ATTACH TO ALUMINUM AND STEEL POST WITH No. 8 STAINLESS STEEL, 1/2" LONG DRIVE SCREWS IN 1/8" DRILL HOLE. ATTACH TO WOOD POLES WITH 4D ALUMINUM NAIL.
5. NUMBERS ARE INSCRIBED BY CUTTING THROUGH "BLACK CAP SHEET" TO EXPOSE "WHITE LETTERS."
6. NOMENCLATURE REQUIRED FOR SYSTEMS WITH TWO OR MORE CIRCUITS (LETTER INDICATES PANEL BOARD, NUMBER INDICATES CIRCUIT).
7. FOR LIGHT POLES INSTALLED ON RAMP, ASSIGN NUMBERS TO INCLUDE RAMP I.D. AND LIGHT NUMBER. LEGEND MAY BE LESS THAN ONE (1) INCH IN HEIGHT.
8. LIGHT NUMBERS SHALL BE OBTAINED FROM THE STATE. USE AN ALPHABET SUFFIX TO DESIGNATE LIGHTS MOUNTED ON THE SAME POLE (e.g. 123A & 123B).
9. FOR NON-METERED SYSTEM, LEAVE THIS BLOCK BLANK.

98058LDL

MATERIAL LIST

ITEM	DESCRIPTION	MANUFACTURER
1	LIGHT POLE, 28', ALUM	LEXINGTON 2708-45808T4
2	LIGHT POLE, 30', ALUM	LEXINGTON 2908-45808T4
3	TRANSFORMER BASE (ALUM) NON-BREAKAWAY TYPE	LEXINGTON 08R1012S17
4	MAST ARM, 6', ALUM, DOUBLE SIMPLEX MOUNT	LEXINGTON 2MA0632S
5	MAST ARM, 6', ALUM, SINGLE SIMPLEX MOUNT	LEXINGTON 1MA0632S
6	LUMINAIRE, 250W HPS	GENERAL ELECTRIC M4RR-25-S-5-M-1-G-MS2

R.C. KATAHARA LICENSED PROFESSIONAL ENGINEER No. 3181-E HAWAII, U.S.A.

AS-BUILT 2/4/03 DATE

THIS WORK WAS PREPARED BY ME OR UNDER MY SUPERVISION. R.C. Katahara 11/25/97 MK ENGINEERS, LTD.

DATE	REV	DESCRIPTION
8/16/99	1	REVISED DETAIL

STATE OF HAWAII
DEPARTMENT OF TRANSPORTATION
HIGHWAYS DIVISION

STREET LIGHT DETAILS

HIGHWAY LIGHTING SAFETY IMPROVEMENTS
LIKELIKE HIGHWAY FROM
SCHOOL STREET TO VALLEY VIEW DRIVE

PROJECT NO. STP-0300(66)

SCALE: AS NOTED DATE: OCTOBER 1998

SHEET No. E23 OF 56 SHEETS

CO-E23

FED. ROAD DIST. NO.	STATE	FED. AID PROJ. NO.	FISCAL YEAR	SHEET NO.	TOTAL SHEETS
HAWAII	HAW.	STP-0300(66)	1998		

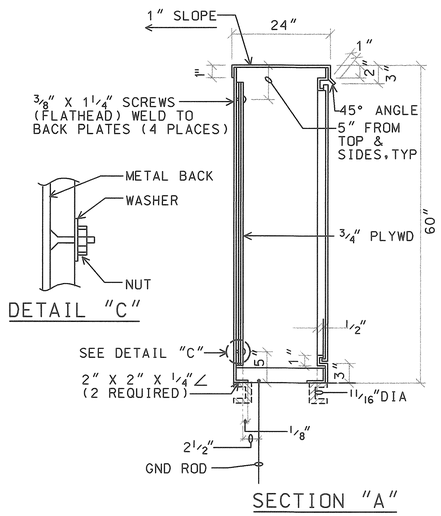

DETAIL "C"

SECTION "A"

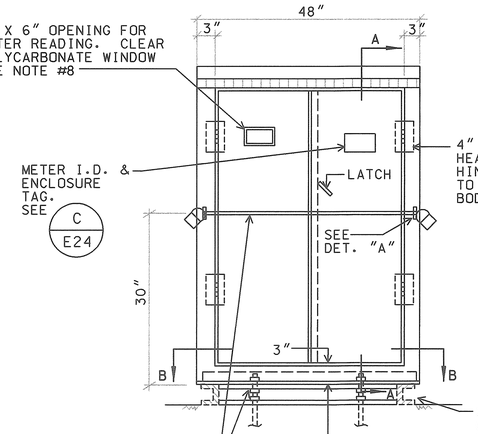

ELEVATION

2" X 4" X 4.5 HOT DIPPED GALV U-CHANNEL BOX FRAME. WASH CHANNEL WITH SOLUTION OF CHEMICAL PHOSPHORIC METAL ETCH & ALLOW TO DRY. APPLY TWO COATS OF GALV. METAL PRIMER & TWO COATS OF ENAMEL TO MATCH CABINET.

1/2"DIA x 1 1/2"L GALV MACHINE BOLTS W/ HEX NUT (4 PLACES MIN.)

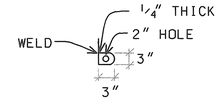

DETAIL "A"
(SIDE VIEW)

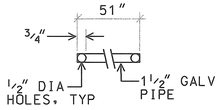

DETAIL "B"

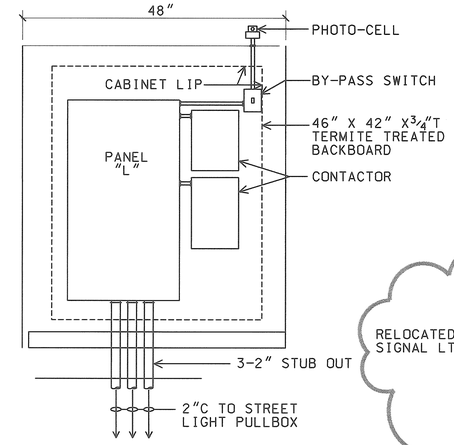

B E24 EQUIPMENT ELEVATION
NTS
98066LDC

NOTES:

1. CABINET TO BE PRIMED WITH ONE COAT SHOP PRIMER.
2. PLYWOOD TO BE 3/4" THICK (MIN.) TREATED (WOLMANIZED) PLYWOOD. (EXTERIOR GRADE)
3. MADE FROM 10 ALUMINUM.
4. PROVIDE ACRYLIC ENAMEL FINISH, COLOR TO MATCH TRANSFORMER. (2 COATS)
5. ENCLOSURE SHALL BE NEMA 3R WITH NEOPRENE GASKETING.
6. PADLOCKS:
   1-HECo FURNISHED
   1-CONTRACTOR FURNISHED, BRASS CORBIN SESAME COMBINATION
7. SHOP FABRICATION DRAWINGS SHALL BE SUBMITTED FOR APPROVAL.
8. LOCATION OF OPENING FOR METER READER TO CORRESPOND WITH LOCATION OF METER.

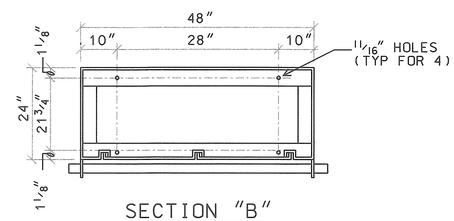

SECTION "B"
(ANGLE FRAME)

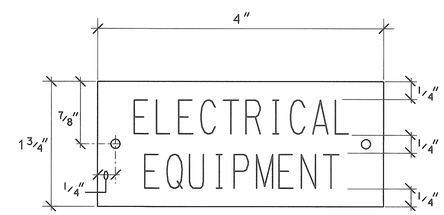

NOTES:

1. USE 2 PLY PLASTIC - BLACK, WHITE.
2. LETTER SIZE SHALL BE 1/2" HIGH AND ENGRAVED 1/16" WIDE, WHITE IN COLOR.
3. ATTACH TO EQUIPMENT ENCLOSURE WITH NO.7 STAINLESS STEEL DRIVE SCREWS.

C E24 METER EQUIPMENT ID TAG DETAIL
NTS
98058LDD

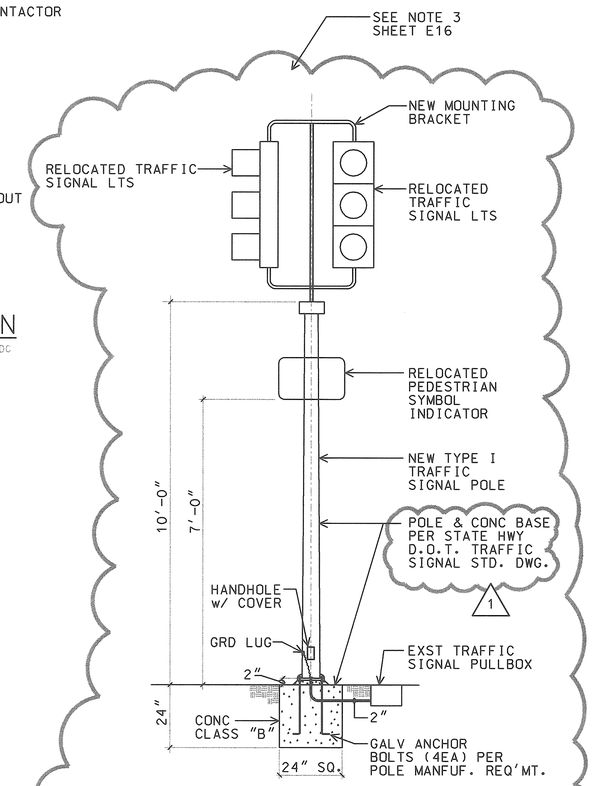

D E24 TRAFFIC SIGNAL POLE DETAIL
NTS
98058LDP

NOTE:
COORDINATE INSTALLATION w/ C & C TRAFFIC DIVISION.

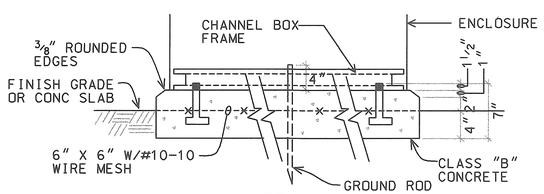

FRONT

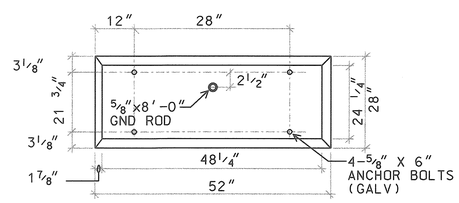

PLAN

CONCRETE PAD

A E24 METER AND EQUIPMENT CABINET
NTS
98058LDB

DATE	REV	DESCRIPTION
8/16/99	1	ADDED DETAIL NOTES

STATE OF HAWAII
DEPARTMENT OF TRANSPORTATION
HIGHWAYS DIVISION

METER DETAILS

HIGHWAY LIGHTING SAFETY IMPROVEMENTS
LIKELIKE HIGHWAY FROM
SCHOOL STREET TO VALLEY VIEW DRIVE

PROJECT NO. STP-0300(66)

SCALE: AS NOTED DATE: OCTOBER 1998

R.C. KATAHARA LICENSED PROFESSIONAL ENGINEER No. 3181-E HAWAII, U.S.A.

AS-BUILT 2/4/03

THIS WORK WAS PREPARED BY ME OR UNDER MY SUPERVISION.
R.C. Katahara 11/23/98
MK ENGINEERS, LTD.

SHEET No. E24 OF 56 SHEETS

CO-E24

FED. ROAD DIST. NO.	STATE	FED. AID PROJ. NO.	FISCAL YEAR	SHEET NO.	TOTAL SHEETS
HAWAII	HAW.	STP-0300(66)	1998		

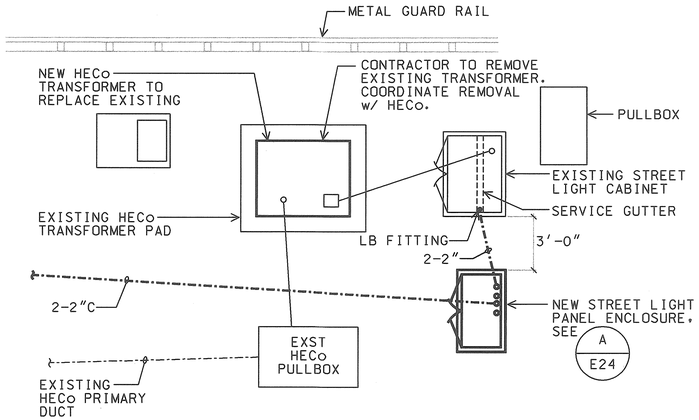

A / E25 SERVICE EQUIPMENT PLAN

SCALE: 1/4" = 1'-0"

98058-LF

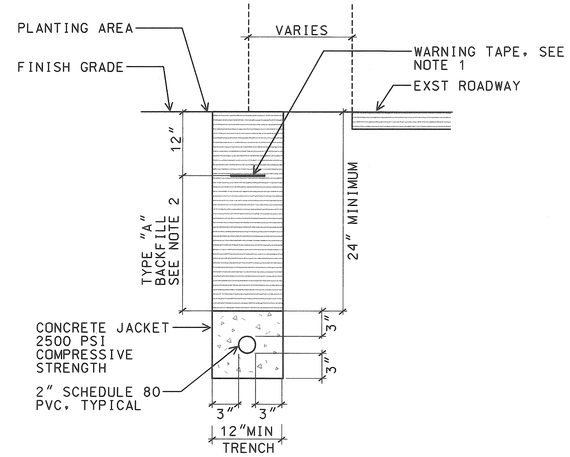

B / E25 CONCRETE ENCASED (NON ROADWAY AREA)

NTS

98058-DG

DUCT SECTION B1 / E25 SIMILAR EXCEPT WITH 2-2"C OR 2-4"C.

NOTES:

1. 8 MIL THICK RED COLORED PLASTIC WARNING TAPE 3" WIDE, ENTIRE LENGTH OF DUCT. TAPE TO HAVE CONTINUOUS METALLIC BACKING AND CORROSION RESISTANT FOIL CORE. WARNING AND IDENTIFICATION TO BE IMPRINTED ON TAPE AND SHALL READ "CAUTION BURIED ELECTRIC CABLE BELOW". MESSAGE SHALL BE REPEATED APPROXIMATELY EVERY TEN FEET.
2. TYPE "A" BACKFILL: BEACH SAND, EARTH OR EARTH AND GRAVEL USED, THE MAXIMUM ROCK SIZE SHALL BE 1" AND THE MIXTURE SHALL CONTAIN NOT MORE THAN 50% BY VOLUME OF ROCK PARTICLES.
3. SAWCUT AT SCORE JOINT. REPLACE CONCRETE SIDEWALK WITHIN THAT AREA. IF SCORE LINE IS LESS THAN 12", SAWCUT THE NEXT CONCRETE SLAB.

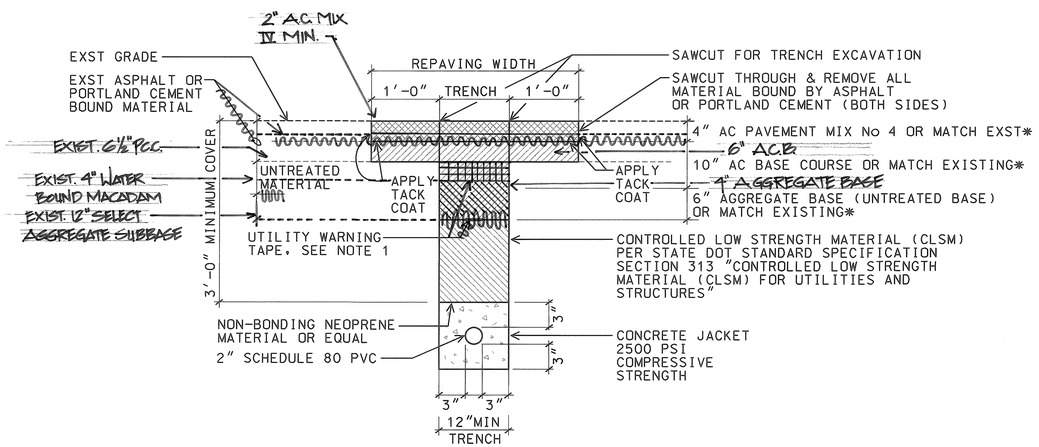

* MINIMUM THICKNESS OR REPLACE TO EXISTING THICKNESS IF GREATER.

C / E25 TYPICAL PAVEMENT RESTORATION IN STATE HIGHWAY

NTS

FOR PALI HWY. & NUUANU AVE. WITH PCC. PAVEMENT.

98058-DG

DUCT SECTION C1 / E25 SIMILAR EXCEPT WITH 2-2"C.

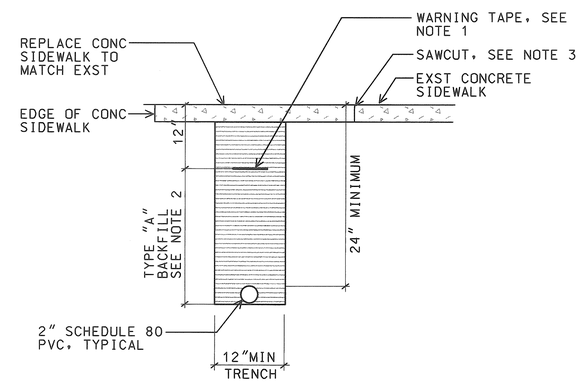

D / E25 DIRECT BURIED CONDUIT (UNDER CONC. SIDEWALK)

NTS

98058-DG

AS-BUILT
2/4/03
DATE

DATE	REV	DESCRIPTION
8/16/99	1	REV. WARNING TAPE

STATE OF HAWAII
DEPARTMENT OF TRANSPORTATION
HIGHWAYS DIVISION

MISCELLANEOUS DETAILS

HIGHWAY LIGHTING SAFETY IMPROVEMENTS
LIKELIKE HIGHWAY FROM
SCHOOL STREET TO VALLEY VIEW DRIVE

PROJECT NO. STP-0300(66)

SCALE: AS NOTED DATE: OCTOBER 1998

R.C. KATAHARA LICENSED PROFESSIONAL ENGINEER No. 3181-E HAWAII, U.S.A.

THIS WORK WAS PREPARED BY ME OR UNDER MY SUPERVISION.
11/25/98
MK ENGINEERS, LTD.

SHEET No. E25 OF 56 SHEETS

CO-E25

FED. ROAD DIST. NO.	STATE	FED. AID PROJ. NO.	FISCAL YEAR	SHEET NO.	TOTAL SHEETS
HAWAII	HAW.	STP-0300(66)	1998		

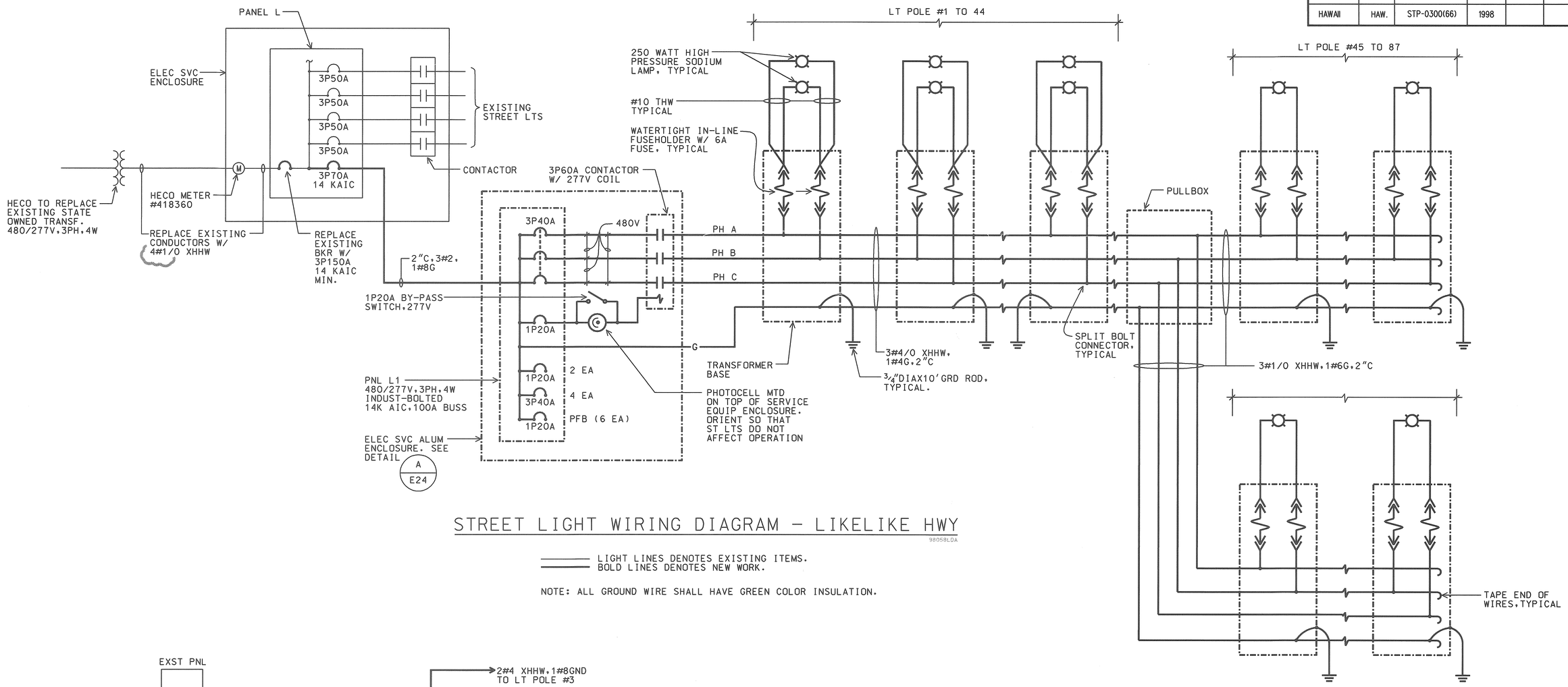

STREET LIGHT WIRING DIAGRAM - LIKELIKE HWY

98058LDA

LIGHT LINES DENOTES EXISTING ITEMS.
BOLD LINES DENOTES NEW WORK.

NOTE: ALL GROUND WIRE SHALL HAVE GREEN COLOR INSULATION.

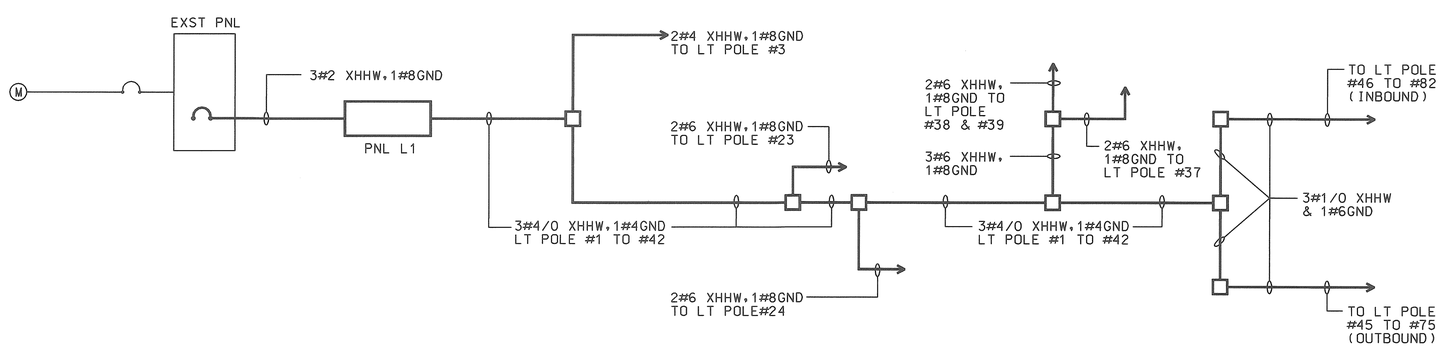

ONE - LINE DIAGRAM

98058LDR

BOLD LINES DENOTES NEW WORK.

AS-BUILT
8/4/03
DATE

R.C. KATAHARA
LICENSED PROFESSIONAL ENGINEER
No. 3191-E
HAWAII, U.S.A.

THIS WORK WAS PREPARED BY ME OR UNDER MY SUPERVISION.
R.C. Katahara 11/25/98
MK ENGINEERS, LTD.

STATE OF HAWAII
DEPARTMENT OF TRANSPORTATION
HIGHWAYS DIVISION

STREET LIGHT WIRING DIAGRAM

HIGHWAY LIGHTING SAFETY IMPROVEMENTS
LIKELIKE HIGHWAY FROM
SCHOOL STREET TO VALLEY VIEW DRIVE

PROJECT NO. STP-0300(66)

SCALE: AS NOTED DATE: OCTOBER 1998

SHEET No. E26 OF 56 SHEETS

FED. ROAD DIST. NO.	STATE	FED. AID PROJ. NO.	FISCAL YEAR	SHEET NO.	TOTAL SHEETS
HAWAII	HAW.	STP-0300(66)	1998		

ELECTRICAL SYMBOLS

- NEW STREET LIGHT STANDARD & CONCRETE BASE WITH DOUBLE ARM & 250W HPS LUMINAIRES. SEE DETAIL A/E29
- STREET LIGHT PULLBOX, SEE DETAIL A/E15
- NEW STREET LIGHT STANDARD & CONCRETE BASE WITH SINGLE ARM & 250W HPS LUMINAIRE, SEE DETAIL B/E23
- REMOVE EXISTING STREET LIGHT POLE. DEMOLISH CONCRETE BASE 24" BELOW FINISH GRADE.
- EXISTING STREET LIGHT LUMINAIRE & BRACKET ARM ON WOOD POLE
- REMOVED EXISTING STREET LIGHT POLE. DEMOLISH CONCRETE BASE 24" BELOW FINISH GRADE
- SL — NEW 2"PVC CONDUIT
- SL — REMOVE EXISTING CONDUCTORS. ABANDON CONDUIT IN PLACE
- OSL — REMOVE EXISTING OVERHEAD STREET LIGHT CONDUCTORS
- J — 12"x18"x8" STAINLESS STEEL WEATHERPROOF NEMA 4X JUNCTION BOX MOUNTED ON CONCRETE STRUCTURE

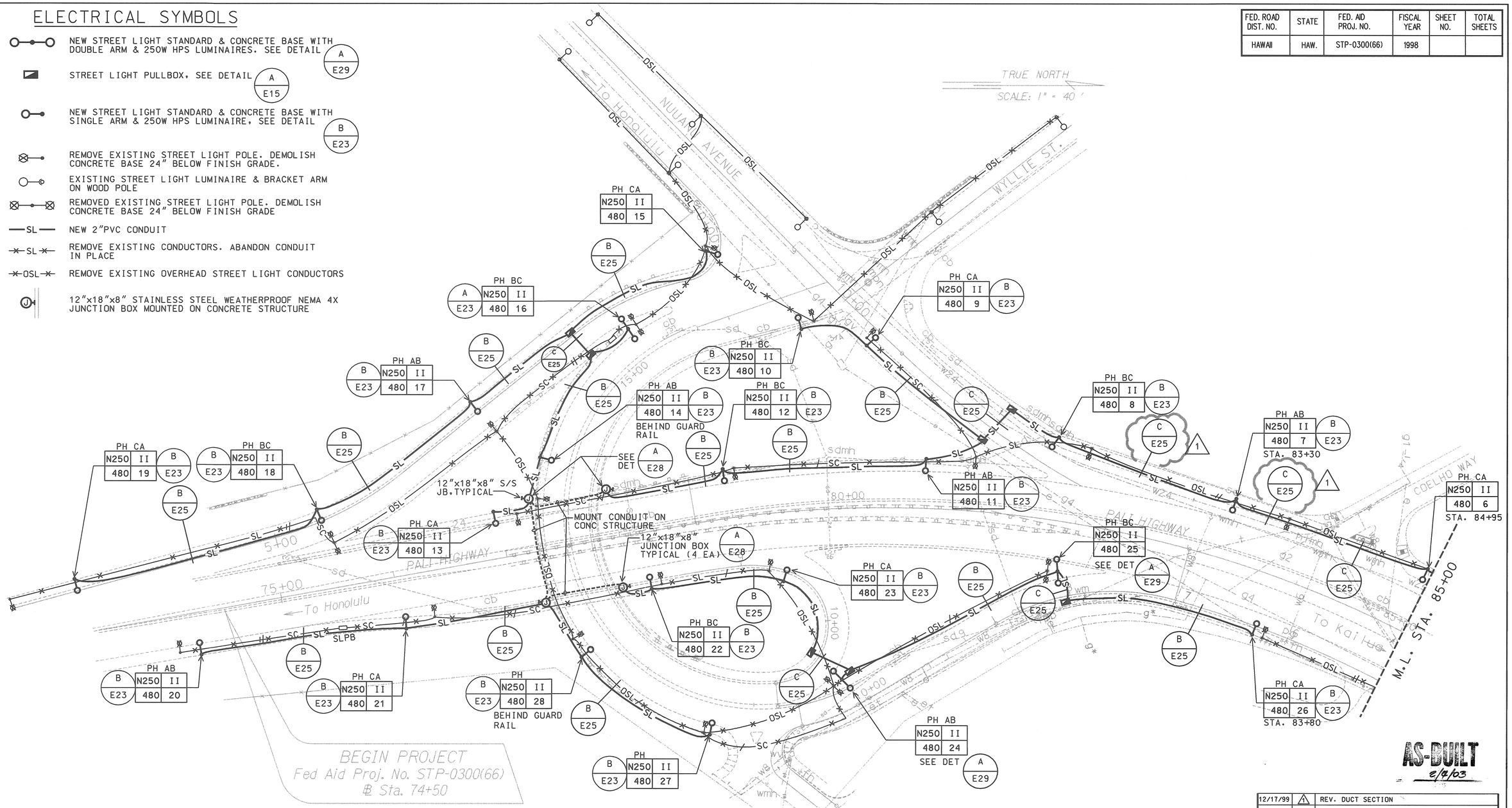

AS-BUILT
2/4/03

HIGHWAY LIGHTING PLAN

SCALE: 1" = 40'

98058-FA

R.C. KATAHARA LICENSED PROFESSIONAL ENGINEER No. 3181-E HAWAII, U.S.A.

THIS WORK WAS PREPARED BY ME OR UNDER MY SUPERVISION.
RC Katahara 11/25/98
MK ENGINEERS, LTD.

DATE	REV	DESCRIPTION
12/17/99	1	REV. DUCT SECTION

STATE OF HAWAII
DEPARTMENT OF TRANSPORTATION
HIGHWAYS DIVISION

HIGHWAY LIGHTING PLAN

HIGHWAY LIGHTING SAFETY IMPROVEMENTS
PALI HIGHWAY
VICINITY OF WYLLIE INTERCHANGE TO JACK LANE

PROJECT NO. STP-0300(66)

SCALE: AS NOTED DATE: OCTOBER 1998

SHEET No. E27 OF 56 SHEETS

FED. ROAD DIST. NO.	STATE	FED. AID PROJ. NO.	FISCAL YEAR	SHEET NO.	TOTAL SHEETS
HAWAII	HAW.	STP-0300(66)	1998		

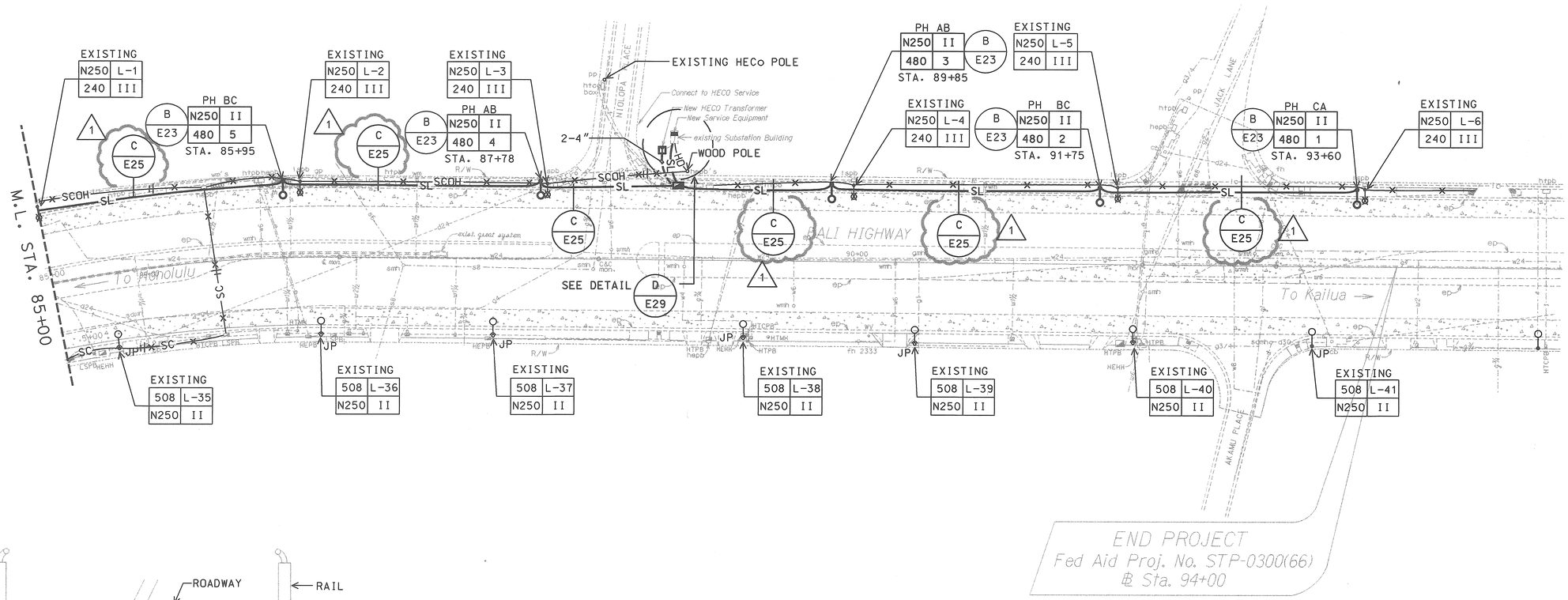

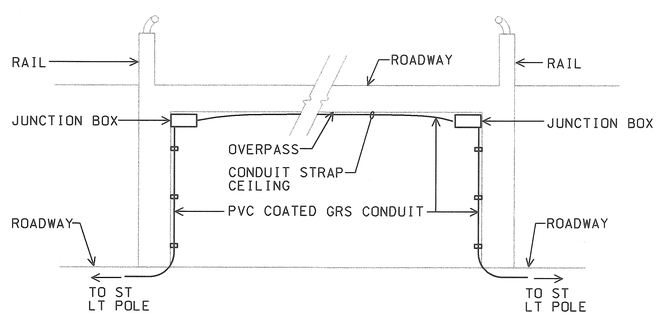

A / E28 JUNCTION BOX MOUNTING DETAIL
NOT TO SCALE
98058FDG

HIGHWAY LIGHTING PLAN

SCALE: 1" = 40'
98058-FB

NOTES:

1. REMOVE EXISTING LT POLES L-1 TO L-6 AND REMOVE WIRES FROM LT POLES L-1 TO L-7. ABANDON CONDUIT IN PLACE.
2. EXISTING L-35 TO L-41 ARE CONNECTED TO HECo SECONDARY CABLES.

AS-BUILT
2/4/03
DATE

DATE	REV	DESCRIPTION
12/17/99	1	REV. DUCT SECTION

R.C. KATAHARA
LICENSED PROFESSIONAL ENGINEER
No. 3181-E
HAWAII, U.S.A.

THIS WORK WAS PREPARED BY ME OR UNDER MY SUPERVISION.
11/25/98
MK ENGINEERS, LTD.

STATE OF HAWAII
DEPARTMENT OF TRANSPORTATION
HIGHWAYS DIVISION

HIGHWAY LIGHTING PLAN

HIGHWAY LIGHTING SAFETY IMPROVEMENTS
PALI HIGHWAY
VICINITY OF WYLLIE INTERCHANGE TO JACK LANE

PROJECT NO. STP-0300(66)

SCALE: AS NOTED
DATE: OCTOBER 1998

SHEET No. E28 OF 56 SHEETS

FED. ROAD DIST. NO.	STATE	FED. AID PROJ. NO.	FISCAL YEAR	SHEET NO.	TOTAL SHEETS
HAWAII	HAW.	STP-0300(66)	1998		

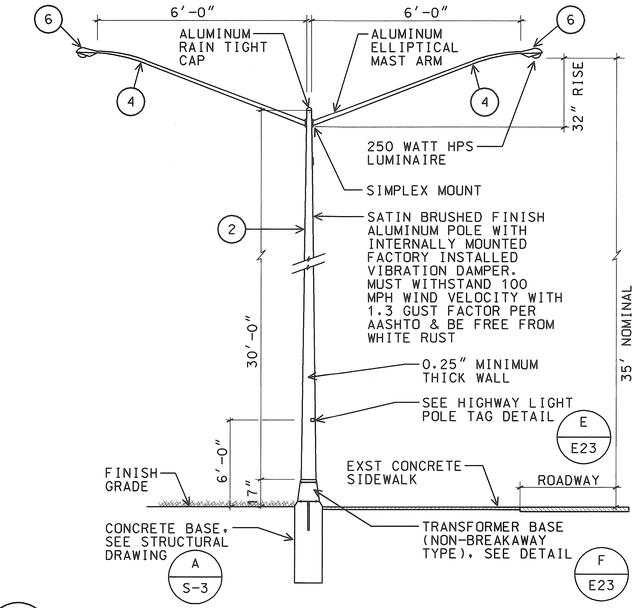

A/E29 STREET LIGHT STANDARD INSTALLATION BASE
NTS
98058FDA

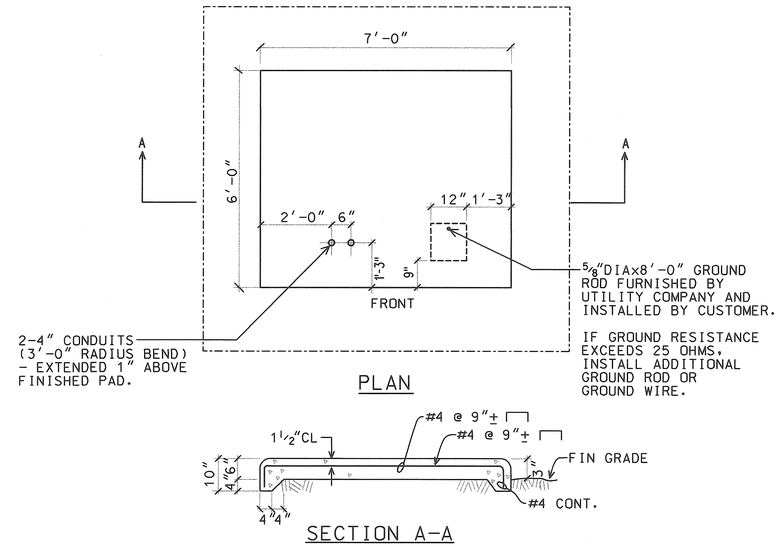

B/E29 3PH TRANSFORMER PAD DETAIL
SCALE: 1/2" = 1'-0"
98058FDB

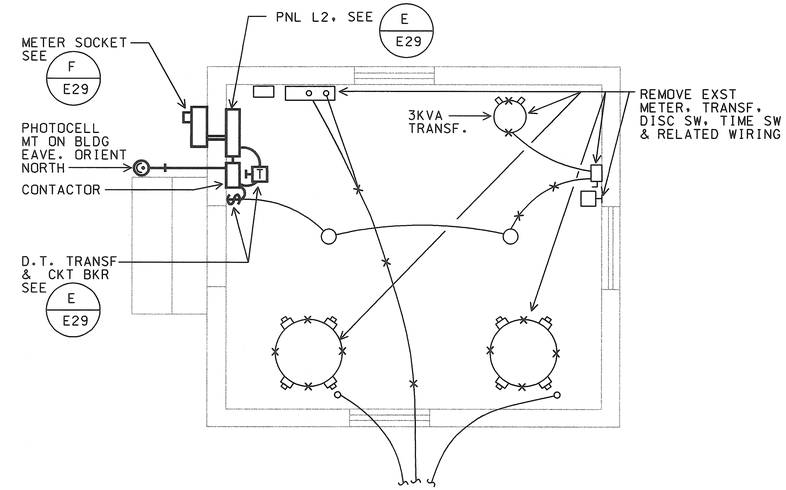

C/E29 SUBSTATION ELECTRICAL PLAN
SCALE: 3/8" = 1'-0"
98058-FC

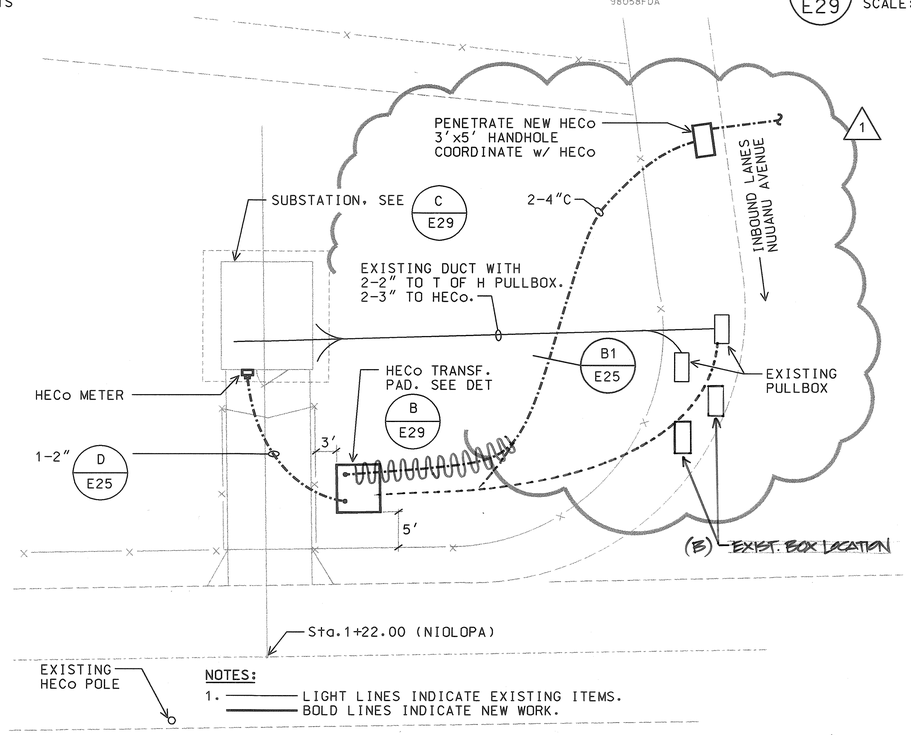

NOTES:
1. ——— LIGHT LINES INDICATE EXISTING ITEMS.
——— BOLD LINES INDICATE NEW WORK.

D/E29 SITE ELECTRICAL PLAN
SCALE: 1" = 10'-0"
98058-FD

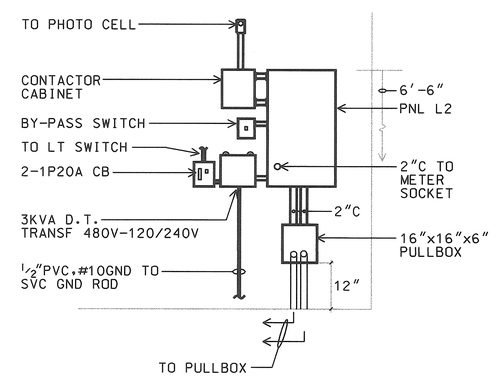

E/E29 ELEC APPARATUS ELEVATION
NTS
98058FDE

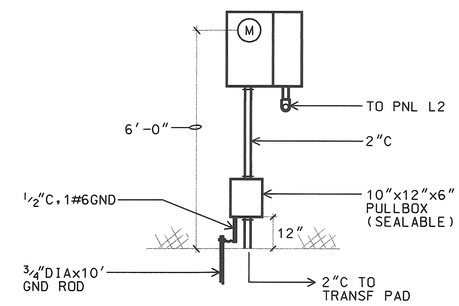

F/E29 SERVICE EQUIPMENT ELEVATION
N.T.S.
98058FDF

DATE	REV	DESCRIPTION
12/17/99	1	REV. LOCATION OF HANDHOLE & DUCTLINE

AS-BUILT
2/4/03

R.C. KATAHARA LICENSED PROFESSIONAL ENGINEER No. 3181-E HAWAII, U.S.A.

THIS WORK WAS PREPARED BY ME OR UNDER MY SUPERVISION.
5/20/04
MK ENGINEERS, LTD.

STATE OF HAWAII
DEPARTMENT OF TRANSPORTATION
HIGHWAYS DIVISION

SUBSTATION PLANS & DETAILS

HIGHWAY LIGHTING SAFETY IMPROVEMENTS
PALI HIGHWAY
VICINITY OF WYLLIE INTERCHANGE TO JACK LANE

PROJECT NO. STP-0300(66)

SCALE: AS NOTED DATE: OCTOBER 1998

SHEET No. E29 OF 56 SHEETS

FED. ROAD DIST. NO.	STATE	FED. AID PROJ. NO.	FISCAL YEAR	SHEET NO.	TOTAL SHEETS
HAWAII	HAW.	STP-0300(66)	1998		

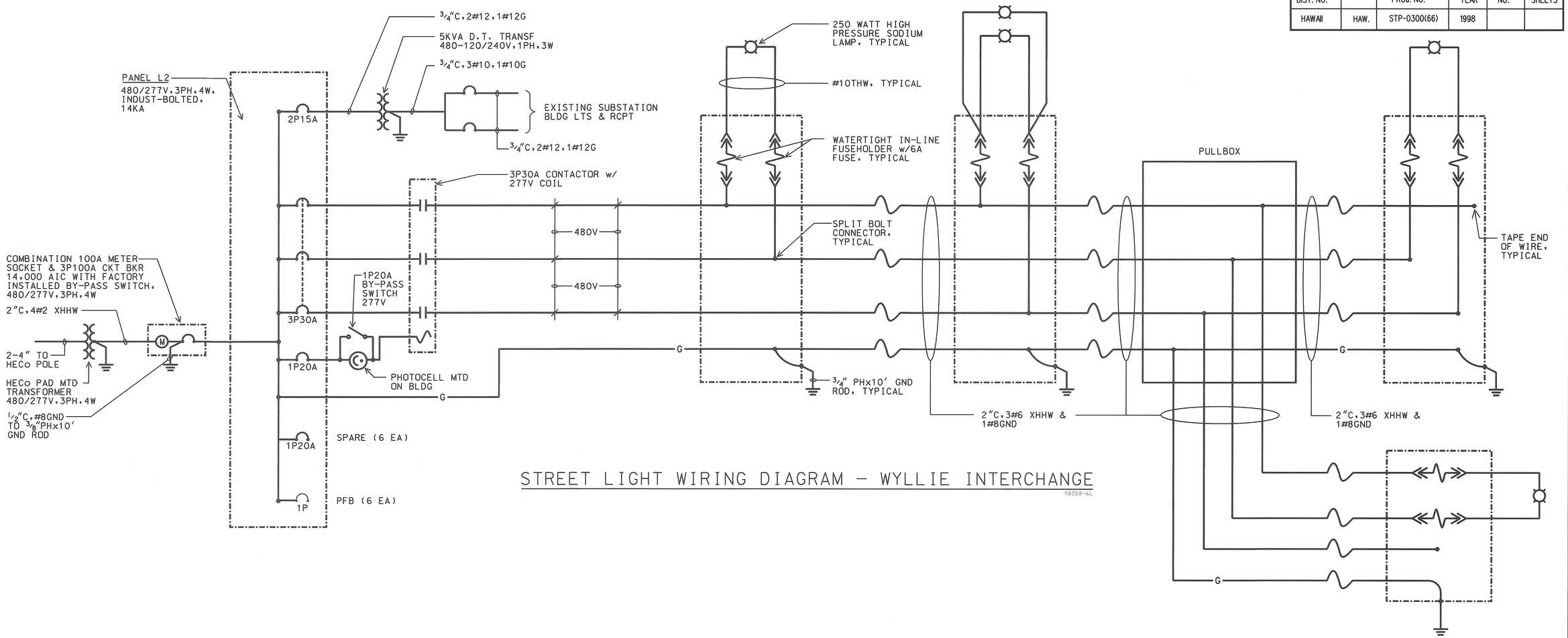

STREET LIGHT WIRING DIAGRAM - WYLLIE INTERCHANGE

98058-6L

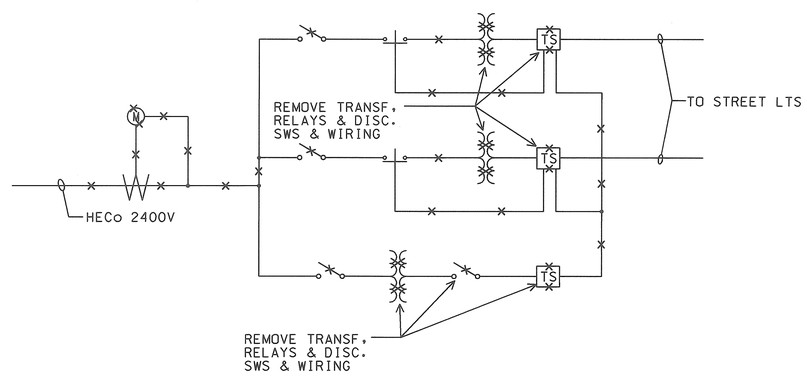

DEMOLITION SERIES CIRCUIT ONE-LINE DIAGRAM

98058FDC

AS-BUILT
2/4/03
DATE

R.C. KATAHARA
LICENSED PROFESSIONAL ENGINEER
No. 3181-E
HAWAII, U.S.A.

THIS WORK WAS PREPARED BY ME OR UNDER MY SUPERVISION.
R.C. Katahara 11/25/98
MK ENGINEERS, LTD.

STATE OF HAWAII
DEPARTMENT OF TRANSPORTATION
HIGHWAYS DIVISION

WIRING DIAGRAM

HIGHWAY LIGHTING SAFETY IMPROVEMENTS
PALI HIGHWAY
VICINITY OF WYLLIE INTERCHANGE TO JACK LANE

PROJECT NO. STP-0300(66)

SCALE: AS NOTED DATE: OCTOBER 1998

SHEET No. E30 OF 56 SHEETS

FED. ROAD DIST. NO.	STATE	FED. AID PROJ. NO.	FISCAL YEAR	SHEET NO.	TOTAL SHEETS
HAWAII	HAW.	STP-0300(66)	1998		

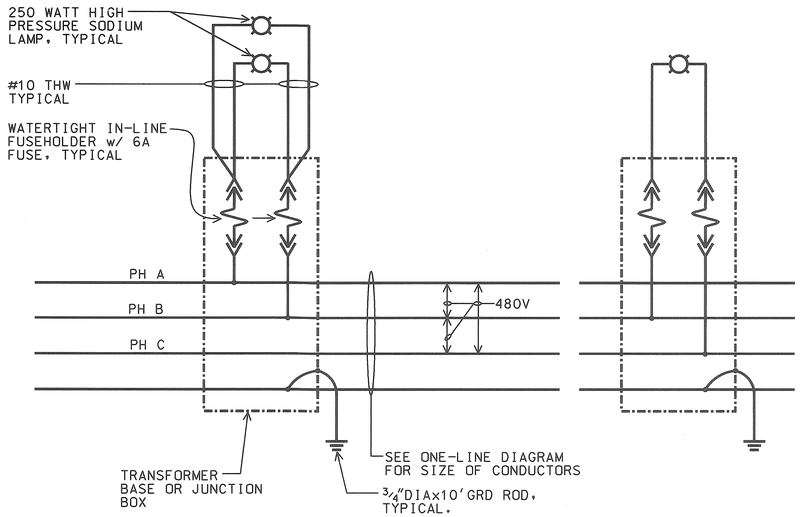

A / E31 TYPICAL STREET LIGHT WIRING DIAGRAM

98058KDI

LIGHT LINES DENOTES EXISTING ITEMS.
BOLD LINES DENOTES NEW WORK.

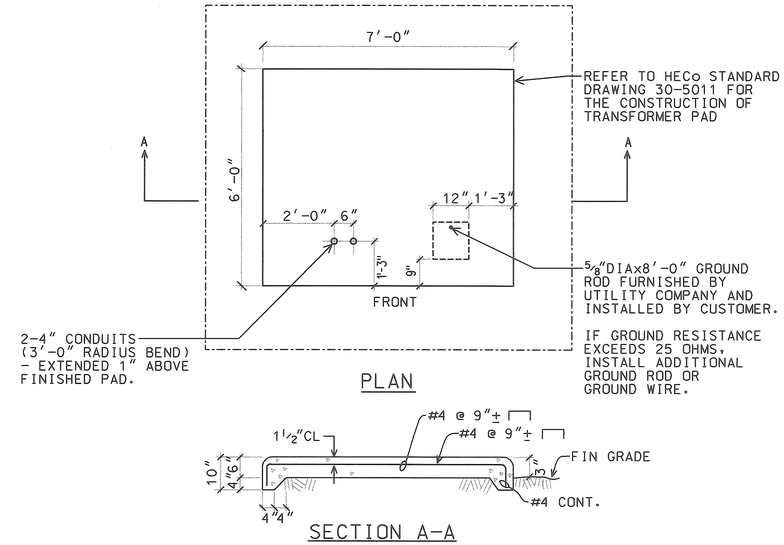

B / E31 3PH TRANSFORMER PAD DETAIL

SCALE: 1/2" = 1'-0"

98058KDJ

ELECTRICAL SYMBOLS

- NEW STREET LIGHT STANDARD & CONCRETE BASE WITH SINGLE ARM & 250W HPS LUMINAIRE. SEE DETAIL B/E46
- NEW STREET LIGHT STANDARD & CONCRETE BASE WITH DOUBLE ARM & 250W HPS LUMINAIRES. SEE DETAIL A/E46
- REMOVE EXISTING STREET LIGHT STANDARD
- EXISTING STREET LIGHT STANDARD TO REMAIN
- NEW STREET LIGHT PULLBOX. SEE DETAIL A/E49
- NEW STAINLESS STEEL JUNCTION BOX, WATERPROOF, NEMA 4X, 12"x18"x8", MOUNTED ON STRUCTURE
- NEW STREET LIGHT STANDARD WITH DOUBLE ARM & 250W LUMINAIRES TO REPLACE EXISTING ON CONCRETE MEDIAN. SEE DETAIL C/E46
- NEW STREET LIGHT STANDARD ON EXISTING GUARD RAIL WITH SINGLE ARM & 250W LUMINAIRES. SEE DETAIL D/E46 D/E48
- —SL— NEW STREET LIGHT CONDUIT, 2"PVC. SEE DETAIL A/E48 B/E48
- —ESL— EXISTING STREET LIGHT CONDUIT WITH CONDUCTORS TO REMAIN
- —SL— REMOVE EXISTING CONDUCTORS. ABANDON CONDUIT IN PLACE
- (J) EXISTING JUNCTION BOX
- ---SL--- STREET LIGHT, 2" PVC COATED GALVANIZED RIGID STEEL CONDUIT, SURFACE MOUNTED ON CONCRETE STRUCTURE. SEE D/E48
- —SL— EXISTING STREET LIGHT CONDUIT w/ NEW CONDUCTORS. SEE ONE-LINE DIAGRAM FOR SIZE & QUANTITY. MANDREL TEST PER SPEC SECTION 622.03(A)(3).

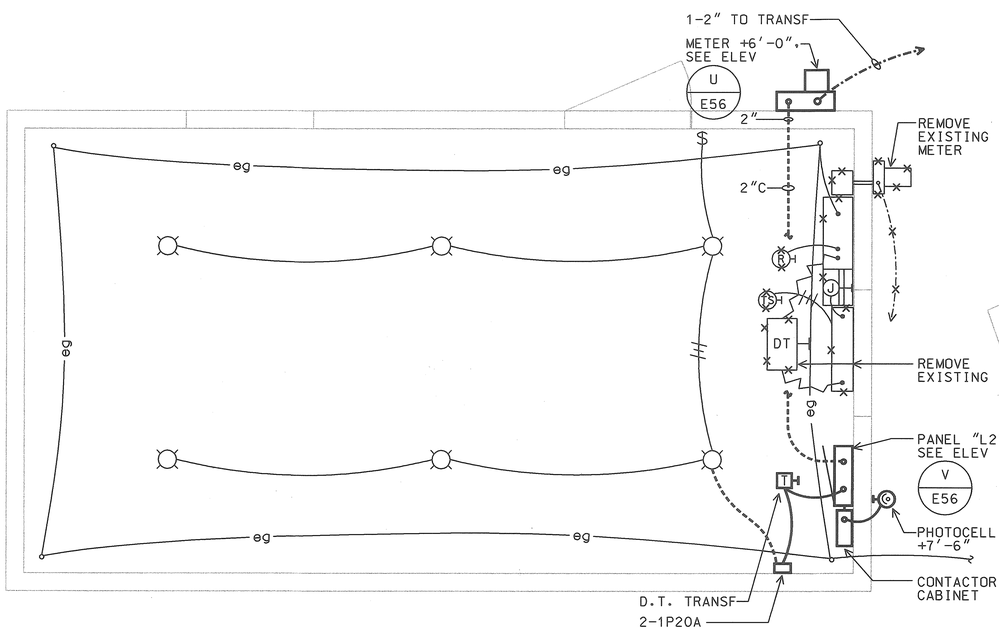

C / E31 UNIVERSITY TRANSFORMER SUBSTATION ELECTRICAL PLAN

SCALE: 1/2" = 1'-0"

98058KDM

NOTE:
1. SEE SHEET E-

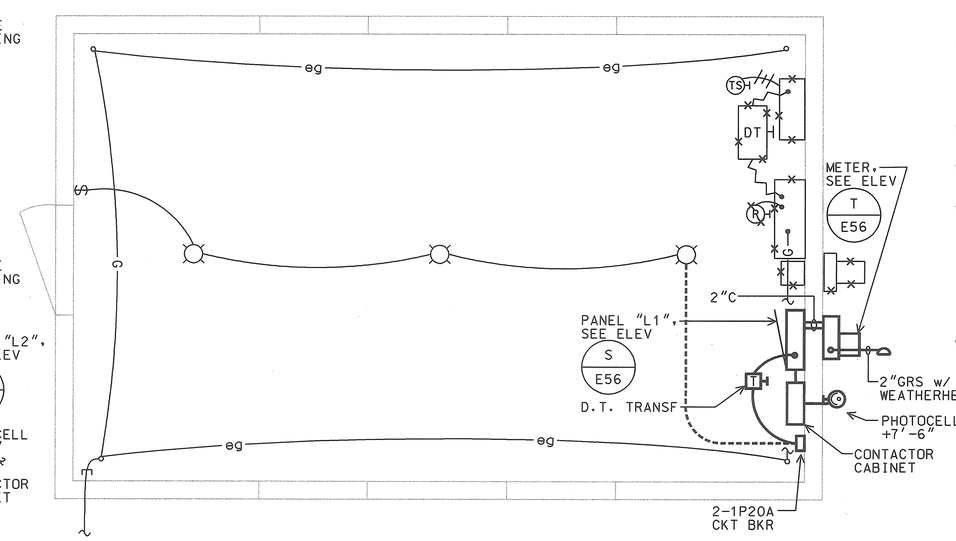

D / E31 MAKIKI TRANSFORMER SUBSTATION ELECTRICAL PLAN

SCALE: 1/2" = 1'-0"

98058KDJ

CONSTRUCTION NOTES:

1. REPLACE EXISTING STREET LIGHT STANDARD WITH NEW, AND PROVIDE NEW CONCRETE BASE. REPLACE EXISTING CONDUCTORS WITH NEW. SEE ONE-LINE DIAGRAM FOR SIZE AND QUANTITY OF CONDUCTORS.
2. PENETRATE EXISTING PULLBOX & SPLICE NEW CONDUCTORS TO EXISTING AS SHOWN.
3. RE-USE EXISTING CONDUIT, REPLACE EXISTING WITH NEW CONDUCTORS. MANDREL TEST PER SPEC SECTION 622.03(A)(3).
4. PENETRATE EXISTING PULLBOX. PROVIDE WIRING TO NEW 3KVA DRY TYPE TRANSFORMER 480V-120/240V,1PH,3W IN ENCLOSURE (NEMA 3R) MOUNTED ON THE SIGN STRUCTURE FOR THE EXISTING SIGN LIGHTING SYSTEM. SEE A/E38
5. INTERCEPT & EXTEND EXISTING CONDUIT TO NEW STREET LIGHT STANDARD. PROVIDE NEW CONDUCTORS TO EXISTING STREET LIGHT STANDARD.

AS-BUILT 2/4/03

THIS WORK WAS PREPARED BY ME OR UNDER MY SUPERVISION.
MK ENGINEERS, LTD. 11/25/98

R.S. KATAHARA LICENSED PROFESSIONAL ENGINEER No. 3181-E HAWAII, U.S.A.

STATE OF HAWAII
DEPARTMENT OF TRANSPORTATION
HIGHWAYS DIVISION

SYMBOLS, NOTES, DIAGRAM & SUBSTATION ELECTRICAL PLAN

HIGHWAY LIGHTING SAFETY IMPROVEMENTS
INTERSTATE ROUTE H-1
KEEAUMOKU STREET TO AINAKOA AVE

PROJECT NO. STP-0300(66)

SCALE: AS NOTED DATE: JANUARY 1999

FED. ROAD DIST. NO.	STATE	FED. AID PROJ. NO.	FISCAL YEAR	SHEET NO.	TOTAL SHEETS
HAWAII	HAW.	STP-0300(66)	1998		

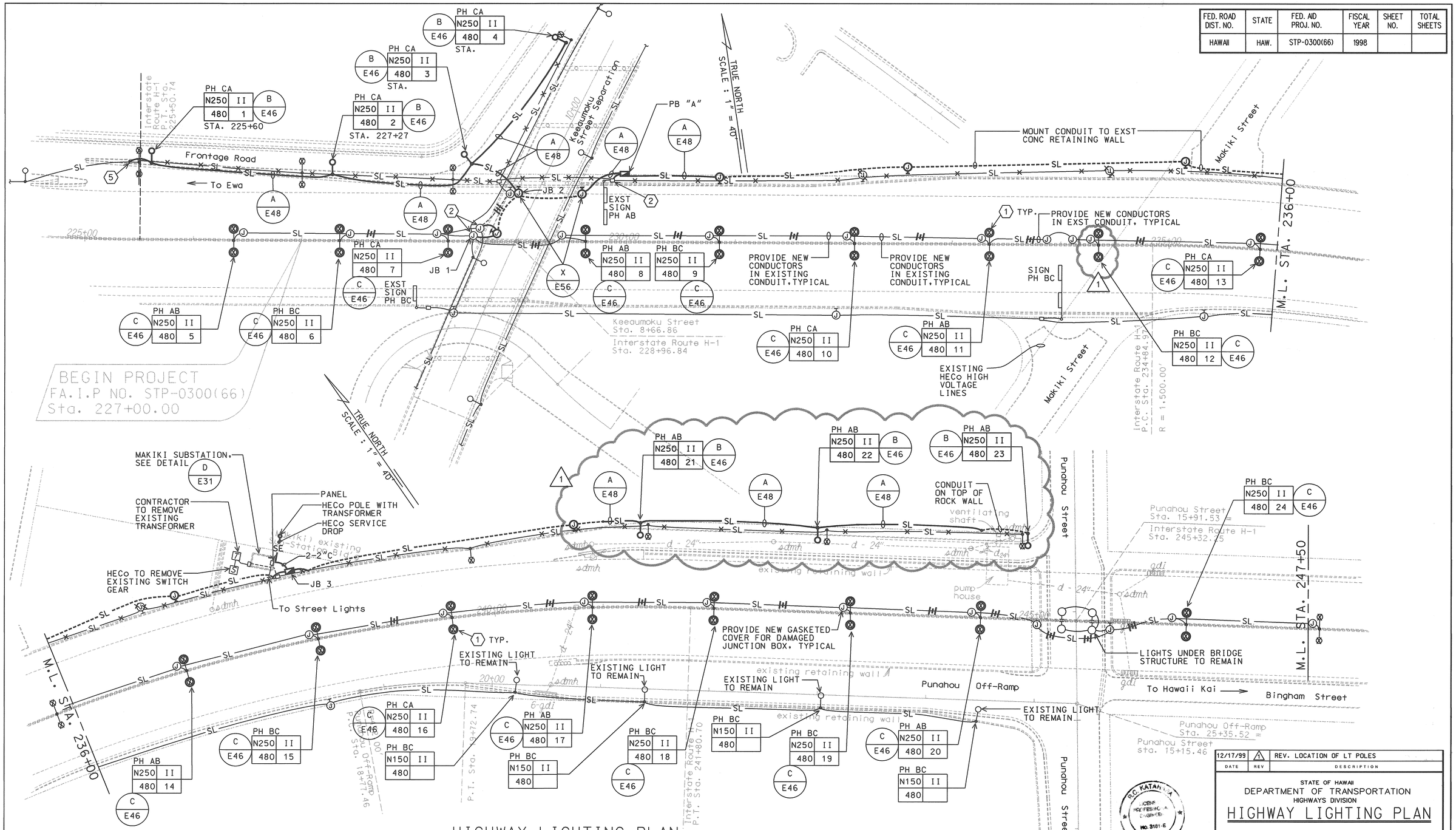

HIGHWAY LIGHTING PLAN
SCALE: 1" = 40'

98058-KA

AS BUILT
2/4/03

DATE	REV	DESCRIPTION
12/17/99	1	REV. LOCATION OF LT POLES

STATE OF HAWAII
DEPARTMENT OF TRANSPORTATION
HIGHWAYS DIVISION

HIGHWAY LIGHTING PLAN

HIGHWAY LIGHTING SAFETY IMPROVEMENTS
INTERSTATE ROUTE H-1
KEEAUMOKU STREET TO AINAKOA AVE

PROJECT NO. STP-0300(66)

SCALE: AS NOTED DATE: JANUARY 1999

R.C. KATAHIRA LICENSED PROFESSIONAL ENGINEER NO. 3181-E HAWAII, U.S.A.

THIS WORK WAS PREPARED BY ME OR UNDER MY SUPERVISION.
5/20/04
HK ENGINEERS, LTD.

SHEET No. E32 OF 56 SHEETS

FED. ROAD DIST. NO.	STATE	FED. AID PROJ. NO.	FISCAL YEAR	SHEET NO.	TOTAL SHEETS
HAWAII	HAW.	STP-0300(66)	1998		

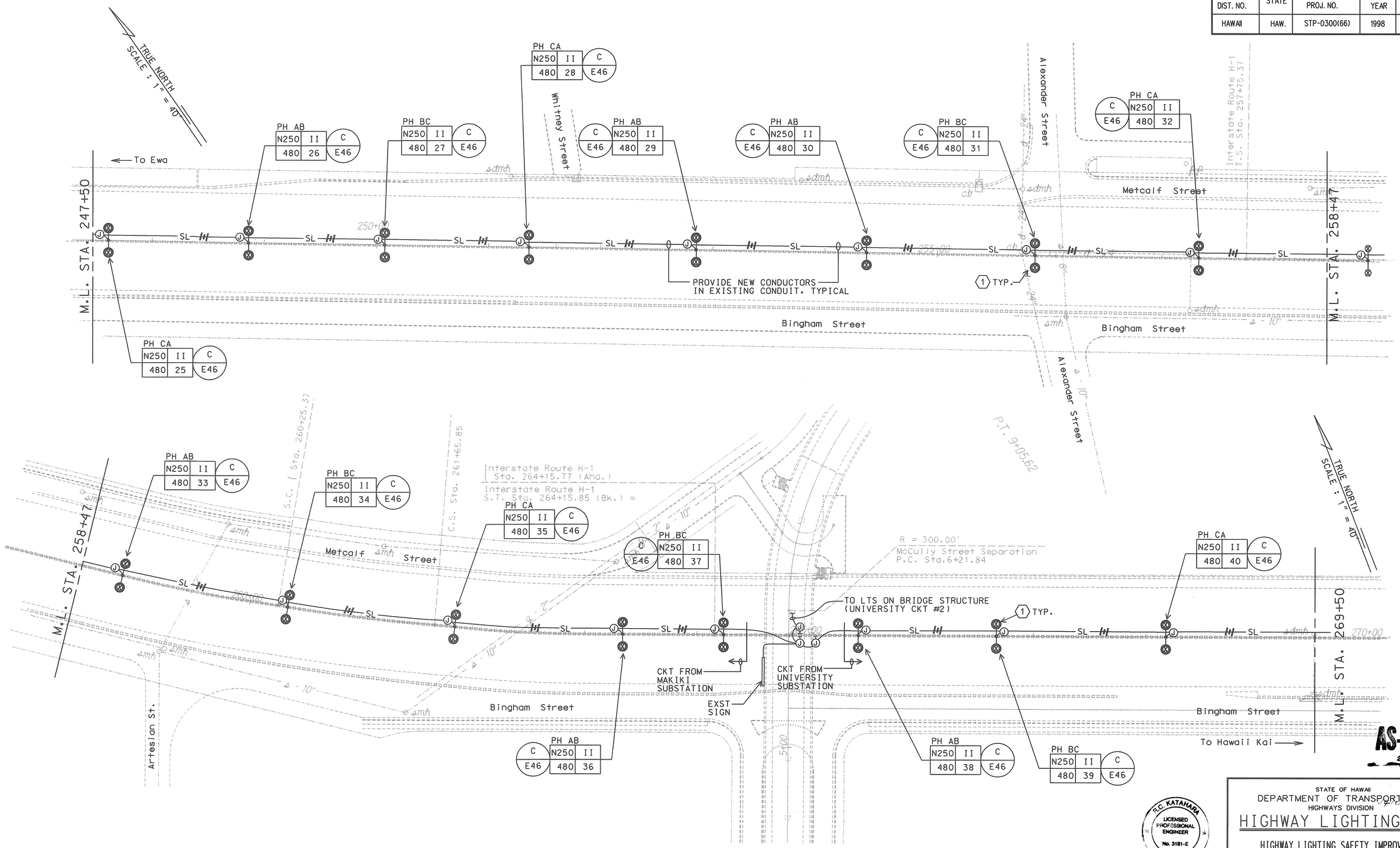

AS-BUILT
2/4/03
DATE

HIGHWAY LIGHTING PLAN

SCALE: 1" = 40'

98058-KB

R.C. KATAHARA
LICENSED PROFESSIONAL ENGINEER
No. 3181-E
HAWAII, U.S.A.

THIS WORK WAS PREPARED BY ME OR UNDER MY SUPERVISION.

R.C. Katahara 1/25/98

MK ENGINEERS, LTD.

STATE OF HAWAII
DEPARTMENT OF TRANSPORTATION
HIGHWAYS DIVISION

HIGHWAY LIGHTING PLAN

HIGHWAY LIGHTING SAFETY IMPROVEMENTS
INTERSTATE ROUTE H-1
KEEAUMOKU STREET TO AINAKOA AVE

PROJECT NO. STP-0300(66)

SCALE: AS NOTED DATE: JANUARY 1999

SHEET No. E33 OF 56 SHEETS

FED. ROAD DIST. NO.	STATE	FED. AID PROJ. NO.	FISCAL YEAR	SHEET NO.	TOTAL SHEETS
HAWAII	HAW.	STP-0300(66)	1998		

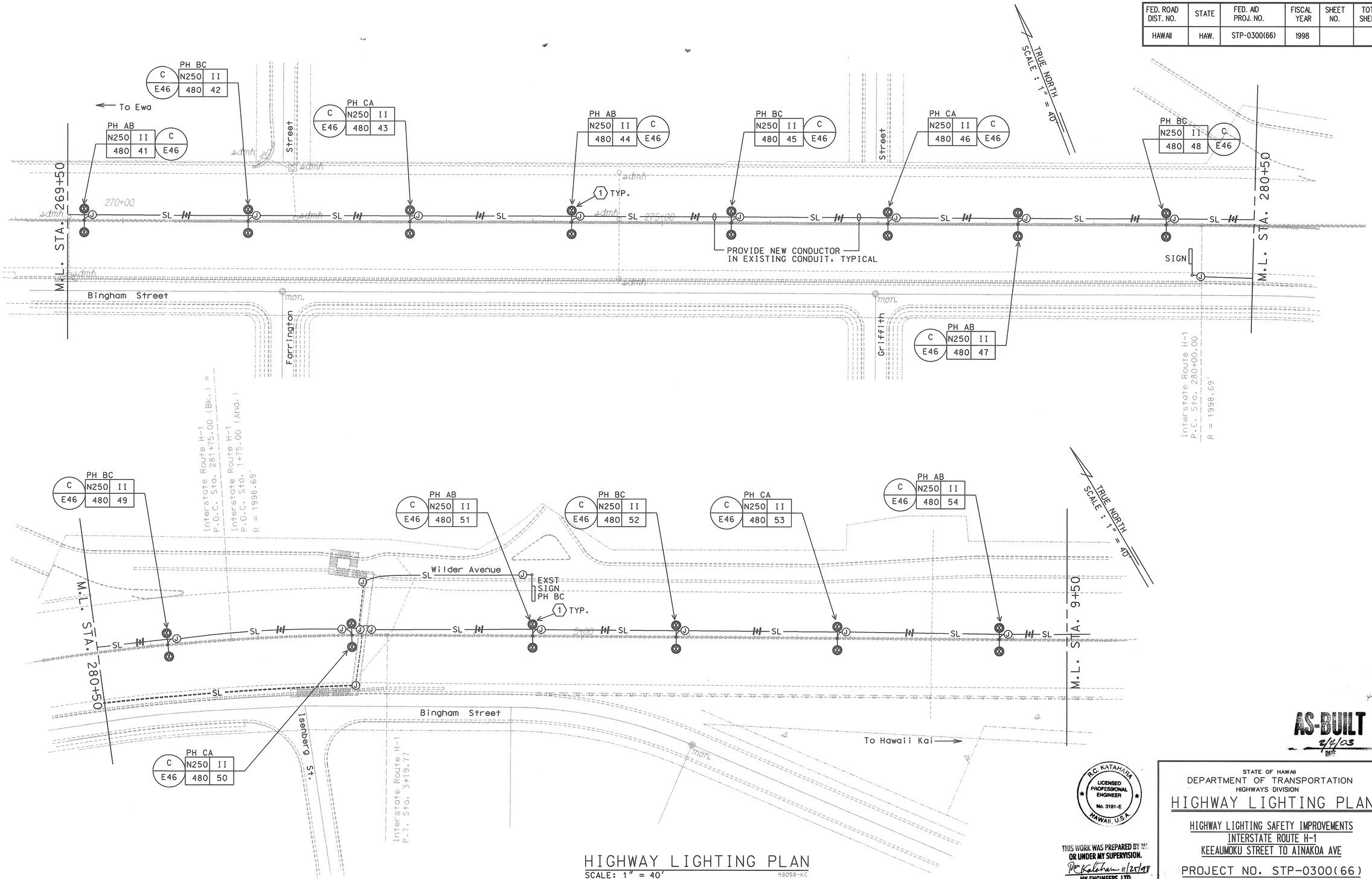

HIGHWAY LIGHTING PLAN
SCALE: 1" = 40'
98058-KC

AS-BUILT
2/4/03
DATE

R.C. KATAHARA
LICENSED PROFESSIONAL ENGINEER
No. 3181-E
HAWAII, U.S.A.

THIS WORK WAS PREPARED BY ME OR UNDER MY SUPERVISION.
R.C. Katahara 11/25/98
MK ENGINEERS, LTD.

STATE OF HAWAII
DEPARTMENT OF TRANSPORTATION
HIGHWAYS DIVISION

HIGHWAY LIGHTING PLAN

HIGHWAY LIGHTING SAFETY IMPROVEMENTS
INTERSTATE ROUTE H-1
KEEAUMOKU STREET TO AINAKOA AVE

PROJECT NO. STP-0300(66)

SCALE: AS NOTED DATE: JANUARY 1999

SHEET No. E34 OF 56 SHEETS

FED. ROAD DIST. NO.	STATE	FED. AID PROJ. NO.	FISCAL YEAR	SHEET NO.	TOTAL SHEETS
HAWAII	HAW.	STP-0300(66)	1998		

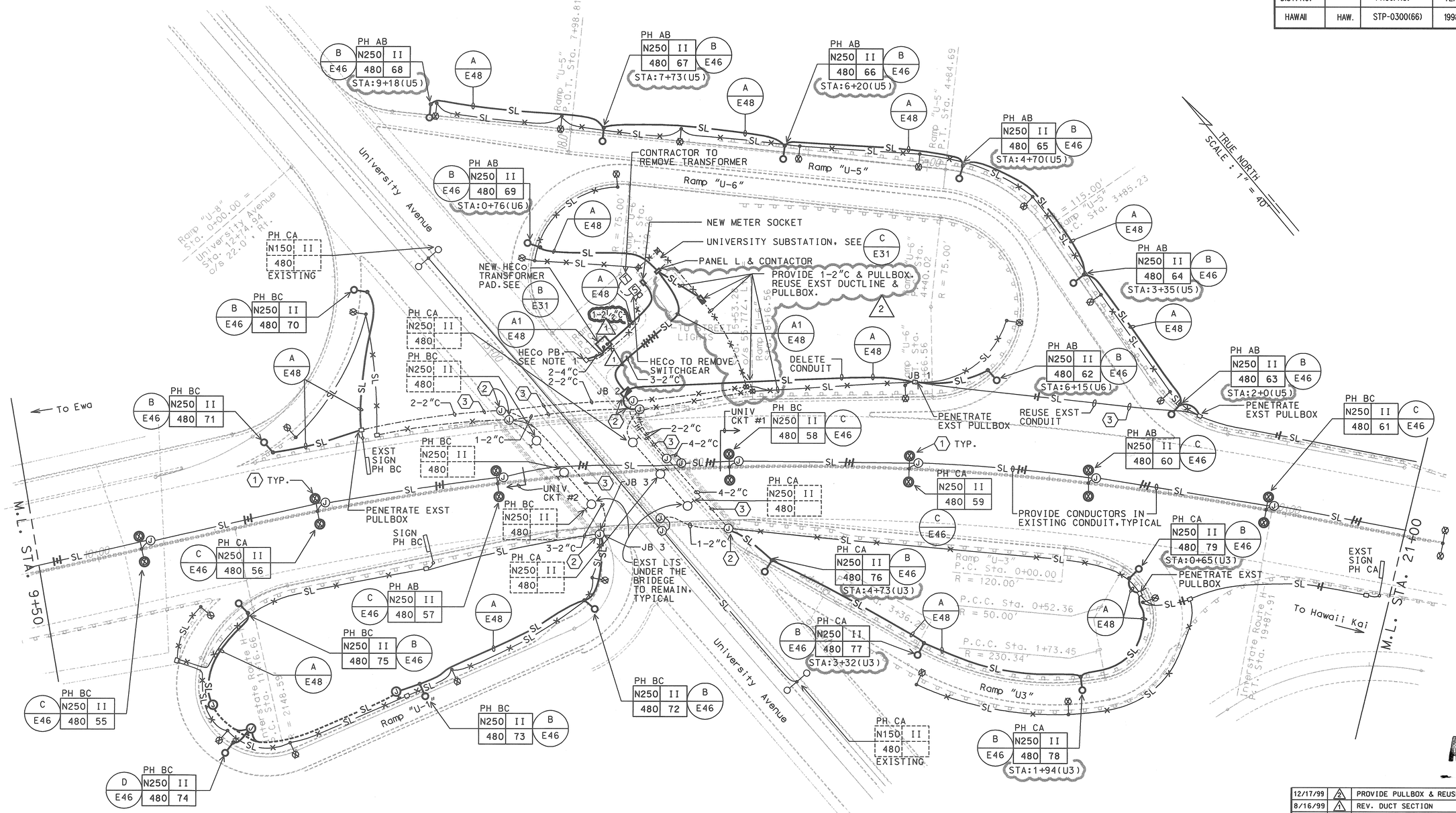

AS-BUILT
2/4/03
INSPECTOR

HIGHWAY LIGHTING PLAN

SCALE: 1" = 40'

98058-KD

NOTES:

1. PENETRATE EXISTING HECo PULLBOX. COORDINATE WITH HECo.

DATE	REV	DESCRIPTION
12/17/99	2	PROVIDE PULLBOX & REUSE EXST CONDUITS
8/16/99	1	REV. DUCT SECTION

R.C. KATAHARA LICENSED PROFESSIONAL ENGINEER No. 3181-E HAWAII, U.S.A.

THIS WORK WAS PREPARED BY ME OR UNDER MY SUPERVISION.

R.C. Katahara 11/25/98

M.K. ENGINEERS, LTD.

STATE OF HAWAII
DEPARTMENT OF TRANSPORTATION
HIGHWAYS DIVISION

HIGHWAY LIGHTING PLAN

HIGHWAY LIGHTING SAFETY IMPROVEMENTS
INTERSTATE ROUTE H-1
KEEAUMOKU STREET TO AINAKOA AVE

PROJECT NO. STP-0300(66)

SCALE: AS NOTED DATE: JANUARY 1999

SHEET No. E35 OF 56 SHEETS

C0-E35

FED. ROAD DIST. NO.	STATE	FED. AID PROJ. NO.	FISCAL YEAR	SHEET NO.	TOTAL SHEETS
HAWAII	HAW.	STP-0300(66)	1998		

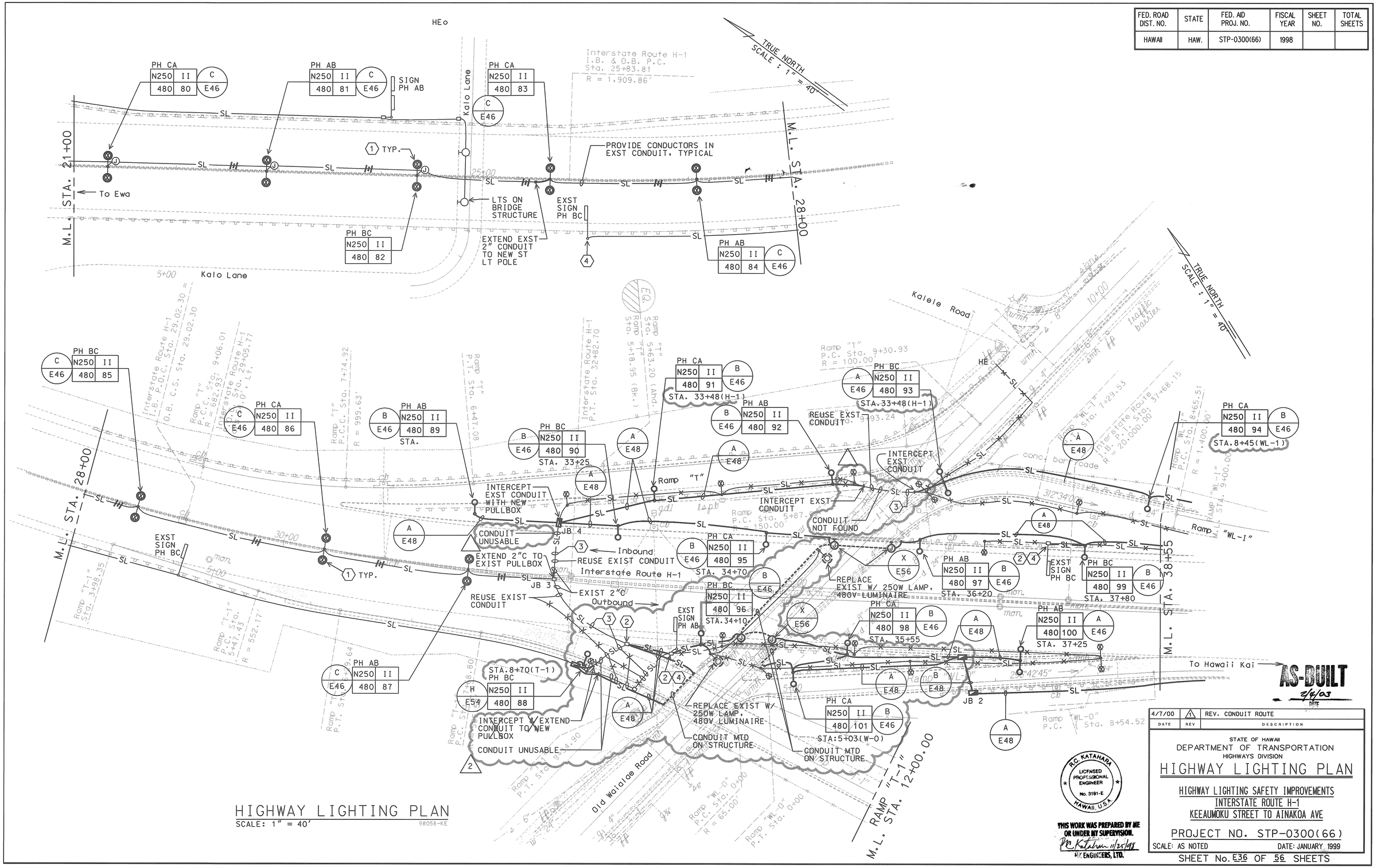

HIGHWAY LIGHTING PLAN
SCALE: 1" = 40'
98058-KE

DATE	REV	DESCRIPTION
4/7/00	1	REV. CONDUIT ROUTE

STATE OF HAWAII
DEPARTMENT OF TRANSPORTATION
HIGHWAYS DIVISION

HIGHWAY LIGHTING PLAN

HIGHWAY LIGHTING SAFETY IMPROVEMENTS
INTERSTATE ROUTE H-1
KEEAUMOKU STREET TO AINAKOA AVE

PROJECT NO. STP-0300(66)

SCALE: AS NOTED DATE: JANUARY 1999

R.C. KATAHARA
LICENSED PROFESSIONAL ENGINEER
No. 3181-E
HAWAII, U.S.A.

THIS WORK WAS PREPARED BY ME OR UNDER MY SUPERVISION.
R.C. Katahara 11/25/98
M.K. ENGINEERS, LTD.

SHEET No. E36 OF 56 SHEETS

FED. ROAD DIST. NO.	STATE	FED. AID PROJ. NO.	FISCAL YEAR	SHEET NO.	TOTAL SHEETS
HAWAII	HAW.	STP-0300(66)	1998		

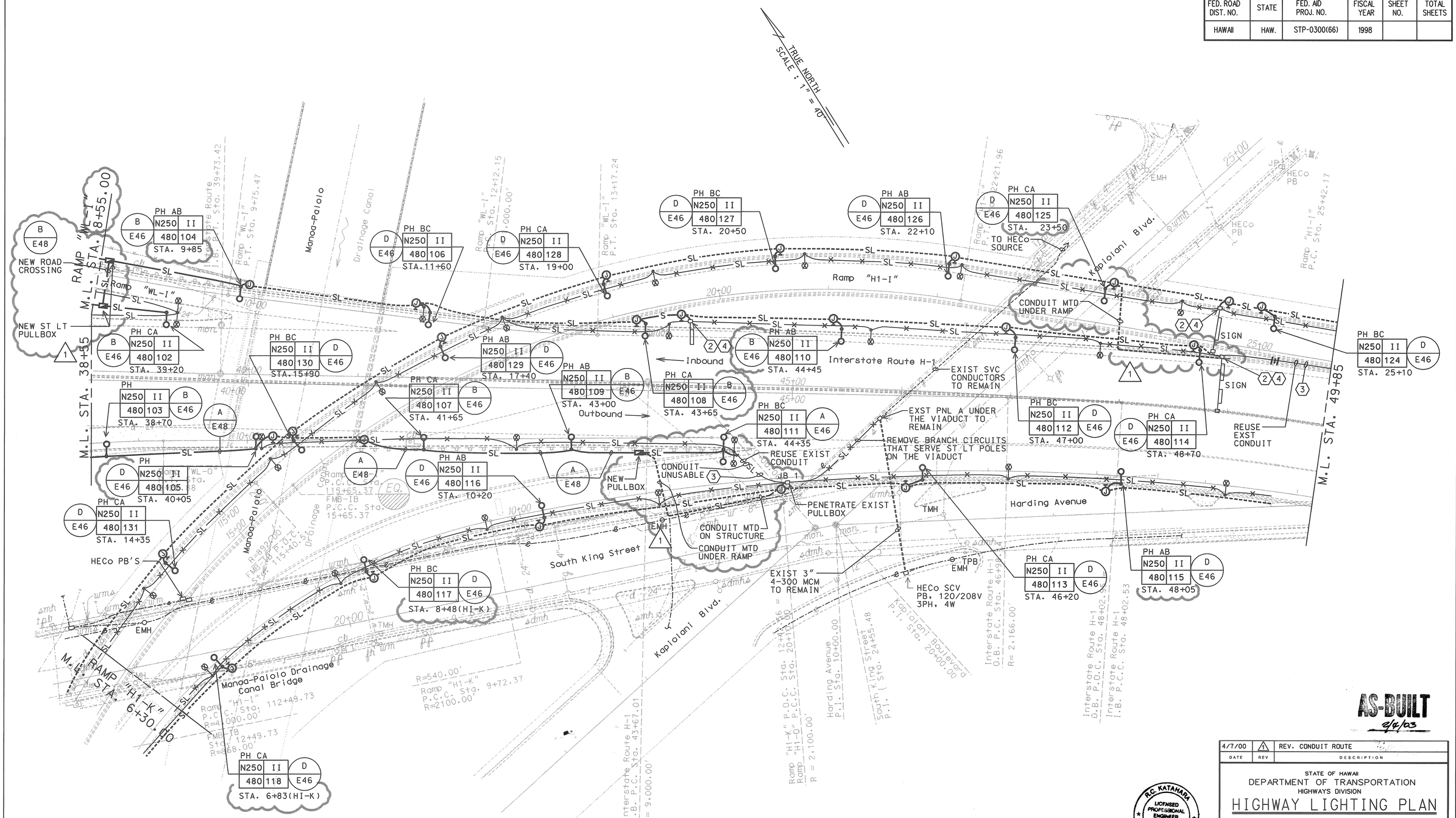

HIGHWAY LIGHTING PLAN

SCALE: 1" = 40'

98058-KG

AS-BUILT
9/4/03

DATE	REV	DESCRIPTION
4/7/00	1	REV. CONDUIT ROUTE

STATE OF HAWAII
DEPARTMENT OF TRANSPORTATION
HIGHWAYS DIVISION

HIGHWAY LIGHTING PLAN

HIGHWAY LIGHTING SAFETY IMPROVEMENTS
INTERSTATE ROUTE H-1
KEEAUMOKU STREET TO AINAKOA AVE

PROJECT NO. STP-0300(66)

SCALE: AS NOTED DATE: JANUARY 1999

SHEET No. E37 OF 56 SHEETS

R.C. KATAHARA
LICENSED PROFESSIONAL ENGINEER
No. 3181-E
HAWAII, U.S.A.

THIS WORK WAS PREPARED BY ME OR UNDER MY SUPERVISION.
R.C. Katahara 11/25/98
MK ENGINEERS, LTD.

FED. ROAD DIST. NO.	STATE	FED. AID PROJ. NO.	FISCAL YEAR	SHEET NO.	TOTAL SHEETS
HAWAII	HAW.	STP-0300(66)	1998		

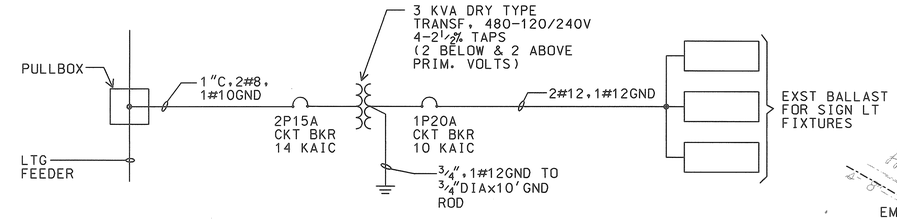

ONE-LINE DIAGRAM - HIGHWAY SIGN

98058KEM

A E38 EQUIPMENT ELEVATION

98058KEN

PLAN

SECTION

TRUE NORTH
SCALE : 1" = 40'

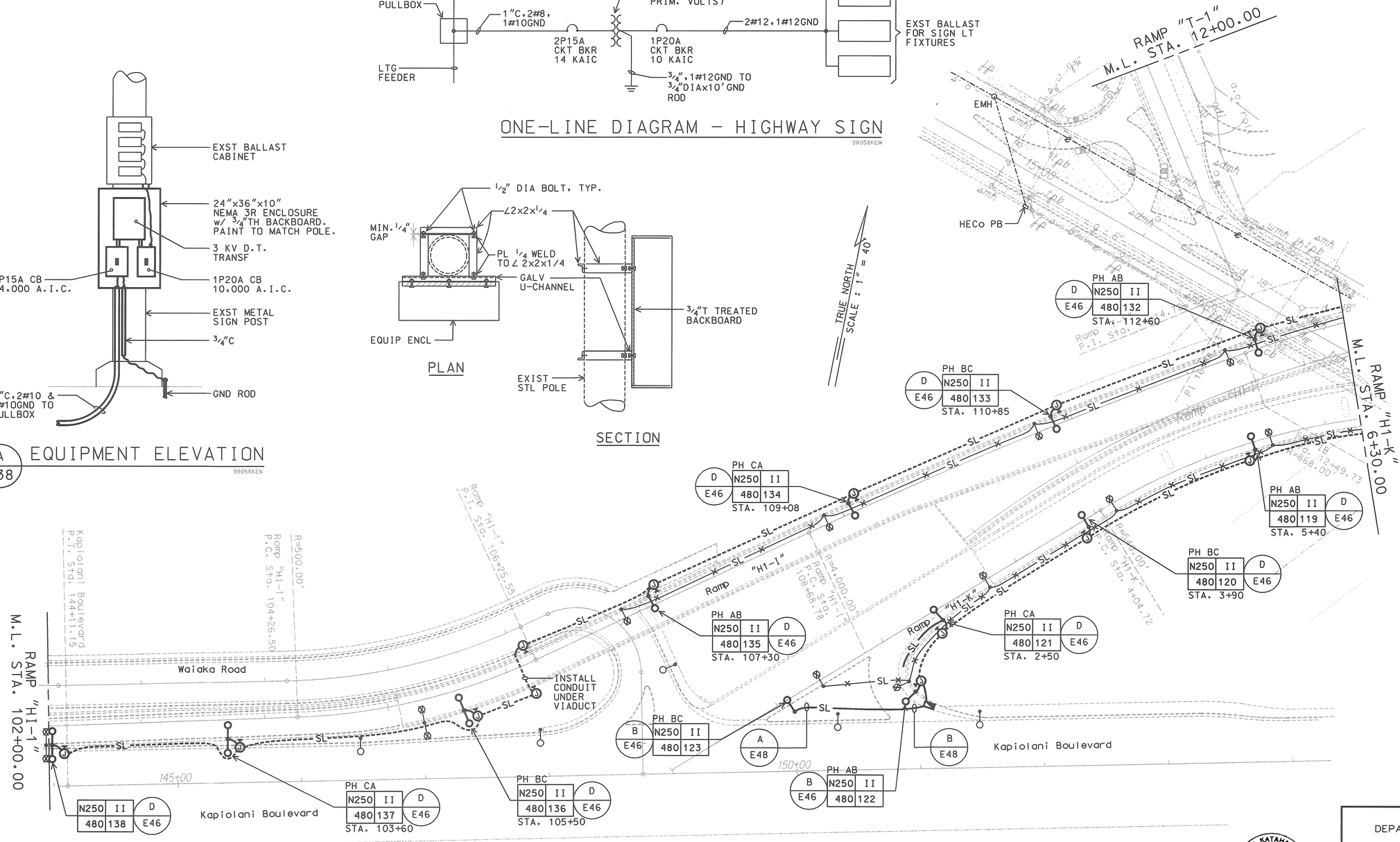

HIGHWAY LIGHTING PLAN

SCALE: 1" = 40'

98058-KF

AS-BUILT
4/8/03
MTC

R.C. KATAHARA
LICENSED PROFESSIONAL ENGINEER
No. 3181-E
HAWAII, U.S.A.

THIS WORK WAS PREPARED BY ME OR UNDER MY SUPERVISION.
11/25/98
MK ENGINEERS, LTD.

STATE OF HAWAII
DEPARTMENT OF TRANSPORTATION
HIGHWAYS DIVISION

HIGHWAY LIGHTING PLAN

HIGHWAY LIGHTING SAFETY IMPROVEMENTS
INTERSTATE ROUTE H-1
KEEAUMOKU STREET TO AINAKOA AVE

PROJECT NO. STP-0300(66)

SCALE: AS NOTED DATE: JANUARY 1999

SHEET No. E38 OF 56 SHEETS

FED. ROAD DIST. NO.	STATE	FED. AID PROJ. NO.	FISCAL YEAR	SHEET NO.	TOTAL SHEETS
HAWAII	HAW.	STP-0300(66)	1998		

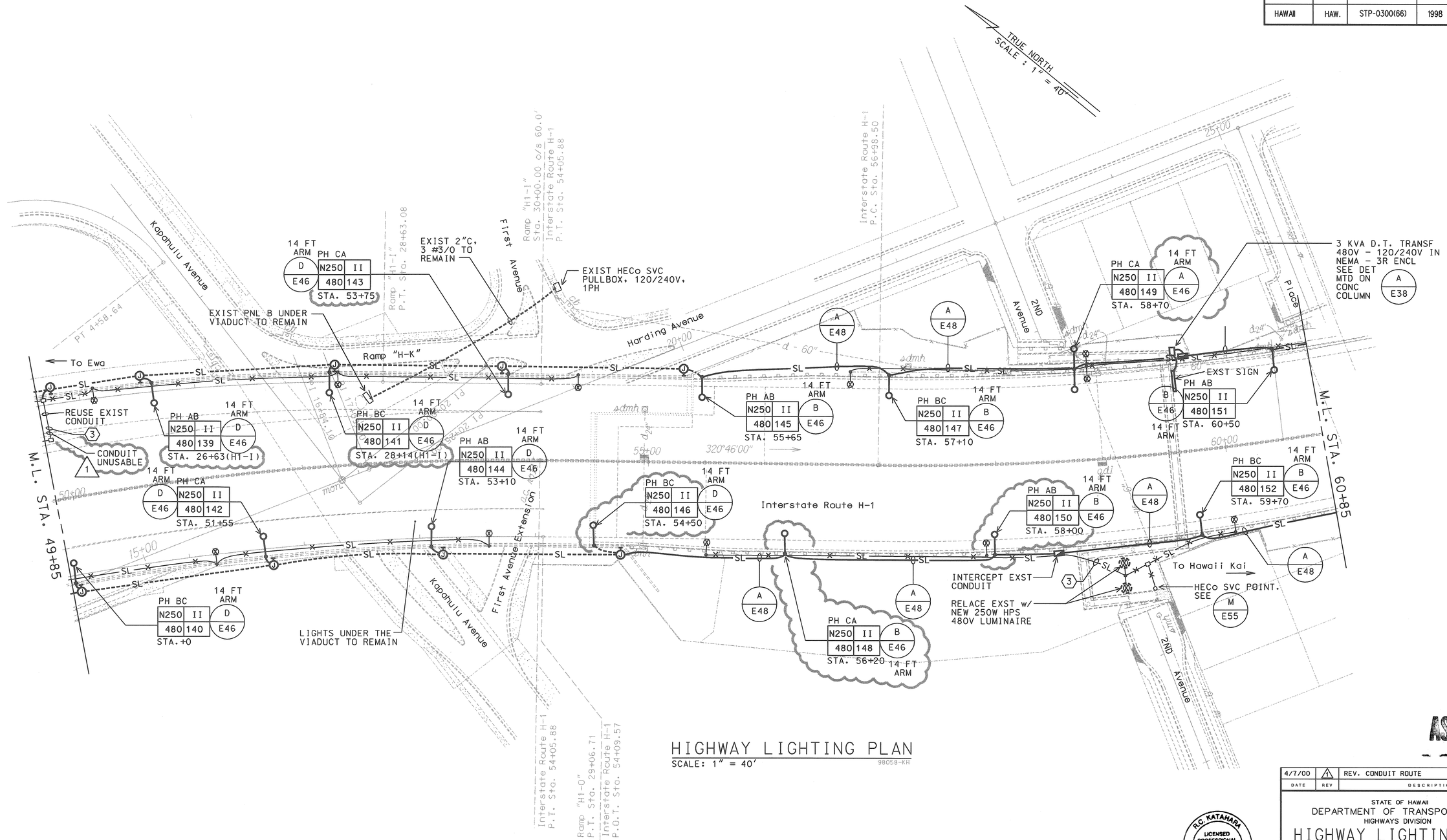

HIGHWAY LIGHTING PLAN

SCALE: 1" = 40'

AS-BUILT
2/4/03

DATE	REV	DESCRIPTION
4/7/00	1	REV. CONDUIT ROUTE

R.C. KATAHARA
LICENSED PROFESSIONAL ENGINEER
No. 3181-E
HAWAII, U.S.A.

THIS WORK WAS PREPARED BY ME OR UNDER MY SUPERVISION.
R.C. Katahara 11/25/98
MK ENGINEERS, LTD.

STATE OF HAWAII
DEPARTMENT OF TRANSPORTATION
HIGHWAYS DIVISION

HIGHWAY LIGHTING PLAN

HIGHWAY LIGHTING SAFETY IMPROVEMENTS
INTERSTATE ROUTE H-1
KEEAUMOKU STREET TO AINAKOA AVE

PROJECT NO. STP-0300(66)

SCALE: AS NOTED DATE: JANUARY 1999

SHEET No. E39 OF 56 SHEETS

FED. ROAD DIST. NO.	STATE	FED. AID PROJ. NO.	FISCAL YEAR	SHEET NO.	TOTAL SHEETS
HAWAII	HAW.	STP-0300(66)	1998		

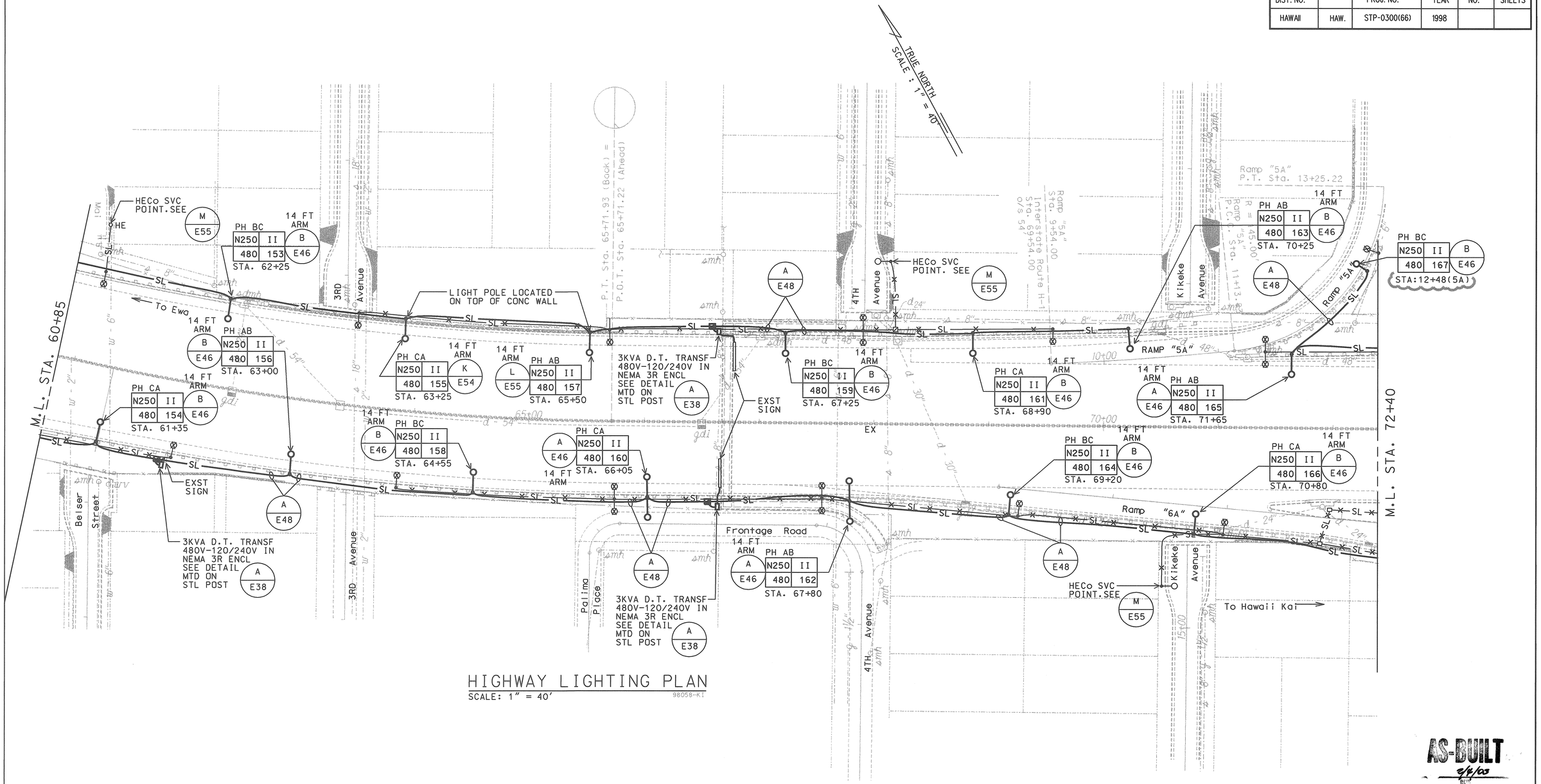

HIGHWAY LIGHTING PLAN

SCALE: 1" = 40'

98058-KI

AS-BUILT
2/4/03

R.C. KATAHARA
LICENSED PROFESSIONAL ENGINEER
No. 3181-E
HAWAII, U.S.A.

THIS WORK WAS PREPARED BY ME OR UNDER MY SUPERVISION.
R.C. Katahara 11/25/98
MK ENGINEERS, LTD.

STATE OF HAWAII
DEPARTMENT OF TRANSPORTATION
HIGHWAYS DIVISION

HIGHWAY LIGHTING PLAN

HIGHWAY LIGHTING SAFETY IMPROVEMENTS
INTERSTATE ROUTE H-1
KEEAUMOKU STREET TO AINAKOA AVE

PROJECT NO. STP-0300(66)

SCALE: AS NOTED DATE: JANUARY 1999

SHEET No. E40 OF 56 SHEETS

FED. ROAD DIST. NO.	STATE	FED. AID PROJ. NO.	FISCAL YEAR	SHEET NO.	TOTAL SHEETS
HAWAII	HAW.	STP-0300(66)	1998		

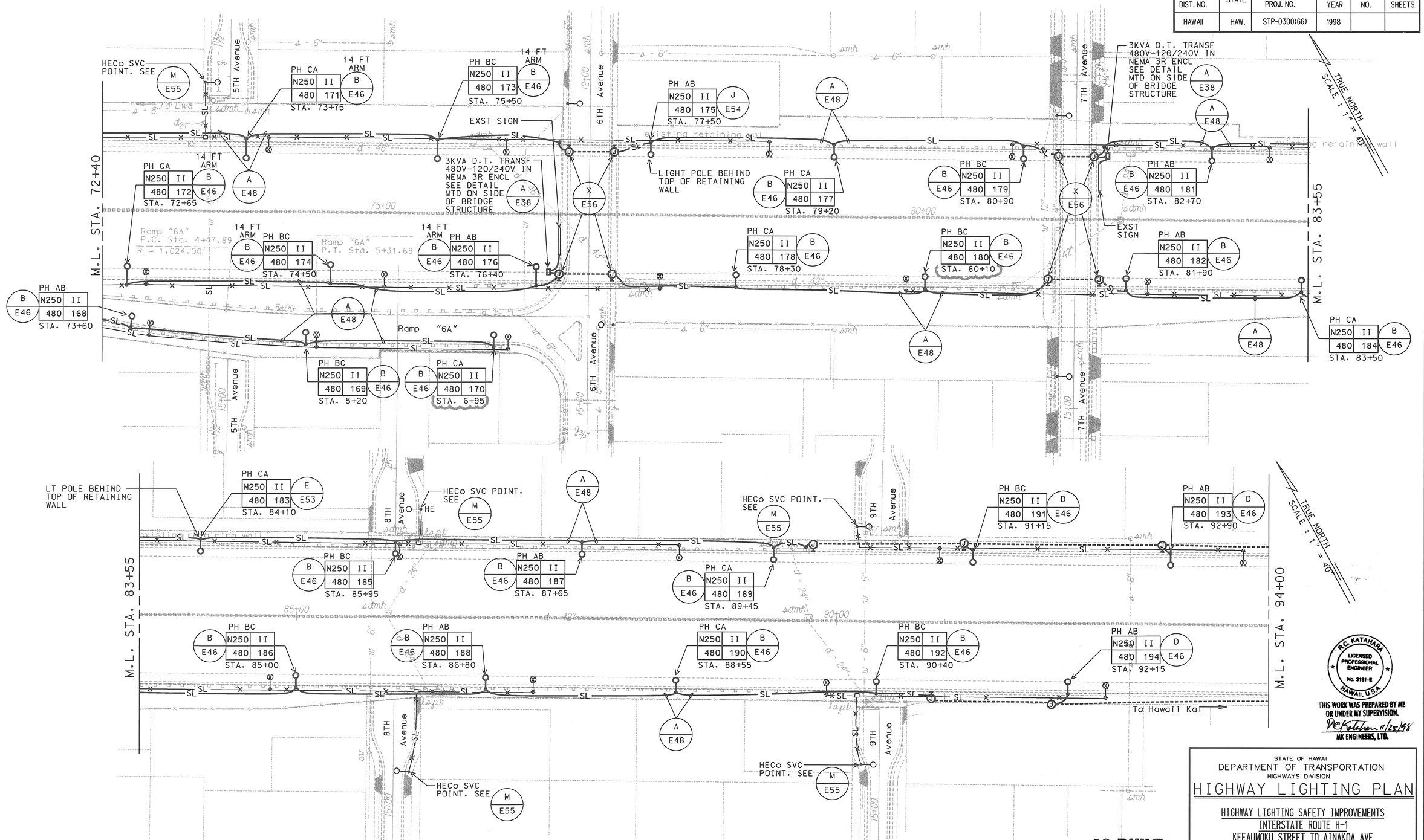

HIGHWAY LIGHTING PLAN

SCALE: 1" = 40'

98058-KJ

R.C. KATAHARA LICENSED PROFESSIONAL ENGINEER No. 3181-E HAWAII, U.S.A.

THIS WORK WAS PREPARED BY ME OR UNDER MY SUPERVISION.

R.C. Katahara 11/25/98

MK ENGINEERS, LTD.

AS-BUILT

2/4/03

DATE

STATE OF HAWAII

DEPARTMENT OF TRANSPORTATION

HIGHWAYS DIVISION

HIGHWAY LIGHTING PLAN

HIGHWAY LIGHTING SAFETY IMPROVEMENTS

INTERSTATE ROUTE H-1

KEEAUMOKU STREET TO AINAKOA AVE

PROJECT NO. STP-0300(66)

SCALE: AS NOTED

DATE: JANUARY 1999

SHEET No. E41 OF 56 SHEETS

FED. ROAD DIST. NO.	STATE	FED. AID PROJ. NO.	FISCAL YEAR	SHEET NO.	TOTAL SHEETS
HAWAII	HAW.	STP-0300(66)	1998		

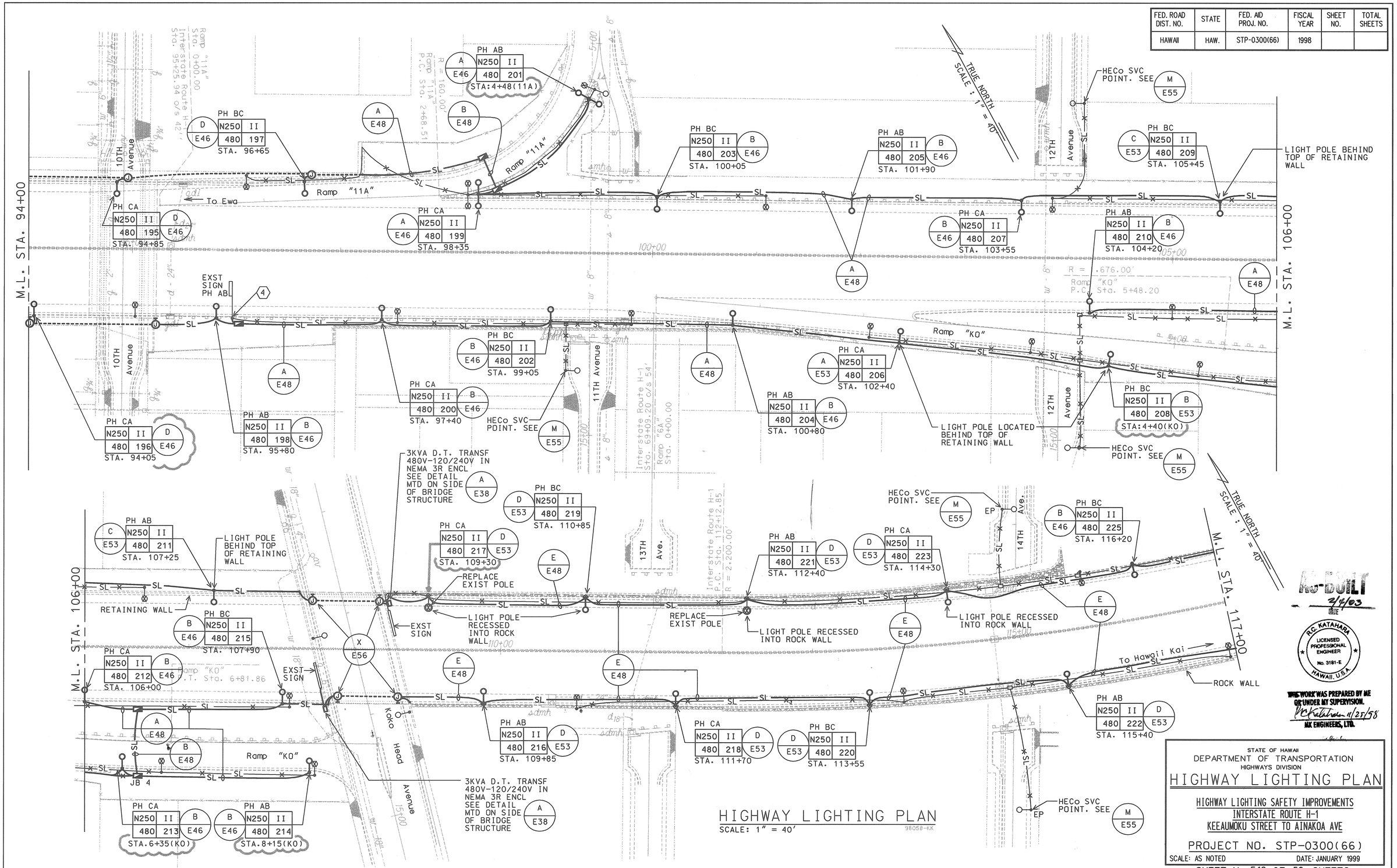

HIGHWAY LIGHTING PLAN

AS-BUILT 2/4/03 DATE

R.C. KATAHARA LICENSED PROFESSIONAL ENGINEER No. 3181-E HAWAII, U.S.A.

THIS WORK WAS PREPARED BY ME OR UNDER MY SUPERVISION. R.C. Katahara 11/25/98

MK ENGINEERS, LTD.

STATE OF HAWAII
DEPARTMENT OF TRANSPORTATION
HIGHWAYS DIVISION

HIGHWAY LIGHTING PLAN

HIGHWAY LIGHTING SAFETY IMPROVEMENTS
INTERSTATE ROUTE H-1
KEEAUMOKU STREET TO AINAKOA AVE

PROJECT NO. STP-0300(66)

SCALE: AS NOTED DATE: JANUARY 1999

SHEET No. E42 OF 56 SHEETS

FED. ROAD DIST. NO.	STATE	FED. AID PROJ. NO.	FISCAL YEAR	SHEET NO.	TOTAL SHEETS
HAWAII	HAW.	STP-0300(66)	1998		

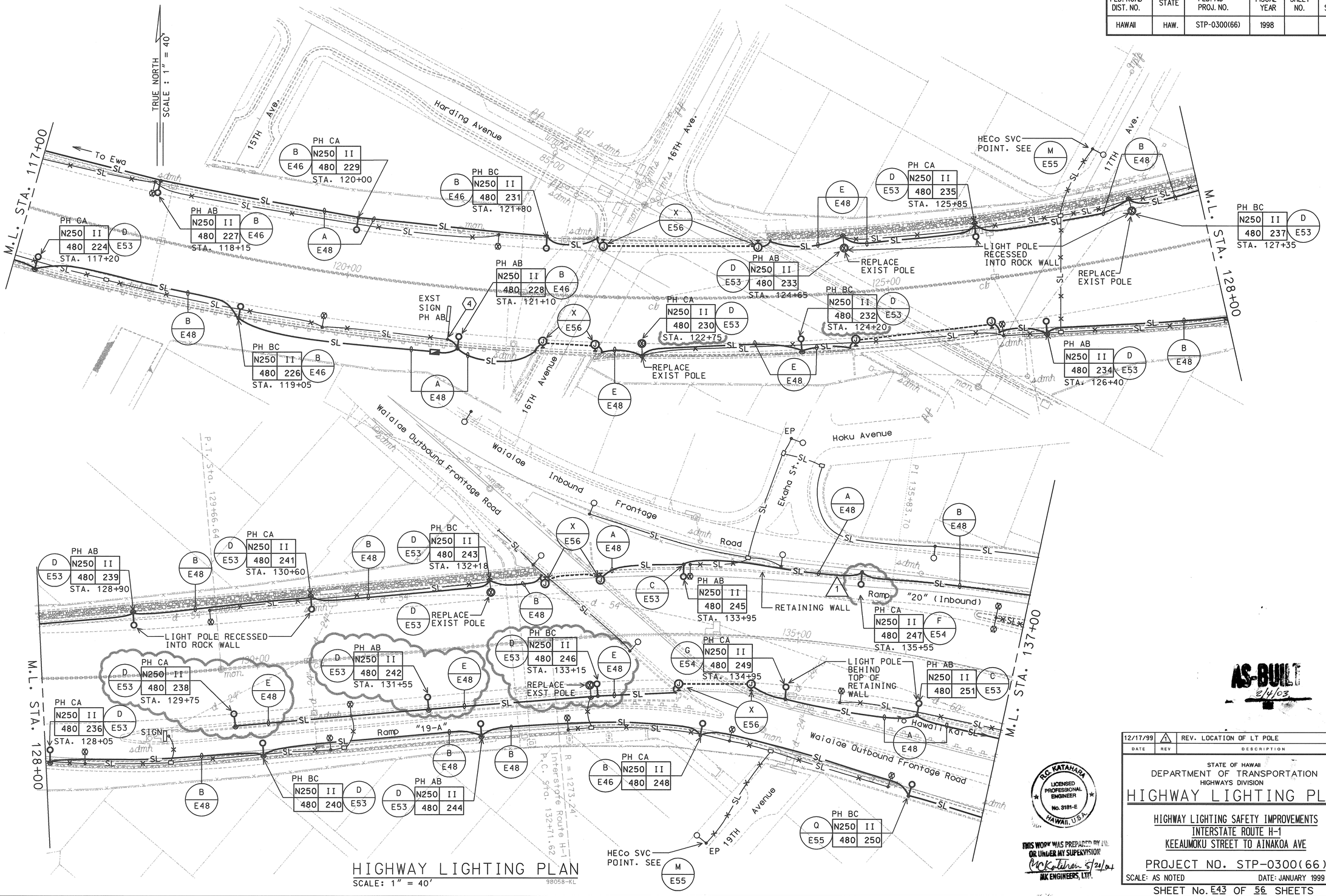

HIGHWAY LIGHTING PLAN
SCALE: 1" = 40'

98058-KL

AS-BUILT
2/4/03

DATE	REV	DESCRIPTION
12/17/99	1	REV. LOCATION OF LT POLE

STATE OF HAWAII
DEPARTMENT OF TRANSPORTATION
HIGHWAYS DIVISION

HIGHWAY LIGHTING PLAN

HIGHWAY LIGHTING SAFETY IMPROVEMENTS
INTERSTATE ROUTE H-1
KEEAUMOKU STREET TO AINAKOA AVE

PROJECT NO. STP-0300(66)

SCALE: AS NOTED DATE: JANUARY 1999

SHEET No. E43 OF 56 SHEETS

R.C. KATAHARA
LICENSED PROFESSIONAL ENGINEER
No. 3181-E
HAWAII, U.S.A.

THIS WORK WAS PREPARED BY ME OR UNDER MY SUPERVISION
R.C. Katahara 5/21/04
MK ENGINEERS, LTD.

FED. ROAD DIST. NO.	STATE	FED. AID PROJ. NO.	FISCAL YEAR	SHEET NO.	TOTAL SHEETS
HAWAII	HAW.	STP-0300(66)	1998		

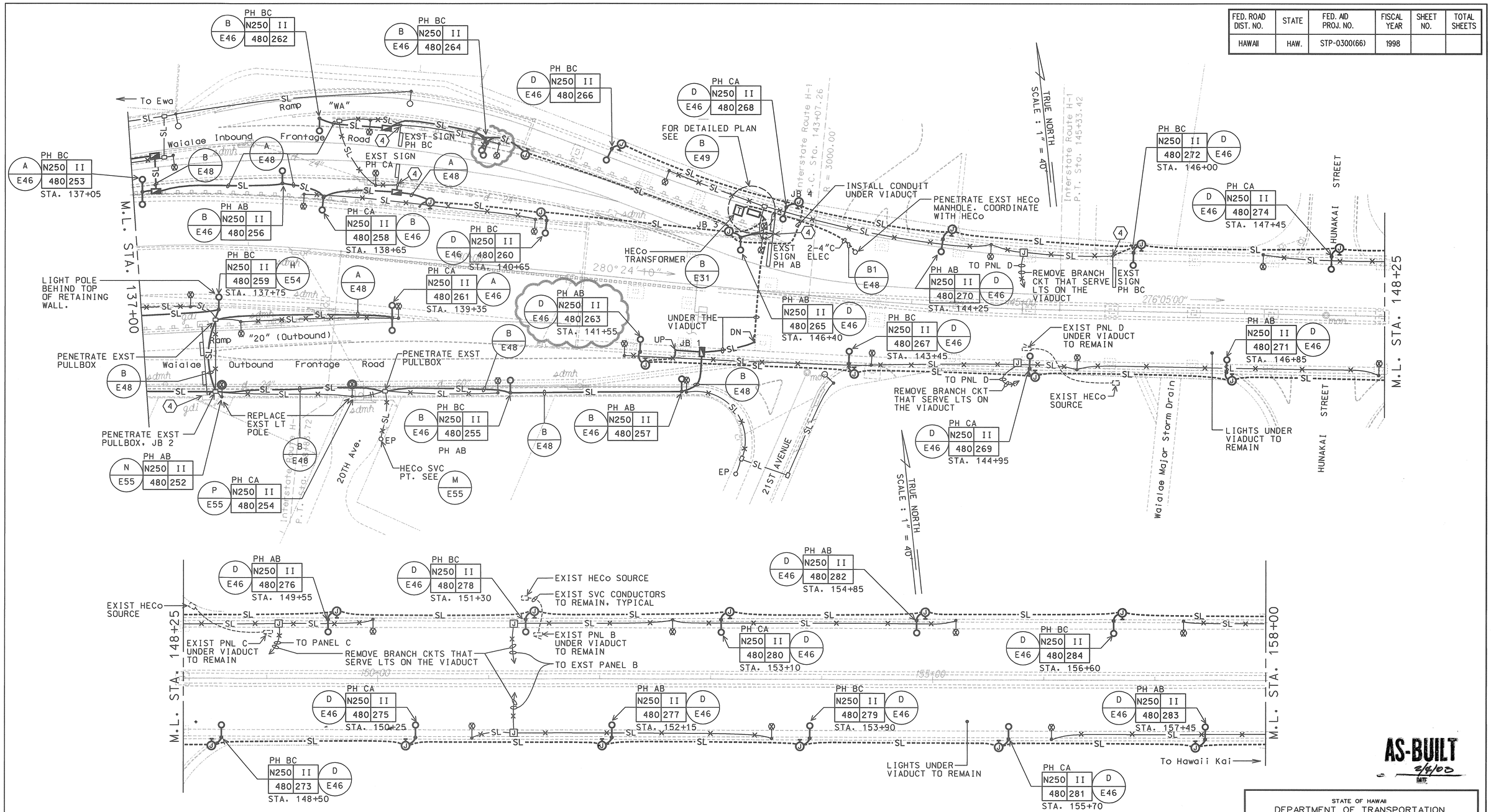

HIGHWAY LIGHTING PLAN

SCALE: 1" = 40'

98058-KM

AS-BUILT
2/4/00
DATE

R.C. KATAHARA
LICENSED PROFESSIONAL ENGINEER
No. 3181-E
HAWAII, U.S.A.

THIS WORK WAS PREPARED BY ME OR UNDER MY SUPERVISION.
R.C. Katahara 1/25/98
MK ENGINEERS, LTD.

STATE OF HAWAII
DEPARTMENT OF TRANSPORTATION
HIGHWAYS DIVISION

HIGHWAY LIGHTING PLAN

HIGHWAY LIGHTING SAFETY IMPROVEMENTS
INTERSTATE ROUTE H-1
KEEAUMOKU STREET TO AINAKOA AVE

PROJECT NO. STP-0300(66)

SCALE: AS NOTED DATE: JANUARY 1999

SHEET No. E44 OF 56 SHEETS

FED. ROAD DIST. NO.	STATE	FED. AID PROJ. NO.	FISCAL YEAR	SHEET NO.	TOTAL SHEETS
HAWAII	HAW.	STP-0300(66)	1998		

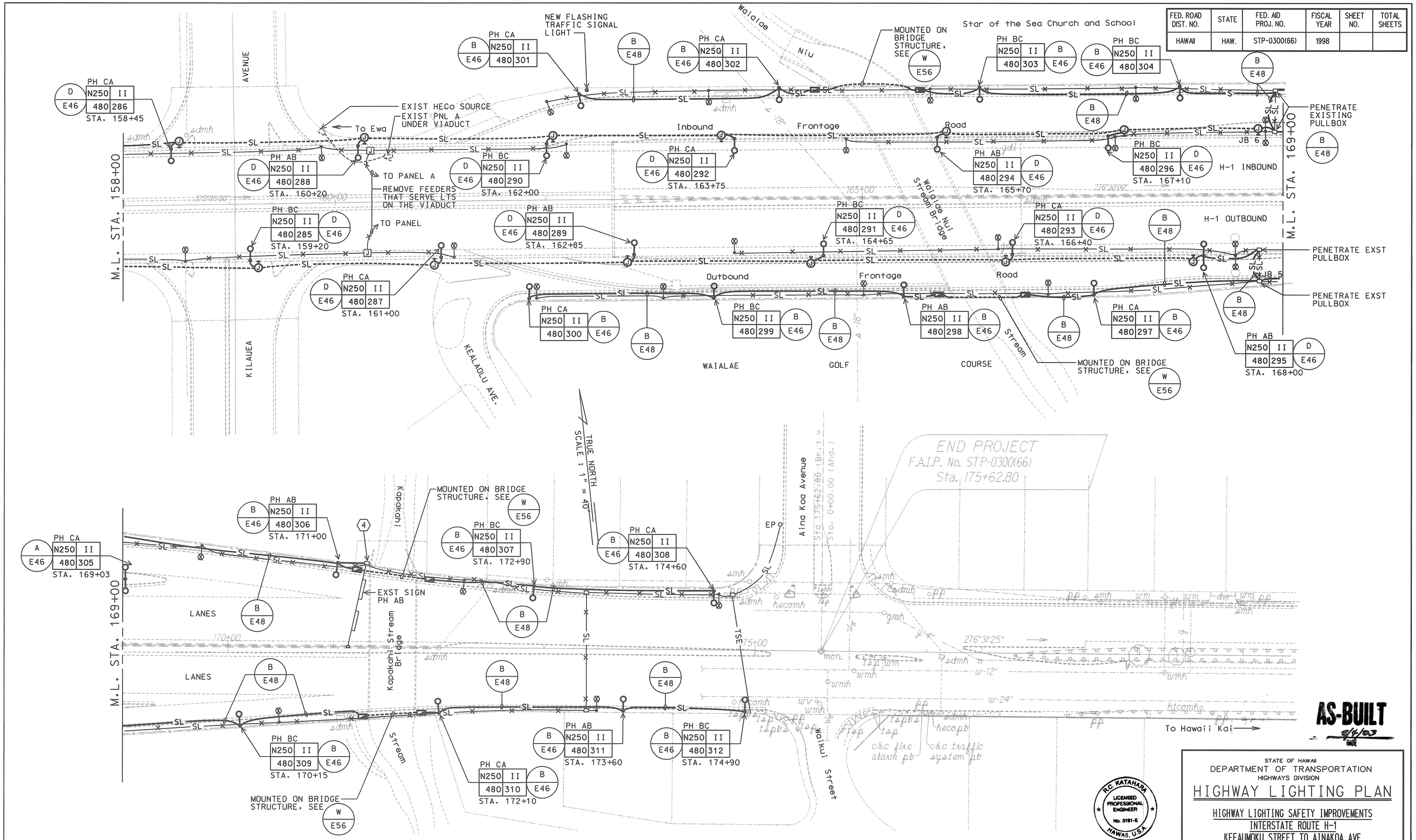

HIGHWAY LIGHTING PLAN

SCALE: 1" = 40'

98058-KN

AS-BUILT 8/4/03 DATE

R.C. KATAHARA LICENSED PROFESSIONAL ENGINEER No. 3181-E HAWAII, U.S.A.

THIS WORK WAS PREPARED BY ME OR UNDER MY SUPERVISION.

MK ENGINEERS, LTD.

STATE OF HAWAII
DEPARTMENT OF TRANSPORTATION
HIGHWAYS DIVISION

HIGHWAY LIGHTING PLAN

HIGHWAY LIGHTING SAFETY IMPROVEMENTS
INTERSTATE ROUTE H-1
KEEAUMOKU STREET TO AINAKOA AVE

PROJECT NO. STP-0300(66)

SCALE: AS NOTED DATE: JANUARY 1999

SHEET No. E45 OF 56 SHEETS

FED. ROAD DIST. NO.	STATE	FED. AID PROJ. NO.	FISCAL YEAR	SHEET NO.	TOTAL SHEETS
HAWAII	HAW.	STP-0300(66)	1998		

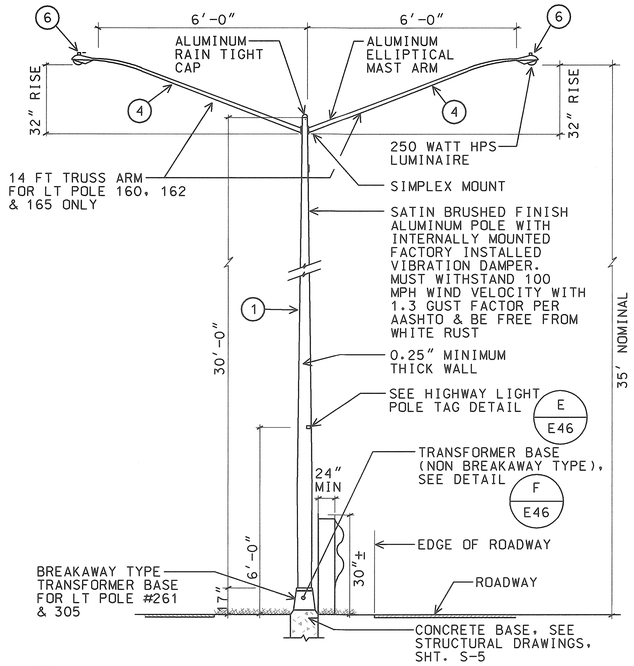

A E46 STREET LIGHT STANDARD INSTALLATION BASE
NTS
98058KDF

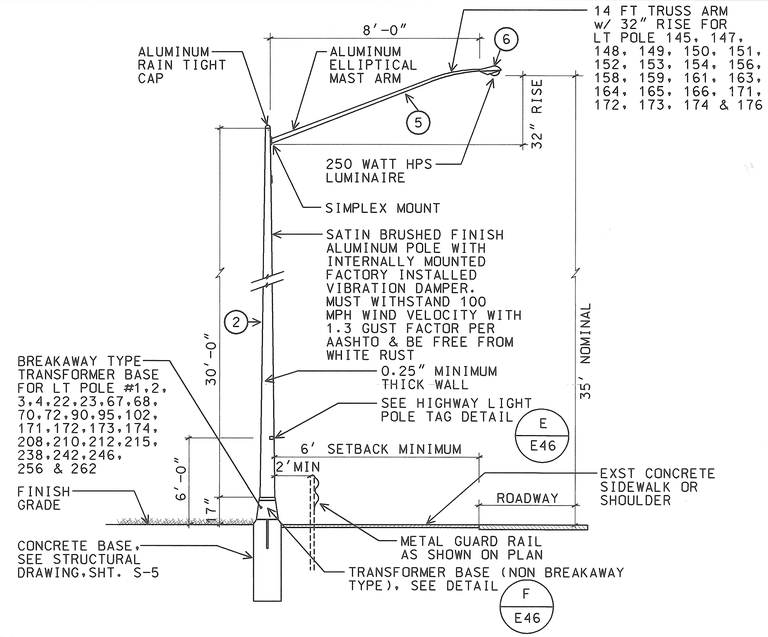

B E46 STREET LIGHT STANDARD INSTALLATION BASE
NTS
98058KDF

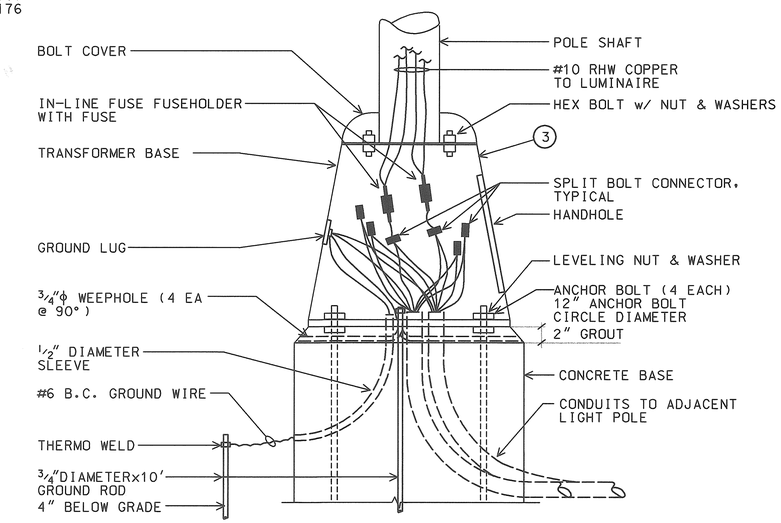

F E46 TYPICAL TRANSFORMER BASE WIRING DETAIL
NTS
98058KDF

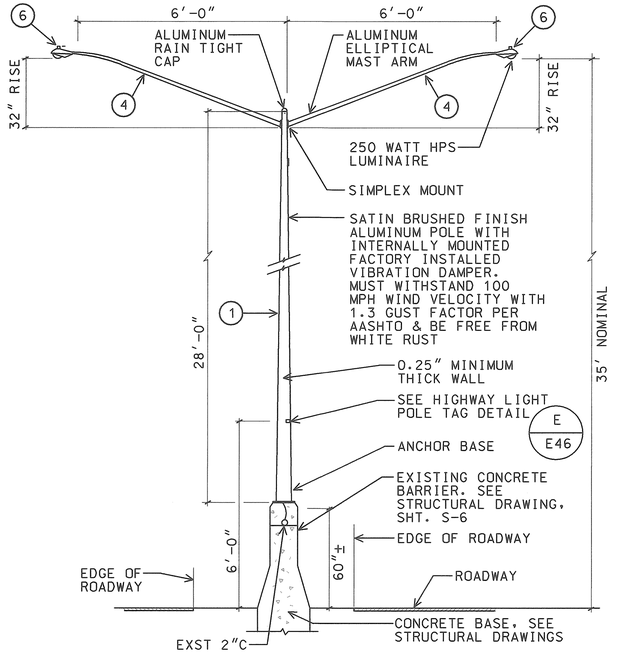

C E46 STREET LIGHT STANDARD ON EXST CONCRETE BARRIER
NTS
98058KDF

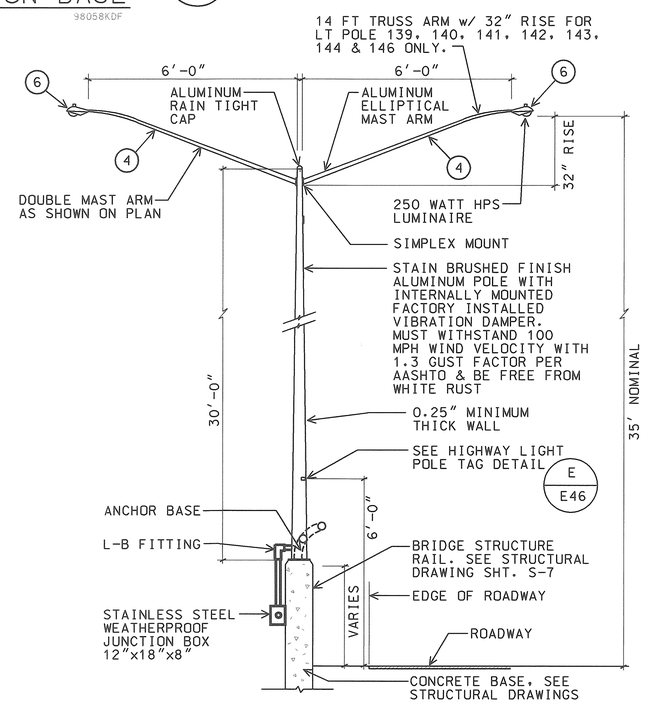

D E46 STREET LIGHT STANDARD ON EXST BRIDGE STRUCTURE
NTS
98058KDF

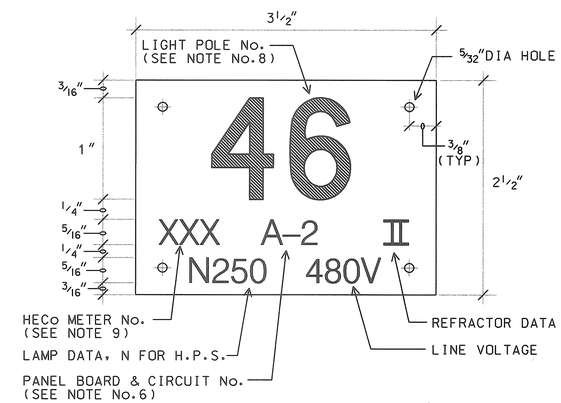

E E46 HIGHWAY LIGHT POLE TAG DETAIL
NTS
98058KDF

NOTES:

1. USE 3 PLY LAMINATED FLEXIBLE PLASTIC BLACK-WHITE-BLACK THICKNESS BLACK CAP SHEET-0.010", WHITE BASE SHEET-0.052", BLACK BASE SHEET-0.010".
2. LIGHT POLE NUMBER SIZE SHALL BE 1" HIGH AND ENGRAVED 1/8" WIDE, WHITE IN COLOR (NUMBER AS REQUIRED).
3. NOMENCLATURE SIZE SHALL BE 5/16" HIGH AND ENGRAVED 1/32" WIDE, WHITE IN COLOR (HECo VAULT NUMBER PANEL BOARD AND CIRCUIT NUMBER, LINE VOLTAGE, LAMP DATA AND REFRACTOR DATA AS REQUIRED.
4. ATTACH TO ALUMINUM AND STEEL POST WITH No. 8 STAINLESS STEEL, 1/2" LONG DRIVE SCREWS IN 1/8" DRILL HOLE. ATTACH TO WOOD POLES WITH 4D ALUMINUM NAIL.
5. NUMBERS ARE INSCRIBED BY CUTTING THROUGH "BLACK CAP SHEET" TO EXPOSE "WHITE LETTERS."
6. NOMENCLATURE REQUIRED FOR SYSTEMS WITH TWO OR MORE CIRCUITS (LETTER INDICATES PANEL BOARD, NUMBER INDICATES CIRCUIT).
7. FOR LIGHT POLES INSTALLED ON RAMP, ASSIGN NUMBERS TO INCLUDE RAMP I.D. AND LIGHT NUMBER. LEGEND MAY BE LESS THAN ONE (1) INCH IN HEIGHT.
8. LIGHT NUMBERS SHALL BE OBTAINED FROM THE STATE. USE AN ALPHABET SUFFIX TO DESIGNATE LIGHTS MOUNTED ON THE SAME POLE (e.g. 123A & 123B).
9. FOR NON-METERED SYSTEM, LEAVE THIS BLOCK BLANK.

98058KDF

MATERIAL LIST

ITEM	DESCRIPTION	MANUFACTURER
1	LIGHT POLE, 28', ALUM	LEXINGTON 2708-45808T4
2	LIGHT POLE, 30', ALUM	LEXINGTON 2908-45808T4
3	TRANSFORMER BASE (ALUM) NON-BREAKAWAY OR BREAKAWAY TYPE	LEXINGTON 08R1012S17
4	MAST ARM, 6', ALUM, DOUBLE SIMPLEX MOUNT	LEXINGTON 2MA0632S (SEE DETAILS & PLANS FOR 14' TRUSS ARM)
5	MAST ARM, 8', ALUM, SINGLE SIMPLEX MOUNT	LEXINGTON 1MA0832S (SEE DETAILS & PLANS FOR 14' TRUSS ARM)
6	LUMINAIRE, 250W HPS	GENERAL ELECTRIC M4RR-25-S-5-M-1-G-MS2

R.C. KATAHARA LICENSED PROFESSIONAL ENGINEER No. 3181-E HAWAII, U.S.A.

AS-BUILT 2/18/03 DATE

THIS WORK WAS PREPARED BY ME OR UNDER MY SUPERVISION. 11/25/98
NK ENGINEERS, LTD.

STATE OF HAWAII
DEPARTMENT OF TRANSPORTATION
HIGHWAYS DIVISION

STREET LIGHT DETAILS

HIGHWAY LIGHTING SAFETY IMPROVEMENTS
INTERSTATE ROUTE H-1
KEEAUMOKU STREET TO AINAKOA AVE

PROJECT NO. STP-0300(66)

SCALE: AS NOTED DATE: JANUARY 1999

SHEET No. E46 OF 56 SHEETS

FED. ROAD DIST. NO.	STATE	FED. AID PROJ. NO.	FISCAL YEAR	SHEET NO.	TOTAL SHEETS
HAWAII	HAW.	STP-0300(66)	1998		

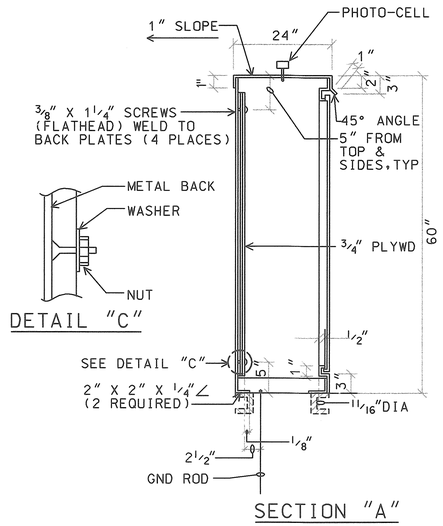

SECTION "A"

DETAIL "C"

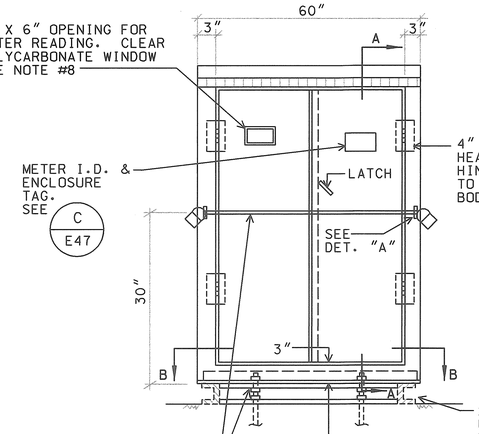

ELEVATION

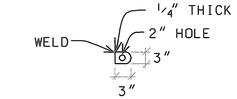

DETAIL "A"
(SIDE VIEW)

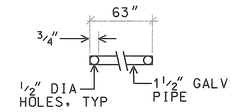

DETAIL "B"

2" X 4" X 4.5 HOT DIPPED GALV U-CHANNEL BOX FRAME. WASH CHANNEL WITH SOLUTION OF CHEMICAL PHOSPHORIC METAL ETCH & ALLOW TO DRY. APPLY TWO COATS OF GALV. METAL PRIMER & TWO COATS OF ENAMEL TO MATCH CABINET.

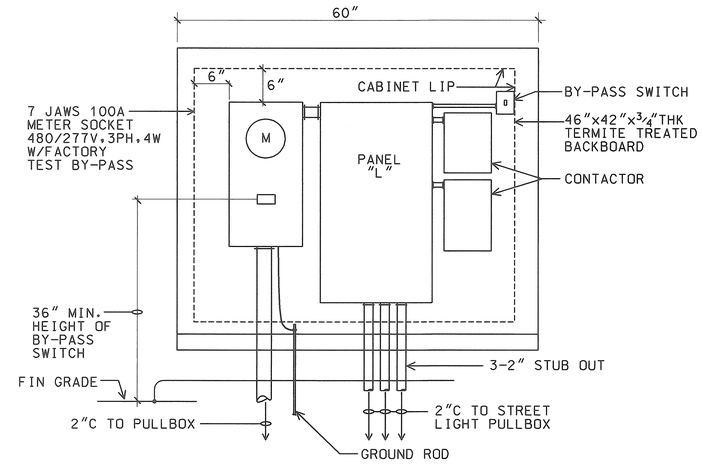

B E47 EQUIPMENT ELEVATION
NTS
98058KDC

NOTES:

1. CABINET TO BE PRIMED WITH ONE COAT SHOP PRIMER.
2. PLYWOOD TO BE 3/4" THICK (MIN.) TREATED (WOLMANIZED) PLYWOOD. (EXTERIOR GRADE)
3. MADE FROM 10 GAUGE ALUMINUM.
4. PROVIDE ACRYLIC ENAMEL FINISH, COLOR TO MATCH TRANSFORMER. (2 COATS)
5. ENCLOSURE SHALL BE NEMA 3R WITH NEOPRENE GASKETING.
6. PADLOCKS:
   1-HECo FURNISHED
   1-CONTRACTOR FURNISHED, BRASS CORBIN SESAME COMBINATION
7. SHOP FABRICATION DRAWINGS SHALL BE SUBMITTED FOR APPROVAL.
8. LOCATION OF OPENING FOR METER READER TO CORRESPOND WITH LOCATION OF METER.

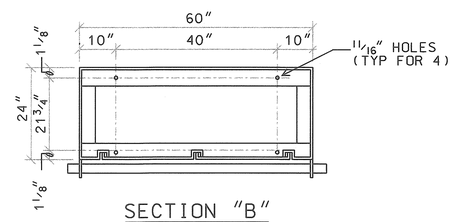

SECTION "B"
(ANGLE FRAME)

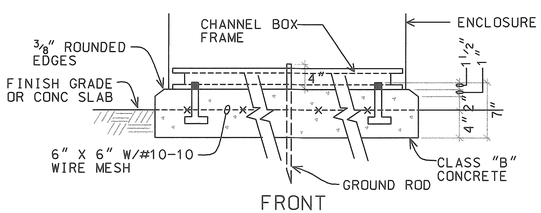

FRONT

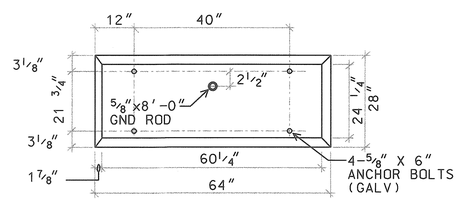

PLAN

CONCRETE PAD

A E47 METER AND EQUIPMENT CABINET
NTS
98058KDE

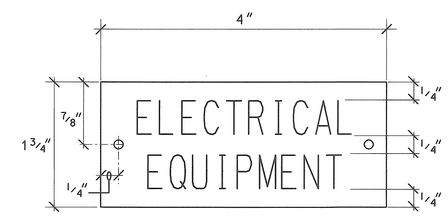

NOTES:

1. USE 2 PLY PLASTIC - BLACK, WHITE.
2. LETTER SIZE SHALL BE 1/2" HIGH AND ENGRAVED 1/16" WIDE, WHITE IN COLOR.
3. ATTACH TO EQUIPMENT ENCLOSURE WITH NO.7 STAINLESS STEEL DRIVE SCREWS.

C E47 METER EQUIPMENT ID TAG DETAIL
NTS
98058KDD

AS-BUILT
2/4/03
DATE

R.C. KATAHARA
LICENSED PROFESSIONAL ENGINEER
No. 3181-E
HAWAII, U.S.A.

THIS WORK WAS PREPARED BY ME OR UNDER MY SUPERVISION.
11/25/98
MK ENGINEERS, LTD.

STATE OF HAWAII
DEPARTMENT OF TRANSPORTATION
HIGHWAYS DIVISION

METER DETAILS

HIGHWAY LIGHTING SAFETY IMPROVEMENTS
INTERSTATE ROUTE H-1
KEEAUMOKU STREET TO AINAKOA AVE

PROJECT NO. STP-0300(66)

SCALE: AS NOTED DATE: JANUARY 1999

SHEET No. E47 OF 56 SHEETS

FED. ROAD DIST. NO.	STATE	FED. AID PROJ. NO.	FISCAL YEAR	SHEET NO.	TOTAL SHEETS
HAWAII	HAW.	STP-0300(66)	1998		

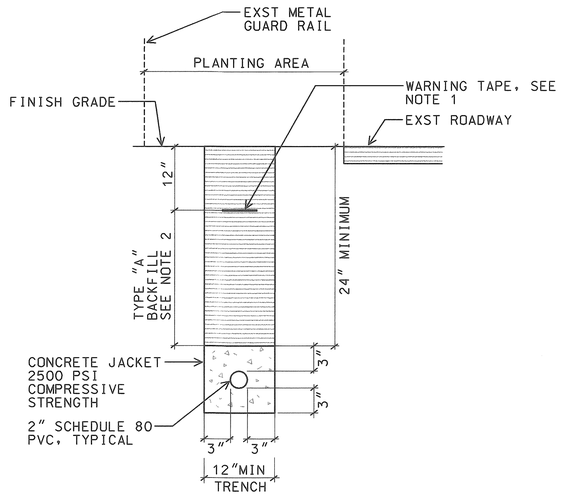

A / E48 CONCRETE ENCASED (NON ROADWAY AREA)
NTS
98058KDA

A1 / E48 SIMILAR EXCEPT w/ 2 CONDUITS

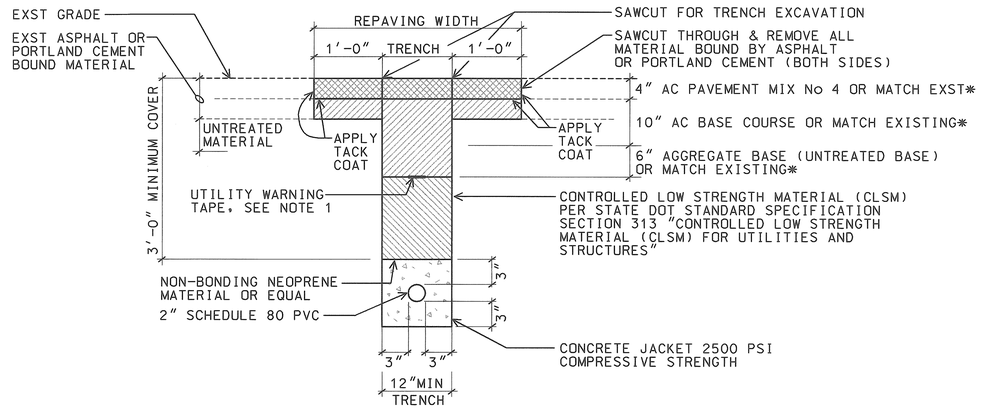

* MINIMUM THICKNESS OR REPLACE TO EXISTING THICKNESS IF GREATER.

B / E48 TYPICAL PAVEMENT RESTORATION IN STATE HIGHWAY
NTS
98058KDA

B1 / E48 SIMILAR EXCEPT w/ 2 CONDUITS

NOTES:

1. 8 MIL THICK YELLOW COLORED PLASTIC WARNING TAPE 3" WIDE, ENTIRE LENGTH OF DUCT. TAPE TO HAVE CONTINUOUS METALLIC BACKING AND CORROSION RESISTANT FOIL CORE. WARNING AND IDENTIFICATION TO BE IMPRINTED ON TAPE AND SHALL READ "CAUTION BURIED ELECTRIC CABLE BELOW". MESSAGE SHALL BE REPEATED APPROXIMATELY EVERY TEN FEET.
2. TYPE "A" BACKFILL: BEACH SAND, EARTH OR EARTH AND GRAVEL USED, THE MAXIMUM ROCK SIZE SHALL BE 1" AND THE MIXTURE SHALL CONTAIN NOT MORE THAN 50% BY VOLUME OF ROCK PARTICLES.

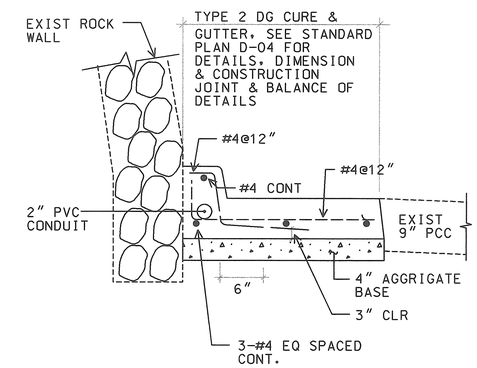

E / E48 TYPE 2DG CURB & GUTTER
NOT TO SCALE
98058KDA

H-1 B/L STA. 109+00 TO 132+00
IB & OB.

* MINIMUM THICKNESS OR REPLACE TO EXISTING THICKNESS IF GREATER.

C / E48 TYPICAL PAVEMENT RESTORATION IN STATE HIGHWAY
NTS
98058KDA

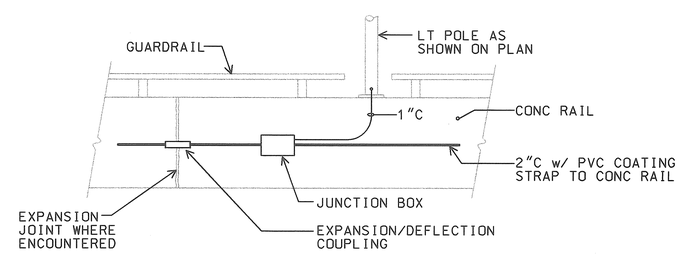

D / E48 JUNCTION BOX MOUNTING DETAIL
NOT TO SCALE
98058KEL

AS-BUILT
4/4/03
DATE

R.C. KATAHARA
LICENSED PROFESSIONAL ENGINEER
No. 3181-E
HAWAII, U.S.A.

THIS WORK WAS PREPARED BY ME OR UNDER MY SUPERVISION.
4/25/98
MK ENGINEERS, LTD.

STATE OF HAWAII
DEPARTMENT OF TRANSPORTATION
HIGHWAYS DIVISION

DUCT SECTIONS

HIGHWAY LIGHTING SAFETY IMPROVEMENTS
INTERSTATE ROUTE H-1
KEEAUMOKU STREET TO AINAKOA AVE

PROJECT NO. STP-0300(66)

SCALE: AS NOTED DATE: JANUARY 1999

SHEET No. E48 OF 56 SHEETS

FED. ROAD DIST. NO.	STATE	FED. AID PROJ. NO.	FISCAL YEAR	SHEET NO.	TOTAL SHEETS
HAWAII	HAW.	STP-0300(66)	1998		

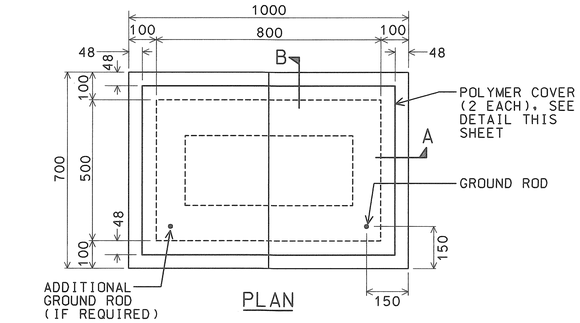

PLAN

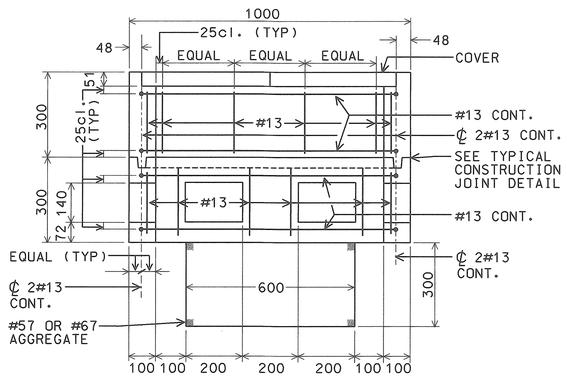

SECTION A-A

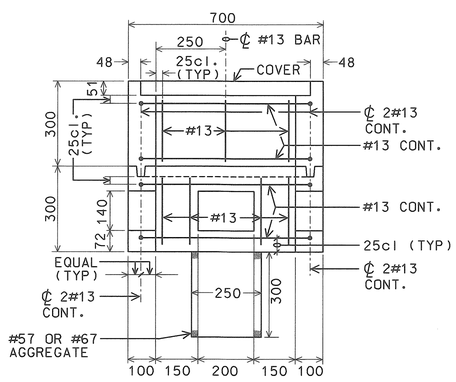

SECTION B-B

A / E49 TYPE "B" PULLBOX (OLD TYPE "C")

SCALE: 1:100

98058KDE

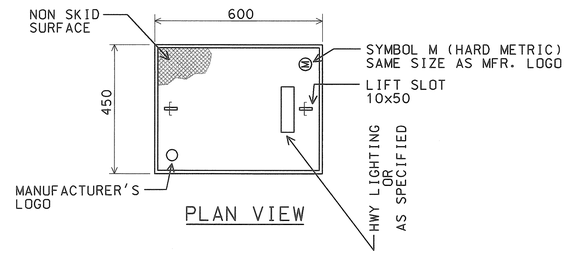

PLAN VIEW

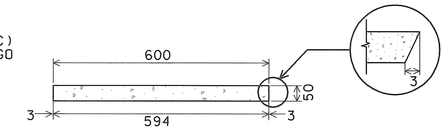

ELEVATION

POLYMER CONCRETE COVER

NOT TO SCALE

98058KDE

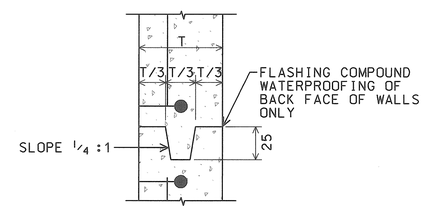

TYPICAL CONSTRUCTION JOINT DETAIL

NOT TO SCALE

98058KDE

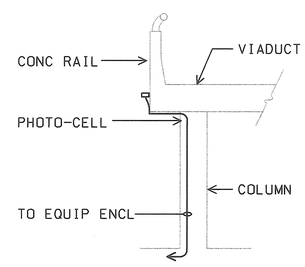

C / E49 PHOTO-CELL MTG DETAIL

NOT TO SCALE

98058KEP

GENERAL NOTES:

1. ALL PRE-CAST CONCRETE PULLBOXES SHALL BE MANUFACTURED IN TWO PIECES.
2. THE PULLBOX WITH COVER SHALL BE CAPABLE OF SUPPORTING AN MS 18 LOADING.
3. THE MAXIMUM WEIGHT OF THE PULLBOX COVER SHALL NOT EXCEED 27 KILOGRAMS.
4. THE OPENINGS FOR THE CONDUITS ON ALL PULLBOXES SHALL BE PRE-CAST CONCRETE KNOCKOUTS.
5. AFTER INSTALLING THE CONDUITS IN THE OPENINGS OF THE PULLBOXES, THE CONTRACTOR SHALL FILL THE EXCESS OPENING IN THE PRE-CAST KNOCKOUTS WITH CONCRETE MORTAR.
6. PRIOR TO INSTALLING THE PULLBOXES, THE CONTRACTOR SHALL LEVEL THE BOTTOM OF THE TRENCH AND ACHIEVE A MINIMUM OF 95% RELATIVE COMPACTION OF THE BOTTOM OF THE TRENCH.
7. ALL CONCRETE SHALL BE CLASS A (25MPa, MINIMUM).
8. REBARS SHALL BE GRADE 300 AND ALL LAPPED SPLICES SHALL BE 360mm MINIMUM.
10. THE #57 OR #67 SIZE AGGREGATE SHALL CONFORM TO LATEST VERSION OF AASHTO M43 (ASTM D 448).

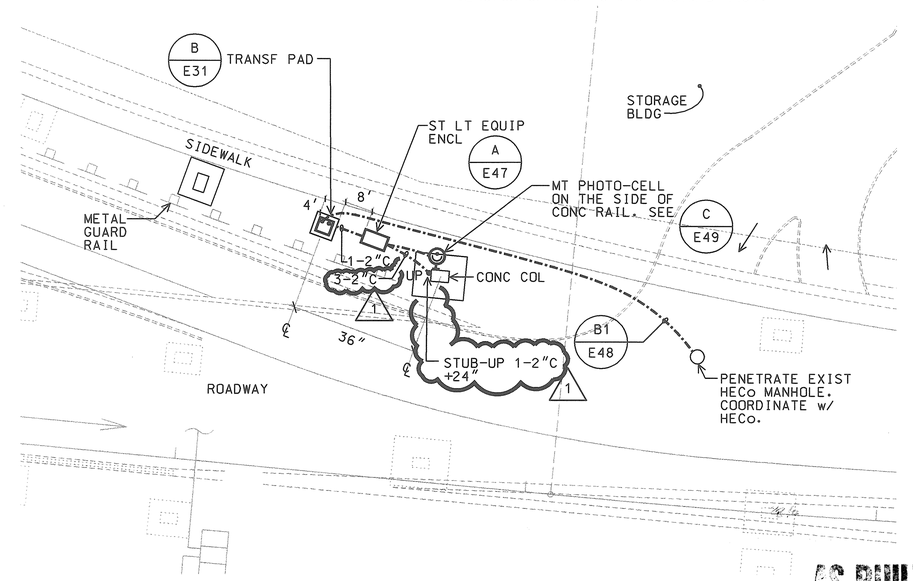

B / E49 TRANSF PAD & ENCL. PLAN

SCALE: 1" = 20'

98058KEO

AS-BUILT 8/19/03

DATE	REV	DESCRIPTION
8/16/99	1	ADD 1-2"C FOR FUT. UNDERPASS LTG

STATE OF HAWAII
DEPARTMENT OF TRANSPORTATION
HIGHWAYS DIVISION

PULLBOX DETAILS

HIGHWAY LIGHTING SAFETY IMPROVEMENTS
INTERSTATE ROUTE H-1
KEEAUMOKU STREET TO AINAKOA AVE

PROJECT NO. STP-0300(66)

SCALE: AS NOTED DATE: JANUARY 1999

R.C. KATAHARA LICENSED PROFESSIONAL ENGINEER No. 3181-E HAWAII, U.S.A.

THIS WORK WAS PREPARED BY ME OR UNDER MY SUPERVISION.
11/25/98
MK ENGINEERS, LTD.

SHEET No. E49 OF 56 SHEETS

CO-E49

FED. ROAD DIST. NO.	STATE	FED. AID PROJ. NO.	FISCAL YEAR	SHEET NO.	TOTAL SHEETS
HAWAII	HAW.	STP-0300(66)	1998		

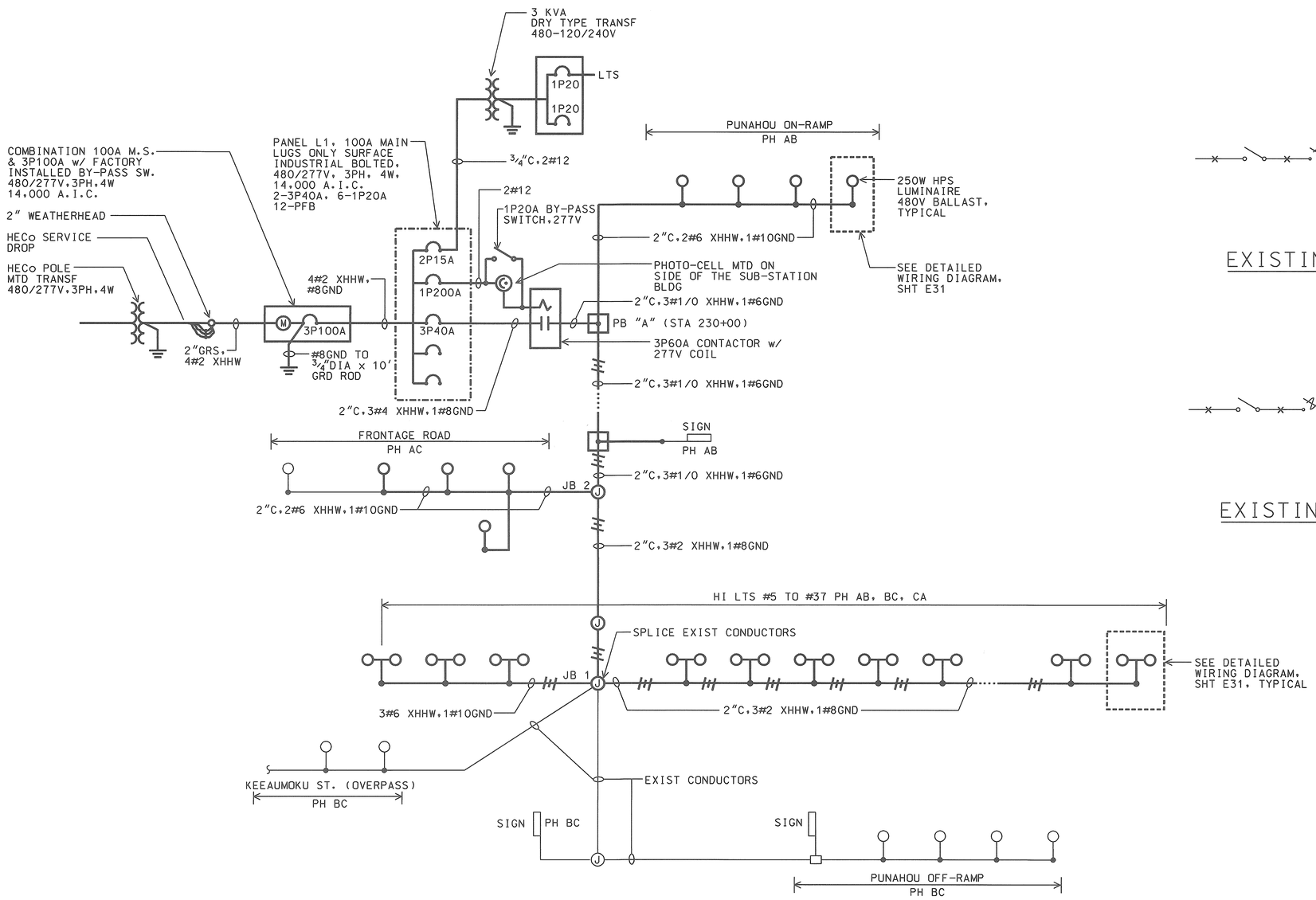

ONE-LINE DIAGRAM - MAKIKI SUB-STATION

98058K00

NOTES:

1. ——— LIGHT LINES INDICATE EXISTING WORK.
   ——— BOLD LINES INDICATE NEW WORK.

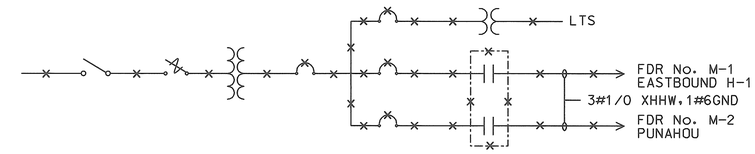

EXISTING ONE-LINE DIAGRAM: MAKIKI

98058-7L

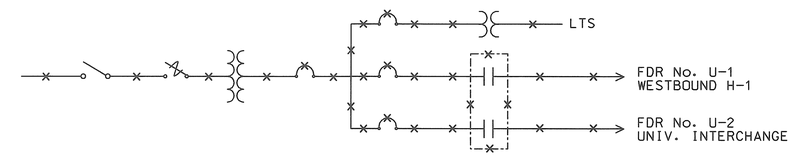

EXISTING ONE-LINE DIAGRAM: UNIVERSITY

98058-8L

AS-BUILT
2/3/03
DATE

A.C. KATAHARA
LICENSED PROFESSIONAL ENGINEER
No. 3181-E
HAWAII, U.S.A.

THIS WORK WAS PREPARED BY ME OR UNDER MY SUPERVISION.
11/25/98
MK ENGINEERS, LTD.

STATE OF HAWAII
DEPARTMENT OF TRANSPORTATION
HIGHWAYS DIVISION

ONE-LINE DIAGRAM -
MAKIKI SUB-STATION
HIGHWAY LIGHTING SAFETY IMPROVEMENTS
INTERSTATE ROUTE H-1
KEEAUMOKU STREET TO AINAKOA AVE

PROJECT NO. STP-0300(66)

SCALE: AS NOTED DATE: JANUARY 1999

SHEET No. E50 OF 56 SHEETS

FED. ROAD DIST. NO.	STATE	FED. AID PROJ. NO.	FISCAL YEAR	SHEET NO.	TOTAL SHEETS
HAWAII	HAW.	STP-0300(66)	1998		

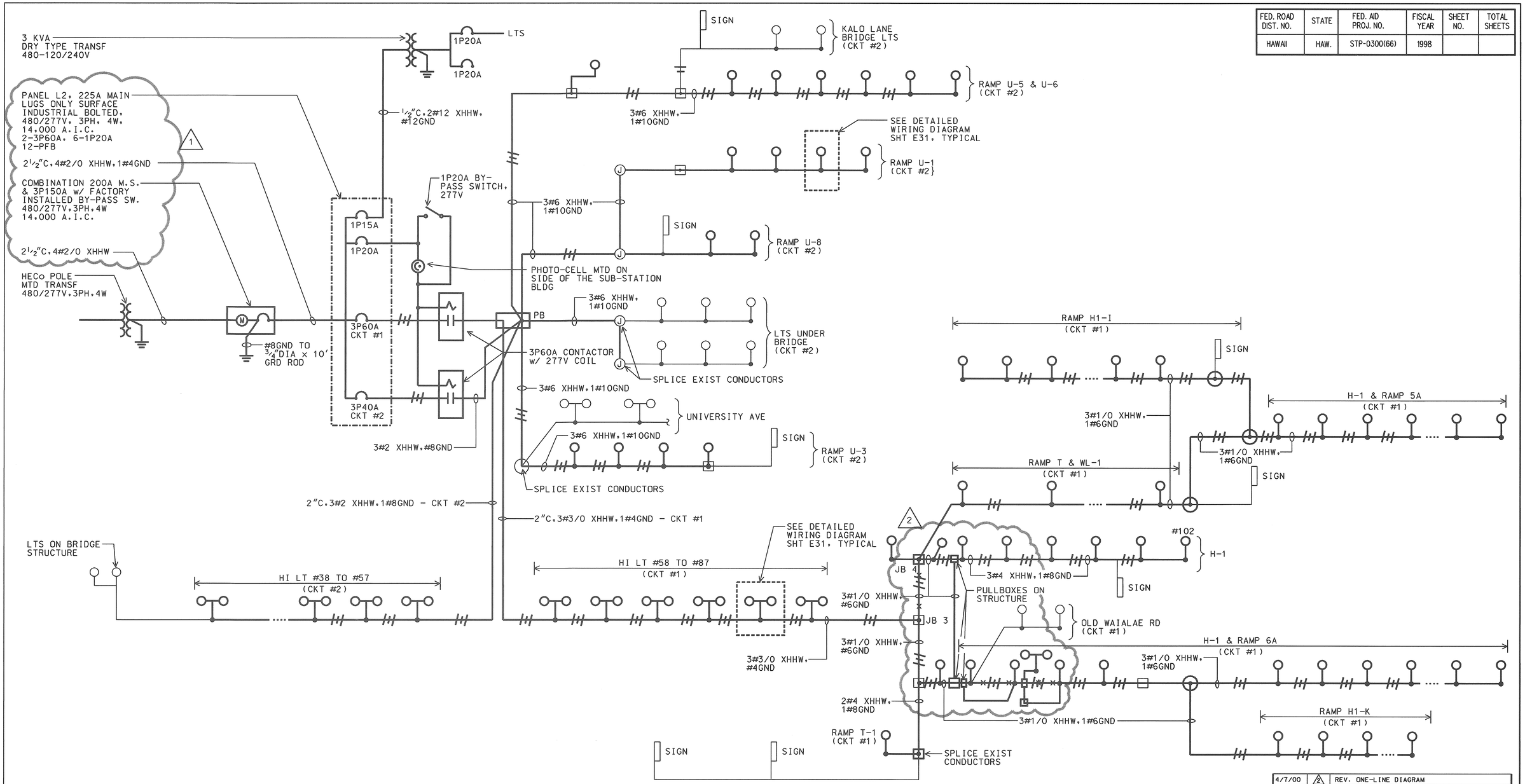

ONE-LINE DIAGRAM - UNIVERSITY SUB-STATION

98058KDN

NOTES:

1. ——— LIGHT LINES INDICATE EXISTING WORK.
   ——— BOLD LINES INDICATE NEW WORK.

DATE	REV	DESCRIPTION
4/7/00	2	REV. ONE-LINE DIAGRAM
8/16/99	1	REV. ONE-LINE DIAGRAM

STATE OF HAWAII
DEPARTMENT OF TRANSPORTATION
HIGHWAYS DIVISION

ONE-LINE DIAGRAM -
UNIVERSITY SUB-STATION
HIGHWAY LIGHTING SAFETY IMPROVEMENTS
INTERSTATE ROUTE H-1
KEEAUMOKU STREET TO AINAKOA AVE

PROJECT NO. STP-0300(66)

SCALE: AS NOTED DATE: JANUARY 1999

R.C. KATAHARA
LICENSED PROFESSIONAL ENGINEER
No. 3181-E
HAWAII, U.S.A.

AS-BUILT
2/4/03
DATE

THIS WORK WAS PREPARED BY ME OR UNDER MY SUPERVISION.
4/27/98
MK ENGINEERS, LTD.

SHEET No. E51 OF 56 SHEETS

CO-E51

FED. ROAD DIST. NO.	STATE	FED. AID PROJ. NO.	FISCAL YEAR	SHEET NO.	TOTAL SHEETS
HAWAII	HAW.	STP-0300(66)	1998		

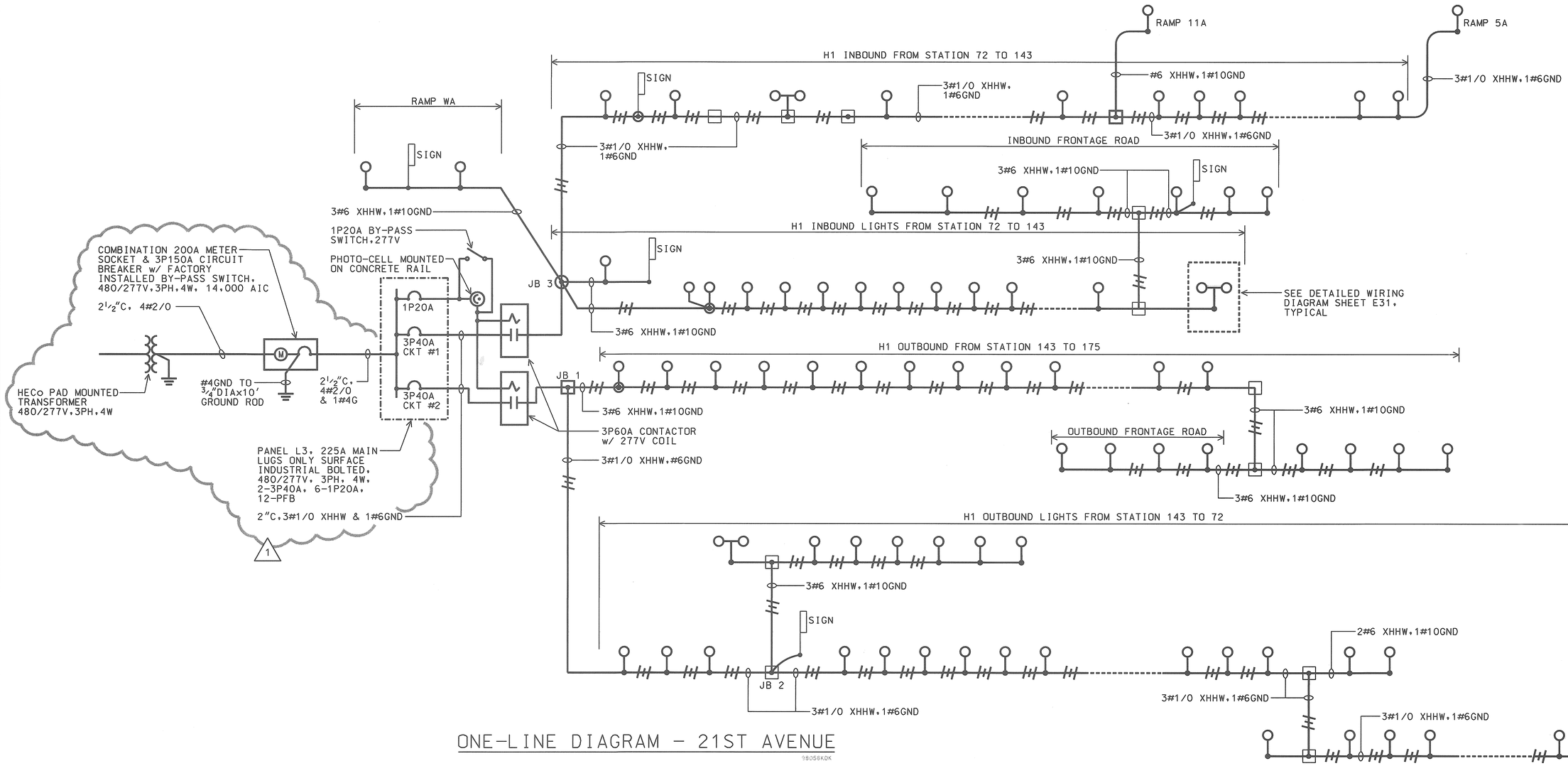

ONE-LINE DIAGRAM - 21ST AVENUE

98058KDK

NOTES:

1. ——— LIGHT LINES INDICATE EXISTING WORK.
   ——— BOLD LINES INDICATE NEW WORK.

DATE	REV	DESCRIPTION
8/16/99	1	REV. ONE - LINE DIAGRAM

STATE OF HAWAII
DEPARTMENT OF TRANSPORTATION
HIGHWAYS DIVISION

ONE-LINE DIAGRAM - 21ST AVENUE

HIGHWAY LIGHTING SAFETY IMPROVEMENTS
INTERSTATE ROUTE H-1
KEEAUMOKU STREET TO AINAKOA AVE

PROJECT NO. STP-0300(66)

SCALE: AS NOTED DATE: JANUARY 1999

SHEET No. E52 OF 56 SHEETS

R.C. KATAHARA
LICENSED PROFESSIONAL ENGINEER
No. 3181-E
HAWAII, U.S.A.

AS-BUILT
2/4/03
DATE

THIS WORK WAS PREPARED BY ME OR UNDER MY SUPERVISION.
R.C. Katahara 11/25/98
MK ENGINEERS, LTD.

C0-E52

FED. ROAD DIST. NO.	STATE	FED. AID PROJ. NO.	FISCAL YEAR	SHEET NO.	TOTAL SHEETS
HAWAII	HAW.	STP-0300(66)	1998		

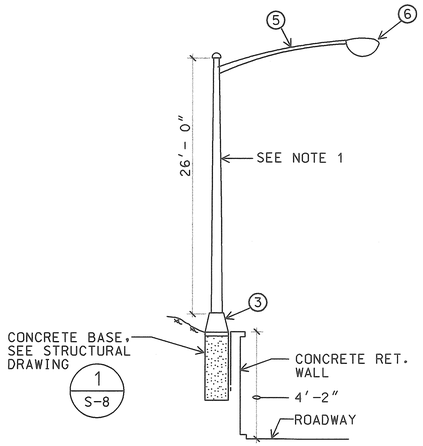

A / E53 STREET LIGHT POLE MTG DETAIL
NOT TO SCALE
98058KDP

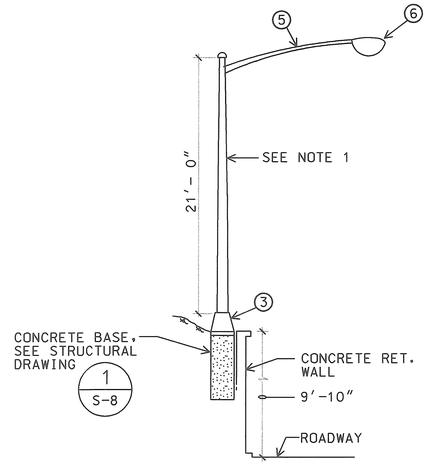

B / E53 STREET LIGHT POLE MTG DETAIL
NOT TO SCALE
98058KDQ

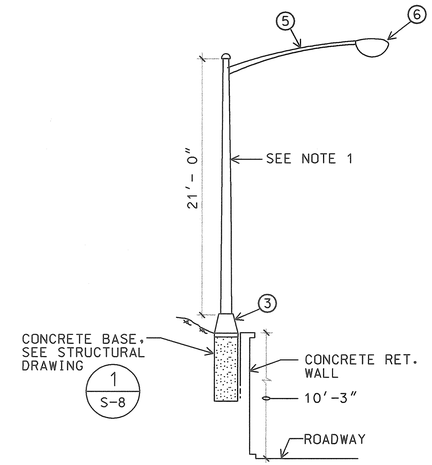

C / E53 STREET LIGHT POLE MTG DETAIL
NOT TO SCALE
98058KDR

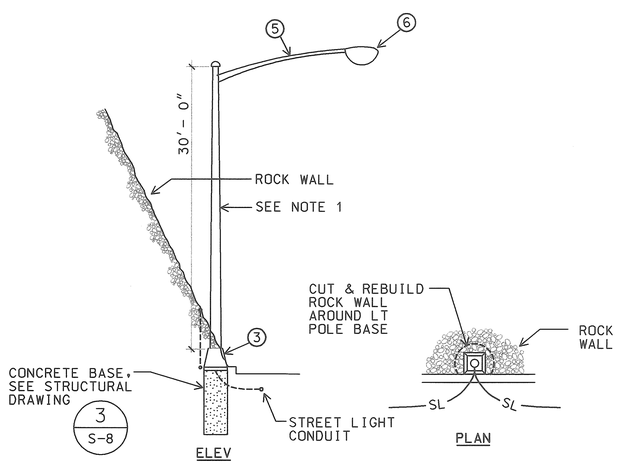

D / E53 STREET LIGHT POLE MTG DETAIL
NOT TO SCALE
98058KDS

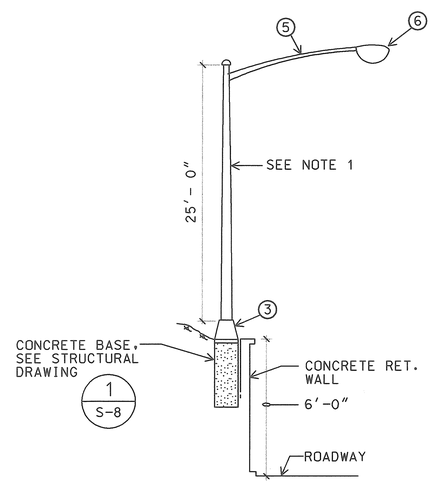

E / E53 STREET LIGHT POLE MTG DETAIL
NOT TO SCALE
98058KDT

NOTES:

1. SATIN BRUSHED FINISH ALUMINUM POLE WITH INTERNALLY MOUNTED FACTORY INSTALLED VIBRATION DAMPER. MUST WITHSTAND 100 MPH WIND VELOCITY WITH 1.3 GUST FACTOR PER AASHTO & BE FREE FROM WHITE RUST.

AS-BUILT
2/4/03
DATE

R.C. KATAHARA
LICENSED PROFESSIONAL ENGINEER
No. 3181-E
HAWAII, U.S.A.

THIS WORK WAS PREPARED BY ME OR UNDER MY SUPERVISION.
R.C. Katahara 11/25/98
MK ENGINEERS, LTD.

STATE OF HAWAII
DEPARTMENT OF TRANSPORTATION
HIGHWAYS DIVISION

STREET LIGHT POLE DETAILS

HIGHWAY LIGHTING SAFETY IMPROVEMENTS
INTERSTATE ROUTE H-1
KEEAUMOKU STREET TO AINAKOA AVE

PROJECT NO. STP-0300(66)

SCALE: AS NOTED DATE: JANUARY 1999

SHEET No. E53 OF 56 SHEETS

FED. ROAD DIST. NO.	STATE	FED. AID PROJ. NO.	FISCAL YEAR	SHEET NO.	TOTAL SHEETS
HAWAII	HAW.	STP-0300(66)	1998		

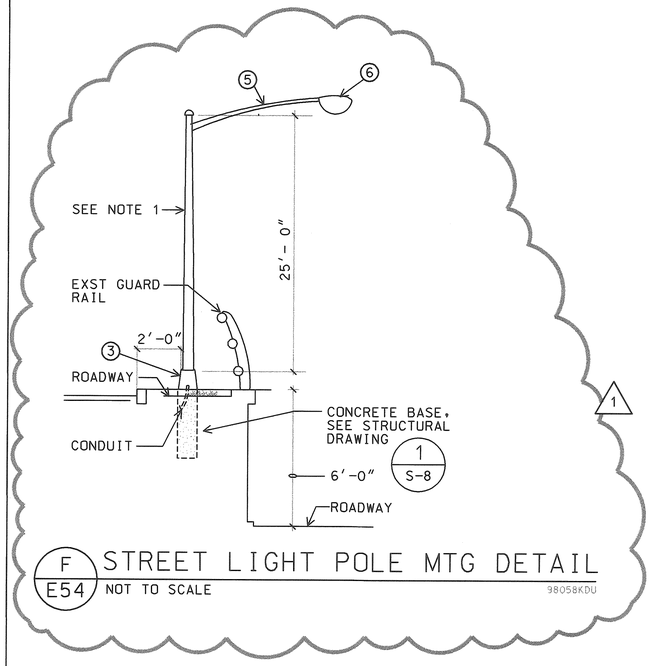

F / E54 STREET LIGHT POLE MTG DETAIL
NOT TO SCALE
98058KDU

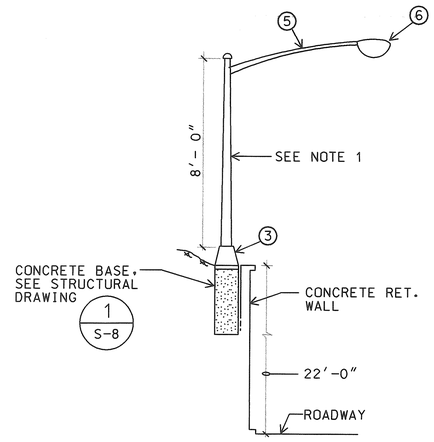

G / E54 STREET LIGHT POLE MTG DETAIL
NOT TO SCALE
98058KDV

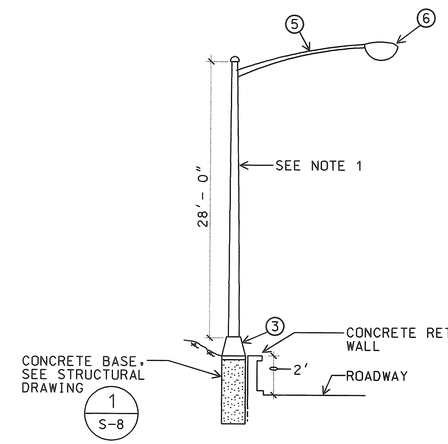

H / E54 STREET LIGHT POLE MTG DETAIL
NOT TO SCALE
98058KDW

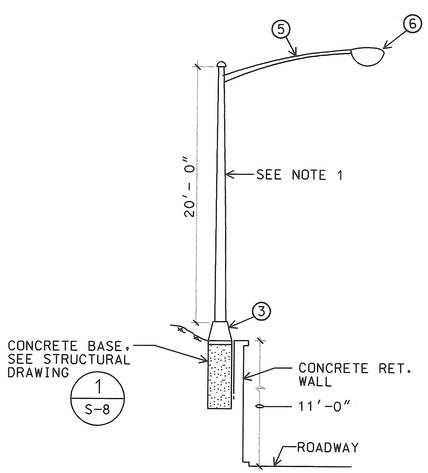

J / E54 STREET LIGHT POLE MTG DETAIL
NOT TO SCALE
98058KDX

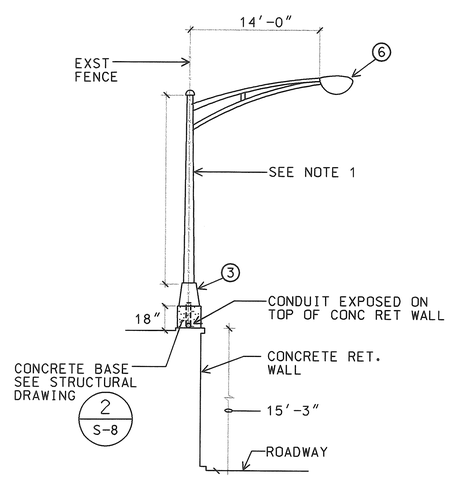

K / E54 STREET LIGHT POLE MTG DETAIL
NOT TO SCALE
98058KDY

NOTES:

1. SATIN BRUSHED FINISH ALUMINUM POLE WITH INTERNALLY MOUNTED FACTORY INSTALLED VIBRATION DAMPER. MUST WITHSTAND 100 MPH WIND VELOCITY WITH 1.3 GUST FACTOR PER AASHTO & BE FREE FROM WHITE RUST.

AS-BUILT
2/4/03

R.C. KATAHARA
LICENSED PROFESSIONAL ENGINEER
No. 3181-E
HAWAII, U.S.A.

THIS WORK WAS PREPARED BY ME OR UNDER MY SUPERVISION.
5/26/04
NK ENGINEERS, LTD.

DATE	REV	DESCRIPTION
12/17/99	1	REV. LOCATION OF LT POLE

STATE OF HAWAII
DEPARTMENT OF TRANSPORTATION
HIGHWAYS DIVISION

STREET LIGHT POLE DETAILS

HIGHWAY LIGHTING SAFETY IMPROVEMENTS
INTERSTATE ROUTE H-1
KEEAUMOKU STREET TO AINAKOA AVE

PROJECT NO. STP-0300(66)

SCALE: AS NOTED DATE: JANUARY 1999

SHEET No. E54 OF 56 SHEETS

FED. ROAD DIST. NO.	STATE	FED. AID PROJ. NO.	FISCAL YEAR	SHEET NO.	TOTAL SHEETS
HAWAII	HAW.	STP-0300(66)	1998		

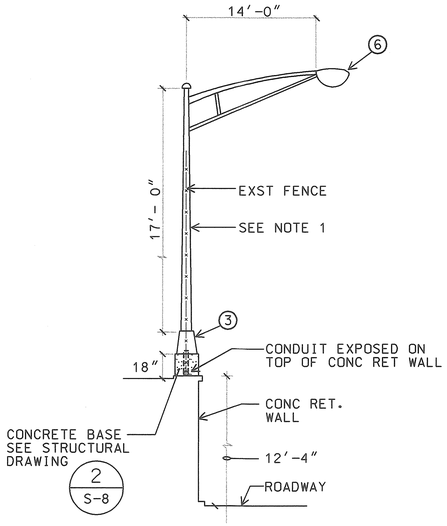

L / E55 STREET LIGHT POLE MTG DETAIL
NOT TO SCALE
98058KDZ

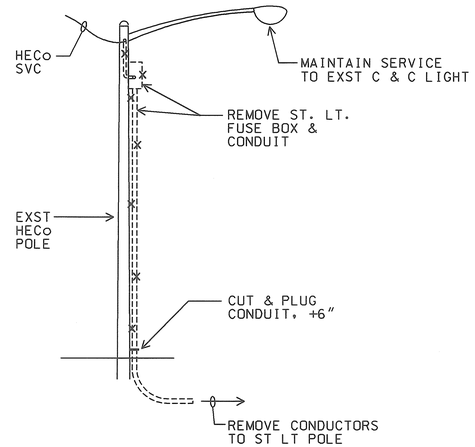

M / E55 STREET LIGHT SERVICE CONNECTION REMOVAL WORK
NOT TO SCALE
98058KEA

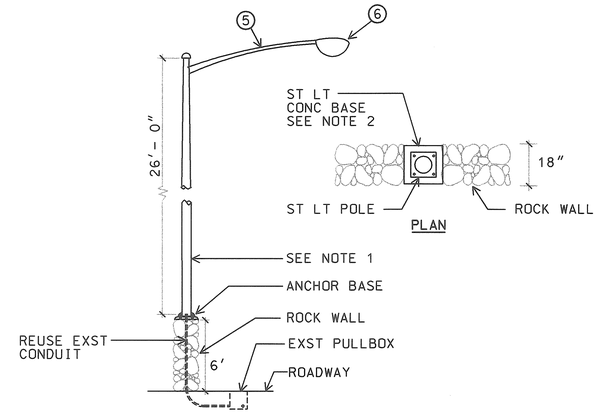

N / E55 STREET LIGHT POLE MTG DETAIL
NOT TO SCALE
98058KEB

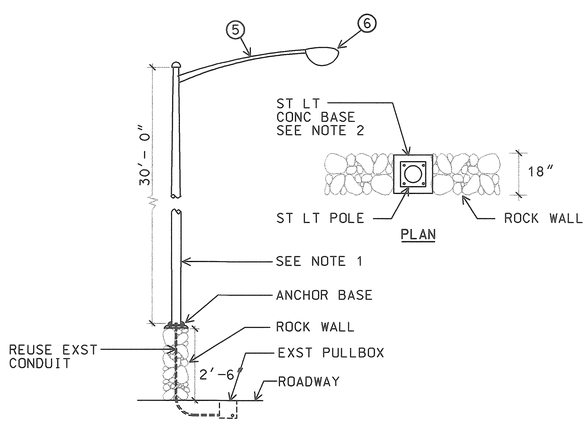

P / E55 STREET LIGHT POLE MTG DETAIL
NOT TO SCALE
98058KEC

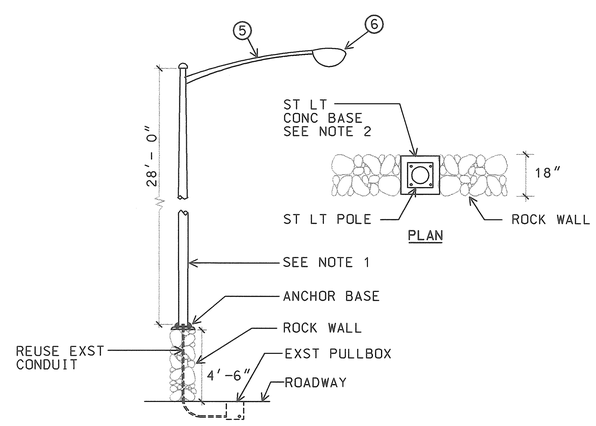

Q / E55 STREET LIGHT POLE MTG DETAIL
NOT TO SCALE
98058KEH

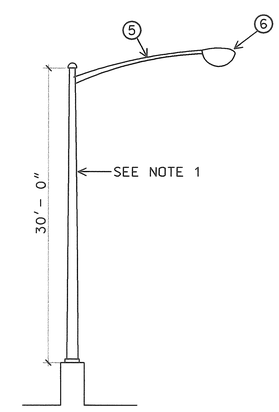

R / E55 STREET LIGHT POLE MTG DETAIL
NOT TO SCALE
98058KEI

NOTES:

1. SATIN BRUSHED FINISH ALUMINUM POLE WITH INTERNALLY MOUNTED FACTORY INSTALLED VIBRATION DAMPER. MUST WITHSTAND 100 MPH WIND VELOCITY WITH 1.3 GUST FACTOR PER AASHTO & BE FREE FROM WHITE RUST.
2. PEDESTAL TO MATCH EXISTING WALL. REPAIR WALL TO MATCH EXISTING CONDITION.

AS-BUILT
2/4/03
DATE

THIS WORK WAS PREPARED BY ME OR UNDER MY SUPERVISION.
11/25/98
MK ENGINEERS, LTD.

R.C. KATAHARA
LICENSED PROFESSIONAL ENGINEER
No. 3181-E
HAWAII, U.S.A.

STATE OF HAWAII
DEPARTMENT OF TRANSPORTATION
HIGHWAYS DIVISION

STREET LIGHT POLE DETAILS

HIGHWAY LIGHTING SAFETY IMPROVEMENTS
INTERSTATE ROUTE H-1
KEEAUMOKU STREET TO AINAKOA AVE

PROJECT NO. STP-0300(66)

SCALE: AS NOTED DATE: JANUARY 1999

SHEET No. E55 OF 56 SHEETS

FED. ROAD DIST. NO.	STATE	FED. AID PROJ. NO.	FISCAL YEAR	SHEET NO.	TOTAL SHEETS
HAWAII	HAW.	STP-0300(66)	1998		

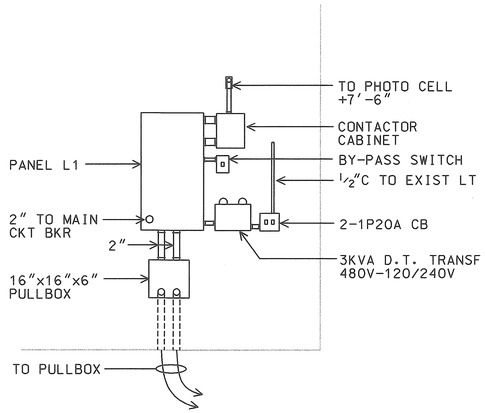

S / E56 ELEC APPARATUS ELEVATION
SCALE: 1/2" = 1'-0"
98058KED

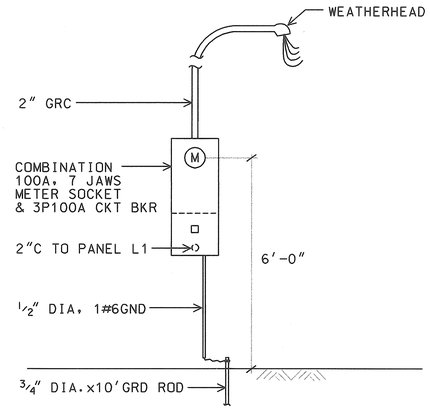

T / E56 SERVICE EQUIPMENT ELEVATION
SCALE: 1/2" = 1'-0"
98058KEE

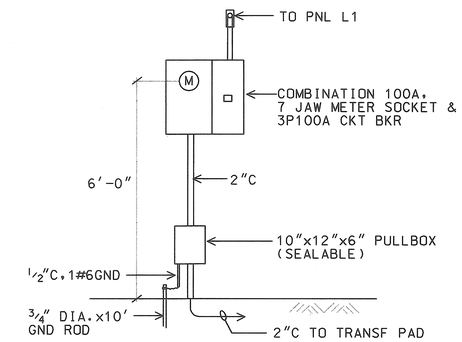

U / E56 SERVICE EQUIPMENT ELEVATION
SCALE: 1/2" = 1'-0"
98058KEF

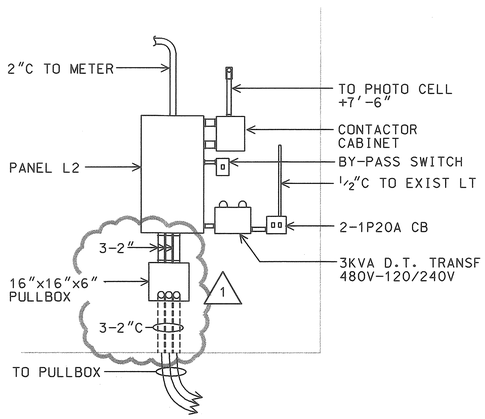

V / E56 ELEC APPARATUS ELEVATION
SCALE: 1/2" = 1'-0"
98058KEG

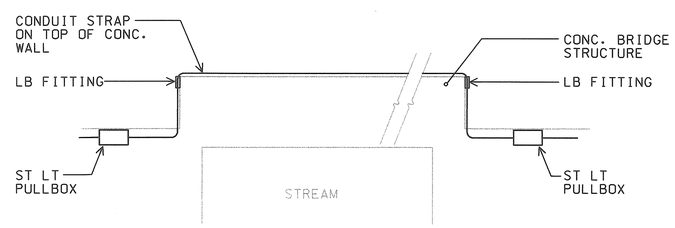

W / E56 CONDUIT MOUNTING DETAIL
NOT TO SCALE
98058KEJ

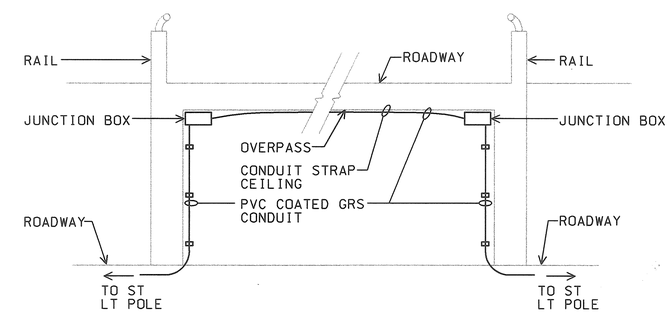

X / E56 JUNCTION BOX MOUNTING DETAIL
NOT TO SCALE
98058KEK

AS-BUILT
2/04/03
DATE

DATE	REV	DESCRIPTION
8/16/99	1	ADD 1-2"C

R.C. KATAHARA
LICENSED PROFESSIONAL ENGINEER
No. 3181-E
HAWAII, U.S.A.

THIS WORK WAS PREPARED BY ME OR UNDER MY SUPERVISION.
11/25/98
MK ENGINEERS, LTD.

STATE OF HAWAII
DEPARTMENT OF TRANSPORTATION
HIGHWAYS DIVISION

ELEVATIONS & DETAILS

HIGHWAY LIGHTING SAFETY IMPROVEMENTS
INTERSTATE ROUTE H-1
KEEAUMOKU STREET TO AINAKOA AVE

PROJECT NO. STP-0300(66)

SCALE: AS NOTED
DATE: JANUARY 1999

SHEET No. E56 OF 56 SHEETS

CO-E56