FED. ROAD DIST. NO.	STATE	FED. AID PROJ. NO.	FISCAL YEAR	SHEET NO.	TOTAL SHEETS
HAWAII	HAW.	NH-IM-0300(142)	2016	3	191

	DESTINATION SIGN NO.	ROUTE NUMBER	MILE POST	DISTURBED AREA (SQ FT)	SIGN FRAME TYPE (See notes 1)	SPAN LENGTH (See note 6)	SIGN SUPPORT POST LENGTH (See notes 2 & 3)	DESTINATION SIGN PANEL SIZE (Width X Depth) (See note 7)	NEW FOUNDATION TYPE	LOCATION MAP	STRUCTURAL DRAWINGS				ELECTRICAL DRAWINGS	TRAFFIC CONTROL DRAWINGS	TEMPORARY SIGN (See notes 5)
											CONSTR. SEQUENCE (See note 4)	DEMOLITION	SIGN GENERAL ARRANGEMENT	DESTINATION SIGN PANEL LAYOUT			
1	H1EB-112	H1	9.25	N/A	A	18'-7¼"	31.6'	14'-6"x10'-0"	Mounted on Bridge	S1.1	S4.1	S3.4	S4.1	S4.13	E3.1	C2.1 - C2.4	None
2	H1EB-113	H1	9.75	N/A	A	18'-7¼"	31.6'	14'-6"x10'-0"	Mounted on Bridge	S1.1	S4.2	S3.4	S4.2	S4.13	E3.2	C3.1 - C3.5	None
3	H1EB-114	H1	10.22	N/A	A	18'-7¼"	31.6'	14'-6"x10'-0"	Mounted on Bridge	S1.2	S4.3	S3.4	S4.3	S4.13	E3.3	C4.1 - C4.2	None
4	H1EB-308	H1	22.82	925	C	58'-0"	25.3' (L); 29.8' (R)	24'-1"x10'-0" (L); 20'-8"x10'-0" (R)	Drilled Shaft	S1.2	S4.4	S3.5	S4.4	S4.14	E3.4	C5.0 - C5.11	None
5	H1WB-402	H1	26.64	N/A	A	18'-7¼"	26.0'	17'-6"x10'-0"	Mounted on Bridge	S1.3	S4.5	S3.5	S4.5	S4.14	E3.5	C6.1 - C6.3	C1.1
6	H1WB-418	H1	20.34	600	A	29'-7¼"	31.0'	23'-0"x10'-0"	Spread Footing	S1.3	S4.6	S3.5	S4.6	S4.14	E3.7	C7.0 - C7.4	C1.1
7	H1WB-424	H1	19.08	800	A	33'-7¼"	27.1'	24'-6"x13'-0"	Drilled Shaft	S1.4	S4.7	S3.6	S4.7	S4.15	E3.7	C8.0 - C8.17	None
8	H1WBR-451	H1	RAMP	1125	B	21'-7¼" (L); 19'-7¼" (R)	28.25'	12"x10'-0" (L); 11'-6"x10'-0" (R)	Spread Footing	S1.4	S4.8	S3.6	S4.8	S4.15	E3.6	C9.0 - C9.7	None
9	H1WB-605	H1	5.1	1200	C	80'-0"	30.0' (L&R)	24'-0"x10'-0"	Spread Footing	S1.5	S4.9	S3.7	S4.9	S4.16	E3.9	C10.1 - C10.13	None
10	78EBR-822	78	RAMP	800	B	31'-7¼" (L); 31'-7¼" (R)	29.7'	17.5'x12.5' (L); 17.5'x12.5' (R)	Spread Footing	S1.5	S4.10	S3.8	S4.10	S4.16/S4.17	E3.9	C11.0 - C11.3	C1.1
11	78WB-851	78	RAMP	600	A	22'-7¼"	27.9'	14'-6"x10'-0"	Spread Footing	S1.6	S4.11	S3.8	S4.11	S4.17	E3.8	C12.0 - C12.4	None
12	78WBR-871	78	RAMP	1200	C	76'-0"	30.1' (L&R)	20'x10.5' (L); 16'x10.5' (C); 10.5'x10.5' (R)	Spread Footing	S1.6	S4.12	S3.9	S4.12	S4.17	E3.10	C13.1 - C13.12	C1.1

Notes:

1. TYPE "A": Cantilever Destination Sign
   TYPE "B": Cantilever Destination Sign on both sides
   TYPE "C": Two Post Destination Sign
2. The Contractor shall verify final field elevations prior to fabrication of posts and set final post lengths.
3. The length provided is from top of concrete pedestal to top of the sign truss panel.
4. The construction sequence as listed on sheet S4.1 to S4.12 is for informational purposes only. The actual construction sequence is at the discretion of the Contractor.
5. Where new sign structures are to be located at the same locations as the existing structure, the existing foundation shall be completely removed prior to constructing new foundation. For the signs that have important direction information, temporary signs is required to be erected prior to commencement of demolition work. See the sheet listed for the detail layout of the temporary sign panel.
6. The Contractor shall verify the span lengths prior to fabrication of the sign truss frame.
7. The downward arrow on destination signs shall be lined up with the center of lane. The Contractor shall verify the size of the destination sign prior to the construction.

TOTAL DISTURBED AREA
≈ 7250 SQ FT = 0.17 ACRE

KEN KAZUO HAYASHIDA
LICENSED PROFESSIONAL ENGINEER
No. 6818-S
HAWAII, U.S.A.

EXPIRATION DATE OF THE LICENSE 4/30/2018
THIS WORK WAS PREPARED BY ME OR UNDER MY SUPERVISION

STATE OF HAWAII
DEPARTMENT OF TRANSPORTATION
HIGHWAYS DIVISION

SUMMARY CHART OF DESTINATION SIGNS

INTERSTATE ROUTE H-1, H-2 AND H201
DESTINATION SIGN UPGRADE / REPLACEMENT, PHASE 2
Federal Aid Project NO. - NH-IM-0300(142)
Scale: As Shown Date: May 2016

SHEET No. S0.2 OF 191 SHEETS

P:\Drafting\2016-07-21_2239 Dot H1 H2 Signs Phase 2\02_2239_S00-2.dwg, 10/6/2016 7:32:18 AM, tamanaha

STANDARD PLANS SUMMARY

FED. ROAD DIST. NO.	STATE	FED. AID PROJ. NO.	FISCAL YEAR	SHEET NO.	TOTAL SHEETS
HAWAII	HAW.	NH-IM-0300(142)	2016	4	191

STANDARD PLAN NO.	TITLE	DATE
B-01 ●	NOTES & MISCELLANEOUS DETAILS	05/31/07
B-03	BACKFILL DETAILS AT EARTH RETAINING STRUCTURES	05/31/07
B-12	PRESTRESSED CONCRETE PILES & COMPRESSION SPLICE	05/31/07
	CAN DETAILS	
B-12A	PRESTRESSED CONCRETE PILES, PILE & COMPRESSION	05/31/07
	SPLICE CAN DETAILS & NOTES	
B-12B	PILE INTERACTION DIAGRAM	05/31/07
B-13	PRESTRESSED CONCRETE PILE BUILD-UP DETAILS	05/31/07

D-01	CATTLE GATE	05/31/07
D-02	CHAIN LINK FENCE WITH TOPRAIL	05/31/07
D-03 ●	CHAIN LINK FENCE WITHOUT TOPRAIL	05/31/07
D-04	WIRE FENCE WITH METAL POSTS	05/31/07
D-05	TYPICAL DETAILS OF CURBS AND/OR GUTTERS	05/31/07
D-06	TYPICAL DETAIL OF REINFORCED CONCRETE DROP DRIVEWAY	05/31/07
D-07	CENTERLINE AND REFERENCE SURVEY MONUMENTS	05/31/07
D-08	STREET SURVEY MONUMENT	05/31/07
D-15	CONCRETE SIDEWALK	05/31/07
D-16	P.C.C. BUS PAD	05/31/07
D-17	P.C.C. BUS PAD	05/31/07
D-18	P.C.C. PAVEMENT LAYOUT	05/31/07
D-19	P.C.C. PAVEMENT W/ PERMEABLE BASE JOINT DETAILS	05/31/07
D-20	P.C.C. PAVEMENT W/ PERMEABLE BASE JOINT DETAILS	05/31/07
D-21	P.C.C. LONGITUDINAL JOINT DETAILS	05/31/07
D-22	P.C.C. CONNECTION TO CURBS AND GUTTERS	05/31/07
D-23	JOINTS	05/31/07

L-01	TREE PLANTING	08/16/06
L-02	TREE PLANTING	08/16/06
L-03	TREE TRANSPLANTING	08/16/06
L-04	PALM PLANTING	08/16/06
L-05	SHRUB PLANTING	08/16/06
L-06	LANDSCAPE DETAILS	08/16/06
L-07	LANDSCAPE DETAILS	08/16/06
L-08	LANDSCAPE DETAILS	08/16/06
L-09	LANDSCAPE DETAILS	08/16/06
L-10	LANDSCAPE DETAILS	08/16/06
L-11	PLANTING NOTES	08/16/06
L-12	IRRIGATION DETAILS	08/16/06
L-13	IRRIGATION DETAILS	08/16/06
L-14	IRRIGATION DETAILS	08/16/06
L-15	IRRIGATION DETAILS	08/16/06
L-16	IRRIGATION DETAILS	08/16/06
L-17	IRRIGATION DETAILS	08/16/06
L-18	IRRIGATION DETAILS	08/16/06
L-19	IRRIGATION DETAILS	08/16/06
L-20	IRRIGATION DETAILS	08/16/06
L-21	IRRIGATION DETAILS	08/16/06
L-22	IRRIGATION DETAILS	08/16/06
L-23	IRRIGATION DETAILS	08/16/06
L-24	IRRIGATION NOTES	08/16/06

STANDARD PLAN NO.	TITLE	DATE
H-01A	TYPE A CATCH BASIN	05/31/07
H-01B	TYPE B CATCH BASIN	05/31/07
H-01C	TYPE C CATCH BASIN	05/31/07
H-01D	TYPE D CATCH BASIN	05/31/07
H-01E	CATCH BASIN SECTIONS	05/31/07
H-02A	TYPE A1 CATCH BASIN	05/31/07
H-02B	TYPE B2 CATCH BASIN	05/31/07
H-02C	TYPE C1 CATCH BASIN	05/31/07
H-02D	TYPE D1 CATCH BASIN	05/31/07
H-02E	CATCH BASIN SECTION	05/31/07
H-03	TYPE A,B, AND C STORM DRAIN MANHOLE	05/31/07
H-04	TYPE D STORM DRAIN MANHOLE	05/31/07
H-05	TYPICAL REINFORCING DETAILS FOR DRAINAGE STRUCTURES	05/31/07
H-06	TYPICAL REINFORCING DETAILS FOR DRAINAGE STRUCTURES	05/31/07
H-07	CATCH BASIN AND MANHOLE CASTINGS	05/31/07
H-08	TYPE 1A-9 AND 1A-9P GRATED DROP INLET	05/31/07
H-09	TYPE 2A-9 AND 2A-9P GRATED DROP INLET	05/31/07
H-10	TYPE A-9 OR A-9P STEEL FRAMES	05/31/07
H-11	TYPE A-9 AND A-9P STEEL GRATES	05/31/07
H-12	TYPE 616144P AND 1211214P GRATED DROP INLET	05/31/07
H-13	TYPE 616166P AND 1211216P GRATED DROP INLET	05/31/07
H-14	TYPE 612144P GRATED DROP INLET	05/31/07
H-15	TYPE 1211214, 1211214P, 1211216, 1211216P STEEL	05/31/07
	FRAME AND GRATES	
H-16	TYPE 61614, 616144P, 61616, 616166P STEEL FRAME	05/31/07
	AND GRATES	
H-17	TYPE 61214 STEEL FRAMES AND GRATES	05/31/07
H-18	TYPE 612144P STEEL GRATES	05/31/07
H-19	TYPE 61614B STEEL FRAME AND GRATES	05/31/07
H-20	CEMENT RUBBLE MASONRY STRUCTURES	05/31/07
H-21	CONCRETE AND CEMENT RUBBLE MASONRY STRUCTURES	05/31/07
H-22	INLET/OUTLET STRUCTURE	05/31/07
H-23	INLET/OUTLET STRUCTURE	05/31/07
H-24	FLARED END SECTION FOR CULVERTS	05/31/07
H-25	FLARED END SECTION FOR CULVERTS	05/31/07
H-26	CONCRETE SPILLWAY INLET	05/31/07
H-27	CAP COUPLING DETAILS STANDARD JOINT	05/31/07
H-28	REINFORCED CONCRETE COLLAR & JACKET	05/31/07
H-29	UNDERDRAIN CLEANOUT STEEL FRAME AND COVER	05/31/07
H-30	UNDERDRAIN CONNECTION TO DRAINAGE STRUCTURE	05/31/07

TE-01 ●	SIGN HEIGHT AND LOCATION	07/11/08
TE-1A ●	SIGN INSTALLATION	07/11/08
TE-02A ●	GALVANIZED FLANGED CHANNEL SIGN POST MOUNTING	05/31/07
TE-02B ●	GALVANIZED FLANGED CHANNEL SIGN POST MOUNTING	05/31/07
TE-02C ●	GALVANIZED FLANGED CHANNEL SIGN POST MOUNTING	05/31/07
TE-03A	GALVANIZED SQUARE TUBE SIGN POST MOUNTING	05/31/07
TE-03B	GALVANIZED SQUARE TUBE SIGN POST MOUNTING	05/31/07
TE-04 ●	REGULATORY SIGNS	07/11/08
TE-05 ●	WARNING SIGNS	07/11/08
TE-06 ●	MISCELLANEOUS SIGNS	07/11/08
TE-07	CONSTRUCTION SIGNS	07/11/08
TE-08	MISCELLANEOUS INTERSECTION SIGNS	07/11/08

STANDARD PLAN NO.	TITLE	DATE
TE-09	BIKE ROUTE SIGN & SUPPLEMENTARY PLATES	07/11/08
TE-10 ●	INTERSTATE ROUTE MARKER	07/11/08
TE-11	STATE ROUTE MARKER AND AUXILIARY MARKERS	07/11/08
TE-12 ●	STATE ROUTE MARKER AND BORDER DETAIL FOR	07/11/08
	GUIDE SIGNS	
TE-12A	ROUTE SIGN ASSEMBLIES	07/11/08
TE-13	STREET NAME SIGN ON MAST ARM	07/11/08
TE-14	MISCELLANEOUS REFLECTOR MARKERS	07/11/08
TE-15	OBJECT MARKERS	07/11/08
TE-16	MILE POSTS	07/11/08
TE-17A	CANTILEVER OVERHEAD SIGN ELEVATION & DETAILS	05/31/07
TE-17B	CANTILEVER SIGN FRAME DETAIL AND SECTION	05/31/07
TE-17C	CANTILEVER SIGN FRAME DETAIL	05/31/07
TE-17D	CANTILEVER SIGN FRAME SECTION	05/31/07
TE-17E	CANTILEVER SIGN FRAME DETAILS	05/31/07
TE-18A	TWO POST OVERHEAD SIGN FRAME ELEVATIONS	05/31/07
TE-18B	TWO POST SIGN FRAMING PLAN SECTION	05/31/07
TE-18C	TWO POST SIGN FRAMING SECTIONS AND DETAILS	05/31/07
TE-18D	TWO POST SIGN FRAME DETAILS	05/31/07
TE-18E	TWO POST SIGN FRAME DETAILS	05/31/07
TE-19A	OVERHEAD SIGN FRAMING SCHEDULE	05/31/07
TE-19B	SIGN POST DRILLED SHAFT FOUNDATION	05/31/07
TE-19C	SPREAD FOOTING	05/31/07
TE-19D	SIGN FRAME FOUNDATION SCHEDULE	05/31/07
TE-19D.1	SIGN FRAME FOUNDATION SCHEDULE	05/31/07
TE-19D.2	SIGN FRAME FOUNDATION SCHEDULE	05/31/07
TE-19D.3	SIGN FRAME FOUNDATION SCHEDULE	05/31/07
TE-19D.4	SIGN FRAME FOUNDATION SCHEDULE	05/31/07
TE-19D.5	SIGN FRAME FOUNDATION SCHEDULE	05/31/07
TE-19E	ANCHORAGE DETAILS	05/31/07
TE-19F	ANCHORAGE DETAILS	05/31/07
TE-19G	MISCELLANEOUS SIGN FRAME DETAILS	05/31/07
TE-19H	LUMINAIRE WALKWAY SUPPORT	05/31/07
TE-19J	FIXED MESSAGE LUMINAIRE SUPPORT	05/31/07
TE-19K	MISCELLANEOUS SIGN DETAILS	05/31/07
TE-19L	MISCELLANEOUS SIGN DETAILS	05/31/07
TE-19M	MISCELLANEOUS SIGN FRAME DETAILS	05/31/07
TE-20	SUPPORTS FOR GROUND MOUNTED GUIDE SIGN	05/31/07
TE-20A	SUPPORTS FOR GROUND MOUNTED GUIDE SIGN	05/31/07
TE-20B	SUPPORTS FOR GROUND MOUNTED GUIDE SIGN	05/31/07
TE-20C	SUPPORTS FOR GROUND MOUNTED GUIDE SIGN	05/31/07
TE-21A	SIGN BREAKAWAY MOUNTS	05/31/07
TE-21B	SIGN BREAKAWAY MOUNTS	05/31/07
TE-22	LAMINATED ALUMINUM SIGN PANELS (OVERHEAD)	05/31/07
TE-23	LAMINATED ALUMINUM SIGN PANELS (GROUND MOUNTED)	07/11/08
TE-24	SOLID ALUMINUM EXTRUDED SIGN PANEL AND	05/31/07
	ACCESSORY DETAILS	
TE-25	GUIDE SIGNS LUMINAIRE MOUNTINGS	05/31/07
TE-26 ●	RAISED PAVEMENT MARKERS AND STRIPING	07/11/08
TE-27 ●	RAISED PAVEMENT MARKERS AND STRIPING	07/11/08
TE-28 ●	ENTRANCE AND EXIT PAVEMENT MARKINGS	07/11/08
TE-28A	MISCELLANEOUS PAVEMENT MARKINGS	07/11/08
TE-29	PAVEMENT ARROWS AND SYMBOLS	07/11/08
TE-30	PAVEMENT ALPHABETS, NUMBERS & SYMBOLS	07/11/08
TE-31	PAVEMENT ALPHABETS, NUMBERS & SYMBOLS	07/11/08

STANDARD PLAN NO.	TITLE	DATE
TE-32	TYPE I & II TRAFFIC SIGNAL SYSTEM MISC. DETAILS	05/31/07
TE-33	TYPE II TRAFFIC SIGNAL SYSTEM	08/16/06
TE-33A.1	TYPE II TRAFFIC SIGNAL STANDARD	05/31/07
TE-33A.2	TYPE II TRAFFIC SIGNAL STANDARD	05/31/07
TE-34	LOOP DETECTOR DETAILS	07/11/08
TE-35	LOOP DETECTORS & DUCT DETAILS	07/11/08
TE-36	TRAFFIC SIGNAL DETAILS	07/11/08
TE-37	PULLBOX & COVER DETAILS	07/11/08
TE-37A	TYPE "A" TRAFFIC PULLBOX	05/31/07
TE-37B	TYPE "A" TRAFFIC PULLBOX REINFORCING	05/31/07
TE-37C	TYPE "B" TRAFFIC PULLBOX	05/31/07
TE-37D	TYPE "B" TRAFFIC PULLBOX REINFORCING	05/31/07
TE-37E	TYPE "B" TRAFFIC PULLBOX FOUNDATION	05/31/07
TE-37F	TYPE "C" TRAFFIC PULLBOX	05/31/07
TE-37G	TYPE "C" TRAFFIC PULLBOX REINFORCING	05/31/07
TE-37H	TYPE "C" TRAFFIC PULLBOX FOUNDATION	05/31/07
TE-37J	TRAFFIC PULLBOX COVER AND DETAILS	05/31/07
TE-38	TYPE III TRAFFIC SIGNAL STANDARD	05/31/07
TE-38A.1	TYPE III TRAFFIC SIGNAL STANDARD	05/31/07
TE-38A.2	TYPE III TRAFFIC SIGNAL STANDARD	05/31/07
TE-39	METAL GUARDRAIL CONNECTION TO CONCRETE BARRIER	07/11/08
TE-40	CONCRETE BARRIER TRANSITION	05/31/07
TE-40A	CONCRETE BARRIER TRANSITION SECTIONS	05/31/07
TE-41	GUARDRAIL TYPE 4 (RIGID BARRIER)	05/31/07
TE-42	PORTABLE CONCRETE BARRIER	05/31/07
TE-43	PORTABLE CONCRETE BARRIER	05/31/07
TE-44	GUARDRAIL TYPE 4 MISCELLANEOUS DETAILS	07/11/08
TE-45	BARRICADES	07/11/08
TE-46	DELINEATION & PAVEMENT MARKINGS AT NARROW BRIDGES	07/11/08
TE-47	HIGHWAY LIGHT STANDARD	05/31/07

NOTE:
STANDARD PLANS APPLICABLE TO THIS PROJECT ARE INDICATED BY A "●" NEXT TO THE STANDARD PLAN NO. (FOR EXAMPLE: TE-01 ●)

KEN KAZUO HAYASHIDA
LICENSED PROFESSIONAL ENGINEER
No. 6818-S
HAWAII, U.S.A.

EXPIRATION DATE OF THE LICENSE 4/30/2018
THIS WORK WAS PREPARED BY ME OR UNDER MY SUPERVISION

STATE OF HAWAII
DEPARTMENT OF TRANSPORTATION
HIGHWAYS DIVISION

STANDARD PLANS SUMMARY

INTERSTATE ROUTE H-1, H-2 AND H201
DESTINATION SIGN UPGRADE / REPLACEMENT, PHASE 2
Federal Aid Project NO. - NH-IM-0300(142)
Scale: As Shown Date: May 2016

SHEET No. SO.3 OF 191 SHEETS

J:\Drafting\2016-07-21_2239 Dot H1 H2 Signs Phase 2\04_2239_S00-3.dwg, 10/6/2016 7:32:20 AM, tamanaha

FED. ROAD DIST. NO.	STATE	FED. AID PROJ. NO.	FISCAL YEAR	SHEET NO.	TOTAL SHEETS
HAWAII	HAW.	NH-IM-0300(142)	2016	5	191

ABBREVIATIONS

A.C.	Asphalt Concrete	Max	Maximum
BC	Bottom of Curb	Mech	Mechanical
Blvd.	Boulevard	MH	Manhole
Bot	Bottom	Min	Minimum
Btwn	Between	Misc	Miscellaneous
BW	Bottom of Wall	MH	Manhole
℄	Centerline	M.P.	Mile Post
CJ	Construction Joint	MPH	Miles Per Hour
Cir.	Circular	N/A	Not Applicable
Clr	Clear	No. or #	Number
CMP	Corrugated Metal Pipe	N.I.C.	Not In Contract
Conc	Concrete	NTS	Not To Scale
Cont	Continuous	O.C.	On Center
Dbl	Double	O.D.	Outside Diameter
Dia (D)	Diameter	Opng	Opening
Dwg	Drawing	Opp	Opposite
Ea	Each	Rad	Radius
E.F.	Each Face	Pav't	Pavement
Elev or El	Elevation	PL or ℙ	Plate
Eq	Equal	Ref	Reference
E.W.	Each Way	Reinf.	Reinforced or Reinforcing
Exist or (E)	Existing	Req'd	Required
Ext	Exterior	R.O.W.	Right-of-Way
Fin	Finish	R.O.W.	Right-of-Way
Ft	Foot or Feet	Rt or (R)	Right
Ftg	Footing	SF	Square Feet
Galv	Galvanize	Sht	Sheet
Gnd	Ground	Sp	Spaces or Spacing
Grd	Grade	Sta.	Station
Horiz	Horizontal	TC	Top of Curb
Ht	Height	Temp	Temporary
Hwy	Highway	Thru	Through
I.D.	Inside Diameter	TW	Top of Wall
Lt (L)	Left	Typ	Typical
		UNO	Unless Noted Otherwise
		Vert	Vertical

LEGEND

- Demolition Area
- Existing Concrete
- New Concrete
- New Destination Sign Panel
- Ribbed Sheet Metal
- Existing Sign Posts
- Existing Chain Link Fence
- SLB — Existing Concrete Slab
- Existing Guardrail
- New Guardrail
- TREE — Existing Tree

KEN KAZUO HAYASHIDA
LICENSED PROFESSIONAL ENGINEER
No. 6818-S
HAWAII, U.S.A.

EXPIRATION DATE OF THE LICENSE 4/30/2018
THIS WORK WAS PREPARED BY ME OR UNDER MY SUPERVISION

STATE OF HAWAII
DEPARTMENT OF TRANSPORTATION
HIGHWAYS DIVISION

LEGEND AND ABBREVIATIONS

INTERSTATE ROUTE H-1, H-2 AND H201
DESTINATION SIGN UPGRADE / REPLACEMENT, PHASE 2
Federal Aid Project NO. - NH-IM-0300(142)

Scale: As Shown Date: May 2016

SHEET No. S0.4 OF 191 SHEETS

P:\Drafting\2016-07-21_2239 Dot H1 H2 Signs Phase 2\05_2239_S00-4.dwg, 10/6/2016 7:32:23 AM, tamanaha

FED. ROAD DIST. NO.	STATE	FED. AID PROJ. NO.	FISCAL YEAR	SHEET NO.	TOTAL SHEETS
HAWAII	HAW.	NH-1M-0300(142)	2016	6	191

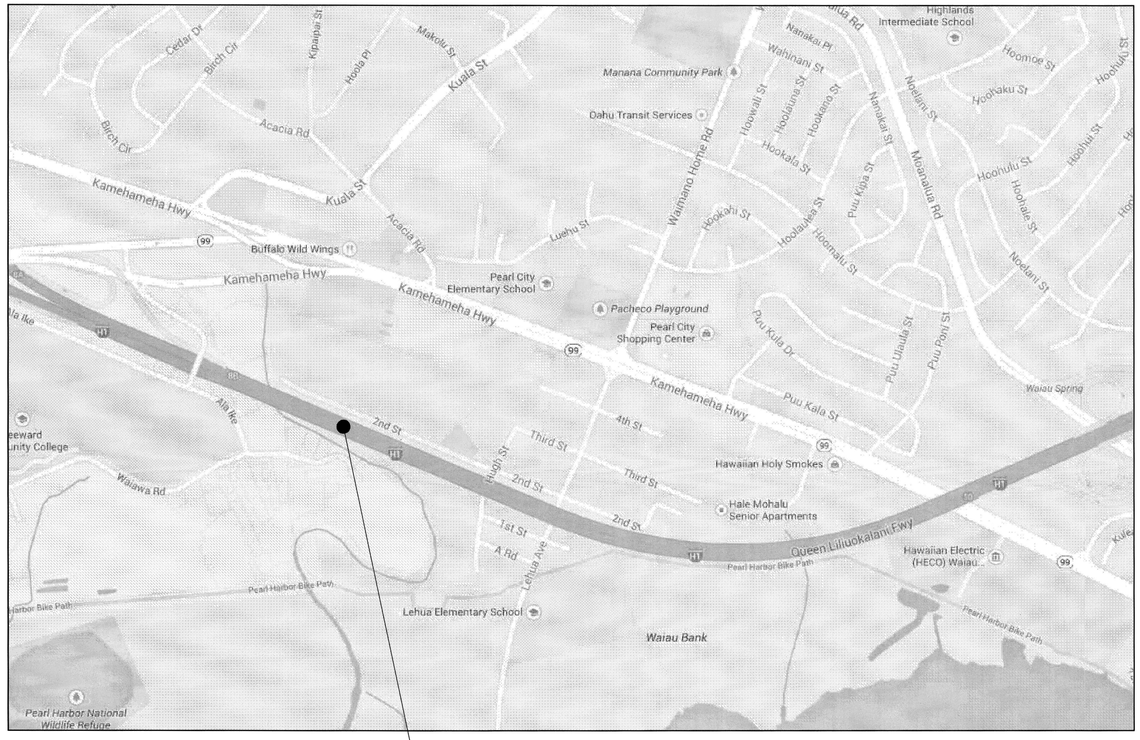

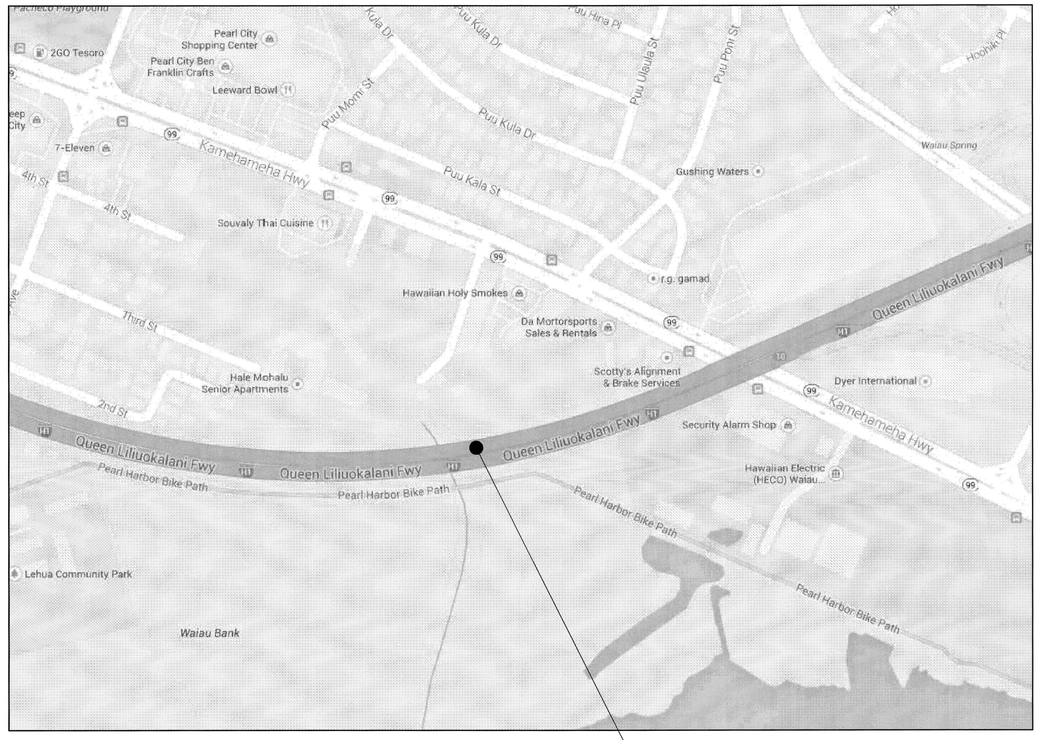



LOCATION MAP - H1EB-112, M.P. 9.25
NTS

1
S1.1 | S1.1

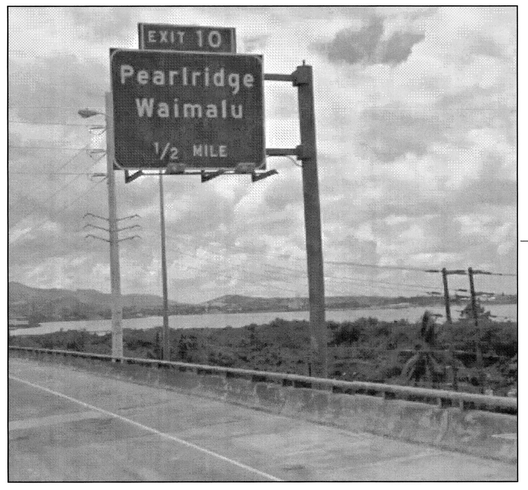

LOCATION MAP - H1EB-113, M.P. 9.75
NTS

2
S1.1 | S1.1

KEN KAZUO HAYASHIDA
LICENSED PROFESSIONAL ENGINEER
No. 6818-S
HAWAII, U.S.A.

EXPIRATION DATE OF THE LICENSE 4/30/2018
THIS WORK WAS PREPARED BY ME OR UNDER MY SUPERVISION

STATE OF HAWAII
DEPARTMENT OF TRANSPORTATION
HIGHWAYS DIVISION

LOCATION MAPS - 1

INTERSTATE ROUTE H-1, H-2 AND H201
DESTINATION SIGN UPGRADE / REPLACEMENT, PHASE 2
Federal Aid Project NO. - NH-IM-0300(142)

Scale: As Shown Date: May 2016

SHEET No. S1.1 OF 191 SHEETS

P:\Drafting\2016-07-21_2239 Dot H1 H2 Signs Phase 2\06_2239_S1-1_S1-6.dwg, 10/6/2016 7:32:27 AM, tamanaha

FED. ROAD DIST. NO.	STATE	FED. AID PROJ. NO.	FISCAL YEAR	SHEET NO.	TOTAL SHEETS
HAWAII	HAW.	NH-1M-0300(142)	2016	7	191

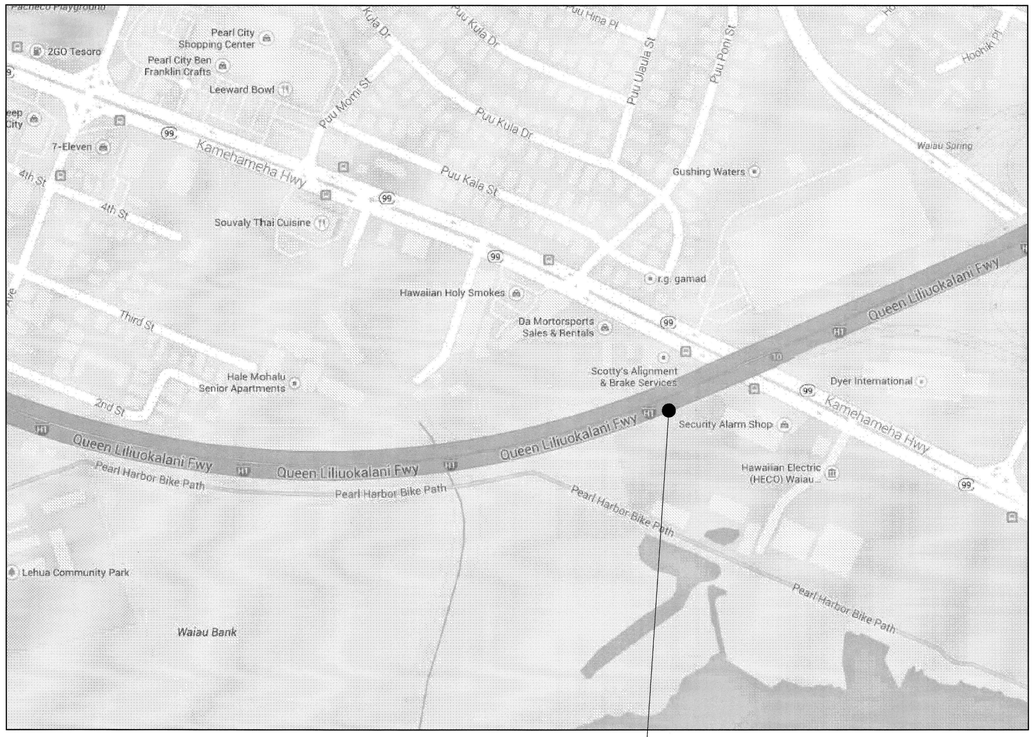

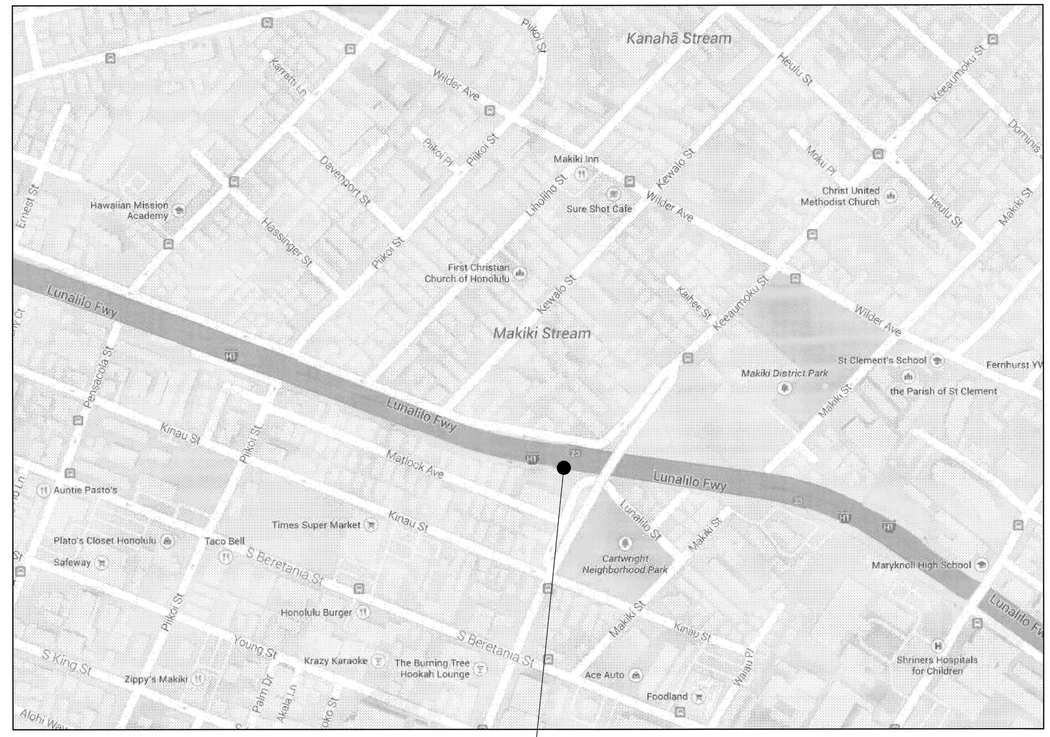

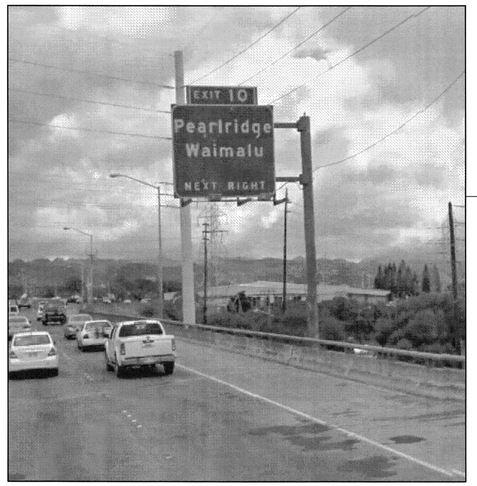

LOCATION MAP - H1EB-114, M.P. 10.22
NTS

1
S1.2 | S1.2



LOCATION MAP - H1EB-308, M.P. 22.82
NTS

2
S1.2 | S1.2

KEN KAZUO HAYASHIDA
LICENSED PROFESSIONAL ENGINEER
No. 6818-S
HAWAII, U.S.A.

EXPIRATION DATE OF THE LICENSE 4/30/2018
THIS WORK WAS PREPARED BY ME OR UNDER MY SUPERVISION

STATE OF HAWAII
DEPARTMENT OF TRANSPORTATION
HIGHWAYS DIVISION

LOCATION MAPS - 2

INTERSTATE ROUTE H-1, H-2 AND H201
DESTINATION SIGN UPGRADE / REPLACEMENT, PHASE 2
Federal Aid Project NO. - NH-IM-0300(142)

Scale: As Shown Date: May 2016

SHEET No. S1.2 OF 191 SHEETS

P:\Drafting\2016-07-21_2239 Dot H1 H2 Signs Phase 2\06_2239_S1_1_S1-6.dwg, 10/6/2016 7:32:28 AM, tamanaha

FED. ROAD DIST. NO.	STATE	FED. AID PROJ. NO.	FISCAL YEAR	SHEET NO.	TOTAL SHEETS
HAWAII	HAW.	NH-IM-0300(142)	2016	8	191

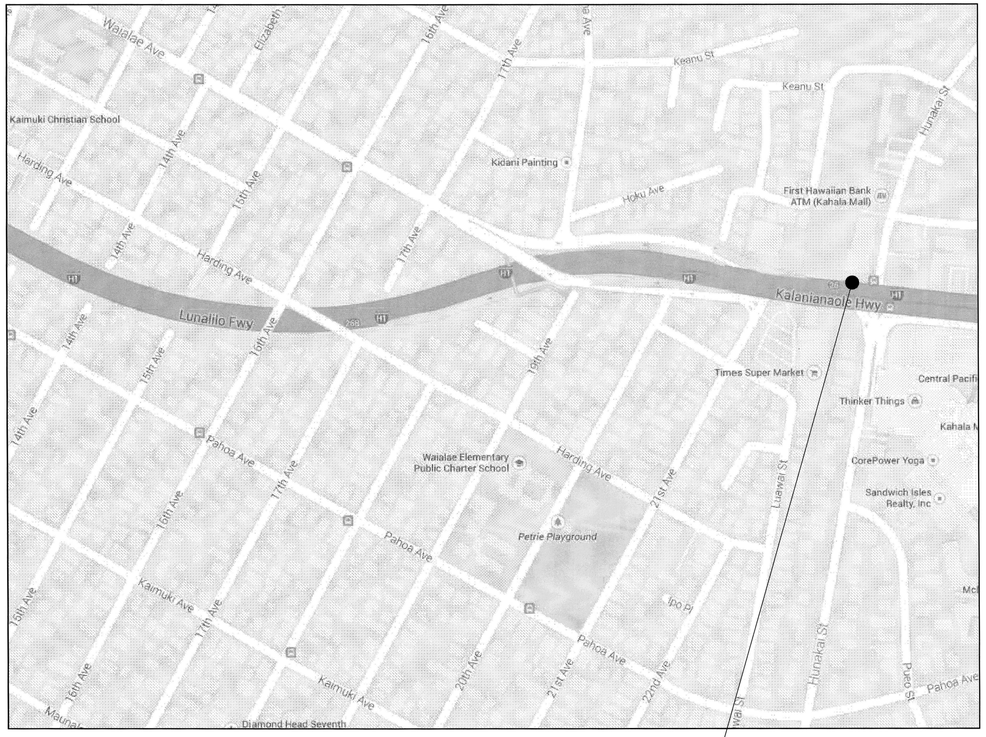

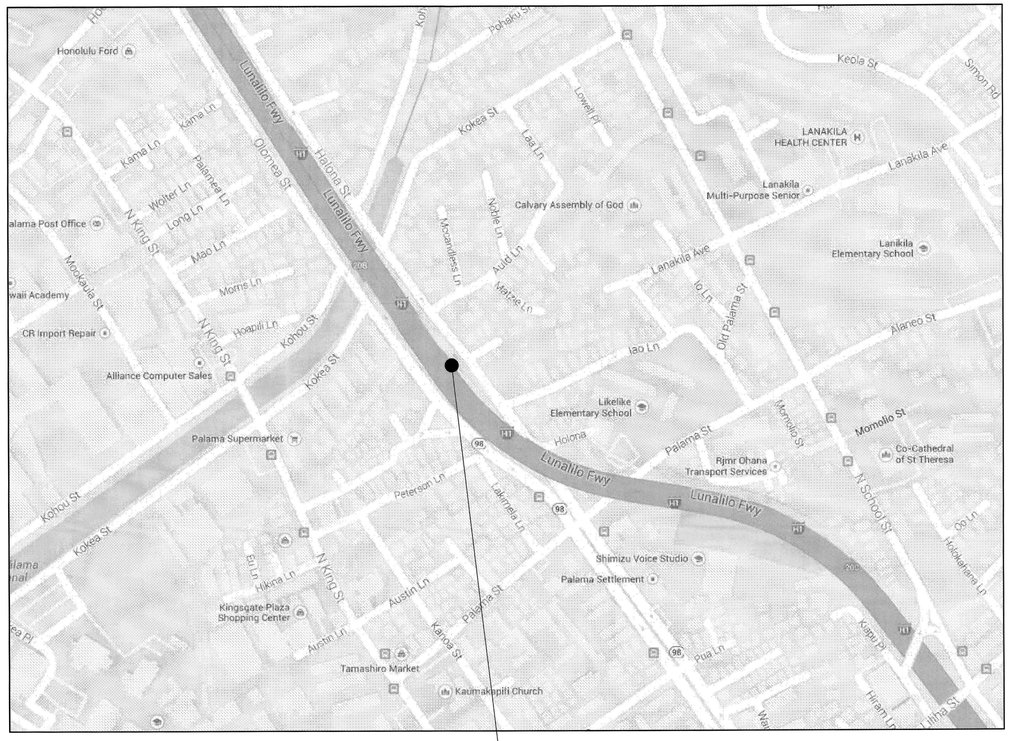

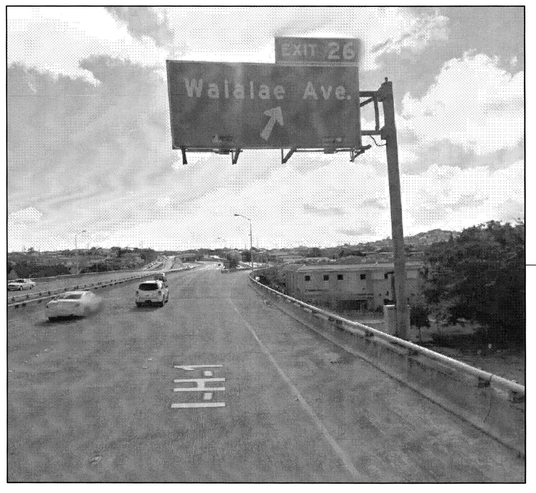

LOCATION MAP - H1WB-402, M.P. 26.64 (1 / S1.3 | S1.3)
NTS



LOCATION MAP - H1WB-418, M.P. 20.34 (2 / S1.3 | S1.3)
NTS

KEN KAZUO HAYASHIDA
LICENSED PROFESSIONAL ENGINEER
No. 6818-S
HAWAII, U.S.A.

EXPIRATION DATE OF THE LICENSE 4/30/2018
THIS WORK WAS PREPARED BY ME OR UNDER MY SUPERVISION

STATE OF HAWAII
DEPARTMENT OF TRANSPORTATION
HIGHWAYS DIVISION

LOCATION MAPS - 3

INTERSTATE ROUTE H-1, H-2 AND H201
DESTINATION SIGN UPGRADE / REPLACEMENT, PHASE 2
Federal Aid Project NO. - NH-IM-0300(142)

Scale: As Shown Date: May 2016

SHEET No. S1.3 OF 191 SHEETS

P:\Drafting\2016-07-21_2239 Dot H1 H2 Signs Phase 2\06_2239_S1-1_S1-6.dwg, 10/6/2016 7:32:29 AM, tamanaha

FED. ROAD DIST. NO.	STATE	FED. AID PROJ. NO.	FISCAL YEAR	SHEET NO.	TOTAL SHEETS
HAWAII	HAW.	NH-1M-0300(142)	2016	9	191

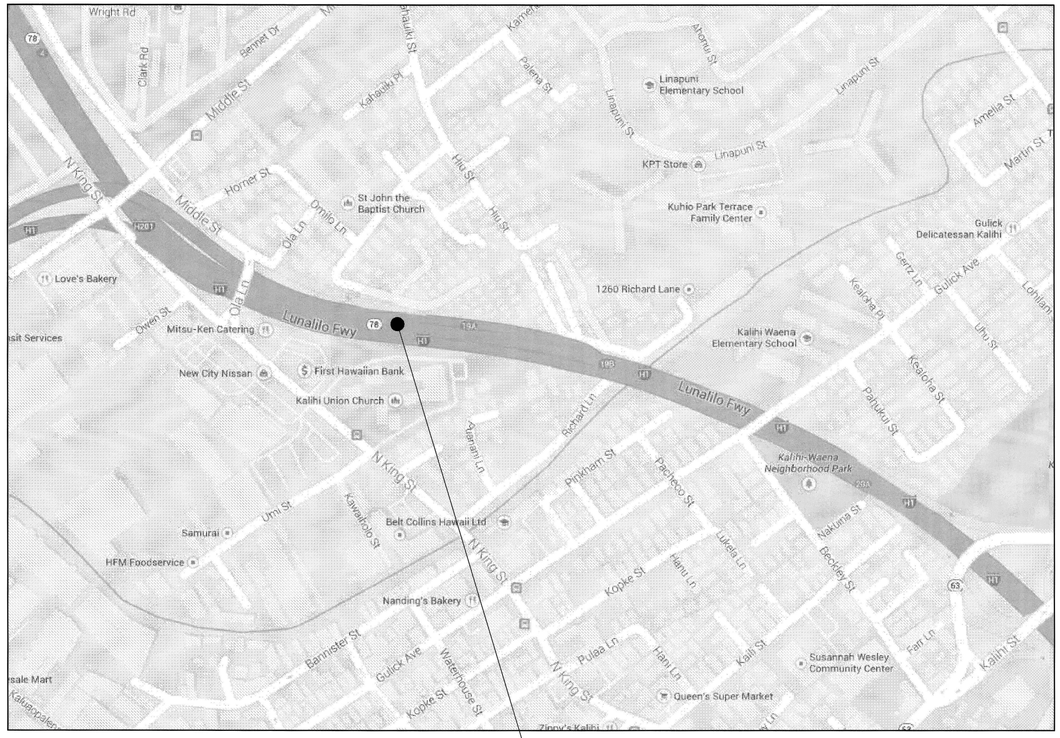

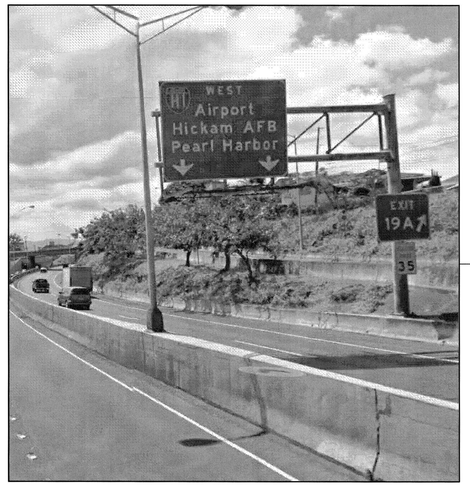

LOCATION MAP - H1WB-424, M.P. 19.08
NTS

1
S1.4 | S1.4

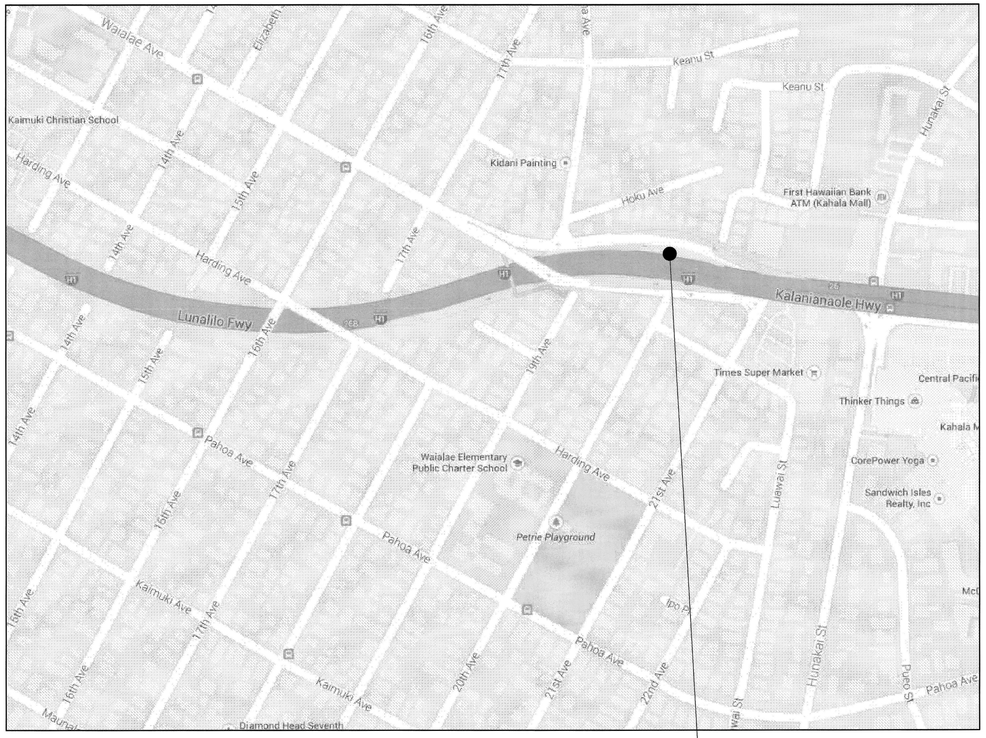

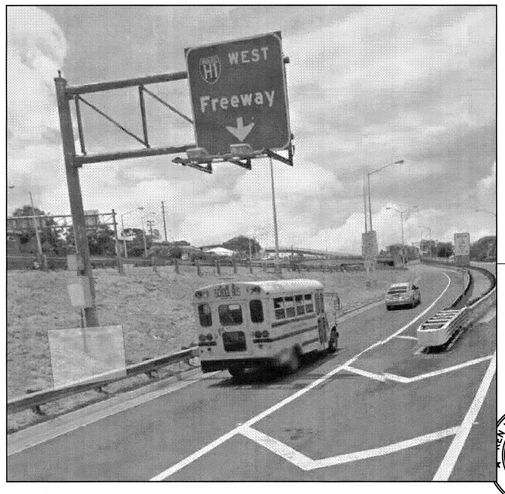

LOCATION MAP - H1WBR-451, M.P. RAMP
NTS

2
S1.4 | S1.4

KAZUO HAYASHIDA
LICENSED PROFESSIONAL ENGINEER
No. 6818-S
HAWAII, U.S.A.

EXPIRATION DATE OF THE LICENSE 4/30/2018
THIS WORK WAS PREPARED BY ME OR UNDER MY SUPERVISION

STATE OF HAWAII
DEPARTMENT OF TRANSPORTATION
HIGHWAYS DIVISION

LOCATION MAPS - 4

INTERSTATE ROUTE H-1, H-2 AND H201
DESTINATION SIGN UPGRADE / REPLACEMENT, PHASE 2
Federal Aid Project NO. - NH-IM-0300(142)

Scale: As Shown Date: May 2016

SHEET No. S1.4 OF 191 SHEETS

P:\Drafting\2016-07-21_2239 Dot H1 H2 Signs Phase 2\06_2239_S1-1_S1-6.dwg, 10/6/2016 7:32:29 AM, tamanaha

FED. ROAD DIST. NO.	STATE	FED. AID PROJ. NO.	FISCAL YEAR	SHEET NO.	TOTAL SHEETS
HAWAII	HAW.	NH-IM-0300(142)	2016	10	191



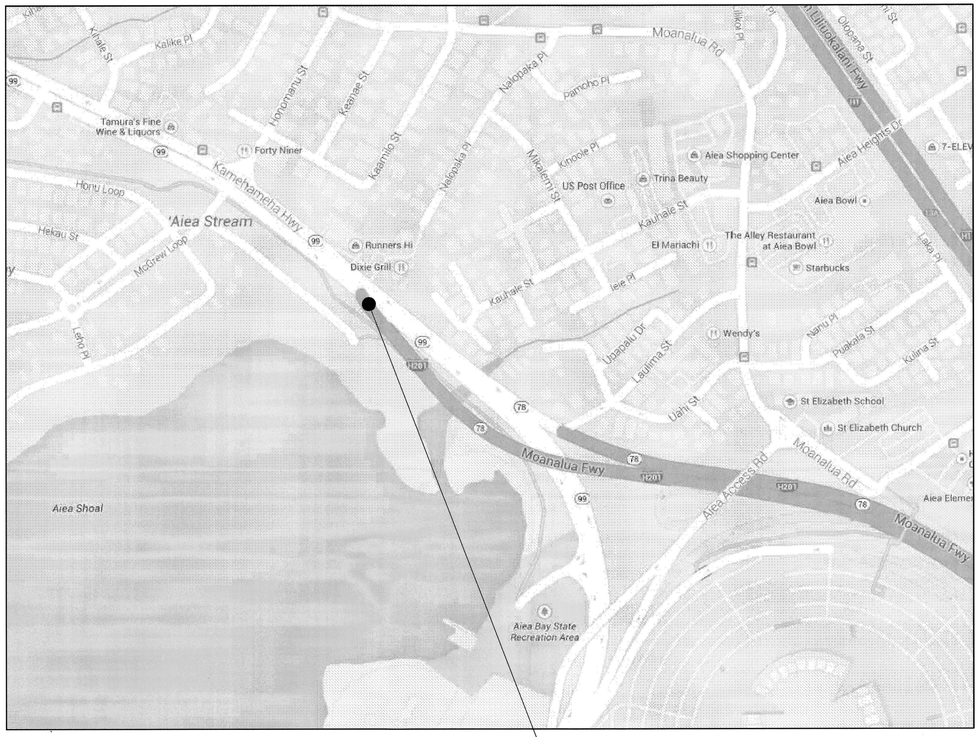



LOCATION MAP - H1WB-605, M.P. 5.1 (1)
NTS S1.5 | S1.5



LOCATION MAP - 78EBR-822, M.P. RAMP (2)
NTS S1.5 | S1.5

KEN KAZUO HAYASHIDA
LICENSED PROFESSIONAL ENGINEER
No. 6818-S
HAWAII, U.S.A.

EXPIRATION DATE OF THE LICENSE 4/30/2018
THIS WORK WAS PREPARED BY ME OR UNDER MY SUPERVISION

STATE OF HAWAII
DEPARTMENT OF TRANSPORTATION
HIGHWAYS DIVISION

LOCATION MAPS - 5

INTERSTATE ROUTE H-1, H-2 AND H201
DESTINATION SIGN UPGRADE / REPLACEMENT, PHASE 2
Federal Aid Project NO. - NH-IM-0300(142)
Scale: As Shown Date: May 2016
SHEET No. S1.5 OF 191 SHEETS

P:\Drafting\2016-07-21_2239 Dot H1 H2 Signs Phase 2\06_2239_S1-1_S1-6.dwg, 10/6/2016 7:32:30 AM, tamanaha

FED. ROAD DIST. NO.	STATE	FED. AID PROJ. NO.	FISCAL YEAR	SHEET NO.	TOTAL SHEETS
HAWAII	HAW.	NH-1M-0300(142)	2016	11	191

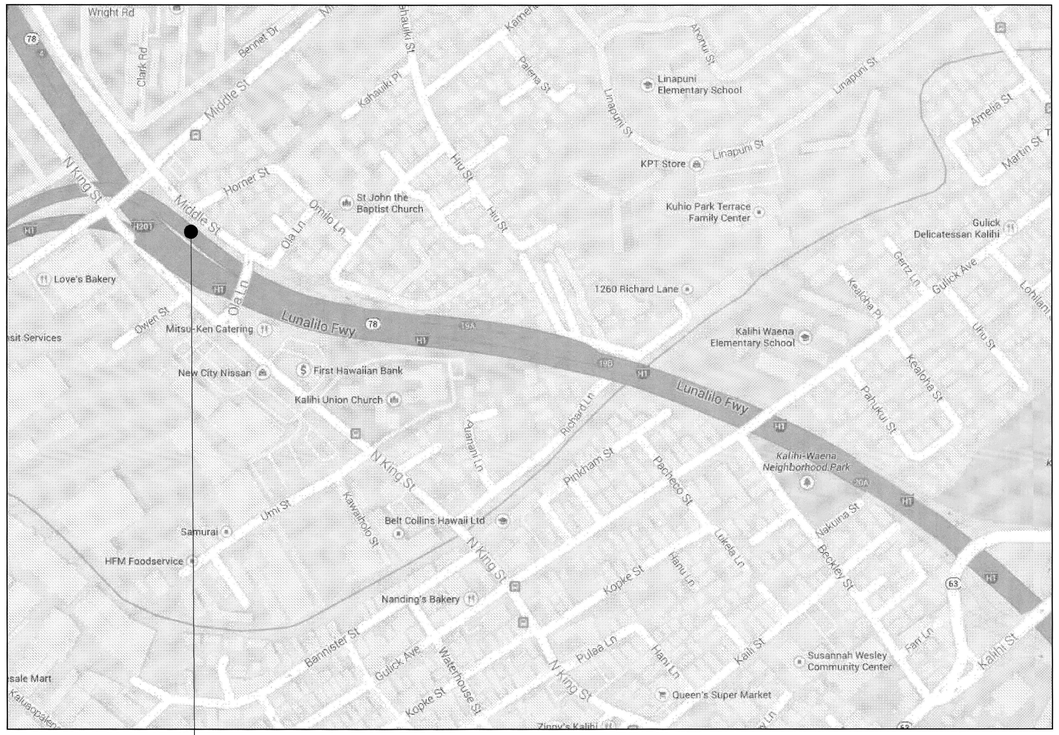

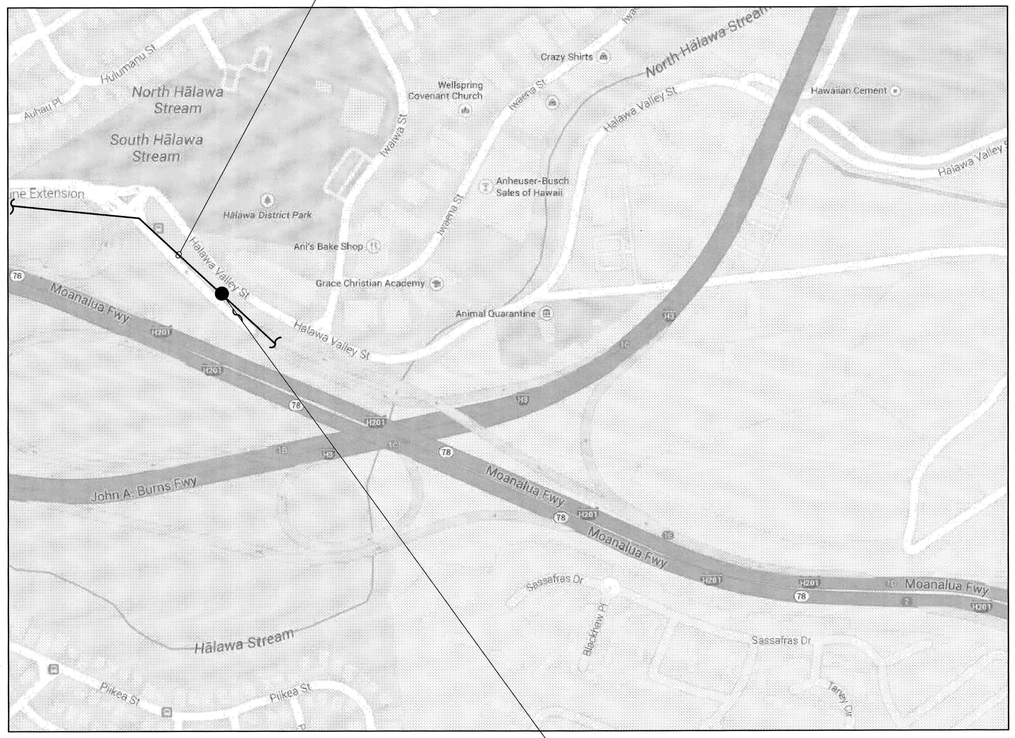

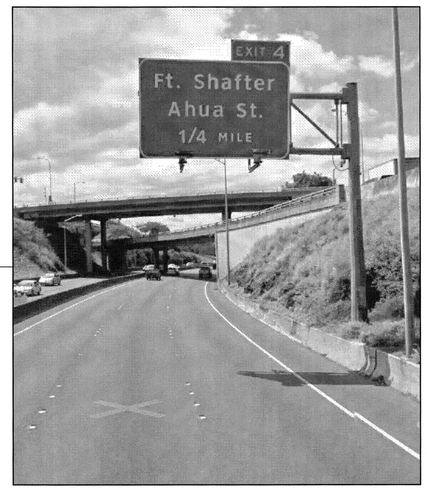

LOCATION MAP - 78WB-851, M.P. RAMP
NTS

1
S1.6 | S1.6

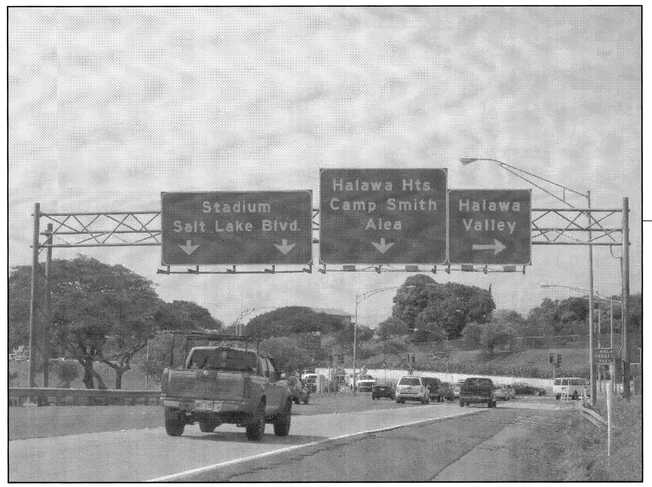

LOCATION MAP - 78WBR-871, M.P. RAMP
NTS

2
S1.6 | S1.6

Note:
1. The response to the consultation letter sent by Hawaii Gas during the design phase indicates potential conflict exists in the area of sign 78EBR-871. The contractor shall verify this during the construction.

KEN KAZUO HAYASHIDA
LICENSED PROFESSIONAL ENGINEER
No. 6818-S
HAWAII, U.S.A.

EXPIRATION DATE OF THE LICENSE 4/30/2018
THIS WORK WAS PREPARED BY ME OR UNDER MY SUPERVISION

STATE OF HAWAII
DEPARTMENT OF TRANSPORTATION
HIGHWAYS DIVISION

LOCATION MAPS - 6

INTERSTATE ROUTE H-1, H-2 AND H201
DESTINATION SIGN UPGRADE / REPLACEMENT, PHASE 2
Federal Aid Project NO. - NH-IM-0300(142)

Scale: As Shown Date: May 2016

SHEET No. S1.6 OF 191 SHEETS

P:\Drafting\2016-07-21_2239 Dot H1 H2 Signs Phase 2\06_2239_S1_1_S1_6.dwg, 10/6/2016 7:32:30 AM, tamanaha

FED. ROAD DIST. NO.	STATE	FED. AID PROJ. NO.	FISCAL YEAR	SHEET NO.	TOTAL SHEETS
HAWAII	HAW.	NH-IM-0300(142)	2016	12	191

General Notes:

1. The scope of work for this project consists of but not limited to removal of twelve (12) existing sign structures and concrete foundations and construction of twelve (12) new sign structures, including new drilled shafts/spread footings, new sign posts and frames, new destination sign panels, new guardrails at selected locations and remove/revise existing electrical lines.
2. The Contractor shall perform all applicable construction work in accordance with the "Department of Transportation, Highways Division, Standard Plans", as amended and "Hawaii Standard Specifications for Road and Bridge Construction, 2005", as amended for the State of Hawaii.
3. The Contractor shall verify/tone the location of all existing utilities before the construction work, whether shown on the plans or not, and shall be responsible for the repair or replacement of the same in the event of damages due to his/her construction practices, at no cost to the State.
4. All dimensions and details shown on the drawings shall be checked and verified prior to the start of construction, and any discrepancies shall be immediately brought to the attention of the Engineer for clarification.
5. The Contractor shall provide, install, and maintain all necessary signs, lights, flares, barricades, markers, cones and other protective facilities and shall take all necessary precautions for the protection and for the convenience and safety of public traffic. All such protective facilities and precautions to be taken shall conform with the "Administrative Rules of Hawaii Governing the Use of Traffic Control Devices at Work Sites on or Adjacent to Public Streets and Highways" adopted by the Director of Transportation, and the current U.S. Federal Highway Administration "Manual on Uniform Traffic Control Devices for Streets and Highway, Part VI Temporary Traffic Control". A traffic control plan is incorporated into the construction plans and must be approved by the Division prior to the issuance of the permit. In the event that the Contractor requires alternate lane closures, the Contractor is responsible for preparing traffic control plans and submitting said plans to HWY-T for approval before beginning work at that location.
6. Unless relocation is called for on the plans, existing utilities shall remain in-service and in place. If relocation of existing utilities is required for the Contractor's convenience, interruption of service shall be kept to a minimum and shall be done at the Contractor's expense and only with the approval of the Engineer, and shall be coordinated with the utility agency.
7. The Contractor's attention is directed to the following Sections: Subsection 104.09 - Maintenance of Traffic; Subsection 104.11 - Utilities and Services; Subsection 107.06 - Contractor Duty Regarding Public Convenience; and Section 645 - Work Zone Traffic Control.
8. The Contractor is reminded of the requirements of Subsection 105.16 - Subcontracts, which requires him to perform work not less than 30 percent of the total contract cost less deductible items. Non-compliance with the Subsection may be grounds for rejection of bid.
9. At the end of each day's work, the Contractor shall remove all equipment and other obstructions to permit free and safe passage of public traffic.
10. The existence and location of underground utilities, manholes, monuments and structures as shown on the plans are from the latest available data, but the accuracy is not guaranteed. The encountering of other obstacles during the course of work is possible. The Contractor shall tone for the exact locations and depths of all underground facilities, either shown on or omitted from the plans, in areas where work, such as placement of sign posts, traffic signal conduits, etc. may affect these properties. Toning shall be considered incidental to the various contract items and will not be paid for separately. The Contractor shall be held liable for any damages incurred to the existing facilities and/or improvements as a result of his operations.
11. The Contractor shall notify the Engineer in writing two (2) weeks prior to starting construction operations.
12. The Contractor shall indemnify and be solely responsible for the protection of adjacent properties, utilities and existing structures from damages due to construction. Repairing any damage shall be at the Contractor's own expense and to the satisfaction of the Engineer.
13. Pursuant to Section 6E, HRS, in the event any artifacts or human remains are uncovered during the construction operations, the Contractor shall immediately suspend work and notify the Honolulu Police Department, The State Department of Land and Natural Resources-Historic Preservation Branch (692-8015).
14. Smooth riding connections shall be constructed at all limits of project, including the beginning and end of project, connecting approaches and roadways as shown on the plans and/or as directed by the Engineer. This work shall be considered incidental to respective contract items and will not be paid for separately.
15. The Contractor shall clean and remove any accumulation of debris and aggregates along the roadside within 10 feet of the edge of pavement. This work shall be considered incidental to bulk of work or the various contract items and will not be paid for separately.
16. Removal and disposal of existing asphalt concrete pavement, sign structures/footings, guardrail parapets and any debris shall be considered incidental to their respective bid items.
17. All saw cutting work shall be considered incidental to demolition of existing sign structures/footings or various contract items or their respective bid items.
18. Prior to placement of new aggregate subbase course, the existing subbase shall be compacted to a relative compaction greater than or equal to 95%.
19. The top of the Hot Mix Asphalt Concrete Base Course prior to placement of the new A.C. pavement, Mix No. IV shall comply with the ten-foot straight edge requirement. The variation of the surface from a straight edge with two contacts with the surface shall not exceed 3/16".
20. No blasting shall be permitted on this project.
21. Contractor shall be responsible for providing adequate temporary shoring and bracing of the existing structures at all times during demolition and erection. Phasing of work is permitted to prevent section failure during excavation. Contractor shall take all precautions to avoid damage to existing structures.
22. After the project is completed, the Contractor shall restore grades and ground cover in the project limits to a condition equal or better than existing before such damage or injury was done.
23. The Contractor shall remove and dispose of all existing raised pavement markers, thermoplastic line markings, traffic tape, and epoxy adhesives prior to the overlaying of Asphalt Concrete. This work shall be considered incidental to Asphalt Concrete Pavement, Mix No. IV and will not be paid for separately.
24. No material and/or equipment shall be stockpiled or otherwise stored within the Highway Right-of-Way except at locations designated in writing and approved by the Engineer. If use of location is approved by the Engineer, the Contractor shall obtain a permit to use the property within the Highway Right-of-Way from the Oahu District Office.
25. Except during actual working hours, all signs which do not pertain to the construction activity, such as "MEN WORKING" and "FLAGMEN AHEAD" shall be covered or laid down. However, all signs necessary for the safety of the public shall be maintained.
26. The Contractor shall employ a Hawaii Registered Professional Surveyor to perform all construction stakeouts, the cost of which shall be borne by the Contractor.
27. The Contractor shall make his own arrangements for, and pay for all temporary utilities required for his work.
28. The Contractor shall procure and pay for all licenses and permits and shall give all notices necessary and incidental to the due and lawful prosecution of the work.
29. The Contractor shall remove and dispose all silt and debris deposited in drainage facilities, roadways and other areas resulting from his work. The cost incurred for any necessary remedial action ordered by the Engineer shall be paid for by the Contractor.
30. Trimming and dressing of shoulder and embankments shall consist of grading, reshaping and compacting the unpaved shoulders with suitable material as shown on the plans and/or as directed by the Engineer. Suitable materials shall include top soil. All disturbed soil areas shall be mulched by the Contractor. This work shall be considered incidental to various contract items.
31. The Contractor shall prepare and submit a site specific BMP plan for each location for review and approval.
32. This project may need to be coordinated with FAP NO. IM-HI-I (242), H1 Guardrail and Shoulder Improvement Middle Street to Punchbowl Off-Ramp.
33. For benchmarks see sheets S4.4 thru S4.12. Elevations shown on these plans are referenced to Mean Sea Level (MSL). Azimuths shown are based on Hawaii State plane coordinate grid system. North American DATUM (NAD) 83 HARN (DACOO), Zone 3.
34. Pavement markings, traffic control regulatory, warning, and miscellaneous signs shall be restored to original condition. All restoration shall comply the Standard Plan TE-26 to TE-28, TE-04 to TE-06.
35. All sign structures included in this project are coated with a paint system that contains lead. The Contractor shall follow Section 621 - Lead Based Paint for the dismantling, hauling and disposal of the structural steel members.

Public Health, Safety and Convenience Notes:

1. The Contractor shall observe and comply with all Federal, State and local laws required for the protection of public health and safety and environmental quality.
2. The Contractor, at his own expense, shall keep the project and it's surrounding areas free from dust nuisance. The work shall be in conformance with the Air Pollution Standards of the State Department of Health. The State may require supplementary measures as necessary.
3. The Contractor shall submit a Noise Pollution Control Plan when applying for a construction permit.

Noise Variance Notes:

The Noise Variance has been GRANTED with the following restrictions and conditions:

1. The variance shall be granted to remove and replace the overhead sign structures along Route 78 and the H-1 Freeway, Honolulu, Oahu.
2. The variance shall be granted from August 1, 2016 until July 31, 2017.
3. The variance shall be granted for the following days/times:

Monday	8:00 p.m. to midnight
Tuesday through Thursday	8:00 p.m. to midnight midnight to 4:00 a.m.
Friday	midnight to 4:00 a.m.

KEN KAZUO HAYASHIDA
LICENSED PROFESSIONAL ENGINEER
No. 6818-S
HAWAII, U.S.A.

EXPIRATION DATE OF THE LICENSE 4/30/2018
THIS WORK WAS PREPARED BY ME OR UNDER MY SUPERVISION

STATE OF HAWAII
DEPARTMENT OF TRANSPORTATION
HIGHWAYS DIVISION

CONSTRUCTION NOTES - 1

INTERSTATE ROUTE H-1, H-2 AND H201
DESTINATION SIGN UPGRADE / REPLACEMENT, PHASE 2
Federal Aid Project NO. - NH-IM-0300(142)

Scale: As Shown Date: May 2016

SHEET No. S2.1 OF 191 SHEETS

P:\Drafting\2016-07-21_2239 Dot H1 H2 Signs Phase 2\07_2239_S2-1_S2-3.dwg, 10/6/2016 7:32:33 AM, tamanaha

FED. ROAD DIST. NO.	STATE	FED. AID PROJ. NO.	FISCAL YEAR	SHEET NO.	TOTAL SHEETS
HAWAII	HAW.	NH-IM-0300(142)	2016	13	191

Noise Variance Notes (CONT.):

4. The variance shall be granted with the following restrictions:
   a. The use of the hoe ram shall be prohibited unless the Contractor uses a manufacturer approved sound proof device for the hydraulic hammer or encloses the site with a noise tent/barriers such as air filled fabric barriers, acoustical barrier enclosures, or a noise barrier which shall be installed to reduce the noise level.
   b. The use of the jackhammer shall be prohibited after midnight.
5. The applicant.shall notify the Indoor and Radiological Health Branch as to the date and time of any variance hour activity as soon as the dates are confirmed and also when the project is completed.
6. Residents and businesses shall be given sufficient notice regarding the project. The notification for the planned nighttime activity shall also contain the name and telephone number of the job -site inspector. In addition, a copy of any notifications, as well as progress reports, shall also be sent to the Indoor and Radiological Health Branch.
7. The applicant shall make every effort to minimize noise emanating from the project.
8. The use of reverse signal alarms shall be prohibited from 8:00 p.m. to 7:00 a.m. Alternative methods such as utilizing a ground guide for signaling shall be employed.
9. Traffic noise from heavy vehicles travelling to and from the project site shall be minimized near residences.
10. The applicant shall have a job-site inspector to whom immediate complaints can be forwarded for prompt response, and who shall have the general responsibility of monitoring quiet work procedures.
11. If the noise level is such that numerous complaints are received by the Department, the applicant shall cease operations upon receipt of an order and complete the project during hours on weekdays and weekends as directed.
12. Pursuant to Section 342F-5(d)(3), H.R.S., the applicant shall be required to perform noise sampling during the variance hours and report the results of such sampling to the Indoor and Radiological Health Branch.
13. The contractor shall also take noise sampling Monday - Friday during the normal day work.
14. Should the duration of the project continue beyond the expiration date, the applicant shall submit a request for extension along with an updated work schedule prior to July 31, 2017.

Grading Notes:

1. All grading and stockpiling work shall be in accordance with State of Hawaii 2005 Standard Specifications for Road and Bridge Construction.
2. No contractor shall perform any grading operation so as to cause falling rocks, soil or debris in any form to fall, slide or flow onto adjoining properties, streets or natural waretcourses. Should such violations occur, the Contractor may be cited and the Contractor shall immediately make all remedial actions necessary.
3. The Contractor, at the Contractor's own expense, shall keep the project area and surrounding area free from dust nuisance. The work shall be in conformance with the air pollution control standards contained in the Hawaii Administrative Rules, Title 11, Chapter 60.1, "Air Pollution Control".
4. The underground pipes, cables or ductlines known to exist by the Design Engineer from his/her search of records are indicated on the plans. The Contractor shall verify the locations and depths of the facilities and exercise proper care in excavating ih the area. Wherever connections of new utilities are shown on the plans, the Contractor shall expose the existing lines at the proposed connections to verify their locations and depths prior to excavation for the new lines.
5. Surface waters shall not damage the cut face of an excavation or the sloped surfaces of a fill. Furthermore, sediment-laden runoff shall not leave the site.
6. All slopes and exposed areas shall be sodded, planted or hydro-mulched, as soon as final grades have been established. Planting shall not be delayed until all grading has been completed. Grading to final grade shall be continuous, and any area within which work has been interrupted or delayed shall be planted. Plant species shall be submitted to Engineer for approval prior to ordering, purchasing and installation. Planting shall be installed according to HDOT Standard Specifications.
7. Fills on slopes steeper than 5:1 shall be keyed.
8. No grading work shall be done on Saturdays, Sundays and holidays at any time without prior notice and acceptance by the Engineer, provided such grading work is also in conformance with the community noise control standards contained in the Hawaii Administrative Rules, Title 11, Chapter 46, "Community Noise Control".
9. The limits of the area to be graded shall be flagged before the commencement of the grading work.
10. All grading operations shall be performed in conformance with the applicable provisions of the water quality and water pollution control standards contained in Hawaii Administrative Rules, Title 11, Chapter 54, "Water Quality Standards", and Title 11, Chapter 55, "Water Pollution Control" and if applicable, the NPDES permit for the project.
11. The measures to control erosion and other pollutants shall be in place before any earth-moving phase of the grading is initiated.
12. Temporary erosion controls shall not be removed before permanent erosion controls are in-place and established.
13. Temporary erosion control procedures shall be submitted for approval prior to application for permit.
14. If the grading work involves contaminated soil, then all grading work shall be done in conformance with applicable State and Federal requirements.
15. The Contractor shall obtain a grading permit from City and County of Honolulu, Department of Planning and Permitting at least two (2) weeks prior to construction.

State Historic Preservation Division Requirements Notes:

1. Should Historic Sites such as walls, platforms, pavements, and mounds, or remains such as artifacts, burials, concentration of charcoal or shells be encountered during construction work, work shall cease in the immediate vicinity of the find and the find shall be protected from further damage. The Contractor shall immediately contact the State Historic Preservation Division at 692-8015, a qualified archaeologist will assess the significance of the find and recommend an appropriate mitigation measure.
2. If human remains are discovered, Hawaii Administrative Rules Title 13, Subtitle 13, Chapter 300 states that further disturbances and activities shall cease in any area or nearby area suspected to overlie remains, and SHPD and the Police Department will be contacted. The appropriate process would then proceed in conformance with Hawaii Administrative Rules Chapter 13-300 Subchapter 4, concerning treatment of inadvertently discovered human skeletal remains.
3. The HDOT will prevent the disturbance or taking of any historic property or resource to the extent possible by instituting these mitigation measures and enforcing their implementation by contractors.

U.S. Fish and Wildlife Service Requirements Notes:

1. The Contractor shall pay attention to the nighttime lighting during each year's peak fallout period (September 15 to December 15), could result in seabird injury and mortality. The lights should be positioned low to the ground, be motion-triggered, and be shielded and/or full cut-off. Effective light shields should be completely opaque, sufficiently large and positioned so that the bulb is only visible from below. Lights should be shielded and direction to work ground if night time occurs even during other time of year.
2. To avoid impacts to the Hawaiian Hoary bat, trees and shrubs taller than 15 feet shall not be trimmed or cleared.
3. No utilities will be moved or realigned.

Traffic Notes for Traffic Control Plan:

1. All lane closures shall occur at night. Allowable lane closure times are shown in Section 645 - Work Zone Traffic Control of the Special Provisions. No daytime lane closures are allowed at any sign location.
2. The Contractor shall make minor adjustments at intersections, driveways, bridges, structures, etc, to fit field conditions.
3. Cones or delineators shall be extended to a point where they are visible to approaching traffic.
4. Traffic control devices shall be installed such that the sign or device farthest from the work area is placed first. The others shall then be placed progressively toward the work area.
5. Regulatory and warning signs within the construction zone that are in conflict with the traffic control plans shall be removed or covered.
6. Flagger and/or police officers shall be in sight of each other or in direct communications at all times.
7. The Contractor shall install a flashing arrow signal as shown on the traffic control plans.
8. All traffic lanes shall be minimum of 11 feet wide unless noted otherwise.
9. All construction warning signs shall be promptly removed or covered whenever the message is not applicable or not in use.
10. The backs of all signs used for traffic control shall be appropriately covered to preclude the display of inapplicable sign message (i.e., when signs have messages on both faces).
11. Lane closure shall be limited only to the extent of accomplishing each day's work. As soon as each day's work is completed, the permittee shall remove all traffic control devices no longer needed to permit free and safe passage of public traffic. Removal shall be in the reverse order of installation. Existing faded or obliterated pavement markings that are necessary for safe traffic flow in the construction area shall be replaced with temporary or permanent markings before opening the roadway to public traffic each day.
12. Permanent pavement markings and traffic signs shall be placed upon completion of each phase of work.
13. Buffer and taper areas on approach to any work shall be kept clear of vehicles and equipment.
14. A high level warning device (Flag Tree) shall be installed on approach to all work areas.
15. All work zone traffic control devices shall comply with the "State Wide Guideline for Work Zone Traffic Control Devices", Dated September 13, 2000.
16. The Contractor shall limit the removal/erection of sign frame between the hours of 10:00 PM and 4:00 AM. Traffic control plans for lane closure during the removal/erection are provided.

Signs and Markings Notes:

1. All traffic sign and pavement marking installations shall be done in accordance with the "Manual on Uniform Traffic Control Devices for Streets and Highways," 2009 Edition, as amended, and "Hawaii Standard Specifications for Road and Bridge Construction, 2005", as amended for the State of Hawaii.

KEN KAZUO HAYASHIDA
LICENSED PROFESSIONAL ENGINEER
No. 6818-S
HAWAII, U.S.A.

EXPIRATION DATE OF THE LICENSE 4/30/2018
THIS WORK WAS PREPARED BY ME OR UNDER MY SUPERVISION

STATE OF HAWAII
DEPARTMENT OF TRANSPORTATION
HIGHWAYS DIVISION

CONSTRUCTION NOTES - 2

INTERSTATE ROUTE H-1, H-2 AND H201
DESTINATION SIGN UPGRADE / REPLACEMENT, PHASE 2
Federal Aid Project NO. - NH-IM-0300(142)

Scale: As Shown Date: May 2016

SHEET No. S2.2 OF 191 SHEETS

P:\Drafting\2016-07-21_2239 Dot H1 H2 Signs Phase 2\07_2239_S2-1_S2-3.dwg, 10/6/2016 7:32:34 AM, tamanaha

FED. ROAD DIST. NO.	STATE	FED. AID PROJ. NO.	FISCAL YEAR	SHEET NO.	TOTAL SHEETS
HAWAII	HAW.	NH-1M-0300(142)	2016	14	191

Signs and Markings Notes (CONT):

2. Contractor shall paint temporary guidelines and outline of arrows, legends, and crosswalks with a Two inch (2") wide brushed line and reflective pavement markers on the day the roadway is opened to traffic.
3. Within Ten (10) days following notification of award of contract, the Contractor shall submit a list of any signing and pavement marking material which he proposes to install. The list shall be complete as to the name of manufacturer, catalog number, and shall be supplemented with material brochures.
4. Signs shall be attached to brackets with 5/16" zinc plated steel bolts, nuts and washers. Signs 48" wide or larger than 10 sq. ft. in area shall be mounted on two (2) galvanized pipe posts. The sign shall be installed with at least (1) one foot clearance from the sign edge to the curb face.
5. Raised pavement markers, pavement work and symbol markings shall be installed in accordance with the HDOT Standards.
6. The Contractor shall use thermoplastic material for all center lines, lane lines, and legends.

Notes for Construction within State Right-of-Way:

1. The Contractor shall obtain a Permit to Perform Work upon State Highways from the Oahu District Engineer, State Highways, at 727 Kakoi Street, prior to commencement of work within the State's highway right-of-way.
2. Construction and restoration of all existing highway facilities within the State's right- of-way, including the legal relations and responsibility to the public, shall be in accordance with the current Hawaii Standard Specifications for Road and Bridge Construction, and the Specifications for Installation of Miscellaneous Improvements within State Highways, of the State Highways Division.
3. At certain locations, "NO LANE CLOSURE" will be allowed during the "Back To School Jam", Thanksgiving weekend, Christmas / New Year Period and at other times as directed by the Highways Division.
4. The Contractor shall provide, install, and maintain all necessary signs, lights, flares, barricades, markers, cones, and other protective facilities, and shall take all necessary precautions for the protection, convenience, and safety of public traffic. All such protective facilities and precautions to be taken shall conform with the "Administrative Rules of Hawaii Governing the Use of Traffic Control Devices at Work Sites on or Adjacent to Public Streets and Highways", adopted by the Director of Transportation, and the "U.S. Federal Highway Administration MUTCD - Manual on Uniform Traffic Control Devices, Part VI – Temporary Traffic Control".
5. No material and/or equipment shall be stockpiled or otherwise stored within the highway right-of-way, except at locations designated in writing and approved by the District Engineer.
6. The Contractor shall take a profile along the centerline of the proposed utility trench both before commencing trench excavation work and after trench has been repaved. Profiles shall be submitted to the District Engineer and shall be used to verify the roadway surface has been restored to its original condition or smoother.
7. The Contractor shall make every effort to minimize the use and the duration of use of bridging materials. The State may require the backfilling and patches of trenches due to the excessive usage of steel plates.
8. Unless otherwise noted, no trench shall be opened more than 300 feet in advance of installed and tested pipeline and/or ductline.
9. Existing drainage systems shall be functional at all times.
10. The Contractor shall exercise care to minimize damages to existing highway improvements. All damages shall be repaired by the Contractor, at his expense, to the satisfaction of the District Engineer.
11. Approval of permit construction plans shall be valid for a period of one (1) year from the date of notification of approval to the applicant. In the event construction does not commence within this one-year period, the applicant will be required to resubmit the construction plans for the Division's review and re-approval.
12. All regulatory, guide, and construction signs and barricades shall have a high-intensity Type III or IV retroreflective background.
13. The Contractor shall inform the State Highway's Permit Office (831-6712) at least two (2) days prior to closing any lanes.
14. The Contractor shall reference, to the satisfaction of the District Engineer, all existing traffic signs, posts, and pavement markings prior to the commencement of construction. The Contractor shall replace or repair all traffic signs, posts, and pavement markings disturbed by his activities, at his expense, unless directed by the District Engineer or his representative.
15. The Contractor shall exercise care when performing work in or adjacent to the State highway right-of-way. Damages to the existing facilities shall be immediately reported to the respective utility companies, and/or City or State agencies. The repair work shall be done at the Contractor's expense.
16. Highway lights shall be kept operational during construction. Should work be necessary, the contractor shall notify the State Highways' Highway Lighting Supervisor (837-8056), three (3) working days prior to commencing work.
17. The Contractor shall notify the City Department of Transportation Services, Traffic Signal Engineer (768-8388), three (3) days prior to any signalized intersection work.
18. Traffic signals shall be kept operational during construction. Temporary operational microwave or other approved detection devices shall be installed three (3) working days prior to any signalized intersection excavation work. All work shall be done in accordance to the requirements of the Department of Transportation Services, City and County of Honolulu, and paid for by the Contractor.
19. The Contractor shall notify the Department of Transportation Services, Public Transit Division at 768-8396 and Oahu Transit Services, Inc. (bus operations: 848-4578 or 852-6016 and para-transit operations: 454-5041 or 454-5020) two weeks prior to commencing any work. The Contractor shall inform of the location and scope of work, proposed closure of any street or traffic lanes, and the need to relocate any bus stop.
20. The Permit to Perform Work upon State Highway may be revoked because of default in any of the following, but not limited to, conditions:
    a. Work performed before or after permitted hours.
    b. Failure to maintain roadway surfaces in a smooth and safe condition.
    c. Failure to clean up construction debris generated from project work.
    d. Failure to provide proper traffic control.
    e. Failure to replace damaged pavement markings and signs.
    f. Failure to maintain highway lights and/or traffic signal systems.
    g. Failure to address public complaints to the satisfaction of the District Engineer.
21. The Contractor shall notify the State Highways permit Office (831-6712) at least two days prior to performing any trench restoration work. This work shall include any backfilling and compacting of trench material; any placing and compacting of base course material; and any paving operations. Any trench restoration work performed by the Contractor that is not witnessed by a State Representative will be required to be removed and restored with a State Representative present. All restoration work will be at the Contractor's expense.
22. Plastic Marking Tape. Provide plastic marking tape that is acid and alkali resistant polyethylene film 6 inches wide with minimum thickness of 0.004 inch. Provide tape with minimum strength of 1750 psi lengthwise and 1500 psi crosswise. Manufacture tape with integral wires, foil backing or other means to enable detection by a metal detector when the tape is buried up to 3 feet deep. Manufacture tape specifically for marking and locating underground utilities. Provide the metallic core of the tape encased in a protective jacket or provided with other means to protect it from corrosion. Conform to the following tape color and bear a continuous printed inscription describing the specific utility.

Red:	Electric
Yellow:	Gas, Oil, Dangerous Materials
Orange:	Telephone, Telegraph, Television, Police, and Fire Communications
Blue:	Water Systems
Green:	Sewer Systems

30. The Contractor shall provide the District Engineer with as-built plans upon completion of the work done in the State Right-of-Way. This shall be done prior to the department's release of the performance bond.

Stockpiling Notes:

1. All stockpiling work shall be done in accordance with Chapter 14, Article 13, 14, 15 and 16, as related to stockpiling, erosion and sediment control of the revised Ordinances of Honolulu, 1990, As Amended.
2. Contractor shall not perform any stockpiling operation so as to cause falling rocks, soil or debris in any form to fall, slide or flow into adjoining properties, streets or natural watercourses. Should such violations occur, the Contractor shall immediately make all remedial actions necessary.
3. The limits of the area to be stockpiled shall be flagged before the commencement of the stockpiling work.
4. All stockpiling operations shall be performed in conformance with the applicable provisions of the Water Quality and Water Pollution Control Standards contained in the Hawaii Administrative Rules, Title 11, Chapter 54, "Water Quality Standards" and Title 11, Chapter 55, "Water Pollution Control" and if applicable, the NPDES Permit for the project.
5. Temporary erosion control procedures shall be submitted for approval prior to application for stockpiling permit.
6. If the stockpiling work involves contaminated soil and/or hazardous materials, then all stockpiling work shall be done in conformance with applicable state and federal requirements. Contact the Solid and Hazardous Waste Branch of the State Department of Health for more information (phone number: 586-4226).
7. Adequate provisions shall be made to prevent surface waters from damaging the cut face of an excavation or the sloped surfaces of a fill. Furthermore, adequate provisions shall be made to prevent sediment-laden runoff from leaving the site.
8. Where applicable and feasible the measures to control erosion and other pollutants shall be in place before any stockpiling work is initiated. Temporary erosion controls shall not be removed before permanent erosion controls are in-place and established.
9. Non-compliance to any of the above requirements shall mean immediate suspension of all work and remedial work should commence immediately. All costs incurred shall be billed to the permitee. Furthermore, violators shall be subjected to administrative, civil and/or criminal penalties.

KEN KAZUO HAYASHIDA
LICENSED PROFESSIONAL ENGINEER
No. 6818-S
HAWAII, U.S.A.

EXPIRATION DATE OF THE LICENSE 4/30/2018
THIS WORK WAS PREPARED BY ME OR UNDER MY SUPERVISION

STATE OF HAWAII
DEPARTMENT OF TRANSPORTATION
HIGHWAYS DIVISION

CONSTRUCTION NOTES - 3

INTERSTATE ROUTE H-1, H-2 AND H201
DESTINATION SIGN UPGRADE / REPLACEMENT, PHASE 2
Federal Aid Project NO. - NH-1M-0300(142)
Scale: As Shown Date: May 2016

SHEET No. S2.3 OF 191 SHEETS

P:\Drafting\2016-07-21_2239 Dot H1 H2 Signs Phase 2\07_2239_S2-1_S2-3.dwg, 10/6/2016 7:32:35 AM, tamanaha

FED. ROAD DIST. NO.	STATE	FED. AID PROJ. NO.	FISCAL YEAR	SHEET NO.	TOTAL SHEETS
HAWAII	HAW.	NH-IM-0300(142)	2016	15	191

Utility Notes:

HECO Notes:

1. The Contractor shall verify in the field the locations of the facilities and shall exercise proper care in working in the area. The Contractor shall be responsible for any damages to HECO's facilities whether shown or not shown on the plans.
2. State law requires that a worker and the longest object he or she may contact cannot come closer than a minimum radial clearance of 10 feet when working close to or under any overhead lines rated 50kv and below. For each additional 1kv above 50kv, an additional 0.4 inch shall be added to the 10-foot clearance requirement. The proceeding information on line clearance requirements is provided as a convenience and it is the contractor's responsibility to be informed of and comply with any revisions or amendments to the law.
3. Should the Contractor anticipate that his work will result in the need to encroach within the minimum required clearance at any time, the Contractor shall notify HECO at least four (4) weeks prior to the planned encroachment so that, if feasible, the necessary protections (e.g. Relocate, de-energize, or blanket HECO lines) can be put in place. Contact HECO's customer installations department at 543-7846 for assistance in identifying and safeguarding overhead power lines.
4. Any work required to relocate or modify HECO facilities shall be done by HECO, or by the Contractor under HECO's supervision. The Contractor shall be responsible for all coordination, and shall provide necessary support for HECO's work, which may include, but not to be limited to, excavation and backfill, permits and traffic control, and restoration of pavement, sidewalks and other facilities.
5. The Contractor acknowledges that HECO is not responsible for any delay or damage that may arise as a result of any conflicts discovered or identified with respect to the location or construction of HECO's electrical facilities in the field, regardless of whether the Contractor has met the requested minimum advance notices. In order to minimize any delay or impact arising from such conflicts, the Contractor shall notify HECO immediately upon discovery or identification of such conflict.
6. The Contractor shall be responsible for the protection of all HECO surface and subsurface utilities and shall be responsible for any damages to HECO's facilities as a result of his operations. The Contractor shall immediately report such damages to HECO's trouble dispatch at 548-7961. Repair work shall be done by HECO or by the Contractor under HECO's supervision. Costs for damages to HECO's facilities shall be borne by the contractor.
7. See additional HECO notes on Electrical Sheets E1.2 and E1.3.

Construction Notes for Gas Facilities:

1. Hawaii Gas's gas pipelines in the project area are plastic coated and cathodically protected. The Contractor shall be extremely careful when working near these gas pipelines.
2. Written clearances must be obtained from Hawaii Gas's map and records department, 515 Kamakee Street, at least five (5) working days prior to starting excavation near these gas pipelines.
3. Since gas line locations on field maps are approximate, the Contractor, after obtaining written clearance, shall call Hawaii One Call Center a minimum of five (5) working days before starting excavation to arrange for field location of the existing gas pipelines. The telephone number is 811 or 1-866-423-7287.
4. The Contractor shall excavate and backfill around gas pipelines in the presence of a representative of Hawaii Gas. All backfill within six inches of any gas pipeline shall be select cushion material approved by Hawaii Gas.
5. For relocation of any gas pipeline, the Contractor shall notify Hawaii Gas five (5) working days before starting work. The telephone number is 594-5574. The Contractor shall provide the necessary excavation and backfill, obtain traffic permits and restore pavement, sidewalks and other facilities. Any relocation of gas facilities shall be done by Hawaii Gas and paid for by the Contractor.
6. The Contractor shall notify Hawaii Gas immediately after any damage has been caused to existing gas pipelines, coatings or it's cathodic protection devices. The telephone number is 535-5933, 24 hours a day. The Contractor shall be liable for any damage to Hawaii Gas's facilities. Repair work on such damage shall be done by Hawaii Gas with payments for this work to be borne by the Contractor.
7. Minimum vertical and horizontal clearance between the gas pipelines and other pipelines, conduits, ductlines, or other facilities shall be 12 inches. Adequate support and protection for gas pipelines exposed in the trench shall be provided by the Contractor and approved by Hawaii Gas.
8. The Contractor shall work in an expeditious manner in order to keep the uncovered gas pipelines exposed for as short a period of time as possible.
9. The response to the consultation letter sent by Hawaii Gas during the design phase indicates potential conflict exists in the area of sign 78EBR-871. The contractor shall verify this during the construction.

Hawaiian Telcom General Construction / Design Notes :

1. The Contractor shall procure and pay for all licenses and permits and shall give all notices necessary and incident to the due and lawful prosecution of the work.
2. The Contractor shall obtain an excavation permit and toning request from Hawaiian Telcom's Excavation Permit Section, located at 1177 Bishop Street, two weeks prior to the start of constrllction. Hours of business are 8:00 a.m. to 11:00 a.m. and 12:00 p.m. to 3:00 p.m. Monday through Friday, except holidays.
3. Prior to the excavation of the ductline, the contractor shall request Hawaiian Telcom to locate existing ductline wherever required. For underground cable locating and marking, five (5) working days advance notice is required. Three (3) working days advance notice is required for any inspection by a designated representative.
4. The locations of existing utilities are approximate only. The Contractor shall exercise extreme caution and shall maintain proper clearances whenever construction crosses or is in close proximity of Hawaiian Telcom facilities. The Contractor shall verify their locations and shall be liable for any damages to Hawaiian Telcom facilities. Any damages shall be reported immediately to Hawaiian Telcom's repair section at #611 (24 hours) or to the excavation permit section at 546-7746 (normal working hours, Monday through Friday, except holidays). As a result of his operations, adjustments to the new ductline alignment, if required, shall be made to provide the required clearances.
5. The Contractor shall take necessary precaution not to damage existing cables or ducts. A Hawaiian Telcom inspector or designated representative is required to be at any job site whenever there will be a breakage into or entry into any structure that contain Hawaiian Telcom facilities. Temporary cable and duct supports shall be provided wherever necessary.
6. The Contractor shall notify Hawaiian Telcom's inspector or designated representative a minimum of 72 hours prior to excavation, bracing, or backfilling of Hawaiian Telcom's structures or facilities.
7. All applicable construction work shall be done in accordance with the "Hawaiian Telcom Standard Specifications for Placing Telephone Systems" dated January 2007, all subsequent amendments and additions, and all other pertinent standards for telephone construction. Contractor shall familiarize his personnel by obtaining applicable specifications.
8. When excavation is adjacent to or beneath Hawaiian Telcom's existing structures or facilities, the contractor shall:
   a) Sheet and/or brace the excavation to prevent slides, cave-ins, or settlements to ensure no movement to Hawaiian Telcom's structures or facilities.
   b) Protect existing structures and/or facilities with beams, struts, or underpinning while excavating beneath them to ensure no movement to Hawaiian Telcom's structures or facilities.
9. The Contractor shall brace all poles or light standards near the new ductline, manhole, or handhole during his operations.
10. The Contractor shall saw-cut A.C. pavement and concrete gutter wherever new manholes, handholes, or ductlines are to be placed and shall restore to existing condition or better.
11. The Contractor shall comply with the policy adopted by the Department of Planning and Permitting, City and County of Honolulu, concerning the replacement of concrete sidewalks after excavation work.
12. The underground pipes, cables, or ductlines known to exist by the engineer from his search of records are indicated on the plans. The Contractor shall verify the locations and depths of the facilities and exercise proper care in excavating in the area. Wherever connections of new utilities to existing utilities are shown on the plans, the Contractor shall expose the existing lines at the proposed connections to verify their locations and depths prior to excavation for the new lines.
13. Wherever connections to existing utilities are shown on the plans, the contractor shall expose the existing lines prior to excavation of the main trenches to verify their locations and depths.
14. The Contractor, at his own expense, shall keep the project and surrounding area free from dust nuisance. The cost for supplementary measures, which will be required by the City and County, shall be borne by the Contractor.
15. The Contractor shall pump all manholes dry during final inspection.
16. The Contractor shall notify Hawaiian Telecom inspector 24 hours prior to the pouring of concrete or backfilling.
17. When connecting to manhole walls, all existing reinforcing bars shall be left intact. Ducts shall be adjusted in the field in order to clear reinforcing.
18. The Contractor shall be responsible for laying out all required lines and grades and shall preserve all bench marks and working points necessary to layout the work correctly. The new ductline shall be adjusted by the Contractor to suit the existing conditions and the details as described in the plans.
19. Minimum concrete strength shall be:
    For ductline 2500 psi at 28 days
    For manhole 3000 psi at 28 days or as specified in design notes
20. Bends in the duct alignment, due to changes in grade shall have a minimum radius of 25 feet. All 90 degree C-bends at a pole or at the building floor slab penetration, shall have a bend radius of ten times the diameter of the duct or greater.
21. After ductline has been completed, a mandrel with a square front not less than 12" long and having a diameter of 1/4" less than the inside diameter of the duct, shall be pulled through each duct after which a brush with stiff bristles shall be pulled through to make certain that no particles of earth, sand, or gravel have been left inside. Ducts shall be completely dry and clean.
22. All ducts and conduits shall have an 1800# polyester mule-tape (NEPTCO. WP 1800P, Hawaiian Telcom Material Code No. 5711154) installed throughout its entire length. All ducts shall be capped to prevent entry of foreign material during construction and at the completion of installation.
23. The respsonse to the consultation letter sent by Hawaiian Telcom during the design phase indicates potential conflict exists in the area of sign 78EBR-822. The contractor shall verify this during the construction.

KEN KAZUO HAYASHIDA
LICENSED PROFESSIONAL ENGINEER
No. 6818-S
HAWAII, U.S.A.

EXPIRATION DATE OF THE LICENSE 4/30/2018
THIS WORK WAS PREPARED BY ME OR UNDER MY SUPERVISION

STATE OF HAWAII
DEPARTMENT OF TRANSPORTATION
HIGHWAYS DIVISION

UTILITY NOTES - 1

INTERSTATE ROUTE H-1, H-2 AND H201
DESTINATION SIGN UPGRADE / REPLACEMENT, PHASE 2
Federal Aid Project NO. - NH-IM-0300(142)
Scale: As Shown Date: May 2016

SHEET No. S2.4 OF 191 SHEETS

P:\Drafting\2016-07-21_2239 Dot H1 H2 Signs Phase 2\08_2239_S2-4.dwg, 10/6/2016 7:32:38 AM, tamanaha

FED. ROAD DIST. NO.	STATE	FED. AID PROJ. NO.	FISCAL YEAR	SHEET NO.	TOTAL SHEETS
HAWAII	HAW.	NH-IM-0300(142)	2016	16	191

Water Notes:

1. Unless otherwise specified, all materials and construction of water system facilities and appurtenances shall be in accordance with the City and County of Honolulu Board of Water Supply's "Water System Standards", Dated 2002, the "Water System External Corrosion Control Standards", Volume 3, Dated 1991, and all subsequent amendments and additions.

2. All plans approved by the Board of Water Supply are based solely on the adequacy of the water supply. All other features of the water system, such as lines, grades, fittings, drainage, etc., and other features of improvements shall not be the responsibility of the Board of Water Supply.

3. The Contractor shall notify BWS Capital Projects Division, Construction Section in writing one week prior to commencing work on the water system.

4. Re-approval shall be required if this project is not under construction within a period of two years.

5. The existence and location of underground utilities and structures as shown on the plans are from the latest available data but is not guaranteed as to the accuracy or the encountering of other obstacles during the course of work. The Contractor shall be responsible and pay for all damages to existing utilities. The Contractor shall not assume that where no utilities are shown, that none exist.

6. The Contractor shall be responsible for the protection of all water lines during construction. The Contractor shall be especially careful when excavating behind water lines, tees, and bends wherever there is a possibility of water line movement due to the removal of the supporting earth beyond existing reaction blocks. The Contractor shall take whatever measure necessary to protect the water lines, such as constructing special reaction blocks (with BWS approval) and/or modifying his construction method.

7. Prior to any excavating, the Contractor shall verify in the field the location of existing water mains and appurtenances.

8. Any adjustments to the existing water system required during construction to to meet requirements of the Board of Water Supply Standards, whether shown on the plans of not, shall be done by the Contractor at no cost to the board.

9. The Contractor shall have existing water mains toned before construction of work in vicinity of water mains, call the Investigation Section at 748-5381 for toning services. Guardrail post locations are to be kept to a minimum clear distance of 18 inches to any water lines and meter boxes. No post driving will be allowed when post is to be installed closer than 3 feet from water main. Excavated areas shall be restored to their original conditions.

10. The Contractor shall verify all existing service lateral locations whether shown or not shown on the plans prior to commencing with any of the work and shall not assume that where no services are shown none exists.

Sewer Notes:

1. The underground pipes, cables or ductlines known to exist by the engineer from his research of records are indicated on the plans. The Contractor shall verify the location and depth of the facilities, including and affecting sewerlines, in the presence of the wastewater inspector and exercise proper care in excavating the area. The Contractor shall be responsible and shall pay for all damaged utilities.

2. The Contractor shall excavate a test pit at the location of the new west abutment to locate the existing 8" sewer force main. The sewerline shall be located and shored, if necessary, prior to drilling for shafts.

3. The Contractor shall notify the inspection section, wastewater branch, DPP, at 768-8197 to arrange for inspection services seven (7) days prior to commencement of the foundation excavation and submit 4 sets of approved construction plans. The Contractor shall pay for all inspection costs.

4. The Contractor shall be responsible for maintaining continuous sewer service to all affected areas during construction.

5. The Contractor shall be responsible for any sewage spills caused during construction. The Contractor shall notify the state department of health and utilize appropriate sampling and analyzing procedures. The Contractor shall be responsible for all public notifications and press releases.

Free Service For Locating Underground Utilities

1. A free service is available to Contractors for locating underground utilities. Service is provided by Underground Service Alert North, at toll free telephone no. 1-800-227-2600. Call Underground Service Alert North at least two days prior to the start of any excavation work.

KEN KAZUO HAYASHIDA
LICENSED PROFESSIONAL ENGINEER
No. 6818-S
HAWAII, U.S.A.

EXPIRATION DATE OF THE LICENSE 4/30/2018
THIS WORK WAS PREPARED BY ME OR UNDER MY SUPERVISION

STATE OF HAWAII
DEPARTMENT OF TRANSPORTATION
HIGHWAYS DIVISION

UTILITY NOTES - 2

INTERSTATE ROUTE H-1, H-2 AND H201
DESTINATION SIGN UPGRADE / REPLACEMENT, PHASE 2
Federal Aid Project NO. - NH-IM-0300(142)

Scale: As Shown Date: May 2016

SHEET No. S2.5 OF 191 SHEETS

P:\Drafting\2016-07-21_2239 Dot H1 H2 Signs Phase 2\08A_2239_S2-5.dwg, 10/6/2016 7:32:40 AM, tamanaha

FED. ROAD DIST. NO.	STATE	FED. AID PROJ. NO.	FISCAL YEAR	SHEET NO.	TOTAL SHEETS
HAWAII	HAW.	NH-IM-0300(142)	2016	17	191

WATER POLLUTION AND EROSION CONTROL NOTES:

A. GENERAL:

1. See Special Provisions Section 209 - Water Pollution and Erosion Control. Section 209 describes but is not limited to: submittal requirements; scheduling of a water pollution and erosion control conference with the Engineer; construction requirements; method of measurement; and basis of payment. In addition, Appendix A lists potential pollutant sources and corresponding BMPs used to mitigate the pollutants.

2. Follow the guidelines in current HDOT Construction Best Management Practices Field Manual in developing, installing and maintaining the Best Management Practices (BMP) for the project. For any conflicting requirements between the Manual and applicable bid documentss, the applicable bid documents will govern. Should a requirement not be clearly described within the applicable bid documents, the Contractor shall notify the Engineer immediately for interpretation. For the purposes of clarification under Note A2, "applicable bid documents" include the construction plans, standard specifications, Special Provisions, Permits, and the Storm Water Pollution Prevention Plan (SWPPP) when applicable.

3. Follow the guidelines in the Honolulu's City and County "Rules Relating to Soil Erosion Standards and Guidelines" along with applicable Soil Erosion Guidelines for projects on Maui, Molokai, Kauai and Hawaii.

4. The Engineer may assess liquidated damages of up to $27,500 for non-compliance of each BMP requirement and each requirement stated in Section 209 and special provisions, for ever day of non-compliance. there is no maximum limit on the amount assessed per day.

5. The Engineer will deduct the cost from the progress payment for all citations received by the Department for non-compliance, or the Contractor shall reimburse the State for the full amount of the outstanding cost incurred by the State.

6. If necessary, install a rain gage prior to any field work including the installation of any site-specific best management practices. The rain gage shall have a tolerance of at least 0.05 inches of rainfall. Install the rain gage on the project site in an area that will not deter rainfall from entering the gage opening. Do not install in a location where rain water may splash into rain gage. the rain gage installation shall be stable and plumbed. Do not begin field work until the rain gage is installed and site-specific best management practices are in-place.

7. Submit Site-Specific BMP Plan to the Engineer along with a completed Site-Specific BMP Review Checklist within 30 calendar days of contract execution. The Site-Specific BMP Review Checklist may be obtained from http://www.stormwaterhawaii.com.

B. WASTE DISPOSAL:

1. Waste Materials:
   Collect and store all waste materials in a securely lidded metal dumpster or roll off container with cover to keep rain out or loss of waste during windy conditions. The dumpster shall meet all local and State solid waste management regulations. Deposit all trassh and construction debris from the site in the dumpster. Empty the dumpster weekly or when the container is two-thirds full, whichever is sooner. Do not bury construction waste materials onsite. The Contractor's supervisory personnel shall be instructed regarding the correct procedure for waste disposal. Post notices stating these practices in the office trailer, on a weatherproof bulletin board, or other accessible location acceptable to the Engineer. The Contractor shall be responsible for seeing that these procedures are followed. Submit the Solid Waste Disclosure Form for Construction Sites to the Engineer within 30 calendar days of contract execution. Provide a copy of all the disposal receipts from the facility permitted by the Department of Health to receive solid waste to the Engineer monthly. This should also include documentation from any intermediate facility where solid waste is handled or processed.

2. Hazardous Waste:
   Dispose all hazardous waste materials in the manner specified by local or State regulations and by the manufacturer. The Contractor's site personnel shall be instructed in these practices and shall be responsible for seeing that the practices are followed.

3. Sanitary Waste:
   Collect all sanitary waste from the portable units a minimum of once per week, or as required. Position sanitary facilities where they are secure and will not be tipped over or knocked down.

C. EROSION AND SEDIMENT CONTROL INSPECTION AND MAINTENANCE PRACTICES:

1. For projects with an NPDES Permit for Construction Activities, inspect at the following intervals. For construction areas discharging to nutrient or sediment impaired waters, inspect all control measures at least once each week and within 24 hours of any rainfall event of 0.25 inches or greater within a 24 hour period. For construction areas discharging to waters not impaired for nutrient or sediments, inspect all control measures weekly. Inspections are only required during the project's normal working hours. the discharge point water classification may be found in the SWPPP.

2. For projects without an NPDES Permit for Construction Activities, inspect all control measures weekly.

3. Maintain all erosion and sediment control measures in good working order. If repair is necessary, initiate repair immediately and complete by the close of the next work day if the problem does not require significant repair or replacement, or if the problem can be corrected through routine maintenance. When installation of a new erosion or sediment control or a significant repair is needed, install the new or modified control or complete the repair no later than 7 calendar days from the time of discovery. "Immediately" means the Contractor shall take all reasonable measures to minimize or prevent discharge of pollutants until a permanent solution is installed and made operational. If a problem is identified at a time in the day in which it is too late to initiate repair, initiation of repair shall begin on the following work day.

4. Remove built-up sediment from silt fence when it has reached one-third the height of fence. Remove sediment from other perimeter sediment control devices when it has reached one-half the height of the device.

5. Inspect silt screen or fence for depth of sediment, tears, to verify that the fabric is securely attached to the fence posts or concrete slab and to verify that the fence posts are firmly in the ground. Inspect and verify the bottom of the silt screen is buried a minimum of 6 inches below the existing ground.

6. Inspect temporary and permanent seeding and planting for bare spots, washouts and healthy growth.

7. Complete and submit to the Engineer a maintenance inspection report within 24 hours after each inspection.

8. Provide a stabilized construction entrance at all points of exit onto paved roads to reduce vehicle tracking of sediments. Include stabilized construction entrance in the Water Pollution, Dust, and Erosion Control submittals. Minimum length should be 50 feet. Minimum width should be 30 feet. Minimum depth should be 12 inches or as recommended by the soils engineer and underlain with geo-textile fabric. If minimum dimensions cannot be met, provide other stabilization techniques that remove sediment prior to exit. Clean the paved street adjacent to the site entrance daily or as required to remove any excess mud, cold-planed materials, dirt or rock tracked from the site. Do not hose down the street without containing or vacuuming wash water. Cover dump trucks hauling material from the construction site with a tarpaulin. Remove sediment tracked onto the street, sidewalk, or other paved are by the end of the day in which the track-out occurs.

9. Include designated Concrete Washout Area(s) in Water Pollution, Dust, and Erosion Control submittals.

10. Submit the name of a specified individual designated responsible for inspections, maintenance and repair activities and filling out the inspection and maintenance report.

11. Personnel selected for the inspection and maintenance responsibilities shall receive training from Contractor. they shall be trained in all the inspection and maintenance practices necessary for keeping the erosion and sediment controls used onsite in good working order.

KEN KAZUO HAYASHIDA
LICENSED PROFESSIONAL ENGINEER
No. 6818-S
HAWAII, U.S.A.

EXPIRATION DATE OF THE LICENSE 4/30/2018
THIS WORK WAS PREPARED BY ME OR UNDER MY SUPERVISION

STATE OF HAWAII
DEPARTMENT OF TRANSPORTATION
HIGHWAYS DIVISION

WATER POLLUTION AND EROSION CONTROL NOTES - 1

INTERSTATE ROUTE H-1, H-2 AND H201
DESTINATION SIGN UPGRADE / REPLACEMENT, PHASE 2
Federal Aid Project NO. - NH-IM-0300(142)

Scale: As Shown Date: May 2016

SHEET No. S2.6 OF 191 SHEETS

P:\Drafting\2016-07-21_2239 Dot H1 H2 Signs Phase 2\09_2239_S2-6_S2-8.dwg, 10/6/2016 7:32:43 AM, tamanaha

FED. ROAD DIST. NO.	STATE	FED. AID PROJ. NO.	FISCAL YEAR	SHEET NO.	TOTAL SHEETS
HAWAII	HAW.	NH-IM-0300(142)	2016	18	191

WATER POLLUTION AND EROSION CONTROL NOTES (Cont.):

12. Contain, remove, and dispose slurry generated from saw cutting of pavement in accordance with approved BMP practices. Do not allow discharge onto the drainage system or State waters.

13. For projects with an NPDES Permit for Construction Activities, immediately initiate stabilizing exposed soil areas upon completion of earth-disturbing activities for areas where earth-disturbing activities have permanently or temporarily ceased. Earth-disturbing activities have permanently ceased when clearing and excavation within any area of the construction site that will not include permanently ceased when clearing and excavation within any area of the construction site that will not include permanent structures has been completed. Earth-distrubing activities have temporarily ceased when clearing, grading, and excavation within any area of the site that will not include permanent structures will not resume (i.e., the land will be idle) for a period of 14 or more calendar days, but such activities will resume in the future. For construction areas discharging into waters not impaired for nutrient sediments, complete initial stabilization within 14 calendar days after the temporary or permanent cessation of earth-disturbing activities. For construction areas discharging into nutrient or sediment impaired waters, complete initial stabilization within 7 calendar days after the temporary or permanent cessation of earth-disturbing activities. Classification of water at the discharge point may be found in the SWPPP.

14. For projects without an NPDES Permit for Construction Activities, complete initial stabilization within 14 calendar days after the temporary or permanent cessation of earth-distrubing activities.

D. GOOD HOUSEKEEPING BEST MANAGEMENT PRACTICES:

1. Materials Pollution Prevention Plan
   a. Applicable materials or substances listed below are expected to be present onsite during construction. Other materials and substances not listed below shall be added to the inventory.

Concrete	Cleaning Solvents
Detergents	Wood
Paints (enamel and latex)	Masonry Block
Metal Studs	Herbicides and Pesticides
Tar	Curing Compounds
Fertilizers	Adhesives
Petroleum Based Products	

   b. Use Material Management Practices to reduce the risk of spills or other accidental exposure of materials and substances to storm water runoff. Make an effort to store only enough product as is required to do the job.
   c. Store all materials stored onsite in a neat, orderly manner in their appropriate containers and if possible under a roof or other enclosure.
   d. Keep products in their original containers with the original manufacturer's label.
   e. Do not mix substances with one another unless recommended by the manufacturer.
   f. Whenever possible, use a product up completely before disposing of the container.
   g. Follow manufacturer's recommendations for proper use and disposal.
   h. Conduct a daily inspection to ensure proper use and disposal of materials onsite.

2. Hazardous Material Pollution Prevention Plan
   a. Keep products in original containers unless they are not resealable.
   b. Retain original labels and Safety Data Sheets (SDS), formerly material safety data sheets (MSDS).
   c. Dispose of surplus products according to manufacturers' instructions and local and State regulations.

3. Onsite and Offsite Product Specific Plan
   The following product specific practices shall be followed onsite:
   a. Petroleum Based Products:
      Monitor all onsite vehicles for leaks and perform regular preventive maintenance to reduce the chance of leakage. Store petroleum products in tightly sealed containers which are clearly labeled. Apply asphalt substances used onsite according to the manufacturer's recommendation.
   b. Fertilizers:
      Apply fertilizers used only in the minimum amounts recommended by the manufacturer and federal, state, and local requirements. Avoid applying just before a heavy rain event. Apply at the appropriate time of year for the location, and preferably timed to coincide as closely as possible to the period of maximum vegetation uptake and growth. Once applied, work fertilizer into the soil to limit exposure to storm water. Do not apply to storm conveyance channels with flowing water. Storage shall be in a covered shed or in an area where fertilizer will not come into contact with precipitation or stormwater. Transfer the contents of any partially used bags of fertilizer to a sealable plastic bin to avoid spills.
   c. Paints:
      Seal and store all containers when not required for use. Do not discharge excess paint to the drainage system, sanitary sewer system, or state waters. Dispose properly according to manufacturers' instructions or State and local regulations.
   d. Concrete Trucks:
      Washout or discharge concrete truck drum wash water only at a designated site as far as practicable from storm drain inlets or State water. Do not discharge water in the drainage system or State waters. Disposal by percolation is prohibited. Clean disposal site as required or as requested by Engineer.

4. Spill Control Plan

   a. Post a spill prevention plan to include measures to prevent and clean up each spill.
   b. The Contractor shall be the spill prevention and cleanup coordinator. Designate at least three site personnel who shall receive spill prevention and cleanup training. These individuals shall each become responsible for a particular phase of prevention and cleanup. Post the names of responsible spill personnel in the material storage area and in the office trailer onsite.
   c. Clearly post manufacturers' recommended methods for spill cleanup. Make site personnel aware of the procedures and the location of the information and cleanup supplies.
   d. Keep ample materials and equipment necessary for spill cleanup in the material storage area onsite.
   e. Clean up all spills immediately after discovery.
   f. Keep the spill area well ventilated. Personnel shall wear appropriate protective clothing to prevent injury from contact with a hazardous substance.
   g. Report spills of toxic hazardous material to the appropriate State or local government agency, regardless of the size. Where a leak, spill, or other release containing a hazardous substance or oil in an amount equal to or in excess of a reportable quantity established under either 40 CFR Part 110, 40 CFR Part 117, or 40 CFR Part 302 occurs during a 24-hour period, the Contractor shall notify the Engineer as soon as the Contractor has knowledge of the discharge. The Engineer will notify the National Response Center (NRC) AT (800) 424-8802, the Clean Water Branch during regular business hours at 586-4309, and the Hawaii State Hospital Operator at 247-2191 and the Clean Water Branch (DOH-CWB) via email at cleanwaterbranch@doh.hawaii.gov during non-business hours immediately. The Contractor shall also provide to the Engineer, within 7 calendars days of knowledge of the release, a description of the release, the circumstances leading to the release, and the date of the release. The Engineer will provide this information to the DOH-CWB. The Engineer will provide information to the NRC if requested.

KEN KAZUO HAYASHIDA
LICENSED PROFESSIONAL ENGINEER
No. 6818-S
HAWAII, U.S.A.

EXPIRATION DATE OF THE LICENSE 4/30/2018
THIS WORK WAS PREPARED BY ME OR UNDER MY SUPERVISION

STATE OF HAWAII
DEPARTMENT OF TRANSPORTATION
HIGHWAYS DIVISION

WATER POLLUTION AND EROSION CONTROL NOTES - 2

INTERSTATE ROUTE H-1, H-2 AND H201
DESTINATION SIGN UPGRADE / REPLACEMENT, PHASE 2
Federal Aid Project NO. - NH-IM-0300(142)

Scale: As Shown Date: May 2016

SHEET No. S2.7 OF 191 SHEETS

P:\Drafting\2016-07-21_2239 Dot H1 H2 Signs Phase 2\09_2239_S2-6_S2-8.dwg, 10/6/2016 7:32:44 AM, tamanaha

FED. ROAD DIST. NO.	STATE	FED. AID PROJ. NO.	FISCAL YEAR	SHEET NO.	TOTAL SHEETS
HAWAII	HAW.	NH-IM-0300(142)	2016	19	191

WATER POLLUTION AND EROSION CONTROL NOTES: (Cont.):

E. PERMIT REQUIREMENTS:

1. The calculated land disturbance area for this project based on the construction plans is 0.05 acres not including Contractor Staging and Storage area is one acre or greater, The Contractor shall obtain the NPDES Construction Activities Permit using HDOT's latest SWPPP template. See Hawaii Administrative Rules Chapter 11-55, Appendix C for definition of land disturbance. The Contractor shall be responsible for obtaining the required NPDES Construction Activities Permit abd complying with the requirements of HAR 11-55 including, but not limited to:

   a. Deadlines for initiating and completing initial stabilization.
   b. Increased inspection frequency and installation of rain gage if applicable.
   c. Deadlines to initiate and complete repairs to BMP's.
   d. Reporting requirements and corrective action reports.

2. Comply with all applicable State and Federal Permit conditions. Permits may include, but not limited to the following:

   a. NPDES Permit for construction Activities

   b. NPDES Permit for Construction Dewatering

   c. NPDES Permit for Hydrotesting Waters

   d. Water Quality Certification

   e. Stream Channel Alteration Permit

   f. Section 404 Army Corps of engineer Permit

F. SITE-SPECIFIC BMP REQUIREMENTS:

Each BMP below id referenced to the corresponding section of the current HDOT Construction Best Management Practices Field Manual and appropriate Supplemental Sheets. The Manual may be obtained from the HDOT Statewide Stormwater Management Program Website at http://www.stormwaterhawaii.com/resources/contractors-and-consultants/ under Construction Best Management Practices Field Manual. Supplemental BMP sheets are located at http://www.stormwaterhawaii.com/resources/contractors-and-consultants/storm-water-pollution-prevention-plan-swppp under Concrete Curing and Irrigation Water.

The requirements for Water Pollution, Dust, and Erosion Control submittals are included in Section 209 of the Hawaii Standard Specifications for Road and Bridge Construction dated 2005 and applicable Special Provisions. A list of pollutants sources and corresponding BMP used to mitigate the pollutants are included in section 209 of the Special Provisions under Appendix A.

Follow the Requirements below:

1. Protect all Drainage Inlets receiving runoff from disturbed areas (SC-2).

2. Contain on-site runoff using Perimeter Sediment Controls.
   a. SC-1 Silt Fence
   b. SC-5 Vegetated Filter Strips and Buffers
   c. SC-8 Compost Filter Berm
   d. SC-13 Sandbag Barrier
   e. SC-14 Brush or Rock Filter

3. Control off-site runnoff from entering construction area
   a. EC-8 run-On Diversion
   b. SC-6 Earth Dike
   c. SC-7 Temporary Drains and Swales

4. Incorporate applicable site Management BMP
   a. SM-1 Employee Training
   b. SM-2 Material Delivery and Storage
   c. SM-3 Material Use
   d. SM-4 Protection of Stockpiles
   e. SM-6 Solid Waste Management
   f. SM-7 Sanitary/Septic Waste Management
   g. SM-9 Hazardous Waste Management
   h. SM-10 Spill Prevention and Control
   i. SM-11 Vehicle and Equipment Cleaning
   j. SM-12 Vehicle and Equipment Maintenance
   k. SM-13 Vehicle and Equipment Refueling
   l. SM-14 Scheduling
   m. SM-15 Location of Potential Sources of Sediment
   n. SM-16 Preservation of Existing Vegetation
   o. SM-18 Dust Control

5. Contain pollutants within the Construction Staging/Storage are BMP with applicable Perimeter Sediment Controls and Site Managemment BMP. Include a Stabilized Construction Entrance/Exit (EC-2) for all areas which exit onto paved street. Restrict vehicle access to these points.

6. Manage Concrete Waste including installing a Concrete Washout Area (SM-5) and properly disposing of Concrete Curing Water (California Stormwater BMP Handbook NS-12 Concrete Curing)

7. Remove saw cut slurry and hydrodemolition water from the site by vacuuming. Provide storm drain protection and/or perimeter sediment controls during saw cutting and hydrodemolition work.

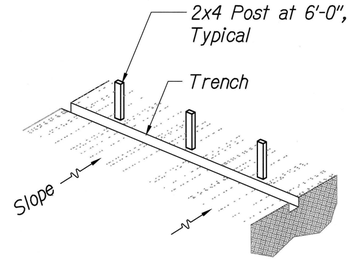

1. Set posts and excavate a 6"x6" trench upslope along the line of posts.

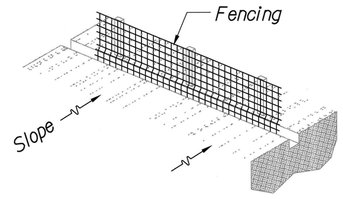

2. Staple wire fencing to the posts.

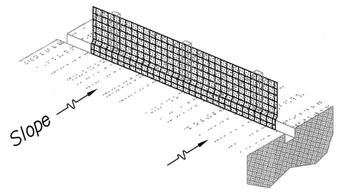

3. Attach the filter fabric to the wire fence and extend it into the trench.

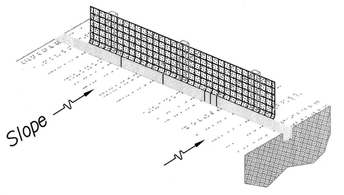

4. Attach the filter fabric to the wire

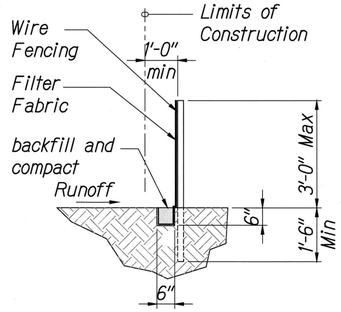

KENT KAZUO HAYASHIDA
LICENSED PROFESSIONAL ENGINEER
No. 6818-S
HAWAII, U.S.A.

EXPIRATION DATE OF THE LICENSE 4/30/2018
THIS WORK WAS PREPARED BY ME OR UNDER MY SUPERVISION

STATE OF HAWAII
DEPARTMENT OF TRANSPORTATION
HIGHWAYS DIVISION

WATER POLLUTION AND EROSION CONTROL NOTES - 3

INTERSTATE ROUTE H-1, H-2 AND H201
DESTINATION SIGN UPGRADE / REPLACEMENT, PHASE 2
Federal Aid Project NO. - NH-IM-0300(142)

Scale: As Shown Date: May 2016

SHEET No. S2.8 OF 191 SHEETS

P:\Drafting\2016-07-21_2239 Dot H1 H2 Signs Phase 2\09_2239_S2-6_S2-8.dwg, 10/6/2016 7:32:44 AM, tamanaha

FED. ROAD DIST. NO.	STATE	FED. AID PROJ. NO.	FISCAL YEAR	SHEET NO.	TOTAL SHEETS
HAWAII	HAW.	NH-1M-0300(142)	2016	20	191

STRUCTURAL NOTES:

1. General:
   - A. Workmanship and materials shall conform to the AASHTO LRFD Bridge Design Specification, 7th Edition, 2014 including its subsequent interim specifications, AASHTO A Policy on Geometric Design of Highway and Streets 2011 and subsequent revisions, AASHTO Roadside Design Guide, AASHTO Standard Specifications for Structural Supports for Highway Signs, Luminaries and Traffic Signals, 6th Edition 2013 and subsequent revisions, Hawaii Department of Transportation, Highways Division, Design Branch, Design Criteria for Bridges and Structures, dated August 8, 2014, Manual on Uniform Traffic Control Devices 2004 and the Hawaii Standard Specifications for Bridge and Road Construction, 2005 as modified by the State of Hawaii Department of Transportation.
   - B. The Contractor shall compare the Electrical and Structural drawings with each other and report in writing to the Engineer, inconsistencies or omissions.
   - C. The Contractor shall take field measurements and verify field conditions and shall compare such field measurements and conditions with the drawings before commencing the work. Report in writing to the Engineer all inconsistencies or omissions.
   - D. The Contractor shall be responsible for methods of construction, workmanship and job safety. The Contractor shall provide temporary shoring and bracing as required for stability of structural members and systems.
   - E. Details noted as typical on structural drawings shall apply in all conditions unless specifically shown or noted otherwise.
   - F. The Contractor shall be responsible for coordinating the work of all trades.
   - G. The Contractor shall be responsible for protection of the adjacent properties, retaining walls, structures, streets, and utilities during the construction period. Any damage or deteriorated property shall be restored to the same or better condition at no cost to the State.
   - H. All sign support posts shall be outside of the clear zone or shielded by an appropriate traffic barrier system. The traffic barrier system shall be submitted to the Engineer for his approval.

2. Design Criteria:
   - A. Basic Wind Speed ——— 105 MPH
   - B. Recurrence Interval ——— 100 Years
   - C. Fatigue Category ——— I
   - D. Maximum Posted Speed ——— 60 MPH
   - E. Galloping force is considered for cantilevered sign structures.
   - F. Sign structures are designed for a truck induced gust based on a truck speed of 20 MPH over the maximum posted speed.
   - G. Natural wind gusts are considered for all sign structures.
   - H. Foundation Design (See Notes 3.A and 3.B):
     Spread Footings (Strength Condition State):
     - a. Sign H1WBR-451
       - Bearing Capacity ——— 2,500 psf
       - Coefficient of Friction ——— 0.4
       - Passive Earth Pressure ——— 300 pcf

3. Foundation:
   - A. Except for the special design signs listed in item 3.B, all the other sign foundations are determined according to the State of Hawaii Standard Plan (2007), with appropriate assumption based on field investigation. For the locations with rock outcropping, rock condition is assumed; for the rest of signs, stiff clay above the ground water table is assumed. Field adjustment is allowed per DOT approval if conditions otherwise are encountered during the excavation.
   - B. Special design for the foundation of H1WBR-451 is based on Foundation Investigation H-1 Freeway Sign Project Various Locations, Oahu, Hawaii by Hirata & Associates, Inc., dated September 28, 2011.
   - C. Contractor shall provide for de-watering of excavation from either surface water, ground water or seepage. NPDES permit required for discharging water into state waters or City and County of Honolulu sewer or stormwater drainage systems.
   - D. Contractor shall provide for design and installation of all cribbing, sheeting, and shoring necessary for personnel safety and to preserve excavations and earth banks, and adjacent structures and property for damage.
   - E. Excavation boundaries and grade elevations for footing shall be approved by the Engineer prior to placing the concrete and reinforcing.
   - F. Unless noted otherwise, backfill shall be Type A structure backfill in accordance to Section 703.20, the 2005 State of Hawaii Standard Specifications. Backfill shall be placed in uniform lifts of no more than 8 inches in loose thickness and uniformly compacted to at least 95 percent relative compaction.

4. Concrete:
   - A. Concrete shall be regular weight concrete and shall have the following minimum 28-day compressive strengths:
     - a. Drilled Shaft Foundation ——— 4,500 psi
     - b. All other concrete ——— 4,500 psi

     All concrete shall have maximum w/c ratio of 0.45.
   - B. All inserts, anchor bolts, plates, etc. embedded in concrete shall be hot-dip galvanized unless otherwise noted.
   - C. Conduits, pipes, and sleeves passing through a wall not conforming to typical details shall be located and submitted to the Engineer for approval.
   - D. Non-shrink grouts shall be a premixed compound consisting of non-staining non-metallic aggregate, cement, water reducing and plasticizing agents capable of developing minimum compressive strength of 4,000 psi in 3 days and 7,000 psi in 28 days.
   - E. Unless otherwise noted, chamfer all concrete edges 3/4".
   - F. Concrete delivery tickets shall record all free water in the mix: at batching by plant, for consistency by driver, and any additional request by Contractor if permitted by the mix design.
   - G. Reinforcing bars, anchor bolts, inserts and other items to be cast in the concrete shall be secured in position prior to placement of concrete.

5. Reinforcing Steel:
   - A. Reinforcing steel shall be deformed bars conforming to ASTM A615, Grade 60.
   - B. Clear concrete coverage for reinforcing bars shall be as follows, unless otherwise noted:
     - a. Drilled Shaft Foundation ——— 3"
     - b. Bridge Mounted Sign Post Support ——— 3"
     - b. All Others ——— 2"
   - C. Splices:
     - a. Reinforcing steel shall be spliced only where indicated on plans. Provide lap splice length per typical details and schedule, Sheet S2.11 unless otherwise noted.
   - D. Bar bends and hook shall be "standard hooks" in accordance with Typical Details, Sheet S3.3.

6. Existing Concrete
   - A. The Contractor shall review as-built drawings prior to performing the work. These drawings are available at the Department of Transportation, Highways Division. Verify location of existing reinforcement with an electromagnetic rebar locator before drilling holes into existing concrete. Holes may need to be adjusted to avoid existing reinforcement.
   - B. Contractor shall not damage, cut or drill through existing reinforcing that is to remain and as noted on plans. If reinforcing is damaged, the Contractor shall inform the Engineer immediately and shall be responsible for repairing the damage at Contractor's sole expense and to the satisfaction of the Engineer.
   - C. All holes which need to be abandoned due to the presence of reinforcing, shall be filled with non-shrink grout.
   - D. The Contractor will not be paid for the holes which need to be filled and abandoned. The Engineer shall review and approve all relocated holes prior to installing dowels.
   - E. All drilled holes for anchors shall be brushed to remove loose material then cleaned with compressed air, prior to injecting the epoxy.
   - F. Anchoring adhesive shall be a two-component 100% solids epoxy based system supplied in manufacturer's standard side-by-side cartridge and dispensed through a static-mixing nozzle supplied by the manufacturer. Epoxy shall meet the minimum requirements of ASTM C-881 specification for Type IV, Grade 3, Class C and must develop a minimum of 12,650 PSI compressive yield strength after 7 day cure. Epoxy must have a heat deflection temperature of a minimum 136°F (58°C). Epoxy shall be formulated for optimum performance in both cracked and uncracked concrete (Simpson Set-XP or approved equal).

KEN KAZUO HAYASHIDA
LICENSED PROFESSIONAL ENGINEER
No. 6818-S
HAWAII, U.S.A.

EXPIRATION DATE OF THE LICENSE 4/30/2018
THIS WORK WAS PREPARED BY ME OR UNDER MY SUPERVISION

STATE OF HAWAII
DEPARTMENT OF TRANSPORTATION
HIGHWAYS DIVISION

STRUCTURAL NOTES - 1

INTERSTATE ROUTE H-1, H-2 AND H201
DESTINATION SIGN UPGRADE / REPLACEMENT, PHASE 2
Federal Aid Project NO. - NH-1M-0300(142)

Scale: As Shown Date: May 2016

SHEET No. S3.1 OF 191 SHEETS

P:\Drafting\2016-07-21_2239 Dot H1 H2 Signs Phase 2\10_2239_S3-1.dwg, 10/6/2016 7:32:47 AM, tamanaha

FED. ROAD DIST. NO.	STATE	FED. AID PROJ. NO.	FISCAL YEAR	SHEET NO.	TOTAL SHEETS
HAWAII	HAW.	NH-IM-0300(142)	2016	21	191

6. Structural Steel:
   A. Fabrication and erection of structural steel shall conform to the American Institute of Steel Construction, Manual of Steel Construction, 13th Edition. See Section 512 - Sign Structural Steel Construction for the qualifications for Fabricator and Erector.
   B. Structural steel shall conform to ASTM A36, unless otherwise noted.
   C. Steel wide flange sections shall conform to ASTM A992. Steel tubes shall conform to ASTM A500, Grade B.
   D. All steel members shall be hot-dipped galvanized after fabrication.
   E. All connection bolts shall be ASTM A325 bolts and anchor bolts shall be ASTM F1554, Grade 105 bolts. All bolts shall be hot-dipped galvanized.
   F. Welds and welding procedures shall conform to the structural welding code AWS D1.1 of the American Welding Society.
   G. Welding shall be performed by welders that are prequalified for applicable welding procedures.
   H. Welding electrodes shall be E70XX.
   I. Unless otherwise noted all truss members shall be welded all around at joints with 1/4" fillet welds.
   J. Aluminum members and surfaces in contact with structural steel shall be isolated with neoprene material as approved by the Engineer. The Contractor shall submit isolation product for review and approval.
   K. The contractor shall use templates while installing the anchor bolts. Anchor bolts shall be vertical.
   L. Plumbness of Anchor Bolts: Anchor bolts shall be installed with misalignment of less than 1:40 from vertical. After installation, firm contact shall exist between the anchor bolt nuts, washers, and base plate on any anchor bolt installed in a misaligned position. All anchor bolts not within tolerance shall be removed and replaced at no cost to the State. Any anchor bolts that are not plumb shall be removed and new anchor bolts cast into the concrete foundation. the design of the new anchor bolts and modified concrete foundation shall be provided by the contractor to the engineer for review

Painting Notes:

1. Contractor shall shop coat all members. Field coating shall consist of touch up only.
2. The touch up paint shall consist of the following:
   a. prepare surface per SSPC-SP1, solvent cleaning.
   b. apply first and second coat according to paint schedule
3. Color for top coat shall be dark green, as proposed by the contractor and approved by the Engineer. Intermediate coat shall have contrasting light color. Finish for top coat shall not be gloss or high gloss.
4. Multiple coats may be required to obtain minimum dry film thickness (DFT).
5. All hot-dip galvanized coating that is damaged shall be repaired. The repairs shall consist of the following:
   a. Prepare surface per SSPC-SP1, solvent cleaning.
   b. Apply (2) coats of cold applied, galvanizing compound containing 95% metallic zinc content by weight in dry film and 52% solids content by volume.
   c. Application rate shall be 1.5 mils dry film thickness per coat.
   d. Rust scale shall be cleaned per SSPC-SP3.
   e. The coating shall be applied at sufficient wet film thickness to achieve a minimum dry film.
   f. The coating shall be well stirred before use so that it is completely homogeneous during application.
   g. Minimum dry film build is 3 mils, using manufacturer's recoat time directions.
   h. After galvanizing repairs are complete, apply touch-up paint system according to paint schedule.
6. Cost of galvanizing and painting is incidental to the structural steel.
7. The preparation of newly-galvanized steel surfaces shall conform to ASTM D6386. If the paint is to be applied beyond 48 hours after galvanizing the surface preparation of the galvanized surface shall be according to the paint schedule. All galvanized surfaces shall be lightly abraded and the surfaces roughened before following surface preparation instructions in paint schedule.
8. All exposed portions of the anchor bolts and nuts, including those beneath the base plate, shall be field painted with the 1st and top coats after erection of the sign structure is completed.

PAINT SCHEDULE *

SPECIAL COATING SCHEDULE FOR ZINC COATED SIGN STRUCTURES

	OPTION 1	OPTION 2	OPTION 3	OPTION 4
PREPARATION:	Carboline thinner #2 or surface cleaner #3, per SSPC-SP1, Apply Rustbond Penetrating Sealer.	Solvent clean per SSPC-SP1, and as recommended by the manufacturer	Solvent clean per SSPC-SP1, and as recommended by the manufacturer	Solvent clean per SSPC- SP1. Apply Galvanized Zinc Treatment (Acid Etching)
1ST COAT:	Carboline Carboguard 890 epoxy DFT 5 mil (min) WFT 7 mil (min)	Tnemec High-Build Epoxoline II Series N69 DFT 5 mil (min) WFT 7 mil (min)	Sherwin Williams Tile Clad High Solids B62 Series DFT 4 mil (min) WFT 7 mil (min)	Ameron Amercoat 385 epoxy DFT 5 mil (min) WFT 8 mil (min)
RECOATING TIME:	8 HRS (min) 2 Days (max)	10 HRS (min) 2 Days (max)	8 HRS (min) 2 Days (max)	8 HRS (min) 2 Days (max)
TOP COAT:	Carboline Carbothane 133HB Alyphatic polyurethane DFT 5 mil (min) WFT 7 mil (max)	Tnemec Endura-Shield Series 75 DFT 4 mil (min) WFT 7 mil (min)	Sherwin Williams Corothane II B65 W200 Series/B60V2 DFT 4 mil (min) WFT 7 mil (min)	Ameron Amercoat 450 SA Polyurethane DFT 4 mil WFT 7 mil
TOP COAT COLOR:	Dark Green, submit color chips for approval.			

* For paint schedule, use the brand names listed, or equal as approved by the Engineer.

KEN KAZUO HAYASHIDA
LICENSED PROFESSIONAL ENGINEER
No. 6818-S
HAWAII, U.S.A.

EXPIRATION DATE OF THE LICENSE 4/30/2018
THIS WORK WAS PREPARED BY ME OR UNDER MY SUPERVISION

STATE OF HAWAII
DEPARTMENT OF TRANSPORTATION
HIGHWAYS DIVISION

STRUCTURAL NOTES - 2

INTERSTATE ROUTE H-1, H-2 AND H201
DESTINATION SIGN UPGRADE / REPLACEMENT, PHASE 2
Federal Aid Project NO. - NH-IM-0300(142)
Scale: As Shown Date: May 2016

SHEET No. S3.2 OF 191 SHEETS

P:\Drafting\2016-07-21_2239 UGH H1 H2 Signs Phase 2\11_2239_S3-2.dwg, 10/6/2016 7:32:50 AM, tamahana

FED. ROAD DIST. NO.	STATE	FED. AID PROJ. NO.	FISCAL YEAR	SHEET NO.	TOTAL SHEETS
HAWAII	HAW.	NH-IM-0300(142)	2016	22	191

MINIMUM SPLICE AND EMBEDMENT LENGTHS

Bar Size	Concrete Strength = 4,500 PSI				
	Lap Splice		Embedment		
			Straight		With Standard 90° Hook
	Other Bars	Top Bar	Other Bars	Top Bar	
#3, #4	21"	29"	12"	17"	10"
#5	26"	36"	15"	21"	12"
#6	31"	43"	18"	26"	16"
#7	39"	54"	23"	32"	18"
#8	51"	71"	30"	42"	20"
#9	64"	90"	38"	53"	22"
#10	81"	114"	48"	67"	26"
#11	100"	140"	59"	82"	28"

Note:
"Top Bars" are Horizontal Bars with 12" or more of Concrete cast below.

TYPICAL REBAR
SPLICE AND EMBEDMENT LENGTH SCHEDULE — 1 — S3.3 | S3.3
No Scale

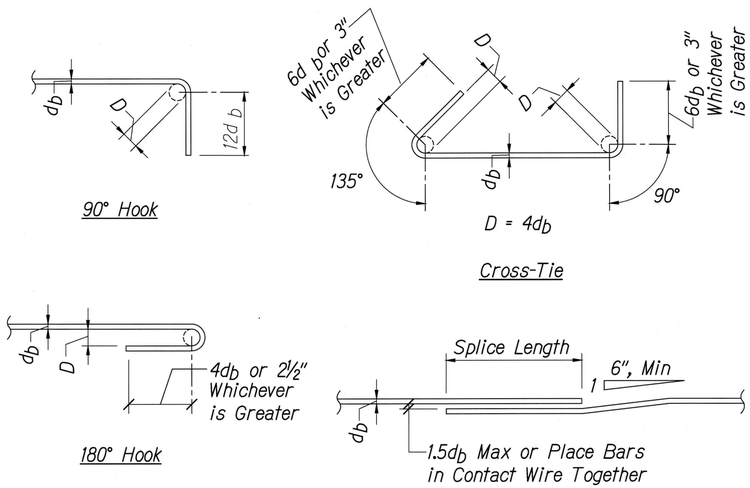

STANDARD HOOKS AND CROSS-TIE DETAIL — 2 — S3.3 | S3.3
Not to Scale

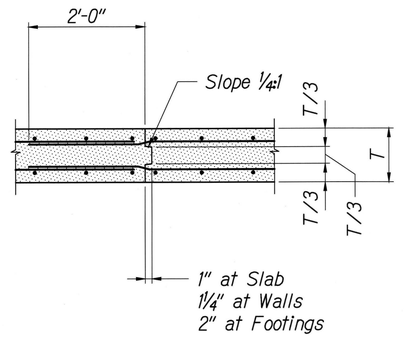

TYPICAL REBAR
CONSTRUCTION JOINT DETAIL — 3 — S3.3 | S3.3
No Scale

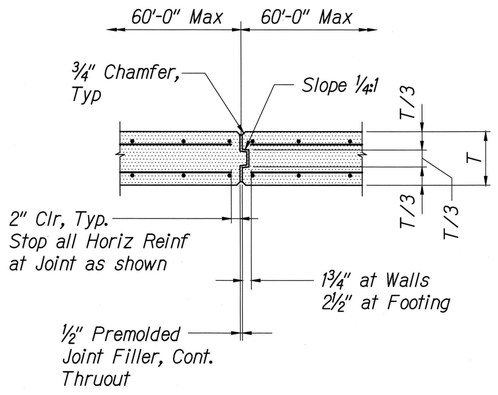

TYPICAL REBAR
EXPANSION JOINT DETAIL — 4 — S3.3 | S3.3
No Scale

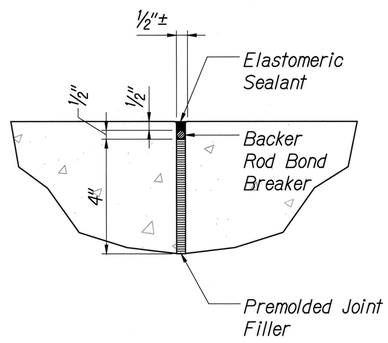

EXPANSION JOINT DETAIL — 5 — S5.10, S5.12 | S3.3
No Scale

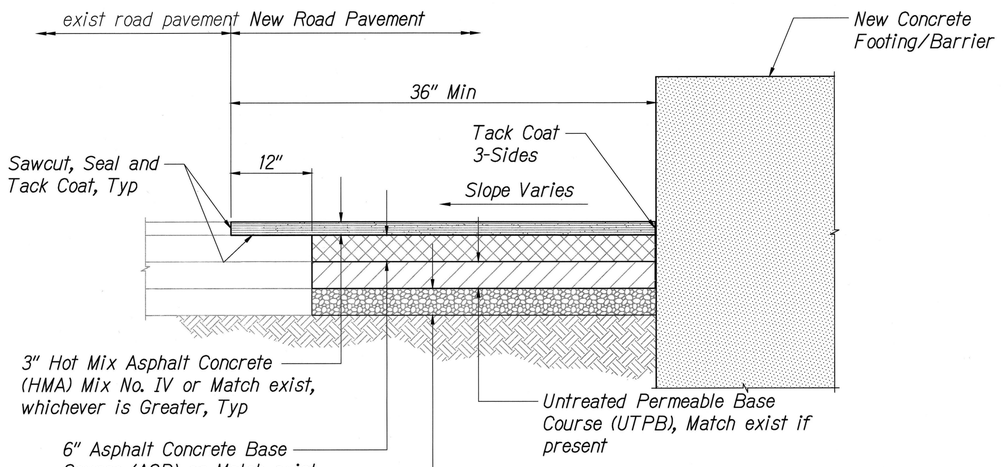

TYPICAL
PAVEMENT REPAIR DETAIL — 6 — S4.4, S4.7, S4.8, S4.10, S4.11, S5.12 | S3.3
No Scale

KEN KAZUO HAYASHIDA
LICENSED PROFESSIONAL ENGINEER
No. 6818-S
HAWAII, U.S.A.

EXPIRATION DATE OF THE LICENSE 4/30/2018
THIS WORK WAS PREPARED BY ME OR UNDER MY SUPERVISION

STATE OF HAWAII
DEPARTMENT OF TRANSPORTATION
HIGHWAYS DIVISION

TYPICAL DETAILS

INTERSTATE ROUTE H-1, H-2 AND H201
DESTINATION SIGN UPGRADE / REPLACEMENT, PHASE 2
Federal Aid Project NO. - NH-IM-0300(142)
Scale: As Shown Date: May 2016

SHEET No. S3.3 OF 191 SHEETS

P:\Drafting\2016-07-21_2239 Dot H1 H2 Signs Phase 2\12_2239_S3-3.dwg, 10/6/2016 7:32:53 AM, tamanaha

FED. ROAD DIST. NO.	STATE	FED. AID PROJ. NO.	FISCAL YEAR	SHEET NO.	TOTAL SHEETS
HAWAII	HAW.	NH-IM-0300(142)	2016	23	191

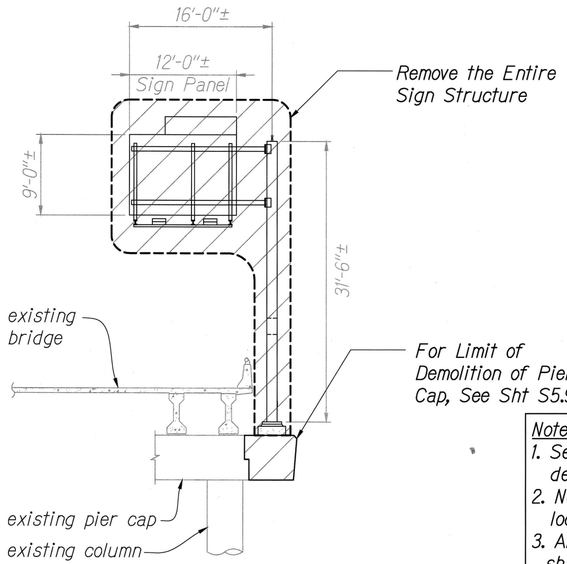

SIGN H1EB-112
DEMOLITION DETAIL - ELEVATION
Scale: 1/8" = 1'-0"

1
S3.4 | S3.4

Notes:
1. See Sht E3.1 Electrical demolition details.
2. New sign post shall be the same location as the existing.
3. All existing rebars at pier cap shall be salvaged and embedded into new concrete section.
4. Do not cut any of the existing horizontal rebars. They shall be cleaned and included in new foundation.

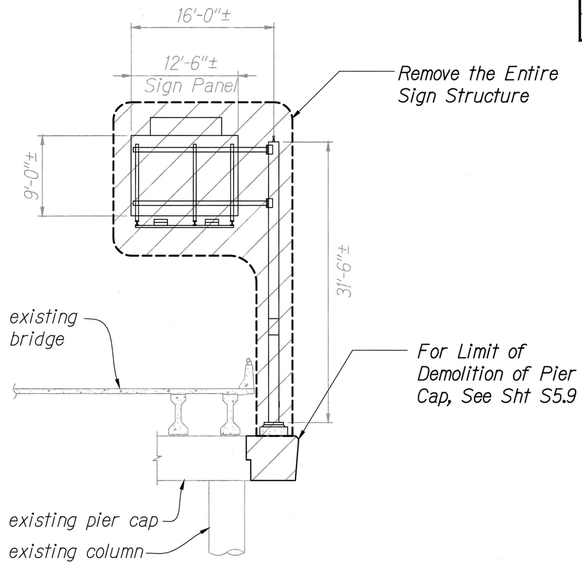

SIGN H1EB-113
DEMOLITION DETAIL - ELEVATION
Scale: 1/8" = 1'-0"

2
S3.4 | S3.4

Notes:
1. See Sht E3.2 Electrical demolition details.
2. New sign post shall be the same location as the existing.
3. All existing rebars at pier cap shall be salvaged and embedded into new concrete section.
4. Do not cut any of the existing horizontal rebars. They shall be cleaned and included in new foundation.

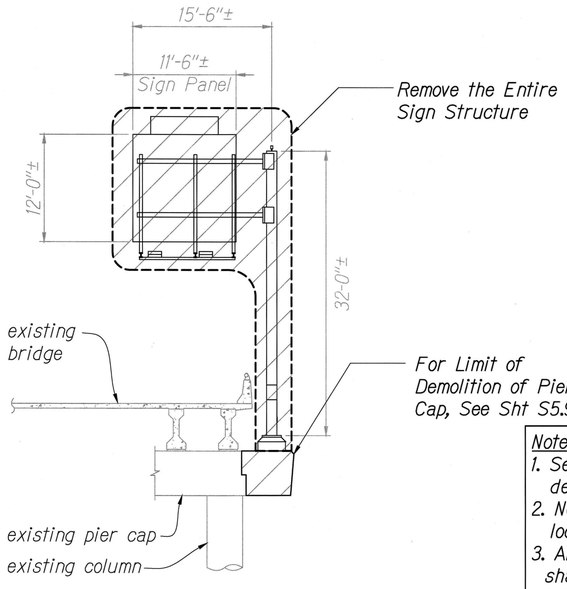

SIGN H1EB-114
DEMOLITION DETAIL - ELEVATION
Scale: 1/8" = 1'-0"

3
S3.4 | S3.4

Notes:
1. See Sht E3.3 Electrical demolition details.
2. New sign post shall be the same location as the existing.
3. All existing rebars at pier cap shall be salvaged and embedded into new concrete section.
4. Do not cut any of the existing horizontal rebars. They shall be cleaned and included in new foundation.

TYPICAL DEMOLITION NOTES:

1. Before commencing demolition, all appropriate traffic control plans and bmp's shall be in place and functioning properly. The contractor shall take the utmost care to protect vehicles and the workers. The contractor is responsible for the design, construction and maintenance of the bmp's, barrier and protection system.
2. The contractor shall review the as-built drawings prior to performing the demolition work.
3. See sheet S3.1 for the structural notes for existing concrete and other related notes.
4. The contractor shall not damage, cut or drill through the existing reinforcing that is to remain, as noted on the plans. If reinforcing is damaged, the contractor shall inform the engineer immediately and shall be responsible for repairing the damage at contractor's sole expensed and to the satisfation of the engineer.
5. The contractor shall not damage the remaining portion of structural members during the demolition phase. If damage occurs, the contractor shall inform the engineer immediate and shall be responsible for repairing the damage at contractor's sole expensed and to the satisfaction of the engineer.
6. The salvaged reinforcing steel shall be fully cleaned of all concrete, dust, oil, grease and all other bond inhibiting materials, and shall be embedded into the new concrete section. Cut rebars as required to provide minimum concrete cover.
7. The contractor shall also see electrical for demolition works. All utilities to remain unless called out for demolition. All utilities shall be protected during the entire project.
8. Saw cut all lines along limits of demolition.
9. These notes above apply to sheets S3.4 to S3.10 and all demolition plan/details.
10. The dimensions of the existing foundation is shown per as-built plan and for informational purpose. The contractor to field verify before the demolition work.

Legend:

Demolition Area

KEN KAZUO HAYASHIDA
LICENSED PROFESSIONAL ENGINEER
No. 6818-S
HAWAII, U.S.A.

EXPIRATION DATE OF THE LICENSE 4/30/2018
THIS WORK WAS PREPARED BY ME OR UNDER MY SUPERVISION

STATE OF HAWAII
DEPARTMENT OF TRANSPORTATION
HIGHWAYS DIVISION

DEMOLITION PLAN - 1

INTERSTATE ROUTE H-1, H-2 AND H201
DESTINATION SIGN UPGRADE / REPLACEMENT, PHASE 2
Federal Aid Project NO. - NH-IM-0300(142)
Scale: As Shown Date: May 2016

SHEET No. S3.4 OF 191 SHEETS

P:\Drafting\2016-07-21_2239 D6T H1 H2 Signs Phase 2\13_2239_S3-4_S3-9.dwg, 10/6/2016 7:32:56 AM, tamahana

FED. ROAD DIST. NO.	STATE	FED. AID PROJ. NO.	FISCAL YEAR	SHEET NO.	TOTAL SHEETS
HAWAII	HAW.	NH-IM-0300(142)	2016	24	191

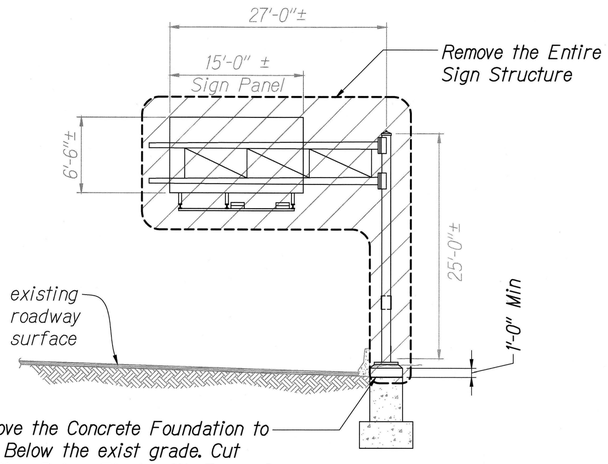

SIGN H1EB-308
DEMOLITION DETAIL - ELEVATION

Scale: 1/8" = 1'-0"

1
S3.5 | S3.5

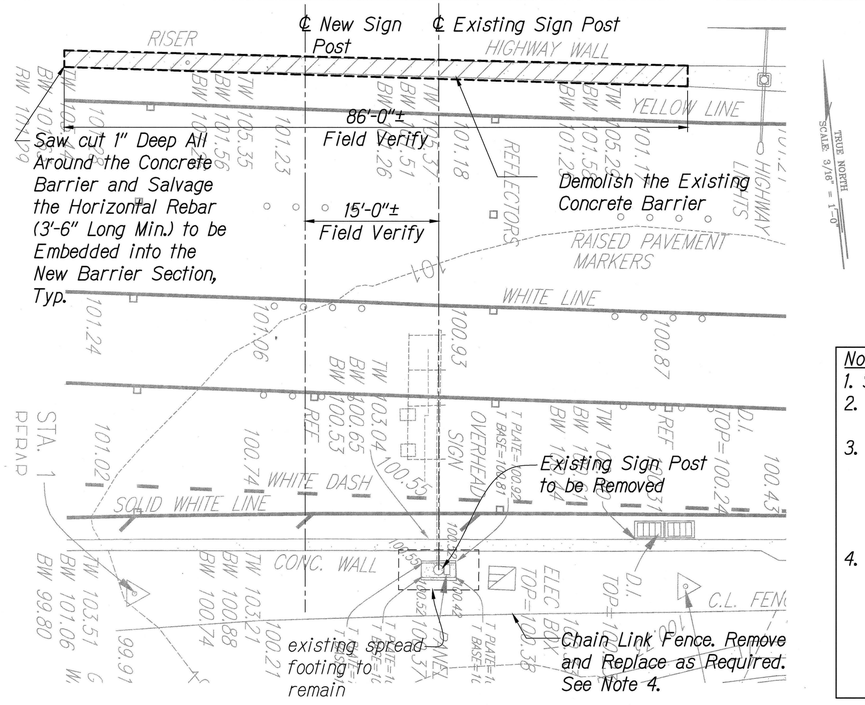

Notes:
1. See Sht E3.4 Electrical demolition details.
2. See Sht S5.10 for the details of the restoration concrete barrier.
3. The remaining concrete barrier shall not be damaged when removing the existing sign. If damage occurs, the contractor shall restore the barrier to the condition prior to the beginning of the work at no cost to the State.
4. The existing chain link fence shall be partially removed, as required, to accomodate construction of the new foundation. A new section of chainlink fence shall be installed in its place. The cost for removed and replacement of the fence shall be incidental to the various contract items.

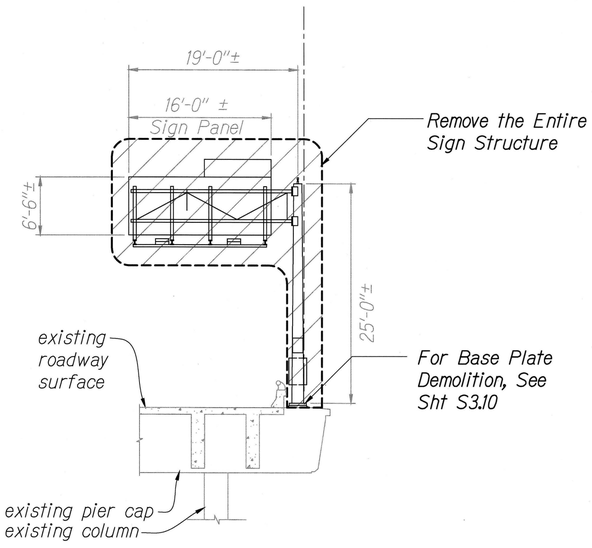

Notes:
1. See Sht E3.5 Electrical demolition details.
2. New sign post shall be the same location as the existing.
3. Temporary sign shall be set up and operational before demolition of sign.

SIGN H1WB-402
DEMOLITION DETAIL - ELEVATION

Scale: 1/8" = 1'-0"

2
S3.5 | S3.5

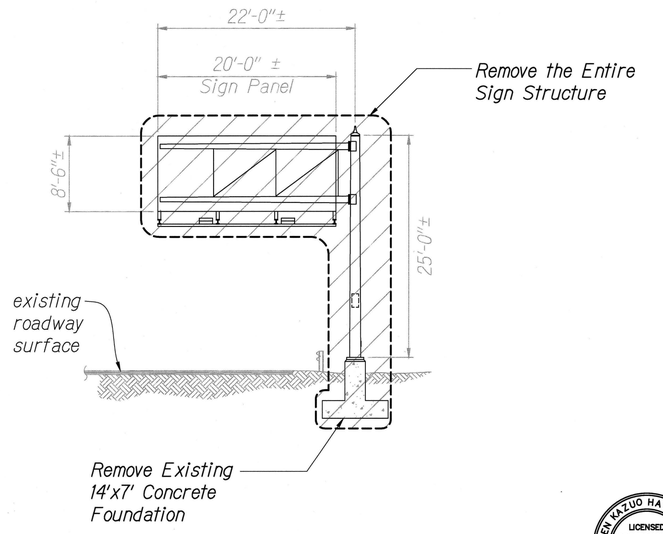

Notes:
1. See Sht E3.7 Electrical demolition details.
2. New sign post shall be the same location as the existing.
3. Temporary sign shall be set up and operational before demolition of sign.

Legend:

Demolition Area

SIGN H1WB-418
DEMOLITION DETAIL - ELEVATION

Scale: 1/8" = 1'-0"

3
S3.5 | S3.5

KEN KAZUO HAYASHIDA
LICENSED PROFESSIONAL ENGINEER
No. 6818-S
HAWAII, U.S.A.

EXPIRATION DATE OF THE LICENSE 4/30/2018
THIS WORK WAS PREPARED BY ME OR UNDER MY SUPERVISION

STATE OF HAWAII
DEPARTMENT OF TRANSPORTATION
HIGHWAYS DIVISION

DEMOLITION PLAN - 2

INTERSTATE ROUTE H-1, H-2 AND H201
DESTINATION SIGN UPGRADE / REPLACEMENT, PHASE 2
Federal Aid Project NO. - NH-IM-0300(142)
Scale: As Shown Date: May 2016

SHEET No. S3.5 OF 191 SHEETS

P:\Drafting\2016-07-21_2239 Dot H1 H2 Signs Phase 2\13_2239_S3-4_S3-9.dwg, 10/6/2016 7:32:56 AM, tamanaha

FED. ROAD DIST. NO.	STATE	FED. AID PROJ. NO.	FISCAL YEAR	SHEET NO.	TOTAL SHEETS
HAWAII	HAW.	NH-IM-0300(142)	2016	25	191

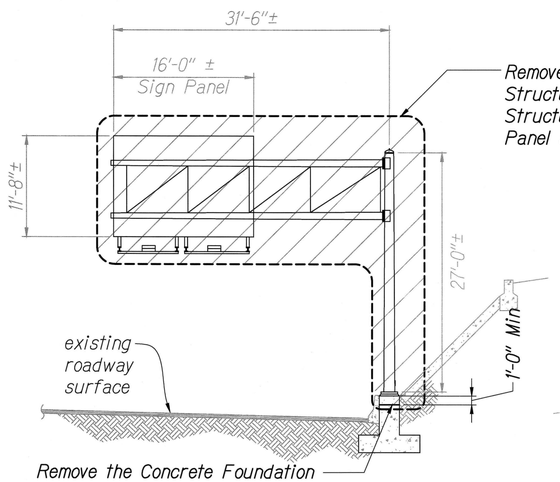

FRONT ELEVATION

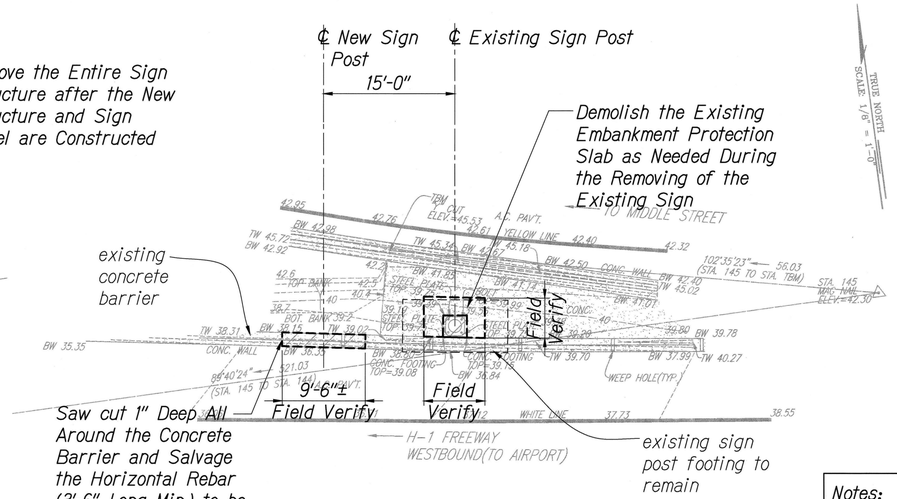

PLAN

SIGN H1WB-424
DEMOLITION DETAIL - ELEVATION

Scale: 1/8" = 1'-0"

1
S3.6 | S3.6

Notes:
1. See Sht E3.7 Electrical demolition details.
2. See Detai 3/S5.12 for the restoration embankment protection slab and concrete barrier.
3. The existing concrete barrier shall not be damaged when removing the existing sign. If damage occurs, the contractor shall restore the barrier to the condition prior to the beginning of the work at no cost to the State.

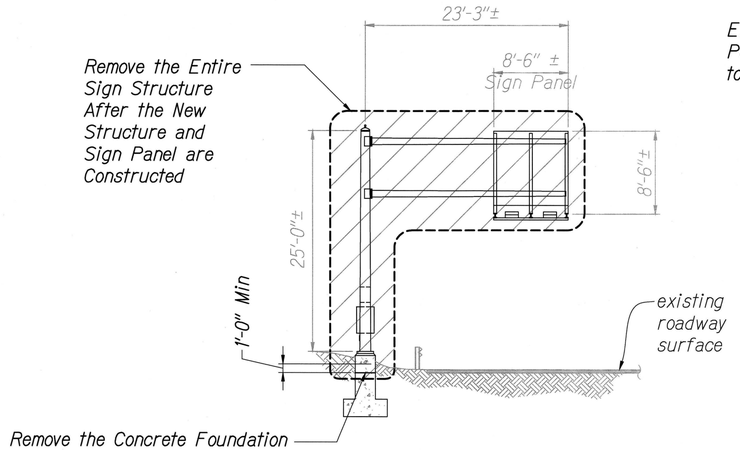

FRONT ELEVATION

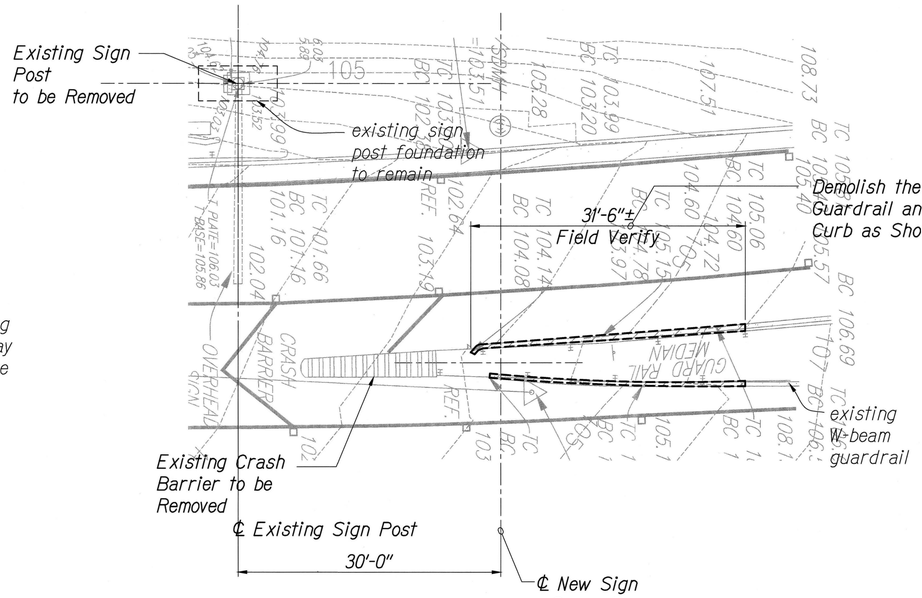

PLAN

Legend:

Demolition Area

Notes:
1. See Sht E3.6 Electrical demolition details.

SIGN H1WBR-451
DEMOLITION DETAIL - ELEVATION

Scale: 1/8" = 1'-0"

2
S3.6 | S3.6

KEN KAZUO HAYASHIDA
LICENSED PROFESSIONAL ENGINEER
No. 6818-S
HAWAII, U.S.A.

EXPIRATION DATE OF THE LICENSE 4/30/2018
THIS WORK WAS PREPARED BY ME OR UNDER MY SUPERVISION

STATE OF HAWAII
DEPARTMENT OF TRANSPORTATION
HIGHWAYS DIVISION

DEMOLITION PLAN - 3

INTERSTATE ROUTE H-1, H-2 AND H201
DESTINATION SIGN UPGRADE / REPLACEMENT, PHASE 2
Federal Aid Project NO. - NH-IM-0300(142)
Scale: As Shown Date: May 2016

SHEET No. S3.6 OF 191 SHEETS

P:\Drafting\2016-07-21_2239 Dot H1, H2 Signs Phase 2\13_2239_S3-4_S3-9.dwg, 10/6/2016 7:32:57 AM, tamanaha

FED. ROAD DIST. NO.	STATE	FED. AID PROJ. NO.	FISCAL YEAR	SHEET NO.	TOTAL SHEETS
HAWAII	HAW.	NH-IM-0300(142)	2016	26	191

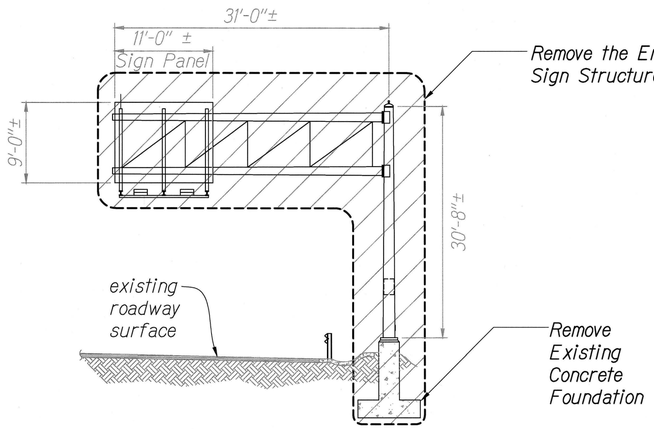

Notes:
1. See Sht E3.9 Electrical demolition details.
2. New sign post shall be the same location as the existing.

SIGN H1WB-605
DEMOLITION DETAIL - ELEVATION

Scale: 1/8" = 1'-0"

1
S3.7 | S3.7

Legend:

Demolition Area

KEN KAZUO HAYASHIDA
LICENSED PROFESSIONAL ENGINEER
No. 6818-S
HAWAII, U.S.A.

EXPIRATION DATE OF THE LICENSE 4/30/2018
THIS WORK WAS PREPARED BY ME OR UNDER MY SUPERVISION

STATE OF HAWAII
DEPARTMENT OF TRANSPORTATION
HIGHWAYS DIVISION

DEMOLITION PLAN - 4

INTERSTATE ROUTE H-1, H-2 AND H201
DESTINATION SIGN UPGRADE / REPLACEMENT, PHASE 2
Federal Aid Project NO. - NH-IM-0300(142)

Scale: As Shown Date: May 2016

SHEET No. S3.7 OF 191 SHEETS

P:\Drafting\2016-07-21_2239 Dot H1 H2 Signs Phase 2\13_2239_S3-4_S3-9.dwg, 10/6/2016 7:32:58 AM, tamanaha

FED. ROAD DIST. NO.	STATE	FED. AID PROJ. NO.	FISCAL YEAR	SHEET NO.	TOTAL SHEETS
HAWAII	HAW.	NH-IM-0300(142)	2016	27	191

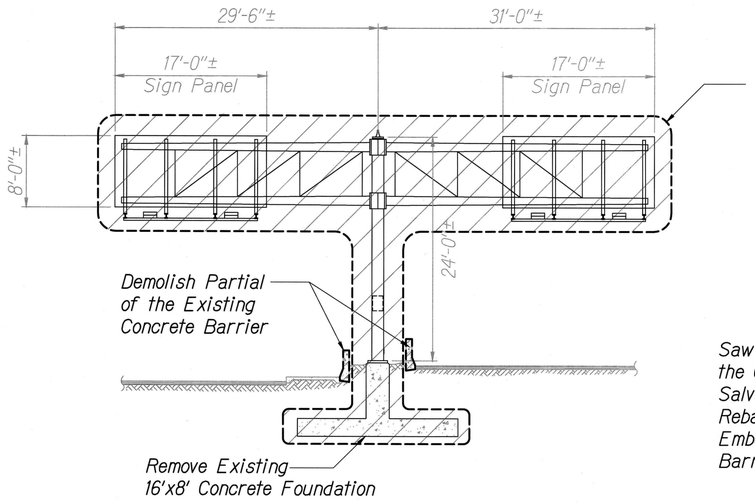

FRONT ELEVATION

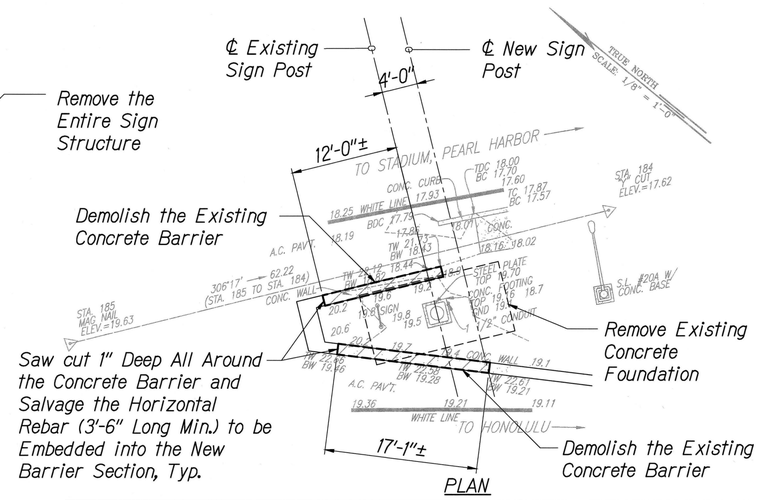

Notes:
1. See Sht E3.9 Electrical demolition details.
2. New sign post shall be the same location as the existing.
3. Temporary sign shall be set up and operational before the demolition of sign.
4. See Sht S5.12 for the details of the restoration of concrete barrier.
5. The Contractor shall be cautious with the overhead HECO lines during the construction. Notify HECO prior to beginning work.

SIGN 78EBR-822
DEMOLITION DETAIL - ELEVATION

1
S3.8 | S3.8

Scale: 1/8" = 1'-0"

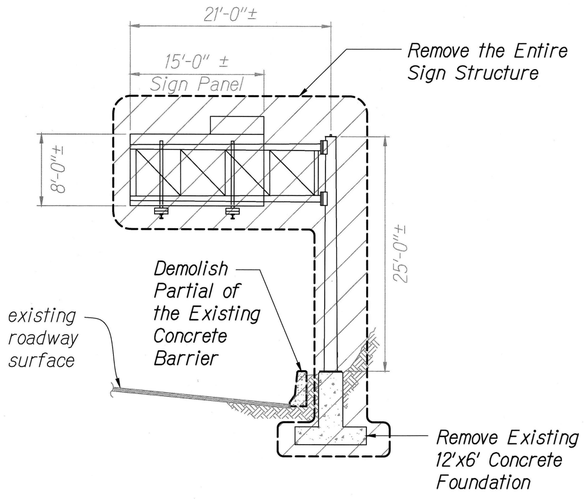

FRONT ELEVATION

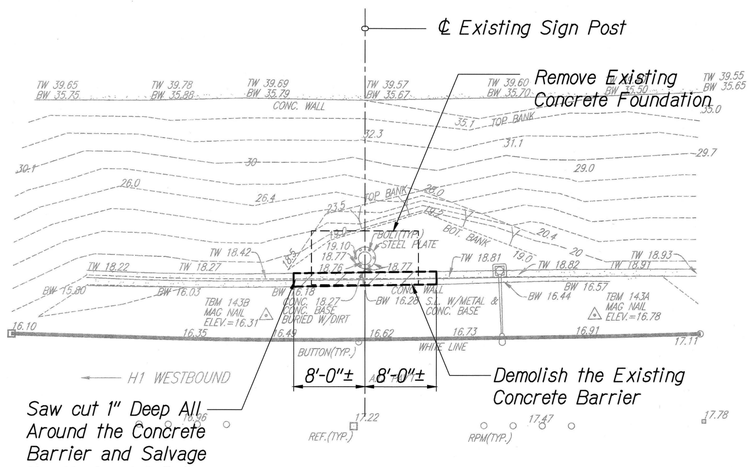

Notes:
1. See Sht E3.8 Electrical demolition details.
2. New sign post shall be the same location as the existing.
3. See Sht S5.12 for the details of the restoration of conc barrier

SIGN 78WB-851
DEMOLITION DETAIL - ELEVATION

2
S3.8 | S3.8

Scale: 1/8" = 1'-0"

Legend:

Demolition Area

KEN KAZUO HAYASHIDA
LICENSED PROFESSIONAL ENGINEER
No. 6818-S
HAWAII, U.S.A.

EXPIRATION DATE OF THE LICENSE 4/30/2018
THIS WORK WAS PREPARED BY ME OR UNDER MY SUPERVISION

STATE OF HAWAII
DEPARTMENT OF TRANSPORTATION
HIGHWAYS DIVISION

DEMOLITION PLAN - 5

INTERSTATE ROUTE H-1, H-2 AND H201
DESTINATION SIGN UPGRADE / REPLACEMENT, PHASE 2
Federal Aid Project NO. - NH-IM-0300(142)

Scale: As Shown Date: May 2016

SHEET No. S3.8 OF 191 SHEETS

P:\Drafting\2016-07-21_2239 Dot H1 H2 Signs Phase 2\13_2239_S3-4_S3-9.dwg, 10/6/2016 7:32:58 AM, tamahana

FED. ROAD DIST. NO.	STATE	FED. AID PROJ. NO.	FISCAL YEAR	SHEET NO.	TOTAL SHEETS
HAWAII	HAW.	NH-IM-0300(142)	2016	28	191

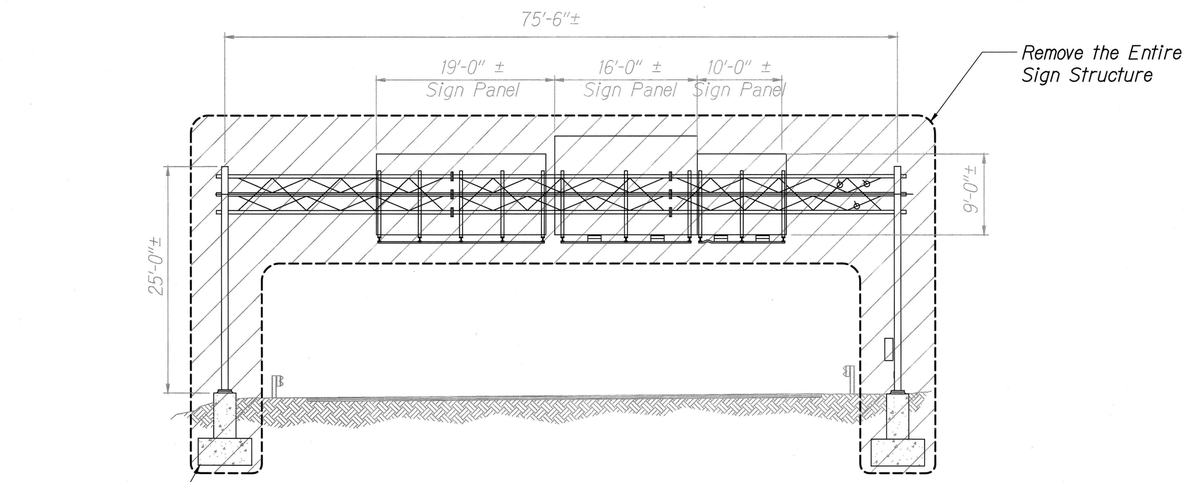

SIGN 78WBR-871
DEMOLITION DETAIL - ELEVATION

Scale: 1/8" = 1'-0"

1
S3.9 | S3.9

Notes:
1. See Sht E3.10 Electrical demolition details.
2. New sign post shall be the same location as the existing.
3. Temporary sign shall be set up and operational before demolition of sign.

Legend:

Demolition Area

KEN KATUO HAYASHIDA
LICENSED PROFESSIONAL ENGINEER
No. 6818-S
HAWAII, U.S.A.

EXPIRATION DATE OF THE LICENSE 4/30/2018
THIS WORK WAS PREPARED BY ME OR UNDER MY SUPERVISION

STATE OF HAWAII
DEPARTMENT OF TRANSPORTATION
HIGHWAYS DIVISION

DEMOLITION PLAN - 6

INTERSTATE ROUTE H-1, H-2 AND H201
DESTINATION SIGN UPGRADE / REPLACEMENT, PHASE 2
Federal Aid Project NO. - NH-IM-0300(142)

Scale: As Shown Date: May 2016

SHEET No. S3.9 OF 191 SHEETS

P:\Drafting\2016-07-21_2239 Dot H1 H2 Signs Phase 2\13_2239_S3-4_S3-9.dwg, 10/6/2016 7:32:59 AM, tamanaha

FED. ROAD DIST. NO.	STATE	FED. AID PROJ. NO.	FISCAL YEAR	SHEET NO.	TOTAL SHEETS
HAWAII	HAW.	NH-IM-0300(142)	2016	29	191

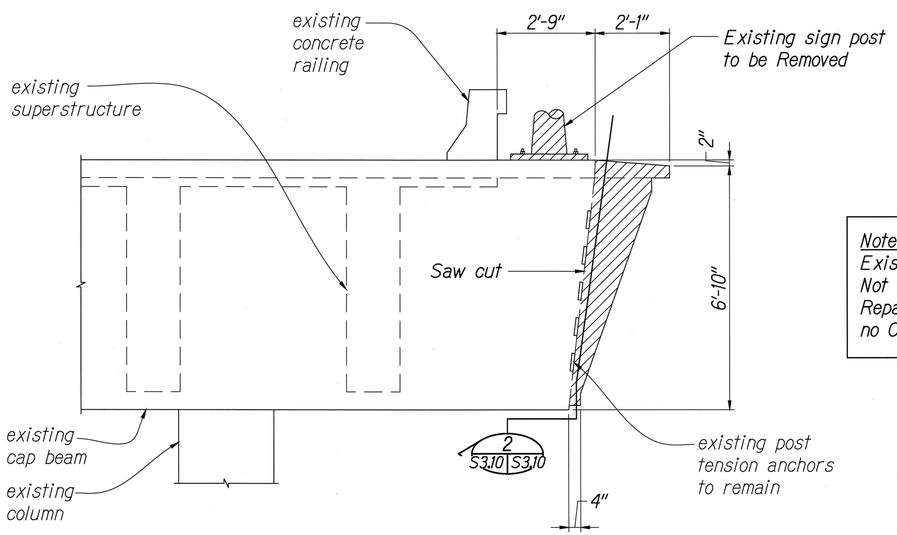

H1WB-402 SIGN STRUCTURE DEMOLITION ELEVATION 1 S3.10 S3.10

Scale: 1/2" = 1'-0"

Note:
Existing post tension anchors Shall Not be Damaged. Contractor to Repair any Damage to anchors at no Cost to the State.

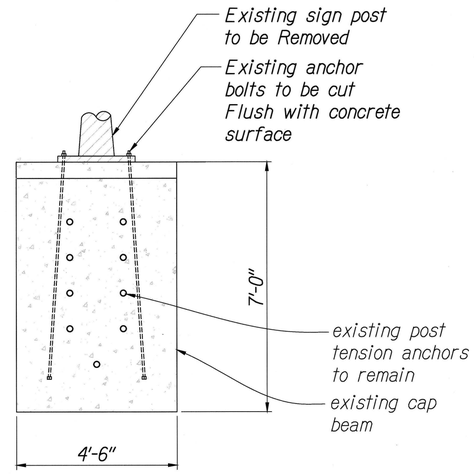

SECTION 2 S3.10 S3.10

Scale: 1/2" = 1'-0"

Legend:

Demolition Area

KEN KAZUO HAYASHIDA
LICENSED PROFESSIONAL ENGINEER
No. 6818-S
HAWAII, U.S.A.

EXPIRATION DATE OF THE LICENSE 4/30/2018
THIS WORK WAS PREPARED BY ME OR UNDER MY SUPERVISION

STATE OF HAWAII
DEPARTMENT OF TRANSPORTATION
HIGHWAYS DIVISION

DEMOLITION DETAILS

INTERSTATE ROUTE H-1, H-2 AND H201
DESTINATION SIGN UPGRADE / REPLACEMENT, PHASE 2
Federal Aid Project NO. - NH-IM-0300(142)

Scale: As Shown Date: May 2016

SHEET No. S3.10 OF 191 SHEETS

P:\Drafting\2016-07-21_2239 Dot H1 H2 Signs Phase 2\14_2239_S3-10.dwg, 10/6/2016 7:33:01 AM, tamanaha

FED. ROAD DIST. NO.	STATE	FED. AID PROJ. NO.	FISCAL YEAR	SHEET NO.	TOTAL SHEETS
HAWAII	HAW.	NH-IM-0300(142)	2016	30	191

Construction Sequence:

1. Installation of traffic control.
2. Installation of site specific BMP.
3. Remove entire existing sign structure.
4. Remove existing concrete pedestal and portion of the existing pier cap.
5. Build up existing pier cap and construct new concrete pedestal.
6. Erection of new sign structure and sign panel.
7. Remove site specific BMP.
8. Remove traffic control.

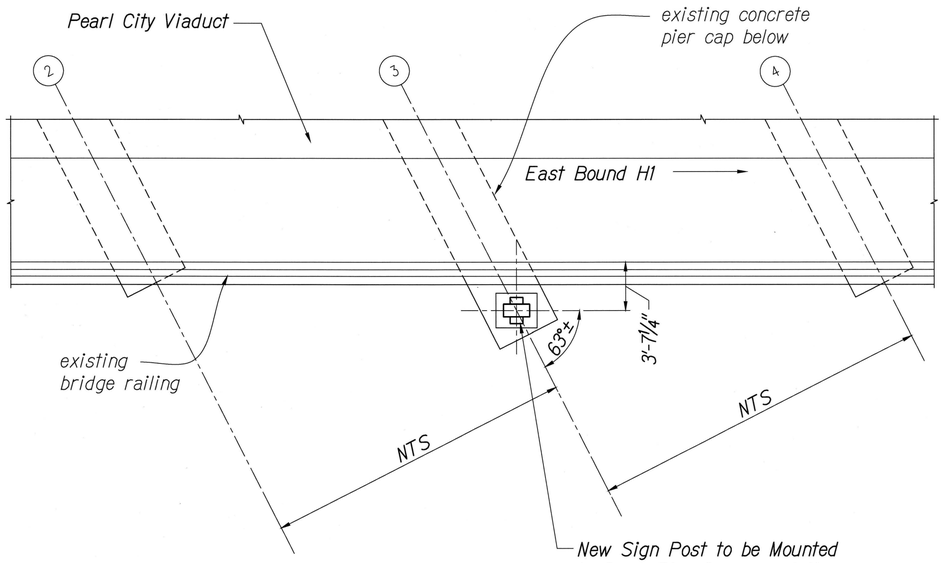

Legend:

(4) *Indicates pier number, referenced to as-built drawings*

H1EB-112 - FOUNDATION PLAN

Scale: 3/16" = 1'-0"

2 S4.1 S4.1

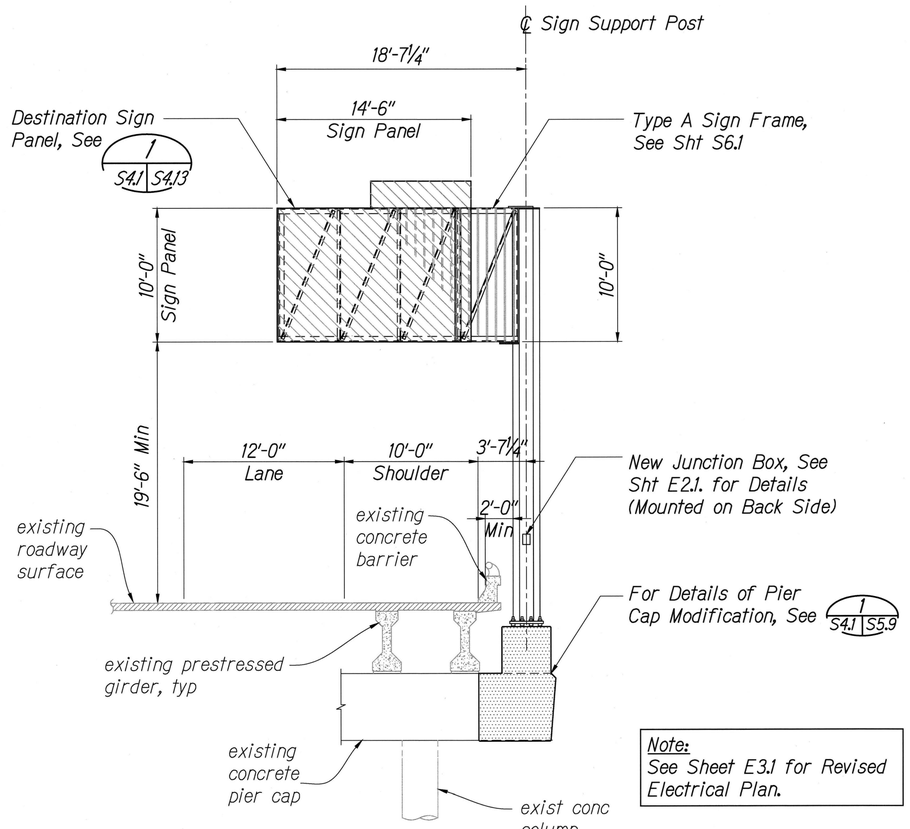

Note:
See Sheet E3.1 for Revised Electrical Plan.

H1EB-112 - ELEVATION

Scale: 3/16" = 1'-0"

1 S4.1 S4.1

Notes:

1. At least one sign among H1EB-112, H1EB-113 and H1EB-114 shall be in-place and fully functional during the time of construction. The construction work shall be staged so that not all three signs be removed during the same time period.
2. The Contractor shall notify the property owner/tenant of the impending construction work that will be occurring above their property. The Contractor shall coordinate with property owener/tenant in advance and cordon off a 15' radius area beneath the pier cap being worked on to protect persons from falling debris. The Contractor shall clean all debris from private property when work is complete.
3. The Contractor shall limit the construction time to within 60 calendar days.
4. The top of concrete pier cap is elevated 20.5'± from the grade below.

KEN KAZUO HAYASHIDA LICENSED PROFESSIONAL ENGINEER No. 6818-S HAWAII, U.S.A.

EXPIRATION DATE OF THE LICENSE 4/30/2018

THIS WORK WAS PREPARED BY ME OR UNDER MY SUPERVISION

STATE OF HAWAII
DEPARTMENT OF TRANSPORTATION
HIGHWAYS DIVISION

SIGN H1EB-112 GENERAL ARRANGEMENT

INTERSTATE ROUTE H-1, H-2 AND H201
DESTINATION SIGN UPGRADE / REPLACEMENT, PHASE 2
Federal Aid Project NO. - NH-IM-0300(142)

Scale: As Shown Date: May 2016

SHEET No. S4.1 OF 191 SHEETS

P:\Drafting\2016-07-21_2239 Dot H1 H2 Signs Phase 2\15_2239_S4-1 thru S4-12.dwg, 10/6/2016 7:33:04 AM, tamanaha

FED. ROAD DIST. NO.	STATE	FED. AID PROJ. NO.	FISCAL YEAR	SHEET NO.	TOTAL SHEETS
HAWAII	HAW.	NH-1M-0300(142)	2016	31	191

Construction Sequence:

1. Installation of traffic control.
2. Installation of site specific BMP.
3. Remove entire existing sign structure.
4. Remove existing concrete pedestal and portion of the existing pier cap.
5. Build up existing pier cap and construct new concrete pedestal.
6. Erection of new sign structure and sign panel.
7. Remove site specific BMP.
8. Remove traffic control.

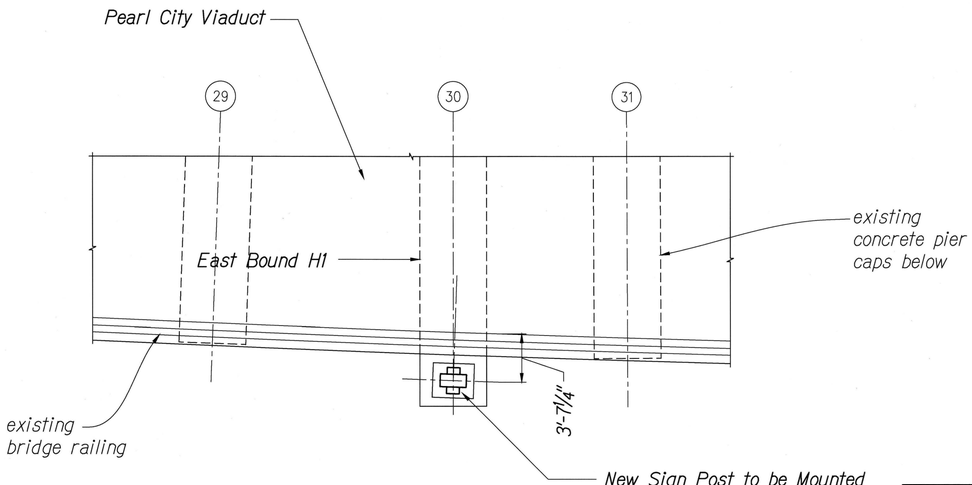

H1EB-113 - FOUNDATION PLAN 2 S4.2 S4.2
Scale: 3/16" = 1'-0"

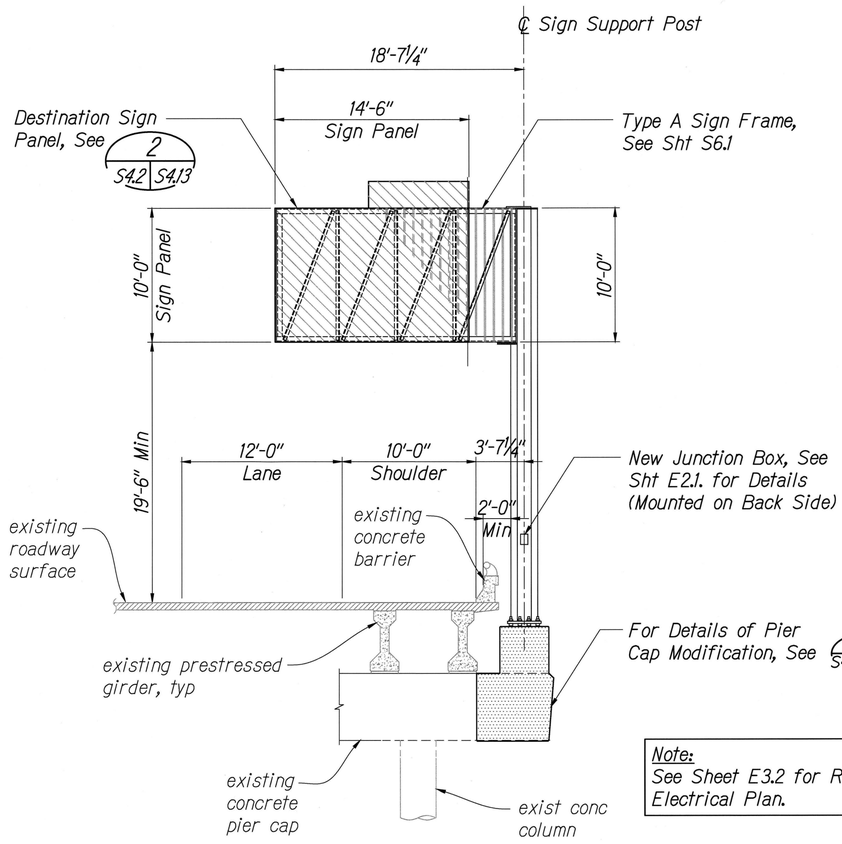

Note:
See Sheet E3.2 for Revised Electrical Plan.

H1EB-113 - ELEVATION 1 S4.2 S4.2
Scale: 3/16" = 1'-0"

Legend:

(29) Indicates pier number, referenced to as-built drawings

Notes:

1. At least one sign among H1EB-112, H1EB-113 and H1EB-114 shall be in-place and fully functional during the time of construction. The construction work shall be staged so that not all three signs be removed during the same time period.
2. The Contractor shall notify the property owner/tenant of the impending construction work that will be occurring above their property. The Contractor shall coordinate with property owener/tenant in advance and cordon off a 15' radius area beneath the pier cap being worked on to protect persons from falling debris. The Contractor shall clean all debris from private property when work is complete.
3. The Contractor shall limit the construction time to within 60 calendar days.
4. The top of concrete pier cap is elevated 20.5'± from the grade below.

KEN KAZUO HAYASHIDA LICENSED PROFESSIONAL ENGINEER No. 6818-S HAWAII, U.S.A.

EXPIRATION DATE OF THE LICENSE 4/30/2018
THIS WORK WAS PREPARED BY ME OR UNDER MY SUPERVISION

STATE OF HAWAII
DEPARTMENT OF TRANSPORTATION
HIGHWAYS DIVISION

SIGN H1EB-113 GENERAL ARRANGEMENT

INTERSTATE ROUTE H-1, H-2 AND H201
DESTINATION SIGN UPGRADE / REPLACEMENT, PHASE 2
Federal Aid Project NO. - NH-IM-0300(142)
Scale: As Shown Date: May 2016

SHEET No. S4.2 OF 191 SHEETS

P:\Drafting\2016-07-21_2239 Dot H1 H2 Signs Phase 2\15_2239_S4-1 thru S4-12.dwg, 10/6/2016 7:33:05 AM, tamanaha

FED. ROAD DIST. NO.	STATE	FED. AID PROJ. NO.	FISCAL YEAR	SHEET NO.	TOTAL SHEETS
HAWAII	HAW.	NH-1M-0300(142)	2016	32	191

HECO COORDINATION NOTES FOR SIGN H1EB-114:

1. Access to the HECO yard will be allowed for the Contractor to stage their construction work. An area up to 50' x 50' below the viaduct pilecap will be provided to the Contractor for a work area during the construction phase of sign H1EB-114. The Contractor shall coordinate with the HECO point of contact for determining what activities will be allowed on HECO property.
2. The Contractor shall coordinate with HECO at least 30 days prior to beginning work on sign H1EB-114. The point of contact at HECO is the following:
   FELIX ESTRELLA
   CELL PHONE: (808) 864-0997
   OFFICE PHONE: (808) 543-4060
   FELIX.ESTRELLA@HAWAIIANELECTRIC.COM
3. The Contractor will be required to submit the names and pertinent information of all personnel who will be accessing HECO property. HECO will conduct a background check on all Contractor personnel and will issue access passes to those personnel that are approved to work on HECO property.
4. Night work on HECO property is preferred instead of daytime work.

Construction Sequence:
1. Installation of traffic control.
2. Installation of site specific BMP.
3. Remove entire existing sign structure.
4. Remove existing concrete pedestal and portion of existing pier cap.
5. Build up existing pier cap and construct new concrete pedestal.
6. Erection of new sign structure and sign panel.
7. Remove site specific BMP.
8. Remove traffic control.

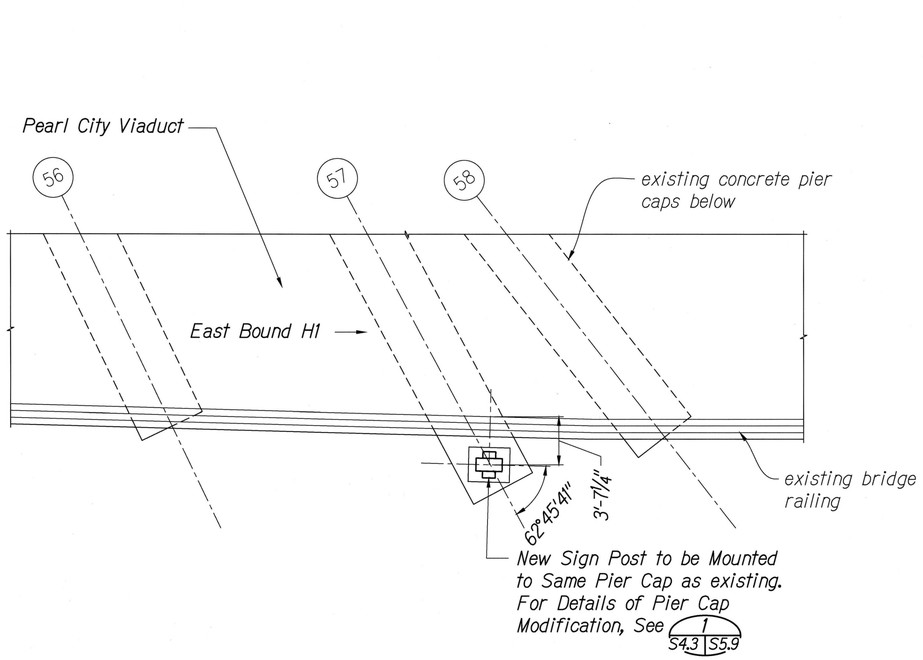

H1EB-114 - FOUNDATION PLAN
Scale: 3/16" = 1'-0"
2 S4.3 S4.3

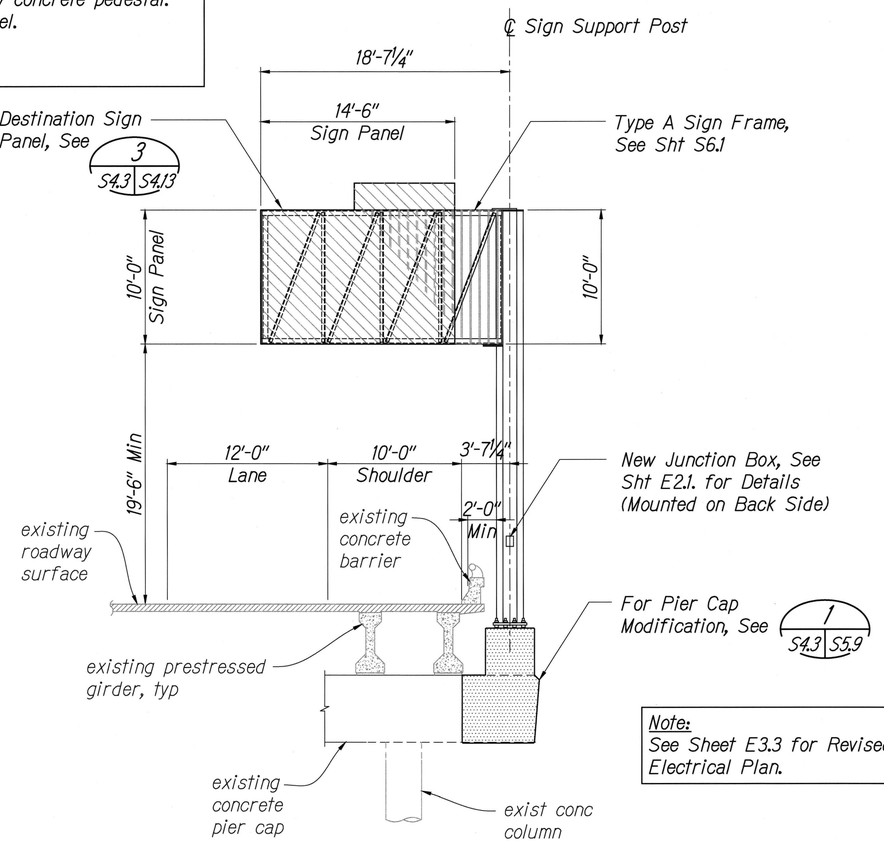

H1EB-114 - ELEVATION
Scale: 3/16" = 1'-0"
1 S4.3 S4.3

Note:
See Sheet E3.3 for Revised Electrical Plan.

Legend:
(56) Indicates pier number, referenced to as-built drawings

Notes:
1. At least one sign among H1EB-112, H1EB-113 and H1EB-114 shall be in-place and fully functional during the time of construction. The construction work shall be staged so that not all three signs be removed during the same time period.
2. The Contractor shall notify the property owner/tenant of the impending construction work that will be occurring above their property. The Contractor shall coordinate with property owener/tenant in advance and cordon off a 15' radius area beneath the pier cap being worked on to protect persons from falling debris. The Contractor shall clean all debris from private property when work is complete.
3. The Contractor shall limit the construction time to within 60 calendar days.
4. The top of concrete pier cap is elevated 20.5'± from the grade below.

KEN KAZUO HAYASHIDA
LICENSED PROFESSIONAL ENGINEER
No. 6818-S
HAWAII, U.S.A.

EXPIRATION DATE OF THE LICENSE 4/30/2018
THIS WORK WAS PREPARED BY ME OR UNDER MY SUPERVISION

STATE OF HAWAII
DEPARTMENT OF TRANSPORTATION
HIGHWAYS DIVISION

SIGN H1EB-114 GENERAL ARRANGEMENT

INTERSTATE ROUTE H-1, H-2 AND H201
DESTINATION SIGN UPGRADE / REPLACEMENT, PHASE 2
Federal Aid Project NO. - NH-IM-0300(142)
Scale: As Shown Date: May 2016

SHEET No. S4.3 OF 191 SHEETS

P:\Drafting\2016-07-21_2239 Dot H1 H2 Signs Phase 2\15_2239_S4-1 thru S4-12.dwg, 10/6/2016 7:33:05 AM, tamanaha

FED. ROAD DIST. NO.	STATE	FED. AID PROJ. NO.	FISCAL YEAR	SHEET NO.	TOTAL SHEETS
HAWAII	HAW.	NH-1M-0300(142)	2016	33	191

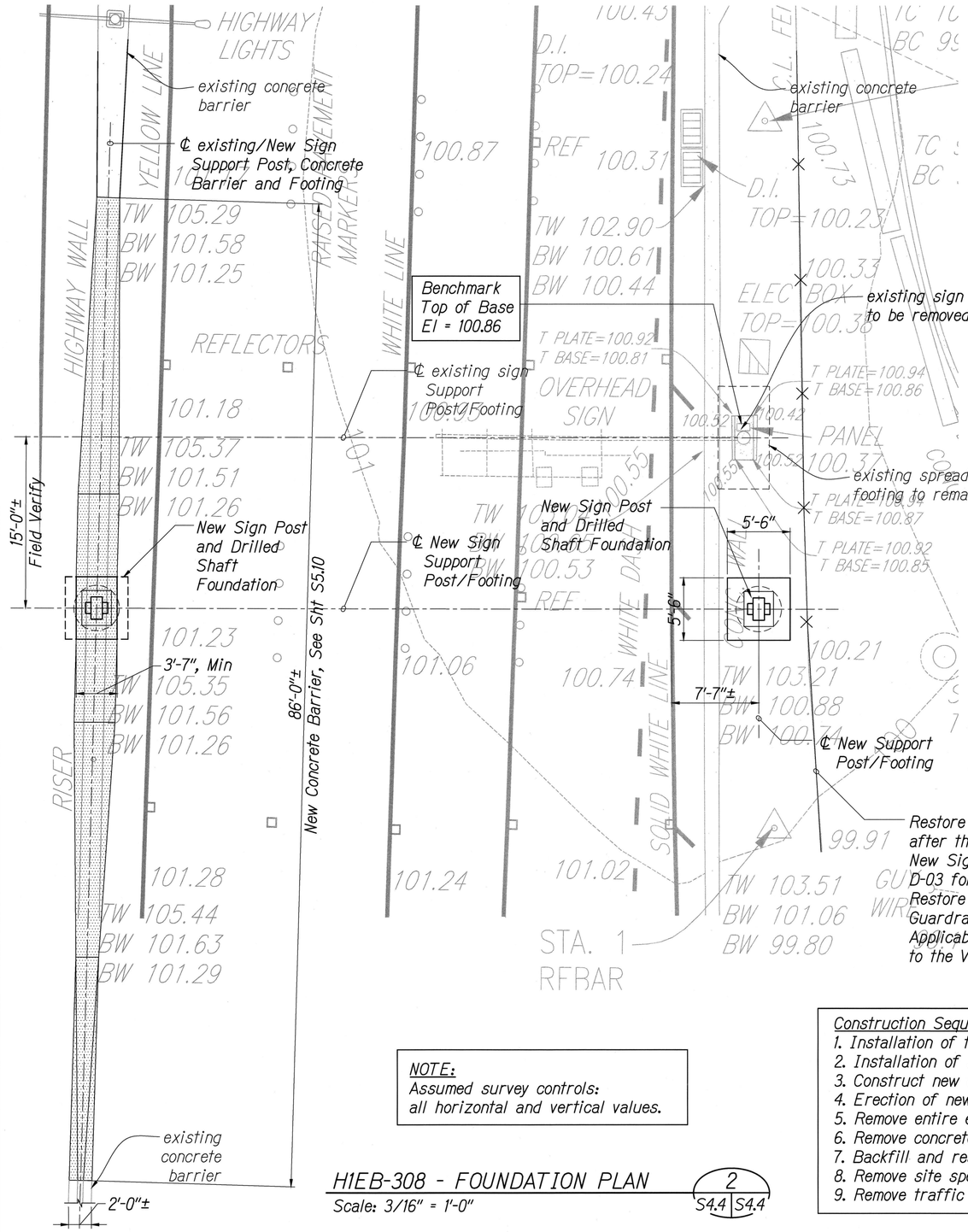

H1EB-308 - FOUNDATION PLAN (2 / S4.4 | S4.4)
Scale: 3/16" = 1'-0"

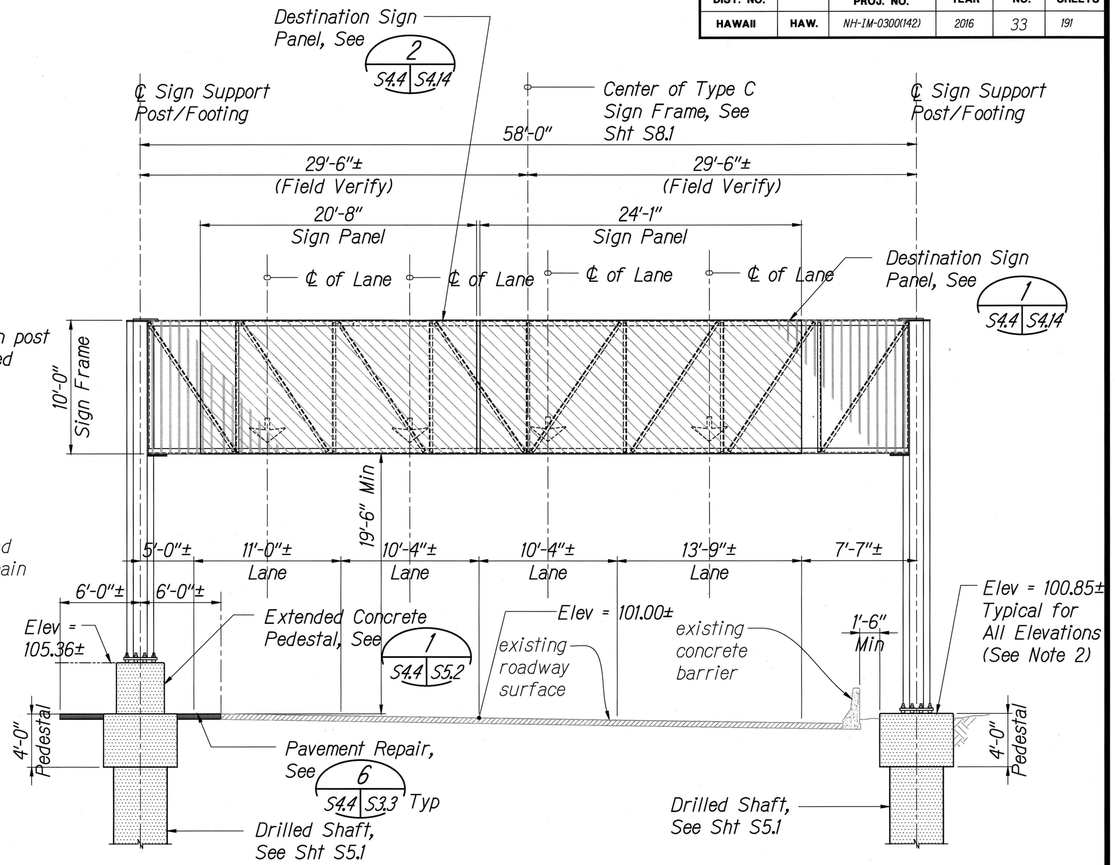

H1EB-308 - ELEVATION (1 / S4.4 | S4.4)
Scale: 3/16" = 1'-0"

Notes:
1. See Sheet E3.4 for Revised Electrical plan and HECO existing underground facilities.
2. Top of concrete pedestal shall be at least 4", but no more than 6" above existing highest grade.
3. New Median Barrier shall not interfere the existing light pole and its support.

NOTE:
Assumed survey controls:
all horizontal and vertical values.

Construction Sequence:
1. Installation of traffic control.
2. Installation of site specific BMP.
3. Construct new drilled shaft foundation.
4. Erection of new sign structure and sign panel.
5. Remove entire existing sign structure.
6. Remove concrete foundation to 1'-0" below the existing grade.
7. Backfill and restore disturbed grade to original condition.
8. Remove site specific BMP.
9. Remove traffic control.

KEN KAZUO HAYASHIDA
LICENSED PROFESSIONAL ENGINEER
No. 6818-S
HAWAII, U.S.A.

EXPIRATION DATE OF THE LICENSE 4/30/2018
THIS WORK WAS PREPARED BY ME OR UNDER MY SUPERVISION

STATE OF HAWAII
DEPARTMENT OF TRANSPORTATION
HIGHWAYS DIVISION

SIGN H1EB-308 GENERAL ARRANGEMENT

INTERSTATE ROUTE H-1, H-2 AND H201
DESTINATION SIGN UPGRADE / REPLACEMENT, PHASE 2
Federal Aid Project NO. - NH-IM-0300(142)
Scale: As Shown Date: May 2016

SHEET No. S4.4 OF 191 SHEETS

P:\Drafting\2016-07-21_2239 Dot H1 H2 Signs Phase 2\15_2239_S4-1 thru S4-12.dwg, 10/6/2016 7:33:06 AM, tamanaha

FED. ROAD DIST. NO.	STATE	FED. AID PROJ. NO.	FISCAL YEAR	SHEET NO.	TOTAL SHEETS
HAWAII	HAW.	NH-IM-0300(142)	2016	34	191

Construction Sequence:

1. Installation of traffic control.
2. Set up temporary sign.
3. Installation of site specific BMP.
4. Remove entire existing sign structure.
5. Remove existing concrete pedestal.
6. Build up existing pier cap and construct new concrete pedestal.
7. Erection of new sign structure and sign panel.
8. Remove site specific BMP.
9. Remove traffic control.

Notes:

1. The Contractor shall notify the property owner/tenant of the impending construction work that will be occurring above their property. The Contractor shall coordinate with property owener/tenant in advance and cordon off a 15' radius area beneath the pier cap being worked on to protect persons from falling debris. The Contractor shall clean all debris from private property when work is complete.
2. The Contractor shall limit the construction time to within 60 calendar days.
3. Contractor to keep driveway into cemetery clear and open to traffic.
4. Reinstall downspout if its removal is necessary during construction.
5. The top of concrete pier cap is elevated 30.0± from the grade below.

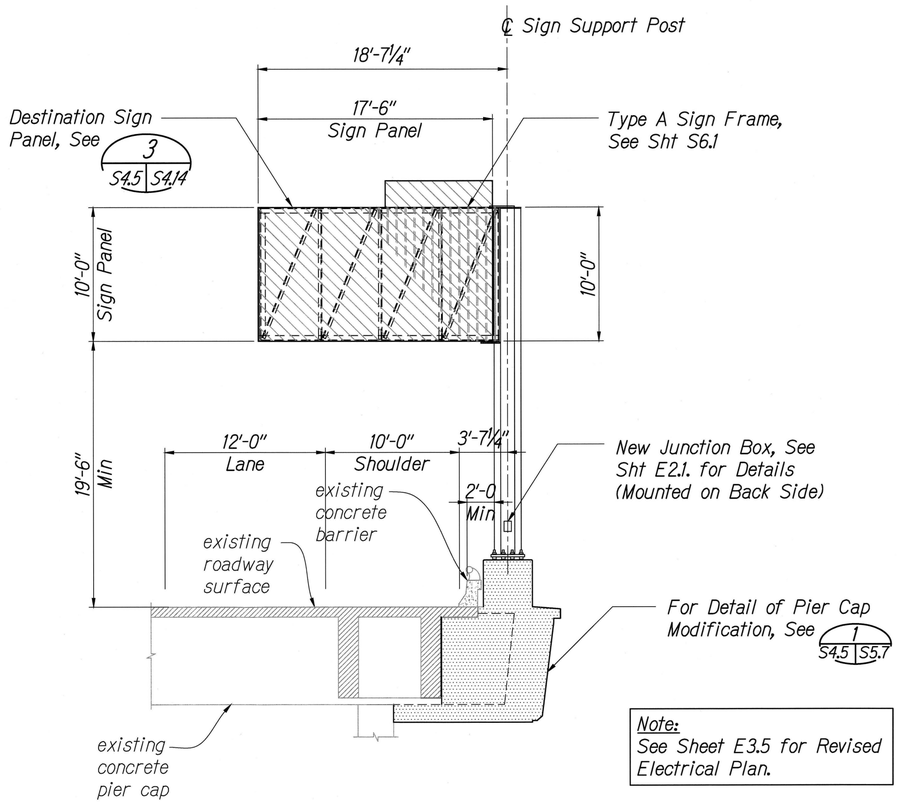

Note:
See Sheet E3.5 for Revised Electrical Plan.

H1WB-402 - ELEVATION 1 S4.5 S4.5
Scale: 3/16" = 1'-0"

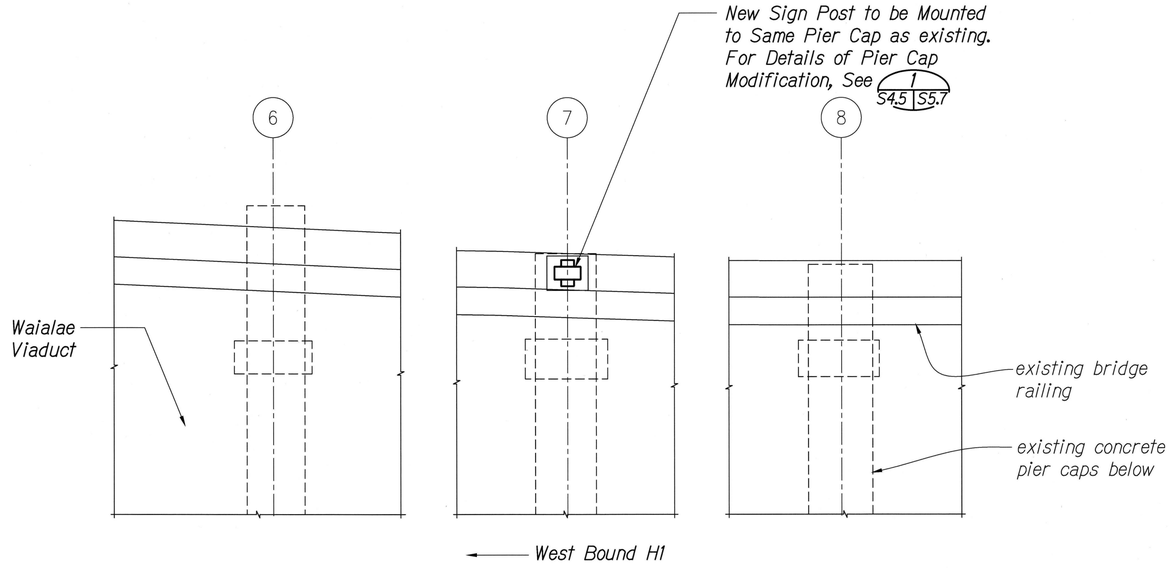

H1WB-402 - FOUNDATION PLAN 2 S4.5 S4.5
Scale: 3/16" = 1'-0"

Legend:

(4) Indicates pier number, referenced to as-built drawings

KEM KAZUO HAYASHIDA
LICENSED PROFESSIONAL ENGINEER
No. 6818-S
HAWAII, U.S.A.

EXPIRATION DATE OF THIS LICENSE 4/30/2018
THIS WORK WAS PREPARED BY ME OR UNDER MY SUPERVISION

STATE OF HAWAII
DEPARTMENT OF TRANSPORTATION
HIGHWAYS DIVISION

SIGN H1WB-402 GENERAL ARRANGEMENT

INTERSTATE ROUTE H-1, H-2 AND H201
DESTINATION SIGN UPGRADE / REPLACEMENT, PHASE 2
Federal Aid Project NO. - NH-IM-0300(142)
Scale: As Shown Date: May 2016

SHEET No. S4.5 OF 191 SHEETS

P:\Drafting\2016-07-21_2239 Dot H1 Hi2 Signs Phase 2\15_2239_S4-1 thru S4-12.dwg, 10/6/2016 7:33:07 AM, tamahana

FED. ROAD DIST. NO.	STATE	FED. AID PROJ. NO.	FISCAL YEAR	SHEET NO.	TOTAL SHEETS
HAWAII	HAW.	NH-IM-0300(142)	2016	35	191

Construction Sequence:

1. Installation of traffic control.
2. Set up temporary sign.
3. Installation of site specific BMP.
4. Remove existing guardrail temporarily.
5. Remove entire existing sign structure.
6. Remove existing concrete foundation.
7. Construct new concrete spread footing.
8. Erection of new sign structure and sign panel.
9. Backfill and restore disturbed grade to original condition.
10. Reset guardrail.
11. Remove site specific BMP.
12. Remove traffic control.

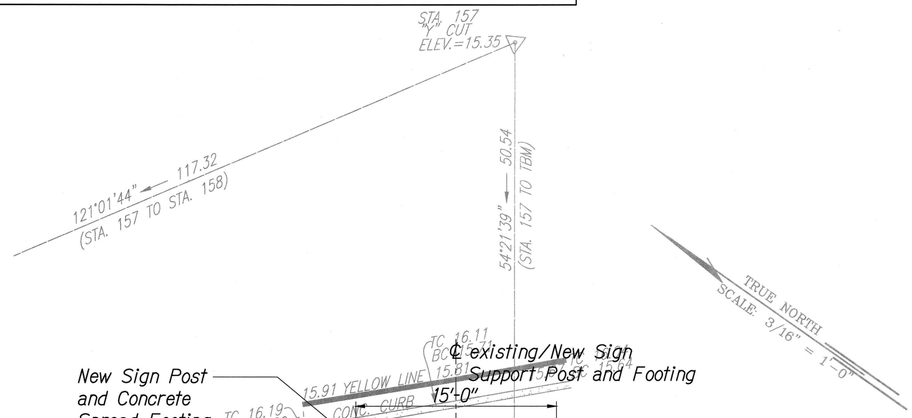

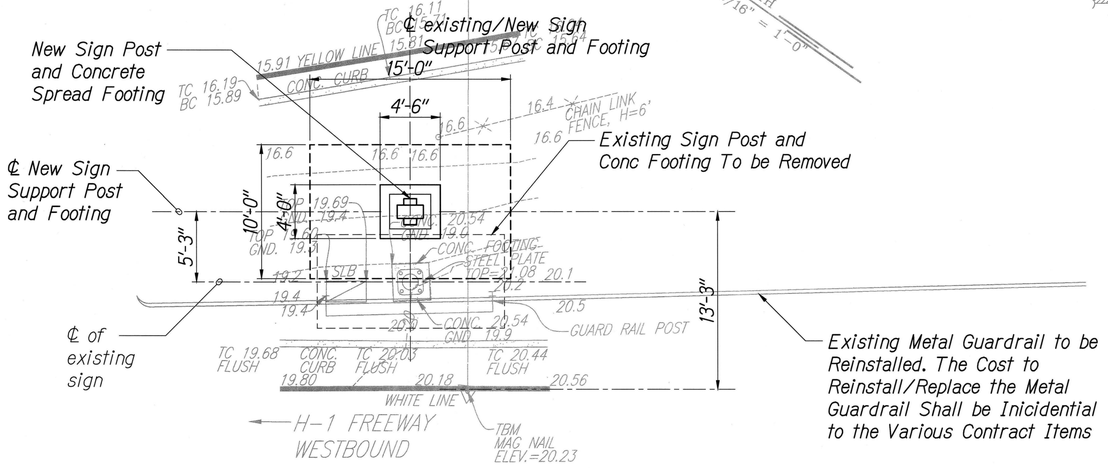

H1WB-418 - FOUNDATION PLAN (2 / S4.6 | S4.6)
Scale: 3/16" = 1'-0"

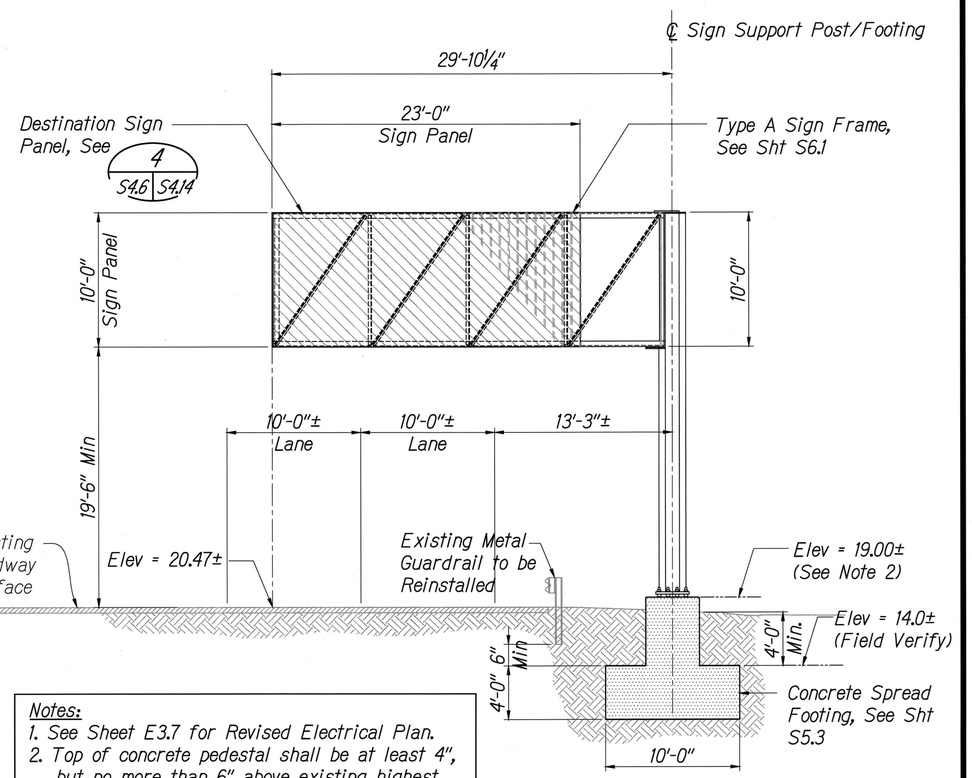

Notes:
1. See Sheet E3.7 for Revised Electrical Plan.
2. Top of concrete pedestal shall be at least 4", but no more than 6" above existing highest grade. Contractor to regrade around pedestal to accommodate clearance requirement.

H1WB-418 - ELEVATION (1 / S4.6 | S4.6)
Scale: 3/16" = 1'-0"

BENCHMARK
Referred to HCTC-55 (Honolulu High Capacity Transit Corridor Project)
Brass Disk
Elev. = 16.68, MSL

KEN KAZUO HAYASHIDA
LICENSED PROFESSIONAL ENGINEER
No. 6818-S
HAWAII, U.S.A.

EXPIRATION DATE OF THE LICENSE 4/30/2018
THIS WORK WAS PREPARED BY ME OR UNDER MY SUPERVISION

STATE OF HAWAII
DEPARTMENT OF TRANSPORTATION
HIGHWAYS DIVISION

SIGN H1WB-418 GENERAL ARRANGEMENT

INTERSTATE ROUTE H-1, H-2 AND H201
DESTINATION SIGN UPGRADE / REPLACEMENT, PHASE 2
Federal Aid Project NO. - NH-IM-0300(142)
Scale: As Shown Date: May 2016

SHEET No. S4.6 OF 191 SHEETS

P:\Drafting\2016-07-21_2239 Dot H1 H2 Signs Phase 2\15_2239_S4-1 thru S4-12.dwg, 10/6/2016 7:33:01 AM, tamanaha

FED. ROAD DIST. NO.	STATE	FED. AID PROJ. NO.	FISCAL YEAR	SHEET NO.	TOTAL SHEETS
HAWAII	HAW.	NH-IM-0300(142)	2016	36	191

Construction Sequence:

1. Installation of traffic control.
2. Installation of site specific BMP.
3. Demolition portion of existing concrete barrier.
4. Construct new concrete drilled shaft and pedestal.
5. Erection of new sign structure and sign panel.
6. Remove entire existing sign structure.
7. Remove concrete foundation to 1'-0" below the existing grade.
8. Restore concrete barrier and repair existing CRM slab.
9. Repair pavement.
10. Remove site specific BMP.
11. Remove traffic control.

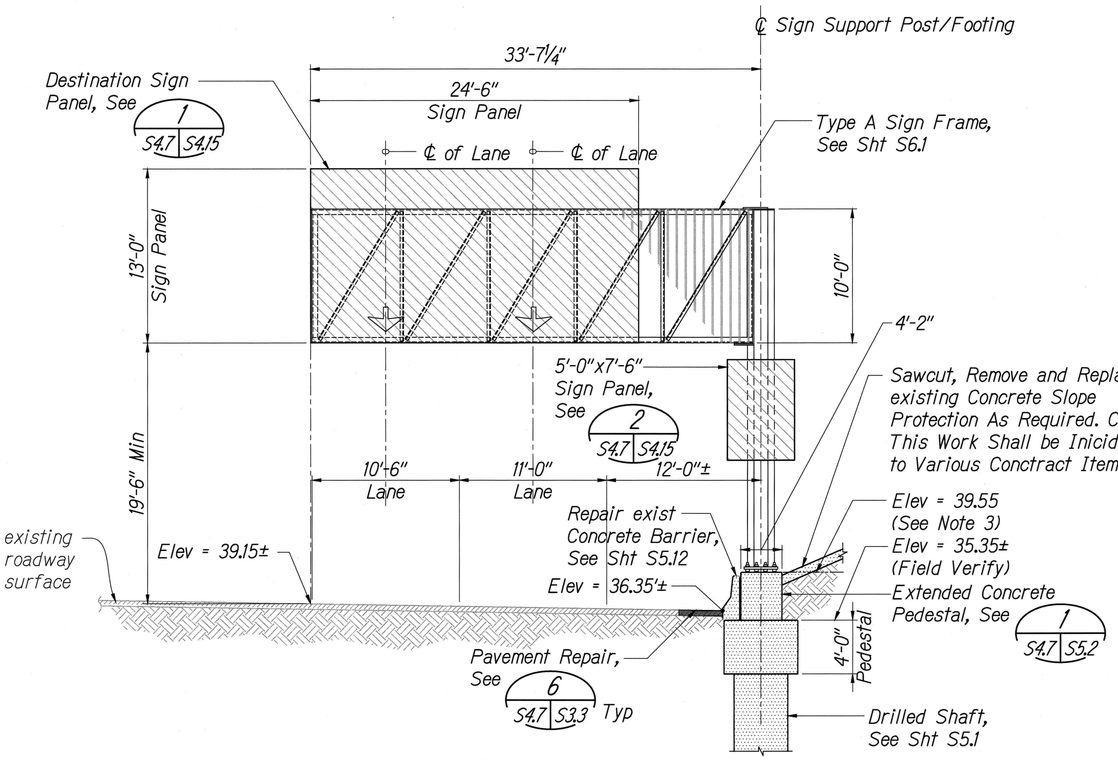

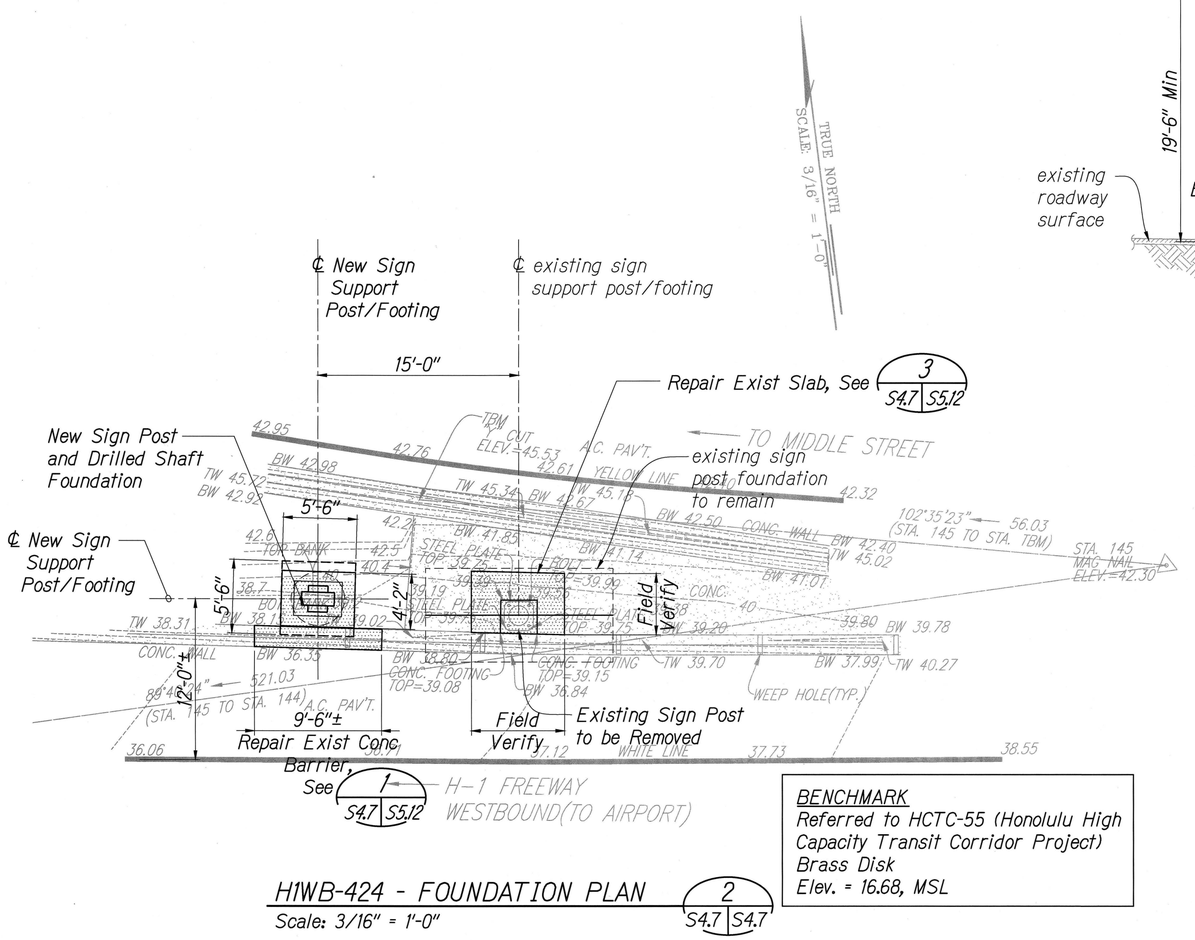

H1WB-424 - FOUNDATION PLAN 2 S4.7 S4.7

Scale: 3/16" = 1'-0"

Notes:

1. See Sheet E3.7 for Revised Electrical Plan.
2. For Sign Mounted on the Post Detail, see State STD plan TE-01 and TE-01A.
3. Top of concrete pedestal shall be at least 4", but no more than 6" above existing highest grade.
4. Rock condition is assumed for this sign location based on field observation. The contractor shall inform the Engineer immediately if otherwise is encountered during the excavation.

H1WB-424 - ELEVATION 1 S4.7 S4.7

Scale: 3/16" = 1'-0"

BENCHMARK
Referred to HCTC-55 (Honolulu High Capacity Transit Corridor Project)
Brass Disk
Elev. = 16.68, MSL

KEN KAZUO HAYASHIDA LICENSED PROFESSIONAL ENGINEER No. 6818-S HAWAII, U.S.A.

EXPIRATION DATE OF THIS LICENSE 4/30/2018
THIS WORK WAS PREPARED BY ME OR UNDER MY SUPERVISION

STATE OF HAWAII
DEPARTMENT OF TRANSPORTATION
HIGHWAYS DIVISION

SIGN H1WB-424 GENERAL ARRANGEMENT

INTERSTATE ROUTE H-1, H-2 AND H201
DESTINATION SIGN UPGRADE / REPLACEMENT, PHASE 2
Federal Aid Project NO. - NH-IM-0300(142)
Scale: As Shown Date: May 2016

SHEET No. S4.7 OF 191 SHEETS

FED. ROAD DIST. NO.	STATE	FED. AID PROJ. NO.	FISCAL YEAR	SHEET NO.	TOTAL SHEETS
HAWAII	HAW.	NH-1M-0300(142)	2016	37	191

NOTE:
Assumed survey controls:
all horizontal and vertical values.

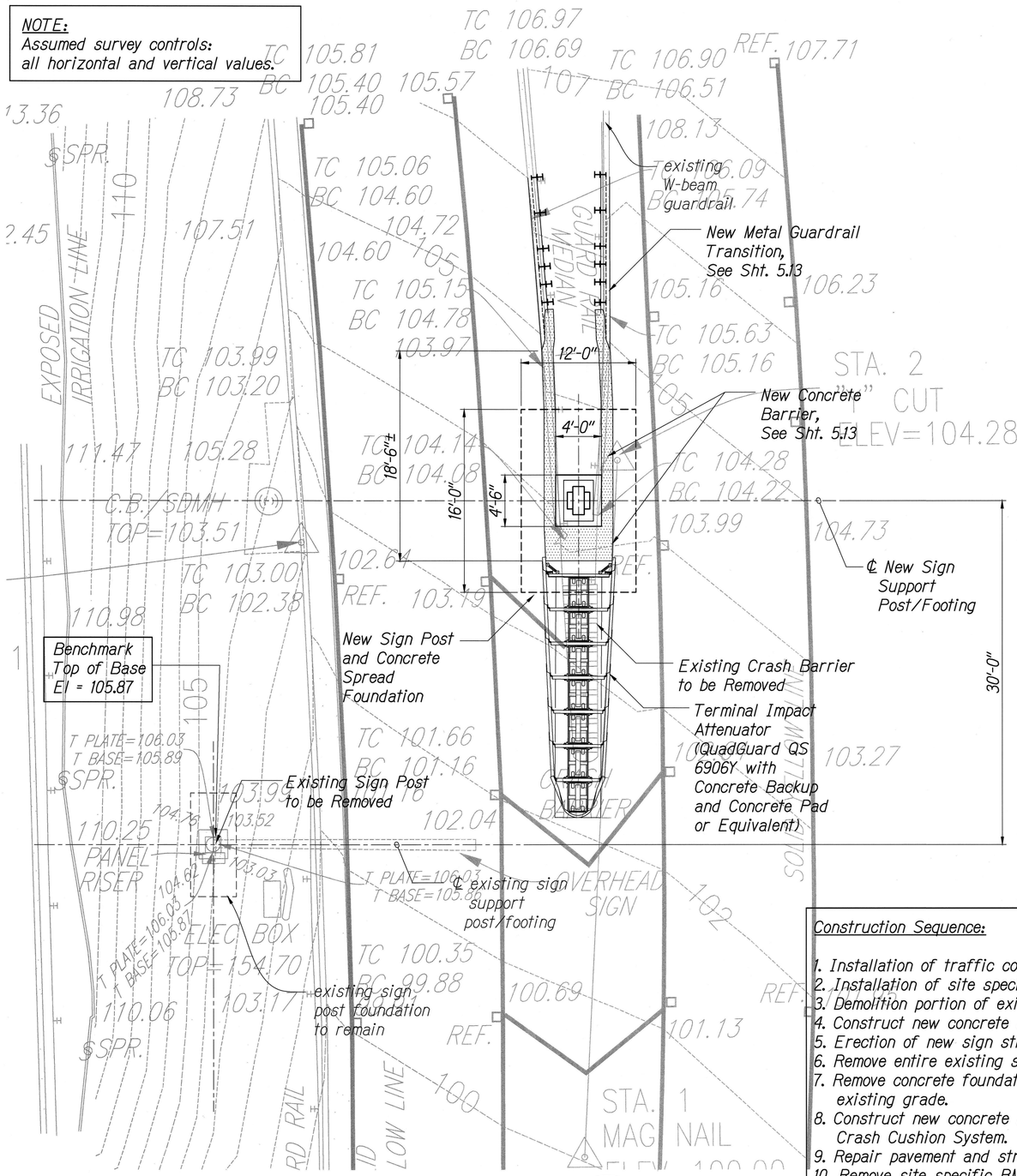

H1WBR-451 - FOUNDATION PLAN (2 / S4.8 | S4.8)
Scale: 3/16" = 1'-0"

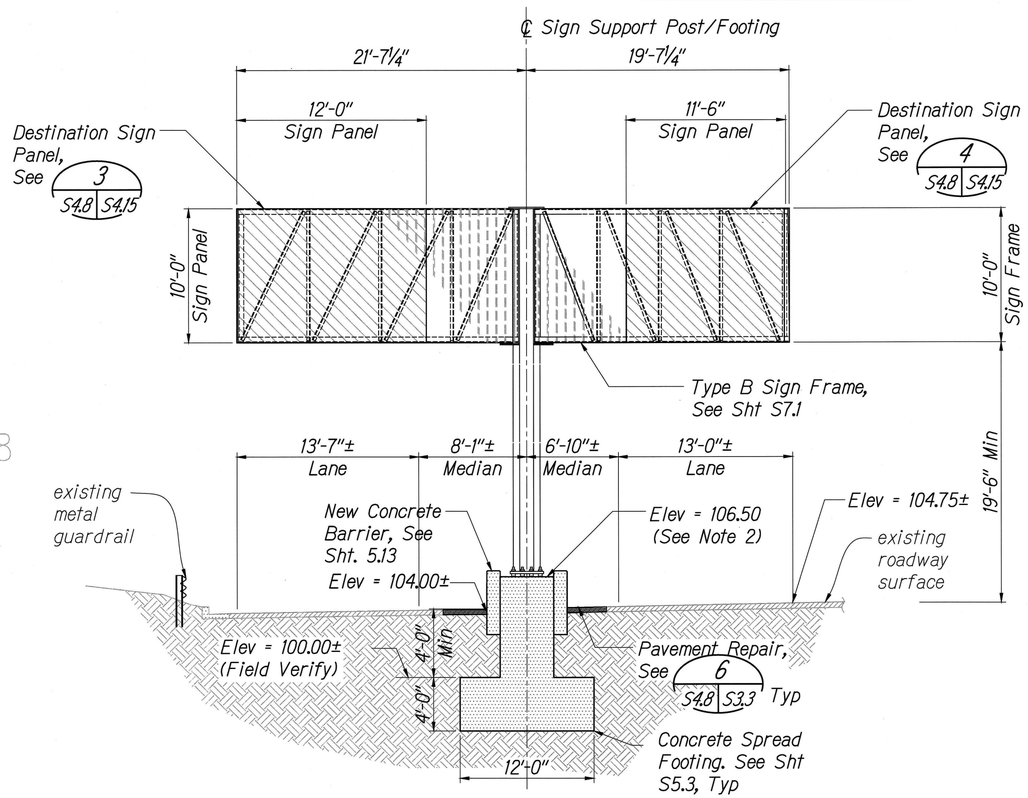

Notes:
1. See Sheet E3.6 for Revised Electrical Plan.
2. Top of concrete pedestal shall be about 4" lower than the concrete barrier.
3. The existing concrete highway structure shall not be damaged during the construction. If damage occurs, the Contractor shall inform the Engineer immediately and shall be responsible for repairing the damage at no cost to the State and to the satisfaction of the Engineer. Pre-construction survey and proper documentation (condition description, photos and etc.) are required, the cost shall be incidental to the construction of new footing and will not be paid separately.

H1WBR-451 - ELEVATION (1 / S4.8 | S4.8)
Scale: 3/16" = 1'-0"

Construction Sequence:

1. Installation of traffic control.
2. Installation of site specific BMP.
3. Demolition portion of existing median.
4. Construct new concrete spread footing.
5. Erection of new sign structure and sign panel.
6. Remove entire existing sign structure.
7. Remove concrete foundation to 1'-0" below the existing grade.
8. Construct new concrete barrier and Install Crash Cushion System.
9. Repair pavement and striping.
10. Remove site specific BMP.
11. Remove traffic control.

KEN KAZUO HAYASHIDA
LICENSED PROFESSIONAL ENGINEER
No. 6818-S
HAWAII, U.S.A.

EXPIRATION DATE OF THIS LICENSE 4/30/2018
THIS WORK WAS PREPARED BY ME OR UNDER MY SUPERVISION

STATE OF HAWAII
DEPARTMENT OF TRANSPORTATION
HIGHWAYS DIVISION

SIGN H1WBR-451 GENERAL ARRANGEMENT

INTERSTATE ROUTE H-1, H-2 AND H201
DESTINATION SIGN UPGRADE / REPLACEMENT, PHASE 2
Federal Aid Project NO. - NH-IM-0300(142)
Scale: As Shown Date: May 2016

SHEET No. S4.8 OF 191 SHEETS

P:\Drafting\2016-07-21_2239 Dot H1 H2 Signs Phase 2\15_2239_S4-1 thru S4-12.dwg, 10/6/2016 7:33:09 AM, tamanaha

FED. ROAD DIST. NO.	STATE	FED. AID PROJ. NO.	FISCAL YEAR	SHEET NO.	TOTAL SHEETS
HAWAII	HAW.	NH-IM-0300(142)	2016	38	191

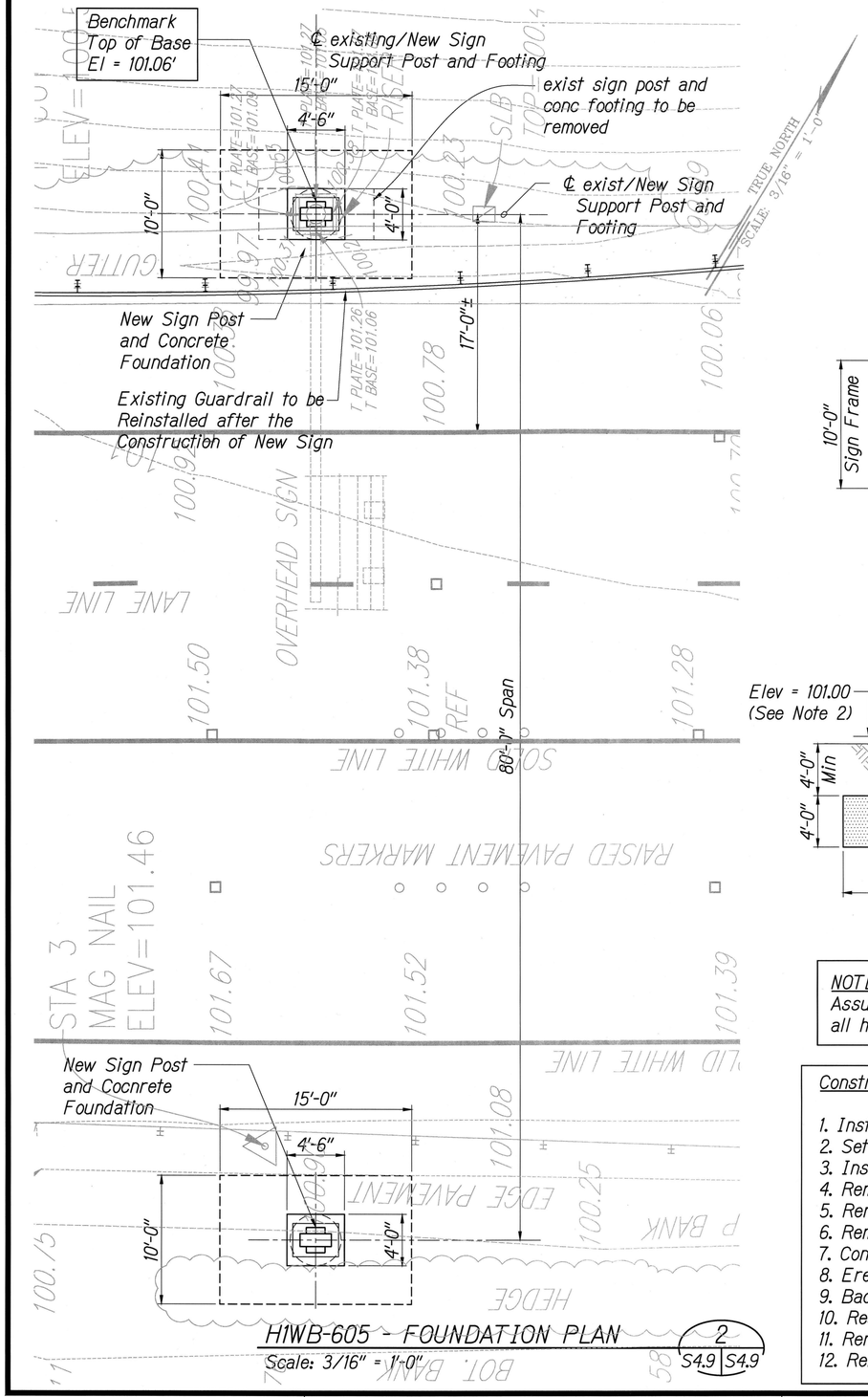

H1WB-605 - FOUNDATION PLAN (2) S4.9 | S4.9

Scale: 3/16" = 1'-0"

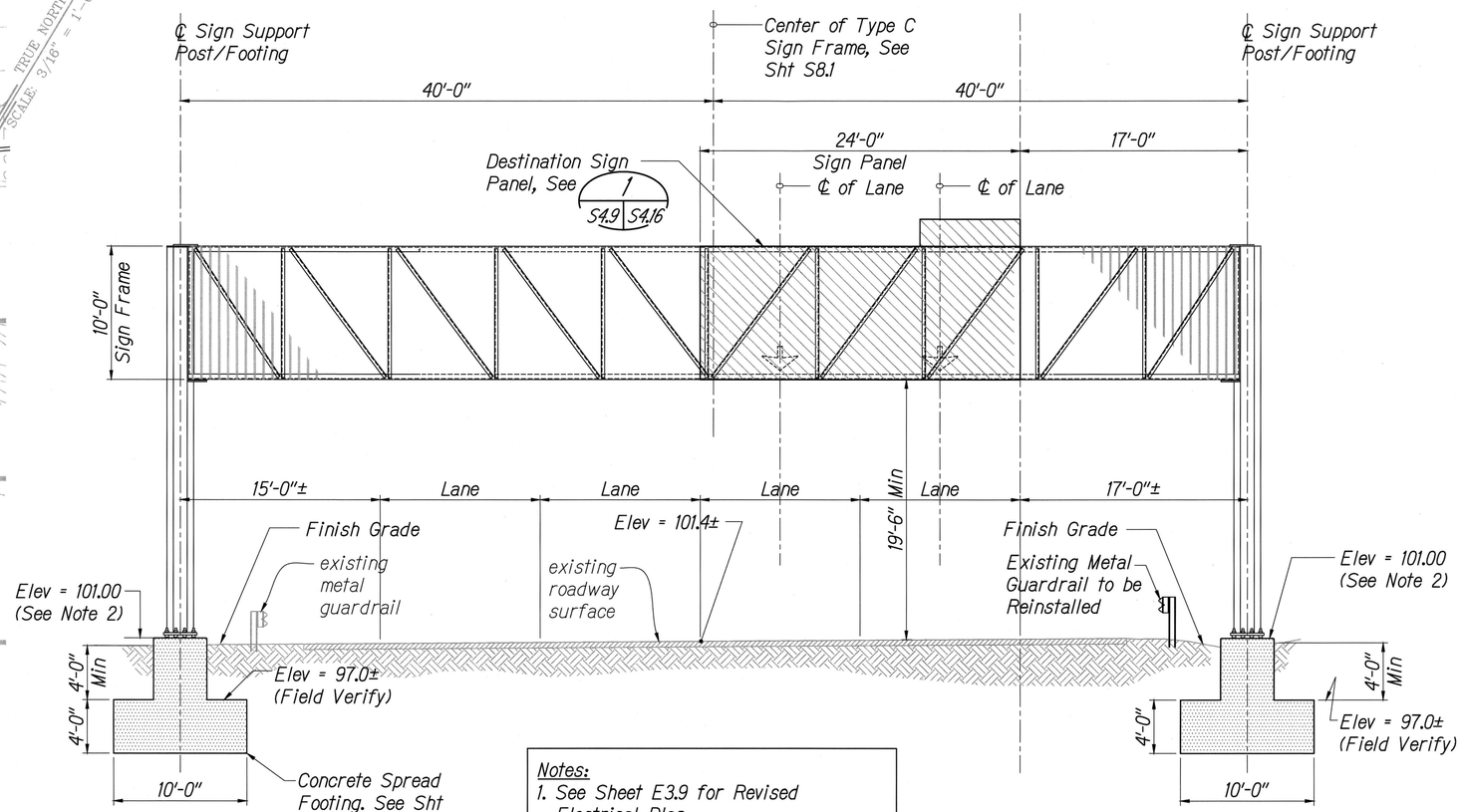

H1WB-605 - ELEVATION (1) S4.9 | S4.9

Scale: 3/16" = 1'-0"

Notes:
1. See Sheet E3.9 for Revised Electrical Plan.
2. Top of concrete pedestal shall be at least 4", but no more than 6" above existing highest grade.

NOTE:
Assumed survey controls:
all horizontal and vertical values.

Construction Sequence:

1. Installation of traffic control.
2. Set up temporary sign.
3. Installation of site specific BMP.
4. Remove existing guardrail temporarily.
5. Remove entire existing sign structure.
6. Remove existing concrete foundation.
7. Construct new concrete spread footing.
8. Erection of new sign structure and sign panel.
9. Backfill and restore disturbed grade to original condition.
10. Restore guardrail.
11. Remove site specific BMP.
12. Remove traffic control.

KEN KAZUO HAYASHIDA
LICENSED PROFESSIONAL ENGINEER
No. 6818-S
HAWAII, U.S.A.

EXPIRATION DATE OF THE LICENSE 4/30/2018
THIS WORK WAS PREPARED BY ME OR UNDER MY SUPERVISION

STATE OF HAWAII
DEPARTMENT OF TRANSPORTATION
HIGHWAYS DIVISION

SIGN H1WB-605 GENERAL ARRANGEMENT

INTERSTATE ROUTE H-1, H-2 AND H201
DESTINATION SIGN UPGRADE / REPLACEMENT, PHASE 2
Federal Aid Project NO. - NH-IM-0300(142)
Scale: As Shown Date: May 2016

SHEET No. S4.9 OF 191 SHEETS

C:\Drafting\2016-07-21_2239 UDR H1 H2 Signs Phase 2\15_2239_S4-1 thru S4-12.dwg, 10/6/2016 7:33:10 AM, tamahana

FED. ROAD DIST. NO.	STATE	FED. AID PROJ. NO.	FISCAL YEAR	SHEET NO.	TOTAL SHEETS
HAWAII	HAW.	NH-IM-0300(142)	2016	39	191

Construction Sequence:

1. Installation of traffic control.
2. Set up temporary sign.
3. Installation of site specific BMP.
4. Demolition portion of existing concrete barrier.
5. Remove entire existing sign structure.
6. Remove existing concrete foundation.
7. Construct new concrete spread footing.
8. Erection of new sign structure and sign panel. There is no need to install both sides cantilever at the same time since the column support is designed sufficiently.
9. Restore concrete barrier.
10. Repair pavement.
11. Remove site specific BMP.
12. Remove traffic control.

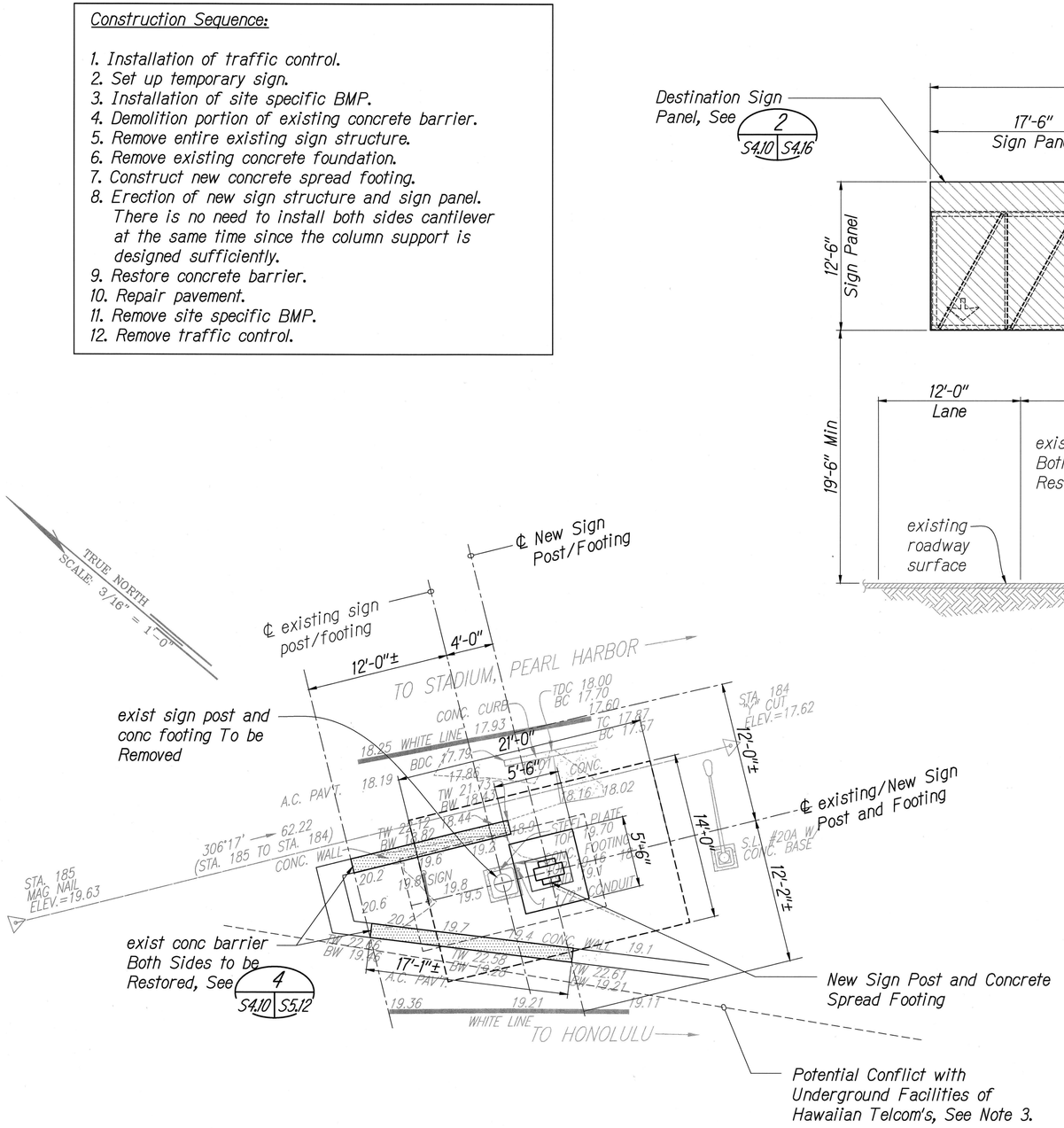

78EBR-822 - FOUNDATION PLAN 2 S4.10 S4.10
Scale: 3/16" = 1'-0"

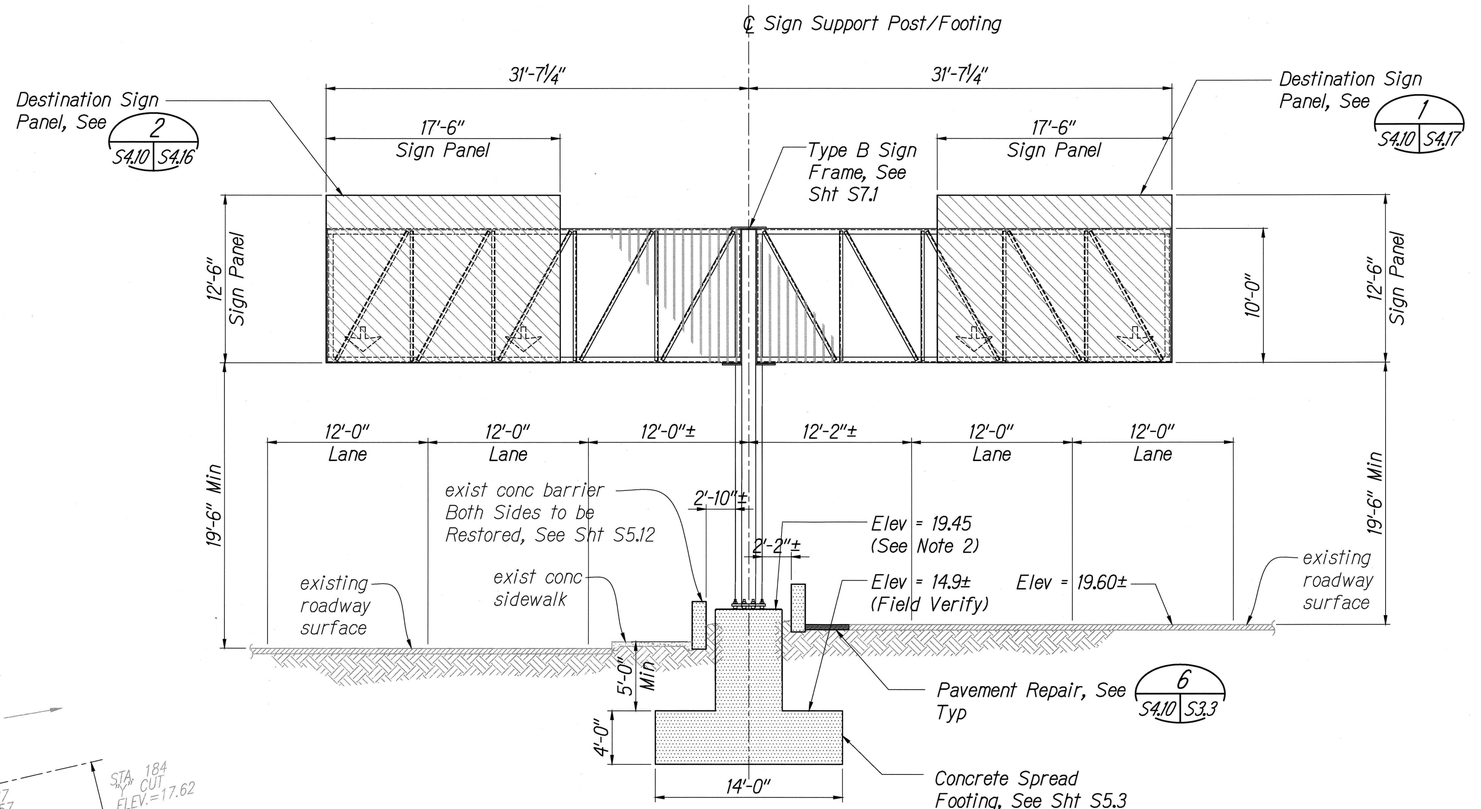

78EBR-822 - ELEVATION 1 S4.10 S4.10
Scale: 3/16" = 1'-0"

Notes:
1. See Sheet E3.9 for Revised Electrical Plan.
2. Top of concrete pedestal shall be at least 4", but no more than 6" above existing highest grade.
3. The response to the consultation letter sent by Hawaiian Telcom during the design phase indicates potential conflict exists in the area of sign 78EBR-822. The contractor shall verify this during the construction.

BENCHMARK
Referred to SS9-19H (Honolulu High Capacity Transit Corridor Project)
Brass Disk
Elev. = 36.32, MSL

KEN KAZUO HAYASHIDA
LICENSED PROFESSIONAL ENGINEER
No. 6818-S
HAWAII, U.S.A.

EXPIRATION DATE OF THE LICENSE 4/30/2018
THIS WORK WAS PREPARED BY ME OR UNDER MY SUPERVISION

STATE OF HAWAII
DEPARTMENT OF TRANSPORTATION
HIGHWAYS DIVISION

SIGN 78EBR-822 GENERAL ARRANGEMENT

INTERSTATE ROUTE H-1, H-2 AND H201
DESTINATION SIGN UPGRADE / REPLACEMENT, PHASE 2
Federal Aid Project NO. - NH-IM-0300(142)
Scale: As Shown Date: May 2016

SHEET No. S4.10 OF 191 SHEETS

P:\Drafting\2016-07-21_2239 Dot H1 H2 Signs Phase 2\15_2239_S4-1 thru S4-12.dwg, 10/6/2016 7:33:11 AM, tamanaha

FED. ROAD DIST. NO.	STATE	FED. AID PROJ. NO.	FISCAL YEAR	SHEET NO.	TOTAL SHEETS
HAWAII	HAW.	NH-IM-0300(142)	2016	40	191

Construction Sequence:

1. Installation of traffic control.
2. Installation of site specific BMP.
3. Demolition portion of existing concrete barrier.
4. Remove entire existing sign structure.
5. Remove existing concrete foundation.
6. Construct new concrete foundation.
7. Erection of new sign structure and sign panel.
8. Restore concrete barrier.
9. Repair pavement.
10. Remove site specific BMP.
11. Remove traffic control.

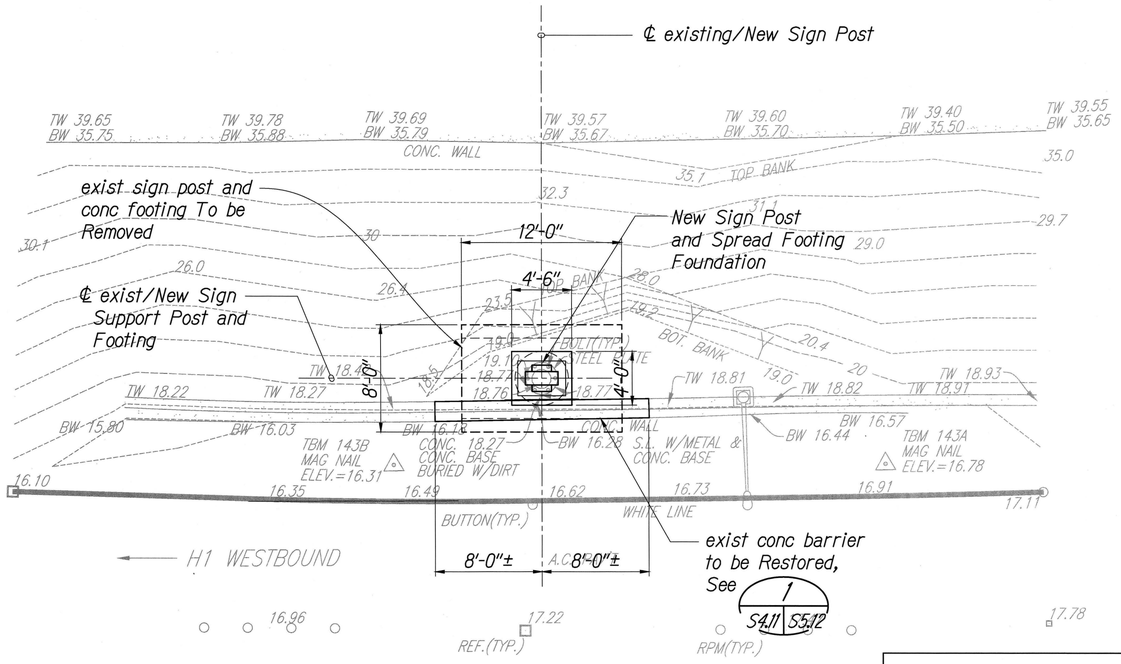

78WB-851 - FOUNDATION PLAN

Scale: 3/16" = 1'-0"

2 | S4.11 | S4.11

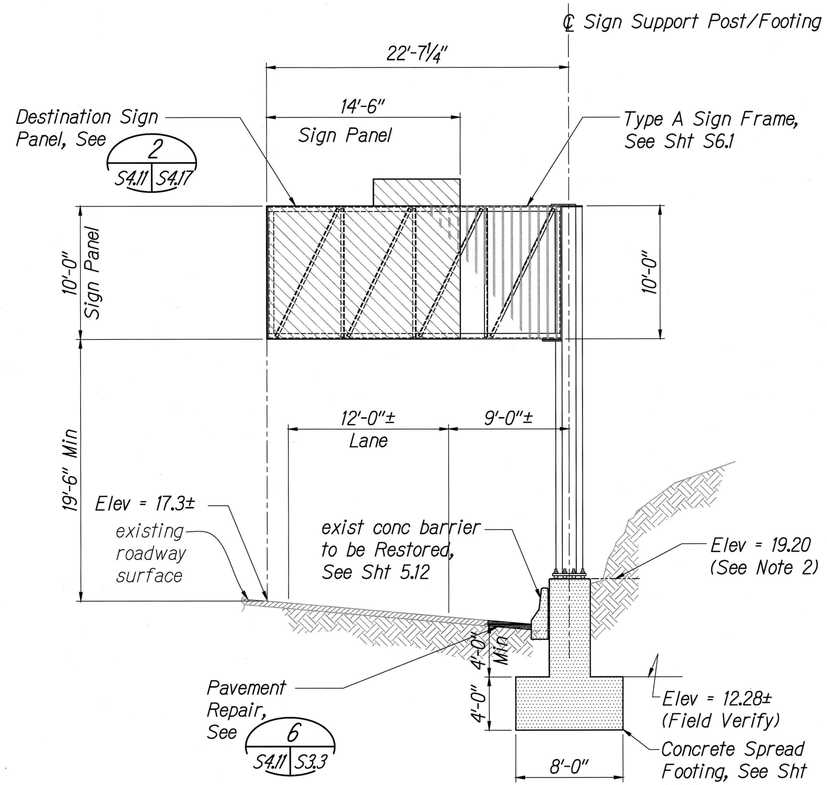

Notes:

1. See Sheet E3.8 for Revised Electrical Plan.
2. Top of concrete pedestal shall be at least 4", but no more than 6" above existing highest grade. Contractor to regrade around pedestal to accommodate clearance requirement.
3. Rock condition is assumed for this sign location based on field observation. The contractor shall inform the Engineer immediately if condition otherwise is encountered during the excavation.

78WB-851 - ELEVATION

Scale: 3/16" = 1'-0"

1 | S4.11 | S4.11

BENCHMARK
Referred to HCTC-55 (Honolulu High Capacity Transit Corridor Project)
Brass Disk
Elev. = 16.68, MSL

KEN KAZUO HAYASHIDA
LICENSED PROFESSIONAL ENGINEER
No. 6818-S
HAWAII, U.S.A.

EXPIRATION DATE OF THE LICENSE 4/30/2018
THIS WORK WAS PREPARED BY ME OR UNDER MY SUPERVISION

STATE OF HAWAII
DEPARTMENT OF TRANSPORTATION
HIGHWAYS DIVISION

SIGN 78WB-851 GENERAL ARRANGEMENT

INTERSTATE ROUTE H-1, H-2 AND H201
DESTINATION SIGN UPGRADE / REPLACEMENT, PHASE 2
Federal Aid Project NO. - NH-IM-0300(142)
Scale: As Shown Date: May 2016

SHEET No. S4.11 OF 191 SHEETS

P:\Drafting\2016-07-21_2239 Dot H1 H2 Signs Phase 2\15_2239_S4-1 thru S4-12.dwg, 10/6/2016 7:33:11 AM, tamanaha

FED. ROAD DIST. NO.	STATE	FED. AID PROJ. NO.	FISCAL YEAR	SHEET NO.	TOTAL SHEETS
HAWAII	HAW.	NH-IM-0300(142)	2016	41	191

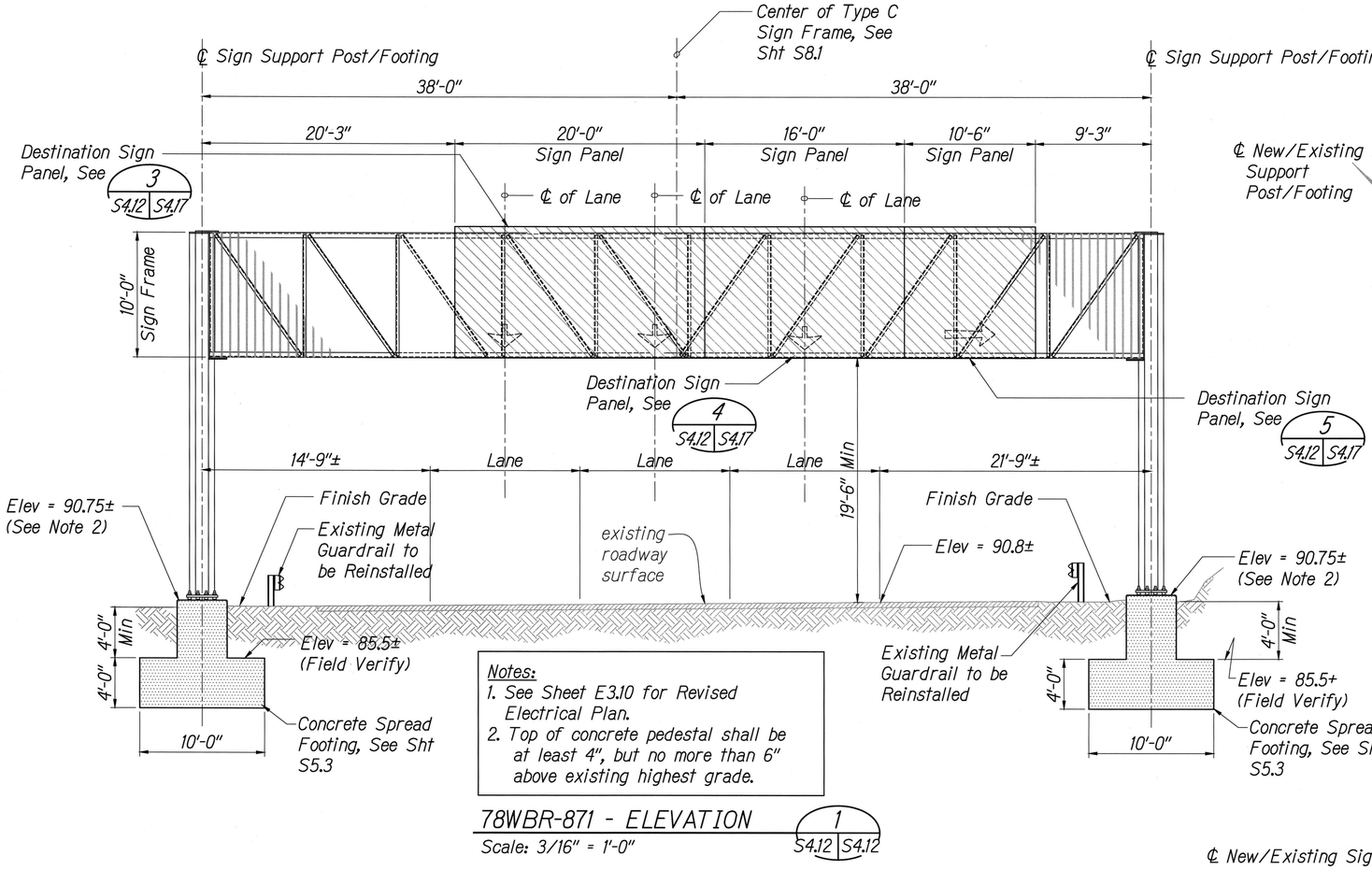

Notes:
1. See Sheet E3.10 for Revised Electrical Plan.
2. Top of concrete pedestal shall be at least 4", but no more than 6" above existing highest grade.

78WBR-871 - ELEVATION 1
Scale: 3/16" = 1'-0" S4.12 | S4.12

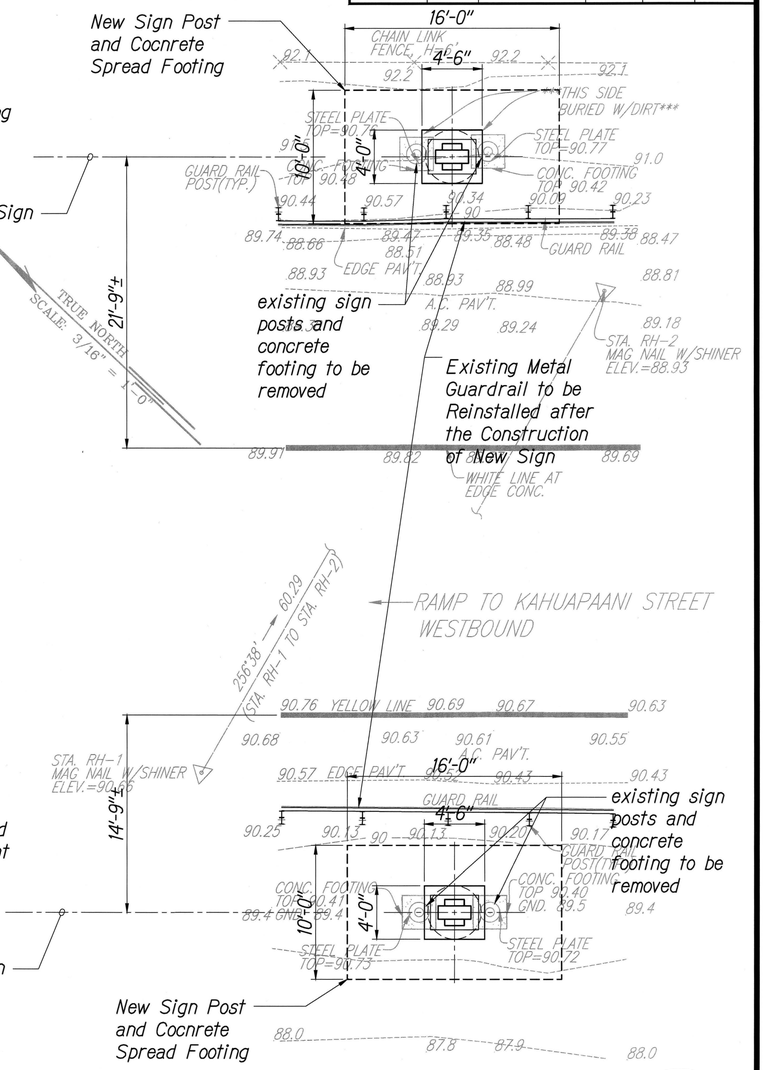

78WBR-871 - FOUNDATION PLAN 2
Scale: 3/16" = 1'-0" S4.12 | S4.12

Construction Sequence:

1. Installation of traffic control.
2. Set up temporary sign.
3. Installation of site specific BMP.
4. Remove existing guardrail temporarily.
5. Remove entire existing sign structure.
6. Remove existing concrete foundation.
7. Construct new concrete spread footing.
8. Erection of new sign structure and sign panel.
9. Backfill and restore disturbed grade to original condition.
10. Restore/relocate guardrail.
11. Remove site specific BMP.
12. Remove traffic control.

BENCHMARK
Referred to SS9-19H (Honolulu High Capacity Transit Corridor Project)
Brass Disk
Elev. = 36.32, MSL

KEN KAZUO HAYASHIDA LICENSED PROFESSIONAL ENGINEER No. 6818-S HAWAII, U.S.A.

EXPIRATION DATE OF THE LICENSE 4/30/2018
THIS WORK WAS PREPARED BY ME OR UNDER MY SUPERVISION

STATE OF HAWAII
DEPARTMENT OF TRANSPORTATION
HIGHWAYS DIVISION

SIGN 78WBR-871 GENERAL ARRANGEMENT

INTERSTATE ROUTE H-1, H-2 AND H201
DESTINATION SIGN UPGRADE / REPLACEMENT, PHASE 2
Federal Aid Project NO. - NH-IM-0300(142)
Scale: As Shown Date: May 2016

SHEET No. S4.12 OF 191 SHEETS

P:\Drafting\2016-07-21_2239 Dot H1 H2 Signs Phase 2\15_2239_S4-1 thru S4-12.dwg, 10/6/2016 7:33:12 AM, tamanaha

FED. ROAD DIST. NO.	STATE	FED. AID PROJ. NO.	FISCAL YEAR	SHEET NO.	TOTAL SHEETS
HAWAII	HAW.	NH-IM-0300(142)	2016	42	191

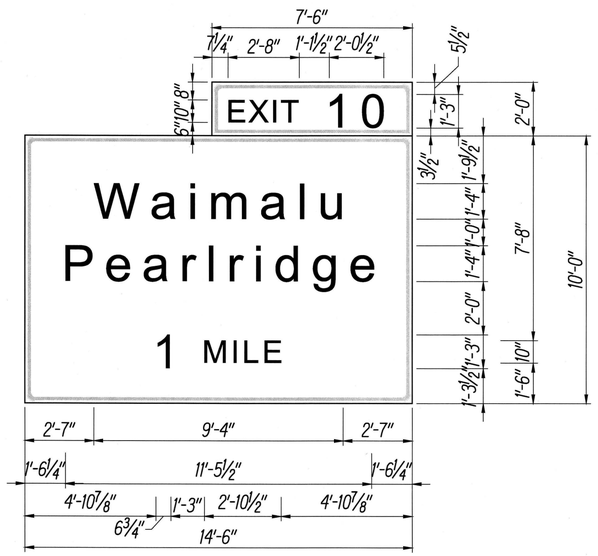

6.000" Radius, 2.000" Border, White on Green
"EXIT 10" E Mod;
12.000" Radius, 2.000" Border, White on Green;
"Waimalu" E Mod; "Pearlridge" E Mod;
"1 MILE" E Mod;

H1EB-112 — Not to Scale — 1 — S4.1 | S4.13

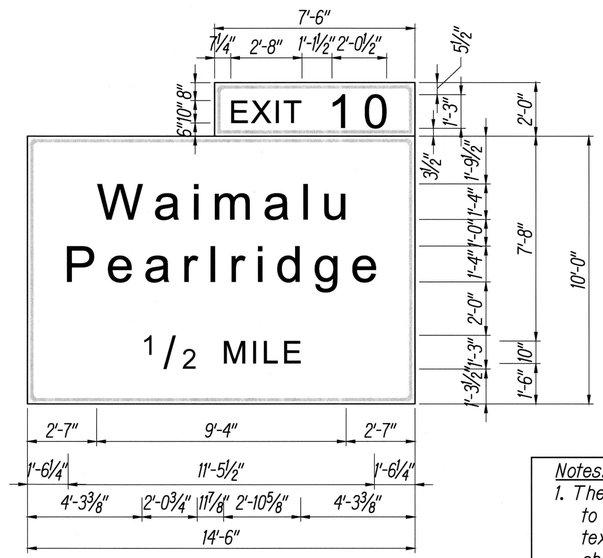

6.000" Radius, 2.000" Border, White on Green
"EXIT 10" E Mod;
12.000" Radius, 2.000" Border, White on Green;
"Waimalu" E Mod; "Pearlridge" E Mod;
"½ MILE" E Mod;

H1EB-113 — Not to Scale — 2 — S4.2 | S4.13

Notes:

1. *The contractor shall submit the Designation Sign Layout to HDOT and Engineer for review and approval. The text and details showing on each sign is subject to change per HDOT's decision.*
2. *Clearview Font No. 5 was terminated based on FHWA memo dated Jan. 28, 2016. The sign layout shall only use FHWA standard Alphabets (Series E Modified).*
3. *For Interstate Route Marker, see State STD Plan TE-10.*
4. *For State Route Markers and Border details, see State STD Plan TE-12.*
5. *For Typical Arrow Details, see Detail 4 this sheet.*
6. *Above Notes are applicable to sheets S4.13 thru S4.17.*

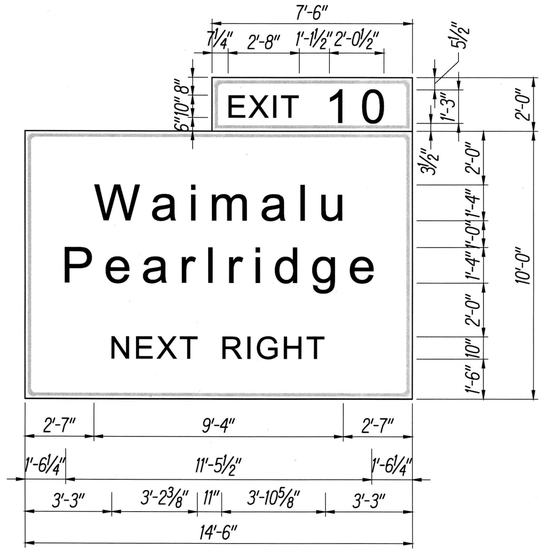

6.000" Radius, 2.000" Border, White on Green
"EXIT 10" E Mod;
12.000" Radius, 2.000" Border, White on Green;
"Waimalu" E Mod; "Pearlridge" E Mod;
"NEXT RIGHT" E Mod;

H1EB-114 — Not to Scale — 3 — S4.3 | S4.13

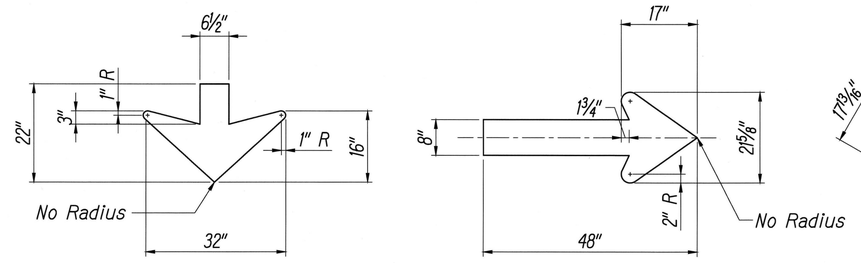

TYPICAL ARROW DETAILS — Scale: 3/4" = 1'-0" — 4 — S4.13 | S4.13

KEN KAZUO HAYASHIDA
LICENSED PROFESSIONAL ENGINEER
No. 6818-S
HAWAII, U.S.A.

EXPIRATION DATE OF THE LICENSE 4/30/2018
THIS WORK WAS PREPARED BY ME OR UNDER MY SUPERVISION

STATE OF HAWAII
DEPARTMENT OF TRANSPORTATION
HIGHWAYS DIVISION

DESTINATION SIGN PANEL LAYOUT - 1

INTERSTATE ROUTE H-1, H-2 AND H201
DESTINATION SIGN UPGRADE / REPLACEMENT, PHASE 2
Federal Aid Project NO. - NH-IM-0300(142)
Scale: As Shown Date: May 2016

SHEET No. S4.13 OF 191 SHEETS

P:\Drafting\2016-07-21_2239 Dot H1 H2 Signs Phase 2\16_2239_S4-13_S4-17.dwg, 10/6/2016 7:33:15 AM, tamanaha

FED. ROAD DIST. NO.	STATE	FED. AID PROJ. NO.	FISCAL YEAR	SHEET NO.	TOTAL SHEETS
HAWAII	HAW.	NH-1M-0300(142)	2016	43	191

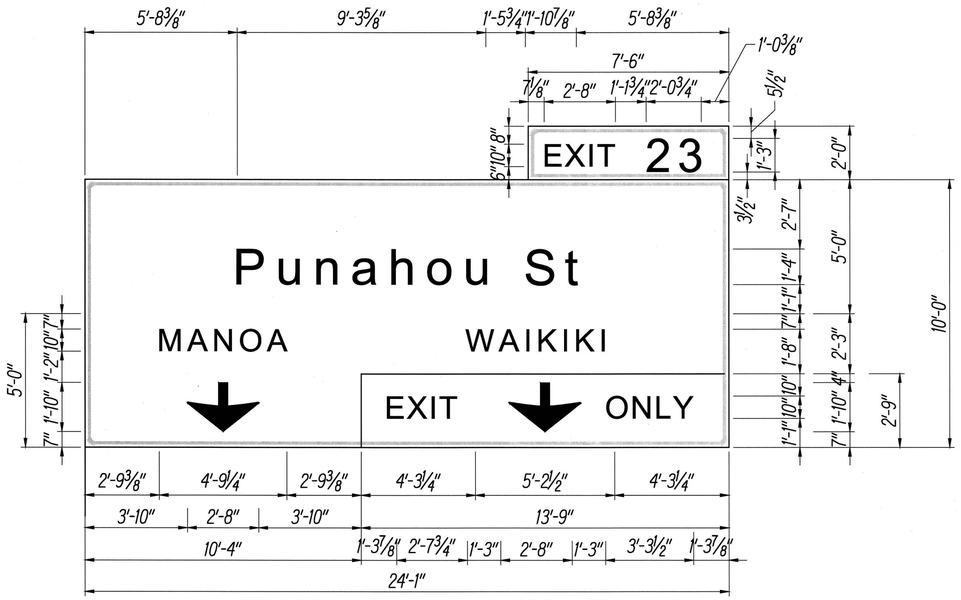

6.000" Radius, 2.000" Border, White on Green
"EXIT 23" E Mod;
12.000" Radius, 2.000" Border, White on Green;
"Punahou St" E Mod;
12.000" Radius, 2.000" Border, White on Green
"MANOA" E Mod; Down Arrow 22.000" 270°
12.000" Radius, 2.000" Border, White on Green;
"WAIKIKI" E Mod;
12.000" Radius, 2.000" Border, Black on Yellow;
"EXIT" E Mod; Down Arrow 22.000" 270°; "ONLY" E Mod;

H1EB-308 (RIGHT) — 1 — S4.4 | S4.14
Not to Scale

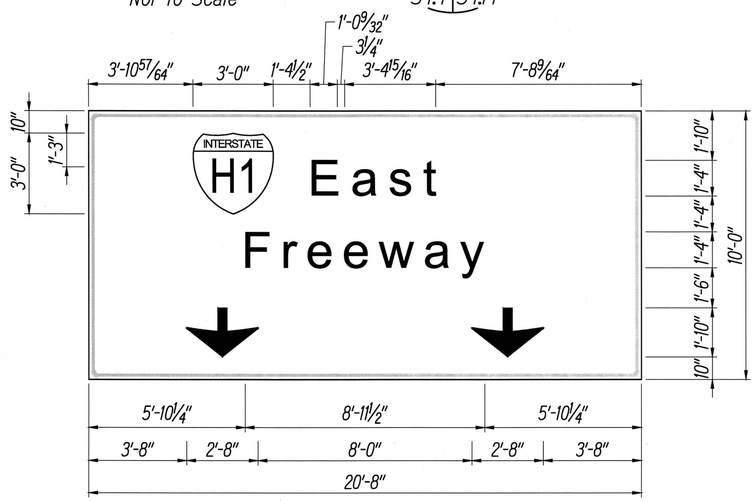

12.000" Radius, 2.000" Border, White on Green
"Stadium" E Mod; "Salt Lake Blvd" E Mod
Down Arrow 22.000" 270°; Down Arrow 22.000" 270°

H1EB-308 LEFT — 2 — S4.4 | S4.12
Not to Scale

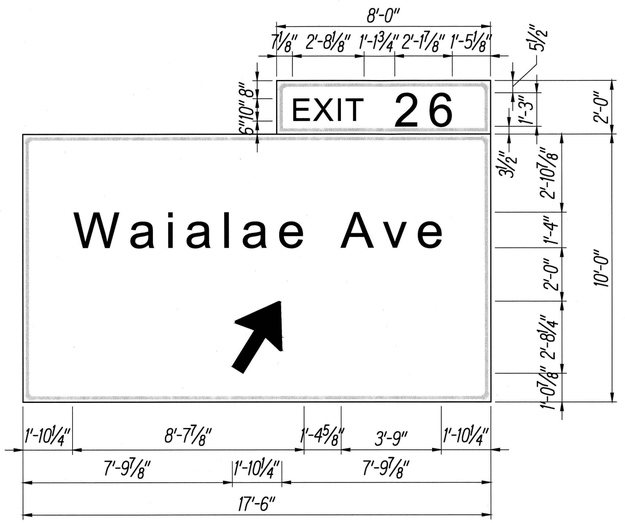

6.000" Radius, 2.000" Border, White on Green
"EXIT 26" E Mod;
12.000" Radius, 2.000" Border, White on Green;
"Waialae Ave" E Mod; Arrow 160 - 35.000" 60°

H1WBR-402 — 3 — S4.5 | S4.14
Not to Scale

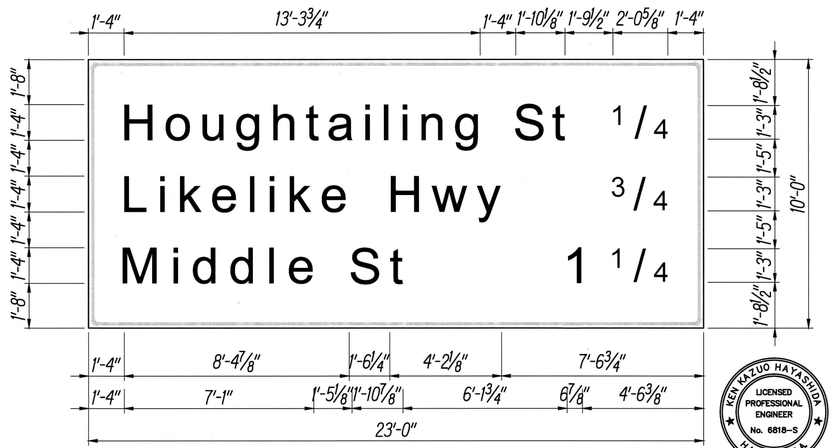

12.000" Radius, 2.000" Border, White on Green
"Houghtailing St" E Mod; "1/4" E Mod; "Likelike Hwy" E Mod;
"3/4" E Mod; "Middle St" E Mod; "1 1/4" E Mod;

H1WB-418 — 4 — S4.6 | S4.14
Not to Scale

KEN KAZUO HAYASHIDA
LICENSED PROFESSIONAL ENGINEER
No. 6818-S
HAWAII, U.S.A.

EXPIRATION DATE OF THE LICENSE 4/30/2018
THIS WORK WAS PREPARED BY ME OR UNDER MY SUPERVISION

STATE OF HAWAII
DEPARTMENT OF TRANSPORTATION
HIGHWAYS DIVISION

DESTINATION SIGN PANEL LAYOUT - 2

INTERSTATE ROUTE H-1, H-2 AND H201
DESTINATION SIGN UPGRADE / REPLACEMENT, PHASE 2
Federal Aid Project NO. - NH-1M-0300(142)
Scale: As Shown Date: May 2016

SHEET No. S4.14 OF 191 SHEETS

P:\Drafting\2016-07-21_2239 Dot H1 H2 Signs Phase 2\16_2239_S4-13_S4-17.dwg, 10/6/2016 7:33:16 AM, tamanaha

FED. ROAD DIST. NO.	STATE	FED. AID PROJ. NO.	FISCAL YEAR	SHEET NO.	TOTAL SHEETS
HAWAII	HAW.	NH-IM-0300(142)	2016	44	191

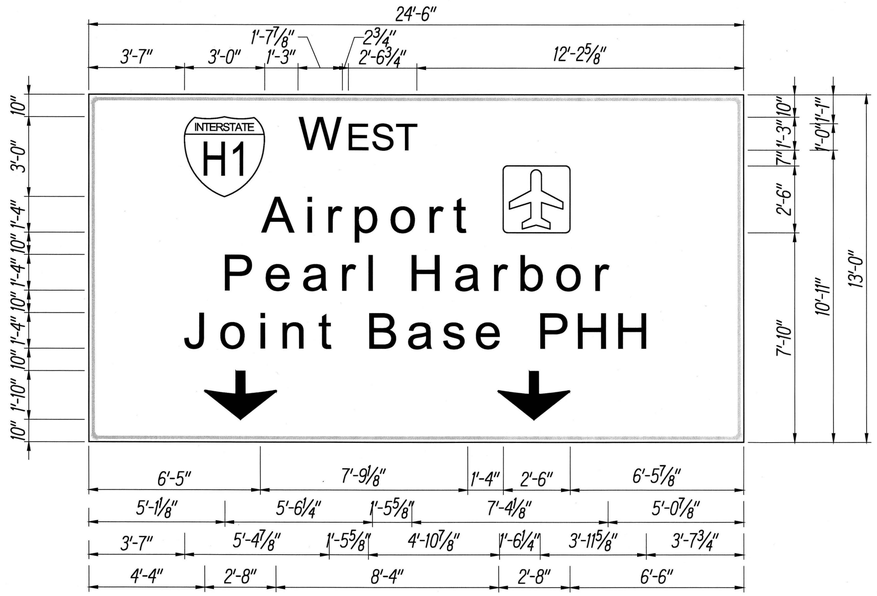

12.000" Radius, 2.000" Border, White on Green
"W EST" E Mod; "Airport" E Mod; 15 3030; "Pearl Harbor" E Mod;
"Joint Base PHH" E Mod; Down Arrow 22.000" 270"; Down Arrow 22.000" 270";

H1WB-424 — 1 — S4.7 | S4.15
Not to Scale

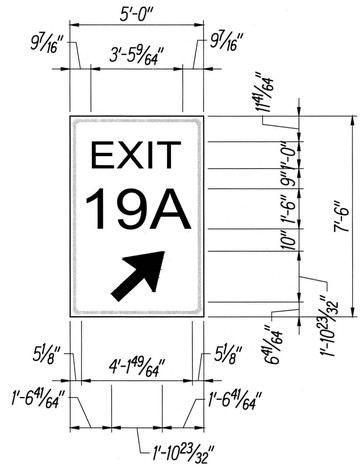

6.00" Radius, 1.50" Border, White on Green
"EXIT" E 150% spacing; "20 C" E 75% spacing;
Standard Arrow Custom 29.25" X 18.25" 45";

H1WB-424 (SIGN ON POST) — 2 — S4.7 | S4.15
Not to Scale

Notes:
1. *The vertical distance from the bottom of the sign to the finish grade of roadway shall be 7 feet minimum.*
2. *See detail 5 (S4.15 | S4.15) for mounting installation for the new sign.*

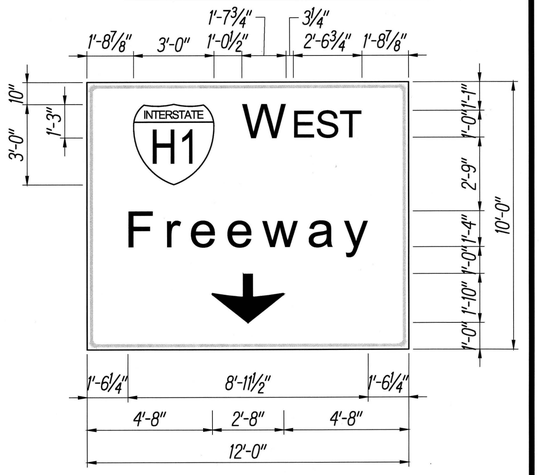

12.000" Radius, 2.000" Border, White on Green
"W EST" E Mod; "Freeway" E Mod;
Down Arrow 22.000" 270"

H1WBR-451 (LEFT) — 3 — S4.8 | S4.15
Not to Scale

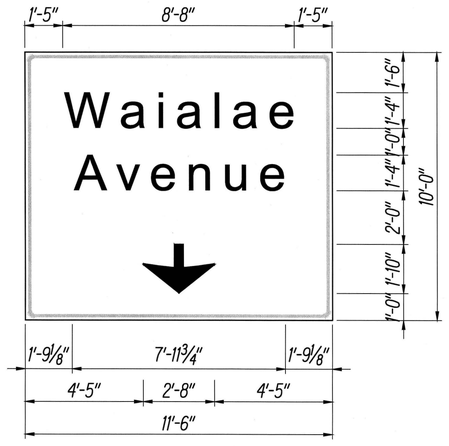

12.000" Radius, 2.000" Border, White on Green
"Waialae" E Mod; "Avenue" E Mod;
Down Arrow 22.000" 270"

H1WBR-451 (RIGHT) — 4 — S4.8 | S4.15
Not to Scale

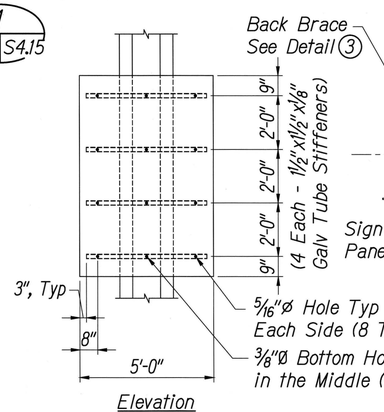

Plan View

Elevation

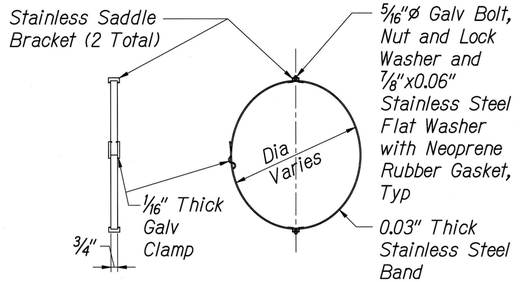

Left Side View — Plan

Detail ① : Band Bracket

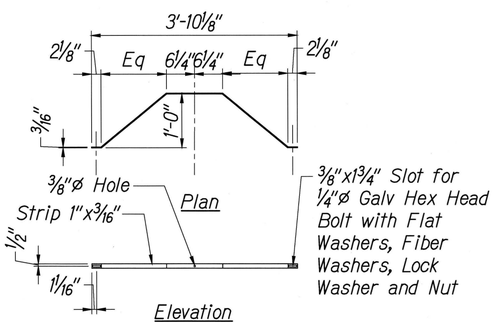

Elevation

Detail ② : Back Brace Details

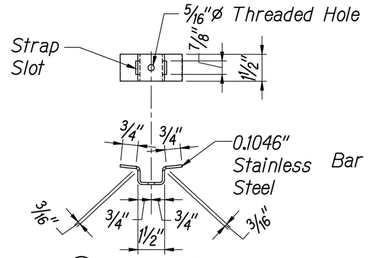

Detail ③ : Saddle Bracket

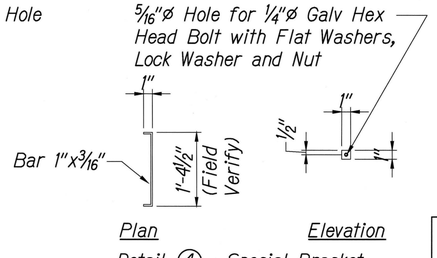

Plan — Elevation

Detail ④ : Special Bracket

H1WB-417 EXIT SIGN MOUNTING INSTALLATION — 5 — S4.15 | S4.15
Not to Scale

Note:
1. *See HDOT STD Plan TE-01 and TE-01A for additional information*
2. *All steel members shall be hot-dipped galvanized after fabrication.*

KEN KAZUO HAYASHIDA
LICENSED PROFESSIONAL ENGINEER
No. 6818-S
HAWAII, U.S.A.

EXPIRATION DATE OF THE LICENSE 4/30/2018
THIS WORK WAS PREPARED BY ME OR UNDER MY SUPERVISION

STATE OF HAWAII
DEPARTMENT OF TRANSPORTATION
HIGHWAYS DIVISION

DESTINATION SIGN PANEL LAYOUT - 4

INTERSTATE ROUTE H-1, H-2 AND H201
DESTINATION SIGN UPGRADE / REPLACEMENT, PHASE 2
Federal Aid Project NO. - NH-IM-0300(142)
Scale: As Shown — Date: May 2016

SHEET No. S4.15 OF 191 SHEETS

P:\Drafting\2016-07-21_2239 Dot H1 H2 Signs Phase 2\16_2239_S4-13_S4-17.dwg, 10/6/2016 7:33:17 AM, tamanaha

FED. ROAD DIST. NO.	STATE	FED. AID PROJ. NO.	FISCAL YEAR	SHEET NO.	TOTAL SHEETS
HAWAII	HAW.	NH-1M-0300(142)	2016	45	191

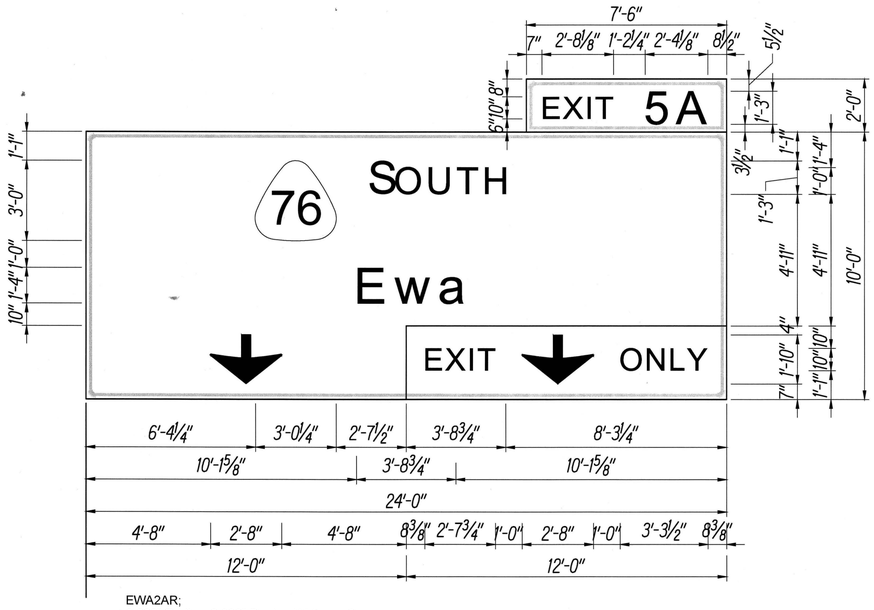

EWA2AR;
3.000" Radius, 2.000" Border, White on Green
"EXIT 5A" E Mod;
12.000" Radius, 2.000" Border, White on Green;
"S OUTH" E Mod; "Ewa" E Mod;
12.000" Radius, 2.000" Border, White on Green;
Down Arrow 22.000" 270°
12.000" Radius, 2.000" Border, Black on Yellow;
"EXIT" E Mod; Down Arrow 22.000" 270°; "ONLY" E Mod;

H1WB-605 — 1
Not to Scale — S4.9 | S4.16

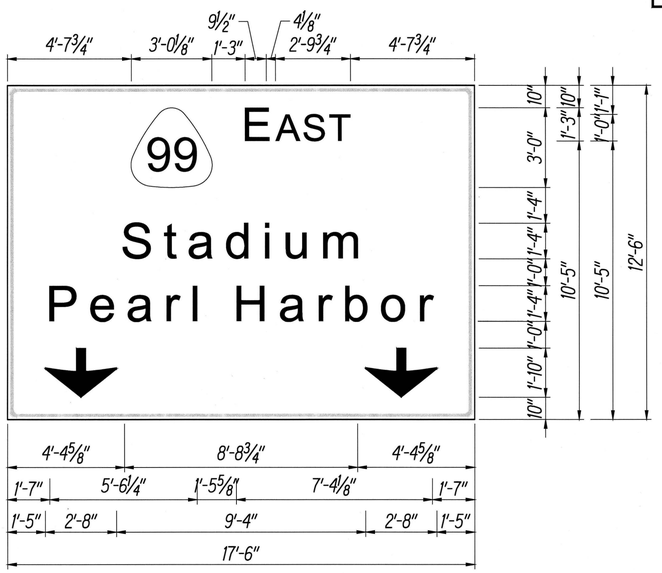

12.000" Radius, 2.000" Border, White on Green
"E AST" E Mod; "Stadium" E Mod;
"Pearl Harbor" E Mod; Down Arrow 22.000" 270°; Down Arrow 22.000" 270°;

78EBR-822 LEFT — 2
Not to Scale — S4.10 | S4.16

KEN KAZUO HAYASHIDA
LICENSED PROFESSIONAL ENGINEER
No. 6818-S
HAWAII, U.S.A.

EXPIRATION DATE OF THE LICENSE 4/30/2018
THIS WORK WAS PREPARED BY ME OR UNDER MY SUPERVISION

STATE OF HAWAII
DEPARTMENT OF TRANSPORTATION
HIGHWAYS DIVISION

DESTINATION SIGN PANEL LAYOUT - 5

INTERSTATE ROUTE H-1, H-2 AND H201
DESTINATION SIGN UPGRADE / REPLACEMENT, PHASE 2
Federal Aid Project NO. - NH-1M-0300(142)

Scale: As Shown — Date: May 2016

SHEET No. S4.16 OF 191 SHEETS

P:\Drafting\2016-07-21_2239 Dot H1 H2 Signs Phase 2\16_2239_S4-13_S4-17.dwg, 10/6/2016 7:33:18 AM, tamanaha

FED. ROAD DIST. NO.	STATE	FED. AID PROJ. NO.	FISCAL YEAR	SHEET NO.	TOTAL SHEETS
HAWAII	HAW.	NH-IM-0300(142)	2016	46	191

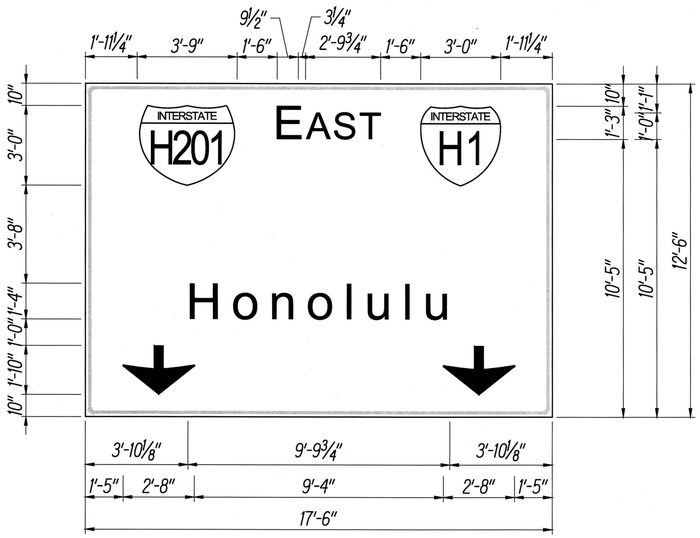

12.000" Radius, 2.000" Border, White on Green
"E AST" E Mod; "Honolulu" E Mod;
Down Arrow 22.000" 270°; Down Arrow 22.000" 270°;

78EBR-822 RIGHT — 1 — S4.10 | S4.17
Not to Scale

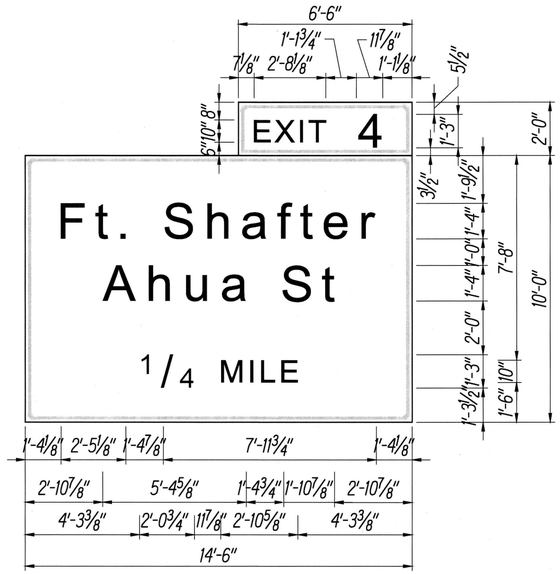

6.000" Radius, 2.000" Border, White on Green
"EXIT 4" E Mod;
12.000" Radius, 2.000" Border, White on Green;
"Ft. Shafter" E Mod; "Ahua St" E Mod;
"¼ Mile" E Mod;

78WB-851 — 2 — S4.11 | S4.17
Not to Scale

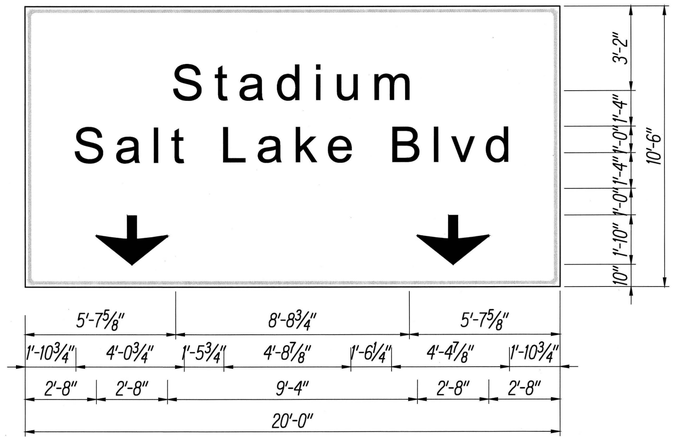

12.000" Radius, 2.000" Border, White on Green
"Stadium" E Mod; "Salt Lake Blvd" E Mod
Down Arrow 22.000" 270°; Down Arrow 22.000" 270°

78WBR-871 LEFT — 3 — S4.12 | S4.17
Not to Scale

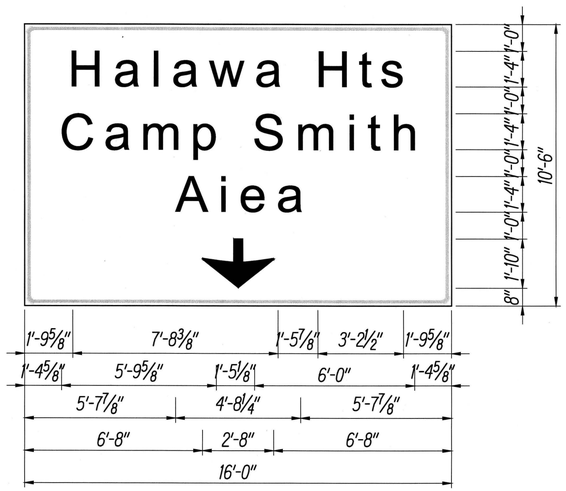

12.000" Radius, 2.000" Border, White on Green
"Halawa Hts" E Mod; "Camp Smith" E Mod;
"Aiea" E Mod; Down Arrow 22.000" 270°;

78WBR-871 CENTER — 4 — S4.12 | S4.17
Not to Scale

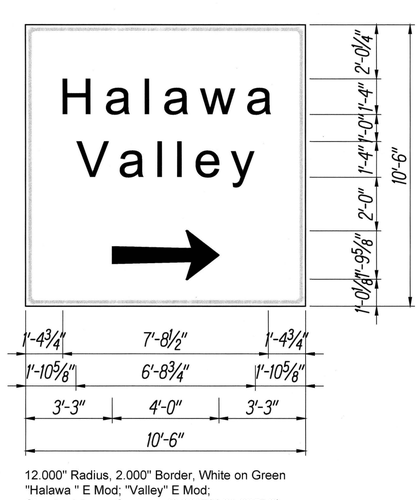

12.000" Radius, 2.000" Border, White on Green
"Halawa " E Mod; "Valley" E Mod;
Standard Arrow Custom 48.000" X 21.625" 0°;

78WBR-871 RIGHT — 5 — S4.12 | S4.17
Not to Scale

KEN KAZUO HAYASHIDA
LICENSED PROFESSIONAL ENGINEER
No. 6818-S
HAWAII, U.S.A.

EXPIRATION DATE OF THE LICENSE 4/30/2018
THIS WORK WAS PREPARED BY ME OR UNDER MY SUPERVISION

STATE OF HAWAII
DEPARTMENT OF TRANSPORTATION
HIGHWAYS DIVISION

DESTINATION SIGN PANEL LAYOUT - 6

INTERSTATE ROUTE H-1, H-2 AND H201
DESTINATION SIGN UPGRADE / REPLACEMENT, PHASE 2
Federal Aid Project NO. - NH-IM-0300(142)

Scale: As Shown Date: May 2016

SHEET No. S4.17 OF 191 SHEETS

P:\Drafting\2016-07-21_2239 Dot H1 H2 Signs Phase 2\16_2239_S4-13_S4-17.dwg, 10/6/2016 7:33:19 AM, tamanaha

FED. ROAD DIST. NO.	STATE	FED. AID PROJ. NO.	FISCAL YEAR	SHEET NO.	TOTAL SHEETS
HAWAII	HAW.	NH-IM-0300(142)	2016	47	191

Sign Frame Foundation Notes:

1. Concrete for drilled shafts shall have a minimum 28-day compressive strength of 4,500 psi.
2. Reinforcing steel shall be deformed bars conforming to ASTM A615, Grade 60.
3. For the location and size of each sign frame foundation (Drilled Shaft foundation or Spread Footing), see Sht S4.1 to S4.12 - Sign General Arrangement.
4. See Sht S3.1 - Structural General Notes, for additional notes related to foundation.
5. The conduits into the sign frame foundation is reserved for future use. Conduit shall slope away from pole foundation. Conduit shall stub out 5'-0" minimum.
6. Grounding conductor shall be attached to sign support.
7. Drilled shaft/Spread footing vertical and horizontal reinforcing shall be placed so that it does not conflict with the anchor bolts and anchor plates.
8. Drilled shaft shall be constructed with the use of temporary casing to prevent caving.
9. A minimum 5 foot head of concrete above the bottom of the casing or adequate concrete head to counter hydrostatic pressure shall be maintained during removal of the casing to reduce the potential for "necking" of the drilled shaft.
10. In anticipation of existence of shallow ground water during drilled shaft excavations, concrete placement by tremie methods will be required during construction of the drilled shafts under such conditions.
11. The Contractor shall exercise care in drilling the shaft holes and placing concrete into the holes. Drilling by methods utilizing drilling fluids is not allowed. A low-shrink concrete mix with high slump (7 to 9-inch range) shall be used to provide close contact between the drilled shafts and the surrounding soils. Concrete shall be placed in a suitable manner to reduce the potential for segregation of the aggregates from the concrete mix.
12. Excavations for drilled shaft shall be observed by the Geotechnical Engineer prior to placement of concrete and reinforcing.
13. Rock condition is assumed for the sign location of H1WB-424 and 78WB-851 based on field observation. The Contractor shall inform the Engineer immediately if material other than rock is encountered during the excavation.
14. Any soft and/or loose materials encountered at the bottom of the footing excavations should be over-excavated to expose firm material. The over-excavation should be backfilled with lean concrete, or granular material compacted to a minimum of 95% relative compaction.
15. Bottom of all footing excavations bearing on the in-situ soils and engineered fills shall be compacted to a minimum of 95% relative compaction.
16. The vertical reinforcing of drilled shaft, concrete pedestal and/or spread footing shall be placed so that it does not conflict with the anchor bolts and anchor plates.
17. Crosshole Sonic Log (CSL) is required for every drilled shaft (unless the drilled hole is completely dry). The access tubes shall not interfere with anchor bolt installation. The cost of CSL testing shall be Incidental to the Various Contract Items.

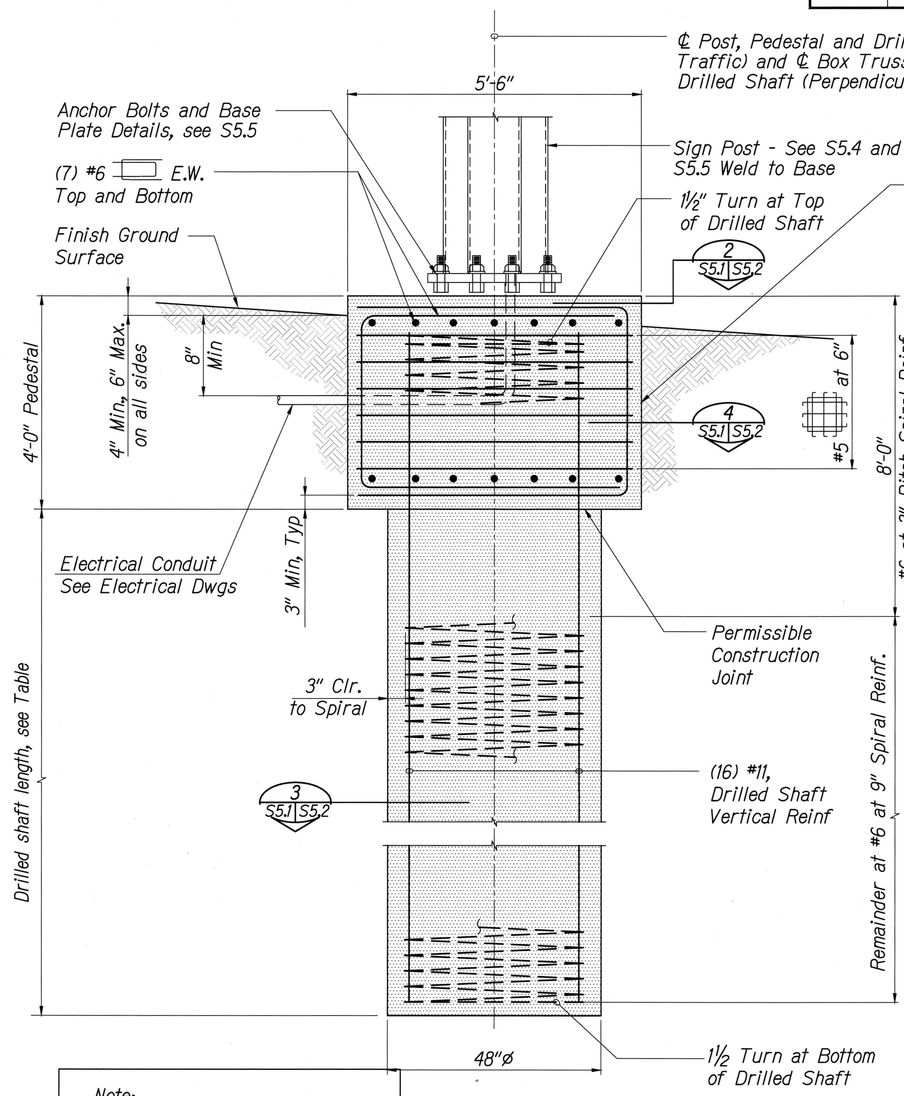

DRILLED SHAFT LENGTH	
Destination Sign No.	Length
H1EB-308	25'-0"
H1WB-424 (Rock Condition at the site Assumed)	16'-0"

Note:
For the Signs with a New Concrete Pedestal on the Top of Drilled Shaft Foundation, see 1 S5.1 S5.2

ELEVATION - TYPICAL SIGN POST
DRILLED SHAFT FOUNDATION DETAIL
Not to Scale

1 S5.2 S5.1

KEN KAZUO HAYASHIDA LICENSED PROFESSIONAL ENGINEER No. 6818-S HAWAII, U.S.A.

EXPIRATION DATE OF THE LICENSE 4/30/2018
THIS WORK WAS PREPARED BY ME OR UNDER MY SUPERVISION

STATE OF HAWAII
DEPARTMENT OF TRANSPORTATION
HIGHWAYS DIVISION

SIGN FRAME FOUNDATION NOTES & DRILLED SHAFT

INTERSTATE ROUTE H-1, H-2 AND H201
DESTINATION SIGN UPGRADE / REPLACEMENT, PHASE 2
Federal Aid Project NO. - NH-IM-0300(142)
Scale: As Shown Date: May 2016

SHEET No. S5.1 OF 191 SHEETS

P:\Drafting\2016-07-21_2239 Dot H1 H2 Signs Phase 2\17_2239_S5-01.dwg, 10/6/2016 7:33:21 AM, tamanaha

FED. ROAD DIST. NO.	STATE	FED. AID PROJ. NO.	FISCAL YEAR	SHEET NO.	TOTAL SHEETS
HAWAII	HAW.	NH-IM-0300(142)	2016	48	191

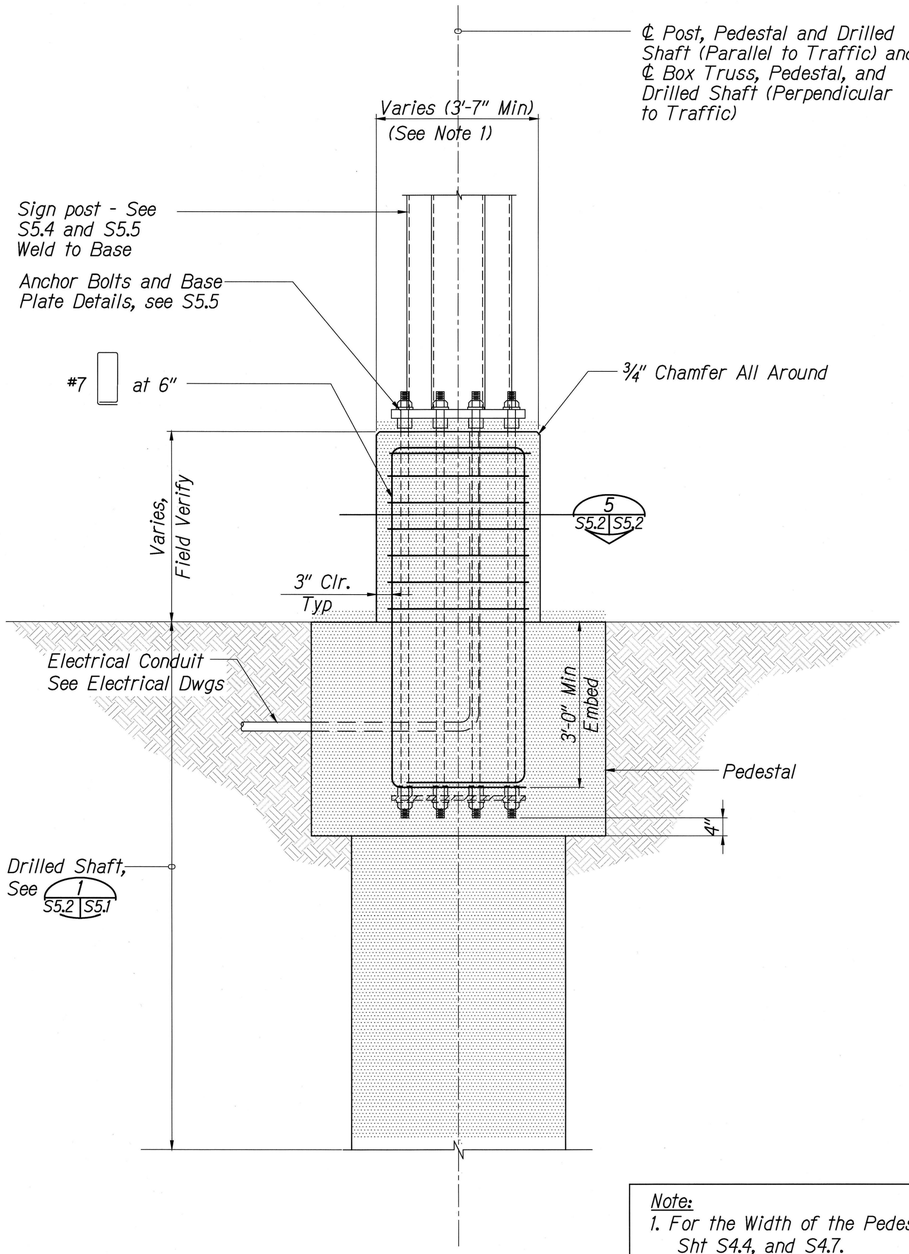

Note:
1. For the Width of the Pedestal, see Sht S4.4, and S4.7.

ELEVATION - NEW CONCRETE PEDESTAL ON DRILLED SHAFT FOUNDATION DETAIL 1
Not to Scale
S4.4, S4.7, S5.1, S5.2, S5.10, S5.12 | S5.2

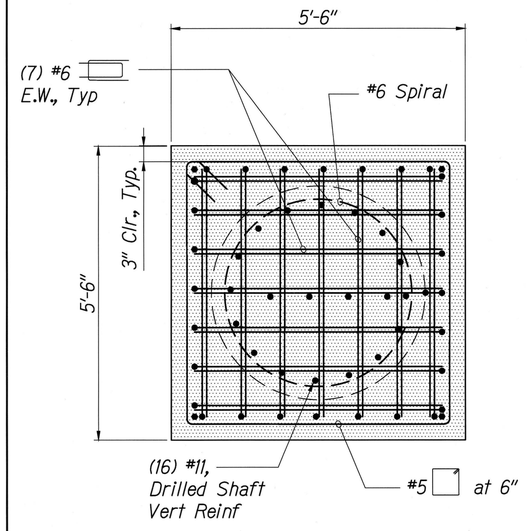

SECTION 2
Not to Scale
S5.1 | S5.2

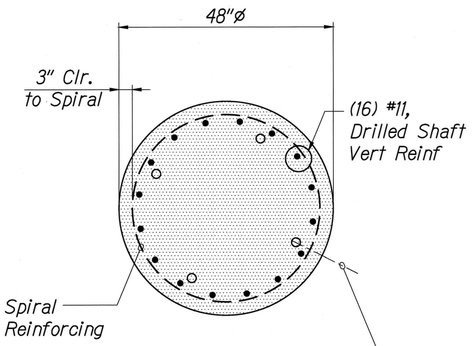

(4) 2" I.D. Access Tubes for Crosshole Sonic Log Testing Equally Spaced, in Accordance with Specification Section 511. Tubes Shall be Schedule 40 Pipe Conforming to ASTM A 53, Grade A or B, Type E,F or S.

SECTION 3
Not to Scale
S5.1 | S5.2

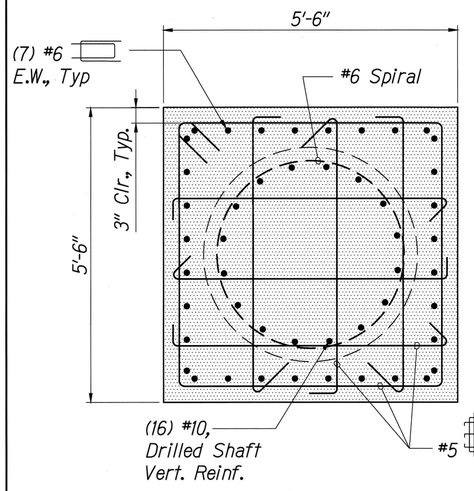

SECTION 4
Not to Scale
S5.1 | S5.2

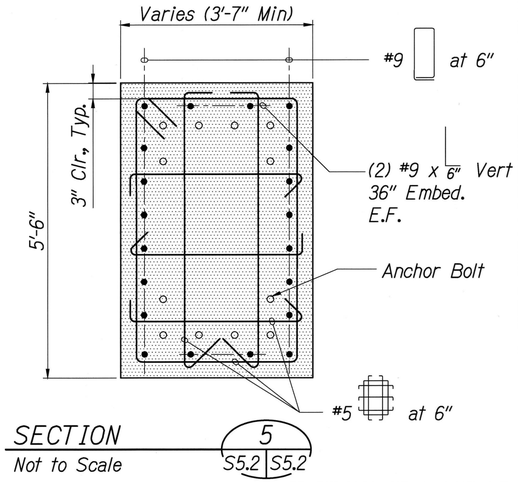

SECTION 5
Not to Scale
S5.2 | S5.2

KEN KAZUO HAYASHIDA
LICENSED PROFESSIONAL ENGINEER
No. 6818-S
HAWAII, U.S.A.

EXPIRATION DATE OF THE LICENSE 4/30/2018
THIS WORK WAS PREPARED BY ME OR UNDER MY SUPERVISION

STATE OF HAWAII
DEPARTMENT OF TRANSPORTATION
HIGHWAYS DIVISION

SIGN FRAME FOUNDATION-DRILLED SHAFT DETAILS

INTERSTATE ROUTE H-1, H-2 AND H201
DESTINATION SIGN UPGRADE / REPLACEMENT, PHASE 2
Federal Aid Project NO. - NH-IM-0300(142)
Scale: As Shown Date: May 2016

SHEET No. S5.2 OF 191 SHEETS

P:\Drafting\2016-07-21_2239 Oct H1 H2 Signs Phase 2\18_2239_S5-02.dwg, 10/6/2016 7:33:24 AM, tamahana

FED. ROAD DIST. NO.	STATE	FED. AID PROJ. NO.	FISCAL YEAR	SHEET NO.	TOTAL SHEETS
HAWAII	HAW.	NH-IM-0300(142)	2016	49	191

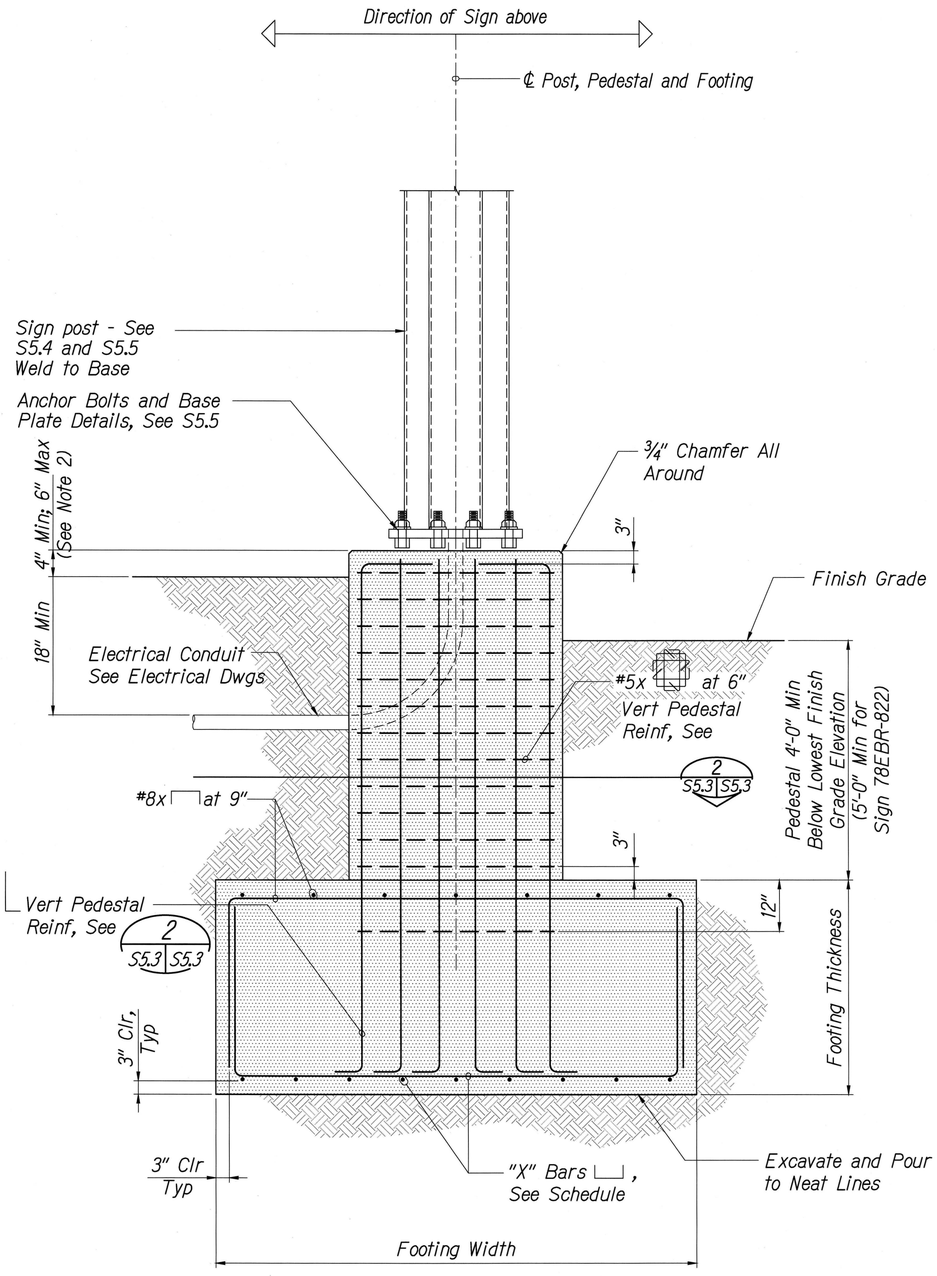

TYPICAL SIGN POST SPREAD FOOTING DETAIL 1
Scale: 3/4" = 1'-0" S4.6, S4.8, S4.9, S4.10, S4.11, S4.12, S5.3

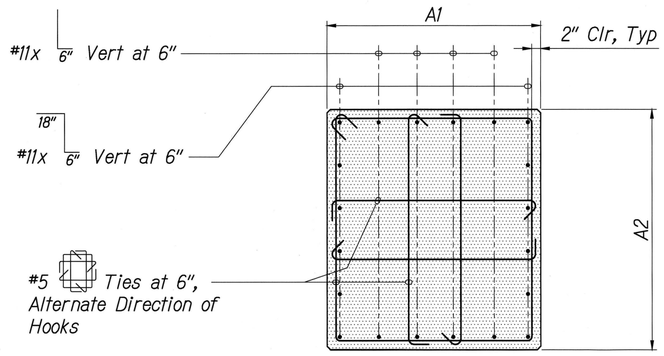

SECTION 2
Scale: 3/4" = 1'-0" S5.3 S5.3

FOOTING SCHEDULE			
	Destination Sign No.	Pedestal Dimensions	"X" Bars
1.	H1WB-418, 78EBR-851	A1 = 4'-0" A2 = 4'-6"	# 9 at 9"
2.	H1WBR-451, H1WB-605, 78EBR-822, 78WBR-871	A1 = 4'-0" A2 = 4'-6"	# 9 at 6"
3.	78WBR-871	A1 = 5'-6" A2 = 5'-6"	# 10 at 6"

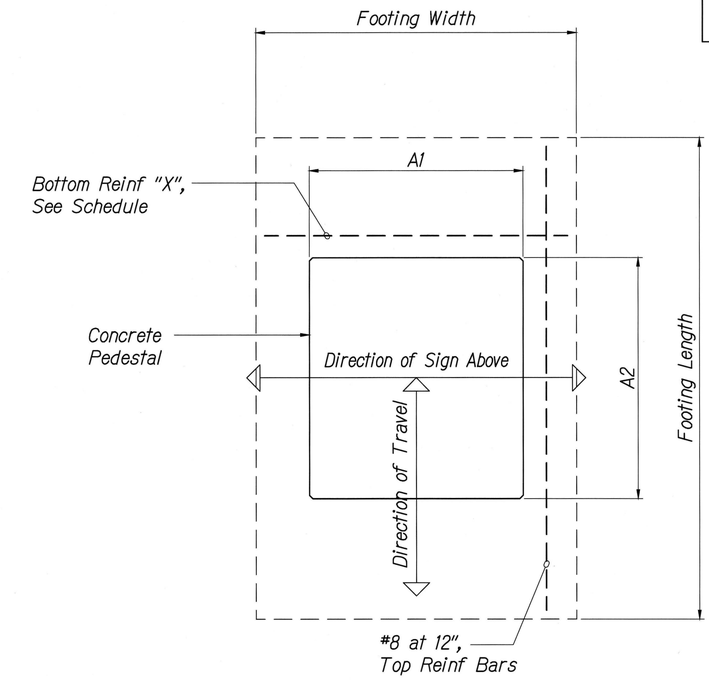

PLAN - TYPICAL FOOTING DETAIL 3
Not to Scale S5.3 S5.3

Note:
1. For the Location and Size of each Sign Frame Concrete Spread Footing, see Sht S4.6, S4.8, S4.9, S4.10, S4.11, S4.12 - Sign General Arrangement.
2. Top of concrete pedestal shall be at least 4", but no more than 6" above existing highest grade.
3. Before placing rebar for foundation footing, the soil shall be compacted to 95% relative density per ASTM D1557.

KEN KAZUO HAYASHIDA LICENSED PROFESSIONAL ENGINEER No. 6818-S HAWAII, U.S.A.

EXPIRATION DATE OF THE LICENSE 4/30/2018
THIS WORK WAS PREPARED BY ME OR UNDER MY SUPERVISION

STATE OF HAWAII
DEPARTMENT OF TRANSPORTATION
HIGHWAYS DIVISION

SIGN FRAME FOUNDATION CONCRETE SPREAD FOOTING

INTERSTATE ROUTE H-1, H-2 AND H201
DESTINATION SIGN UPGRADE / REPLACEMENT, PHASE 2
Federal Aid Project NO. - NH-IM-0300(142)
Scale: As Shown Date: May 2016

SHEET No. S5.3 OF 191 SHEETS

P:\Drafting\2016-07-21_2239 Dot H1 H2 Signs Phase 2\19_2239_S5-03.dwg, 10/6/2016 7:33:26 AM, tamanaha

FED. ROAD DIST. NO.	STATE	FED. AID PROJ. NO.	FISCAL YEAR	SHEET NO.	TOTAL SHEETS
HAWAII	HAW.	NH-IM-0300(142)	2016	50	191

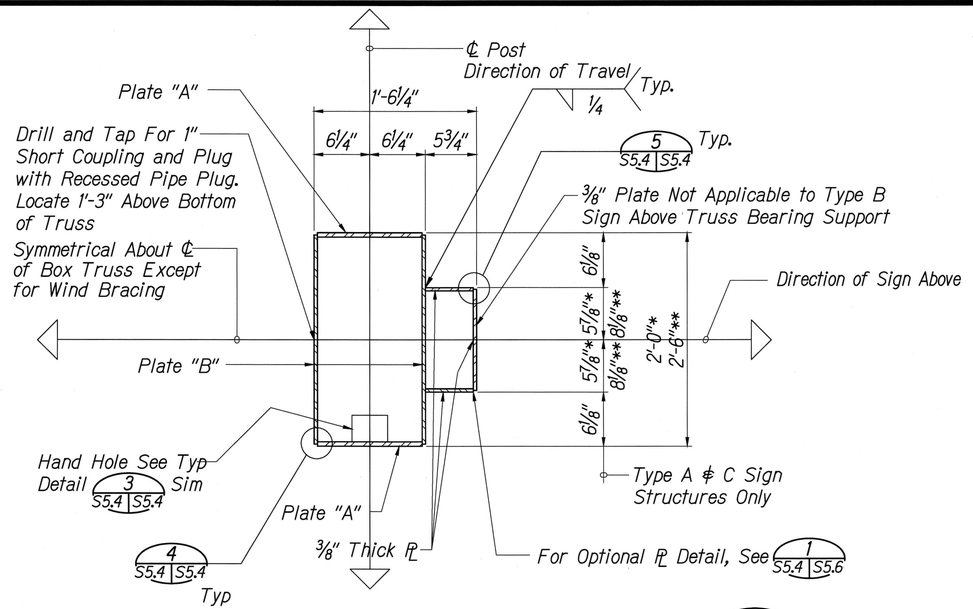

TYPICAL COLUMN SECTION ABOVE BEARING SUPPORT 1
Not to Scale — S6.1, S7.1, S8.1 | S5.4

* For "W" = 2'-0"
** For "W" = 2'-6"
"W" = wind bracing support. See Table on sheet S6.2, S7.2 and S8.2.

Note:
For balance of information, see 4 S5.4 | S5.6

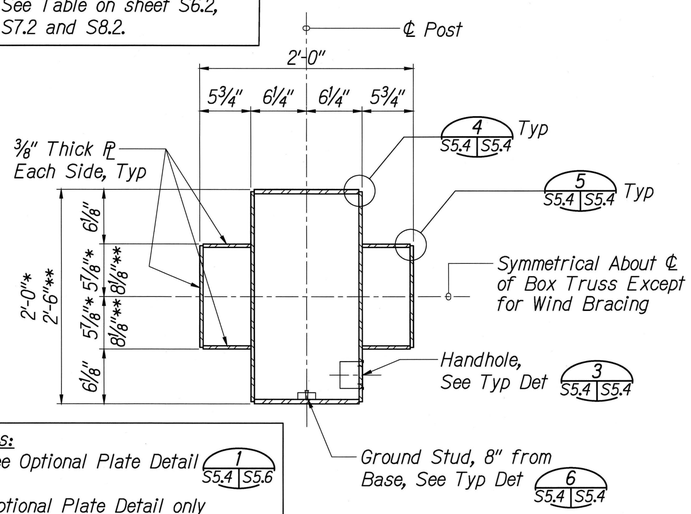

Notes:
1. See Optional Plate Detail 1 S5.4 | S5.6
2. Optional Plate Detail only applies for 3/8" thick PL.

TYPICAL COLUMN SECTION BELOW BEARING SUPPORT 2
Not to Scale — S6.1, S7.1, S8.1 | S5.4

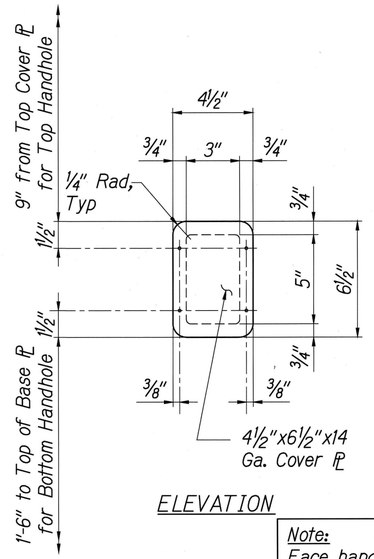

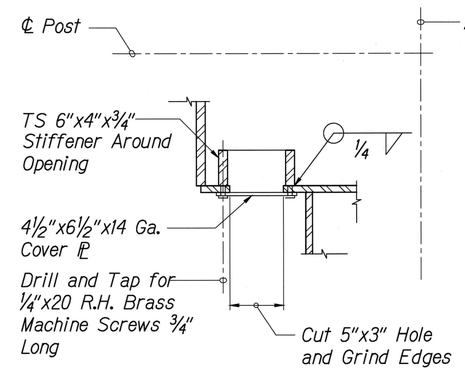

ELEVATION — SECTION

Note:
Face handhole and cover plate away from travelway except as shown. Submit location to Engineer for approval.

TYPICAL HANDHOLE AND COVER PLATE DETAIL 3
Not to Scale — S5.4 | S5.4

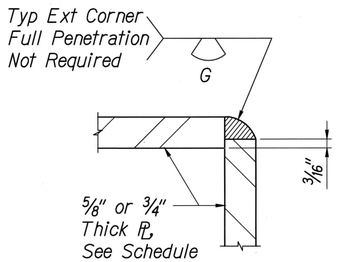

CONN. DETAIL 4
Not to Scale — S5.4 | S5.4

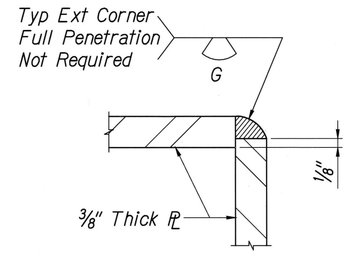

CONN. DETAIL 5
Not to Scale — S5.4 | S5.4

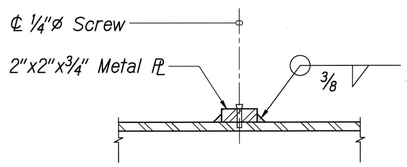

TYPICAL GROUND STUD DETAIL 6
Not to Scale — S5.4 | S5.4

KEN KAZUO HAYASHIDA
LICENSED PROFESSIONAL ENGINEER
No. 6818-S
HAWAII, U.S.A.

EXPIRATION DATE OF THE LICENSE 4/30/2018
THIS WORK WAS PREPARED BY ME OR UNDER MY SUPERVISION

STATE OF HAWAII
DEPARTMENT OF TRANSPORTATION
HIGHWAYS DIVISION

TYPICAL ANCHORAGE DETAILS - 1

INTERSTATE ROUTE H-1, H-2 AND H201
DESTINATION SIGN UPGRADE / REPLACEMENT, PHASE 2
Federal Aid Project NO. - NH-IM-0300(142)
Scale: As Shown — Date: May 2016

SHEET No. S5.4 OF 191 SHEETS

P:\Drafting\2016-07-21_2239 Dot H1 H2 Signs Phase 2\20_2239_S5-04.dwg, 10/6/2016 7:33:29 AM, tamanaha

FED. ROAD DIST. NO.	STATE	FED. AID PROJ. NO.	FISCAL YEAR	SHEET NO.	TOTAL SHEETS
HAWAII	HAW.	NH-IM-0300(142)	2016	51	191

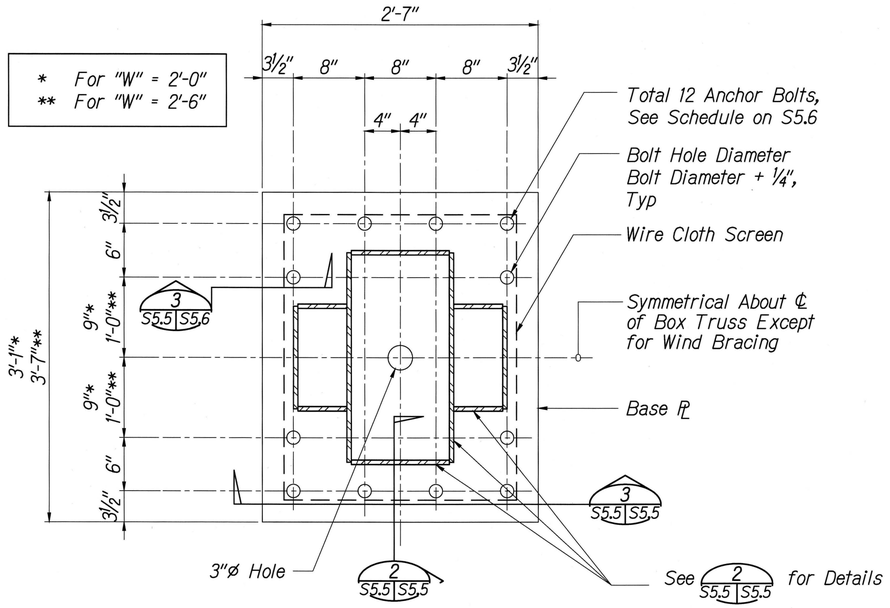

PLAN

Notes:
1. Anchor plate may be retained with hex nut or formed head.
2. "W" = Wind bracing width, see table on sheet S6.2, S7.2 and S8.2.

TYPICAL BASE PLATE DETAIL 1
Not to Scale — S6.1, S7.1, S8.1 | S5.5

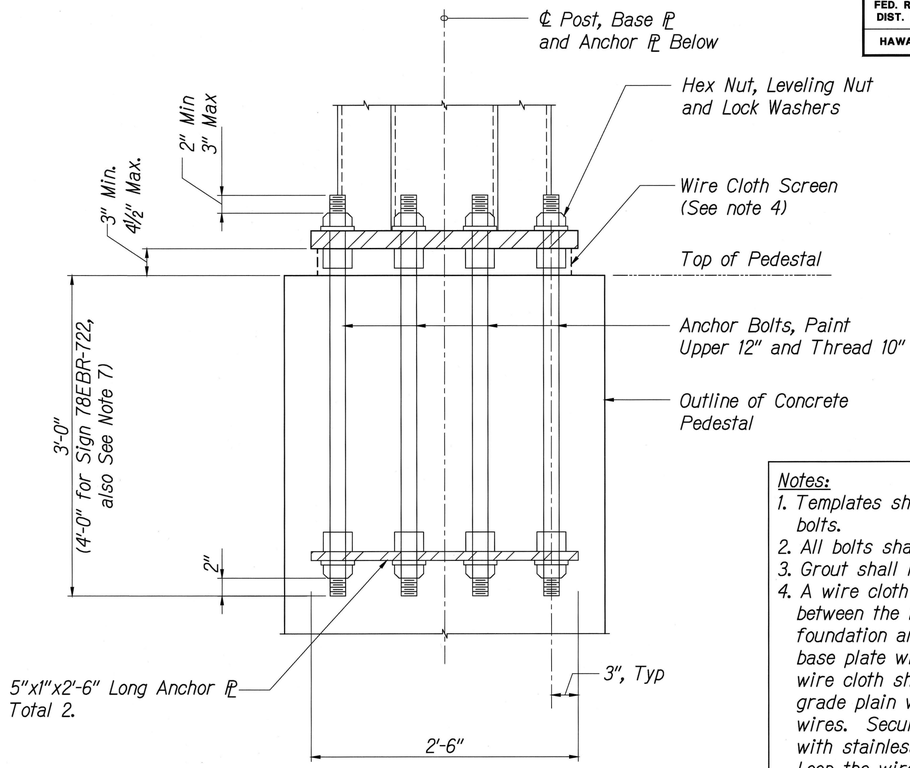

ELEVATION

Notes:
1. Templates shall be used to correctly align the bolts.
2. All bolts shall be vertical.
3. Grout shall not be placed under base plate.
4. A wire cloth screen shall be placed vertically between the base plate and the top of the foundation and wrapped horizontally around the base plate with a 3 inches maximum lap. The wire cloth shall be galvanized steel standard grade plain weave 2X2 mesh 0.063 inch diameter wires. Secure the wire cloth at the lapped ends with stainless steel wire ties (min. 2). Loop the wire ties and twist tie them securely. This is to prevent debris from getting under the plate.
5. Plumbness of anchor bolts: See Note 6.L on sheet S3.2. If the anchor bolts are installed such that they are not plumb after pouring the concrete, the entire pedestal shall be removed and reconstructed.
6. After erection of sign structure is complete, apply complete paint system to anchor bolts and nuts, including below the base plate.
7. For Sign H1EB-308 and Sign H1WB-424, at where the new concrete pedestal on drilled shaft foundations, the anchor bolts shall be extended into the drilled shaft pedestal (see detail 2/S5.2)

TYPICAL ANCHORAGE DETAIL 3
Not to Scale — S5.5 | S5.5

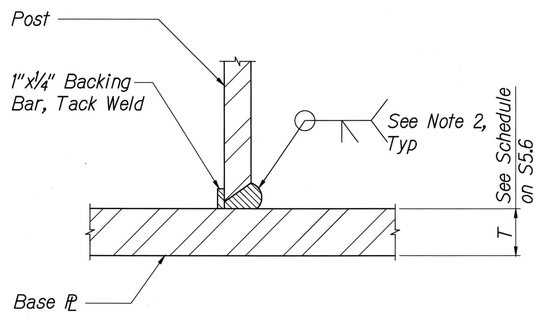

Notes:
1. For Base Plate, Anchor Bolt Schedule, See 4 S5.5 | S5.6
2. Weld size shall Match PL thickness, for balance of PL A or B information, See 4 S5.5 | S5.6

TYPICAL POST TO BASE PLATE WELDING DETAIL 2
Not to Scale — S5.5 | S5.5

KEN KAZUO HAYASHIDA
LICENSED PROFESSIONAL ENGINEER
No. 6818-S
HAWAII, U.S.A.

EXPIRATION DATE OF THE LICENSE 4/30/2018
THIS WORK WAS PREPARED BY ME OR UNDER MY SUPERVISION

STATE OF HAWAII
DEPARTMENT OF TRANSPORTATION
HIGHWAYS DIVISION

TYPICAL ANCHORAGE DETAILS - 2

INTERSTATE ROUTE H-1, H-2 AND H201
DESTINATION SIGN UPGRADE / REPLACEMENT, PHASE 2
Federal Aid Project NO. - NH-IM-0300(142)
Scale: As Shown Date: May 2016

SHEET No. S5.5 OF 191 SHEETS

P:\Drafting\2016-07-21_2239 Dot H1 H2 Signs Phase 2\21_2239_S5-05.dwg, 10/6/2016 7:33:31 AM, tamanaha

FED. ROAD DIST. NO.	STATE	FED. AID PROJ. NO.	FISCAL YEAR	SHEET NO.	TOTAL SHEETS
HAWAII	HAW.	NH-IM-0300(142)	2016	52	191

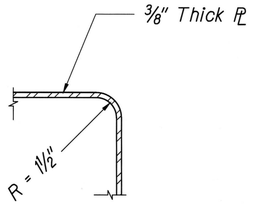

OPTIONAL PLATE DETAIL — 1 (S5.4 | S5.6)
Not to Scale

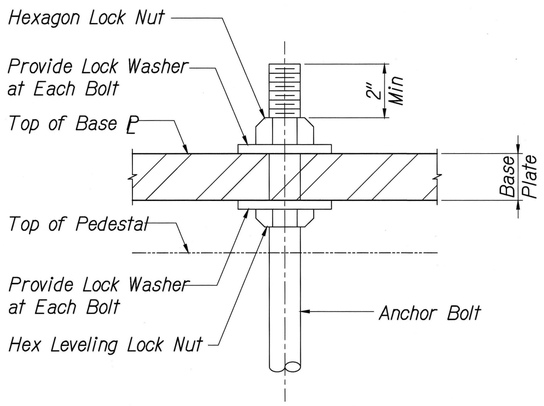

TYPICAL BASE PLATE ANCHOR BOLT CONNECTION DETAIL — 2 (S5.6 | S5.6)
Not to Scale

SIGN POST, BASE PLATE AND ANCHOR BOLT SCHEDULE				
SIGN DESIGNATION	POST PLATE "A"	POST PLATE "B"	BASE PLATE "T"	ANCHOR BOLT
H1WB-424, H1WBR-451, H1WB-605, 78EBR-822, 78WBR-871	¾"	¾"	3"	(12) 2½"ø
ALL OTHERS	⅝"	⅝"	2"	(12) 1½"ø

SIGN POST, BASE PLATE AND ANCHOR BOLT SCHEDULE — 4 (S5.4, S5.5 | S5.6)
Not to Scale

KEN KAZUO HAYASHIDA
LICENSED PROFESSIONAL ENGINEER
No. 6818-S
HAWAII, U.S.A.

EXPIRATION DATE OF THE LICENSE 4/30/2018
THIS WORK WAS PREPARED BY ME OR UNDER MY SUPERVISION

STATE OF HAWAII
DEPARTMENT OF TRANSPORTATION
HIGHWAYS DIVISION

TYPICAL ANCHORAGE DETAILS - 3

INTERSTATE ROUTE H-1, H-2 AND H201
DESTINATION SIGN UPGRADE / REPLACEMENT, PHASE 2
Federal Aid Project NO. - NH-IM-0300(142)
Scale: As Shown Date: May 2016

SHEET No. S5.6 OF 191 SHEETS

P:\Drafting\2016-07-21_2239 Dot H1 H2 Signs Phase 2\22_2239_S5-06.dwg, 10/6/2016 7:33:33 AM, tamanaha

FED. ROAD DIST. NO.	STATE	FED. AID PROJ. NO.	FISCAL YEAR	SHEET NO.	TOTAL SHEETS
HAWAII	HAW.	NH-IM-0300(142)	2016	53	191

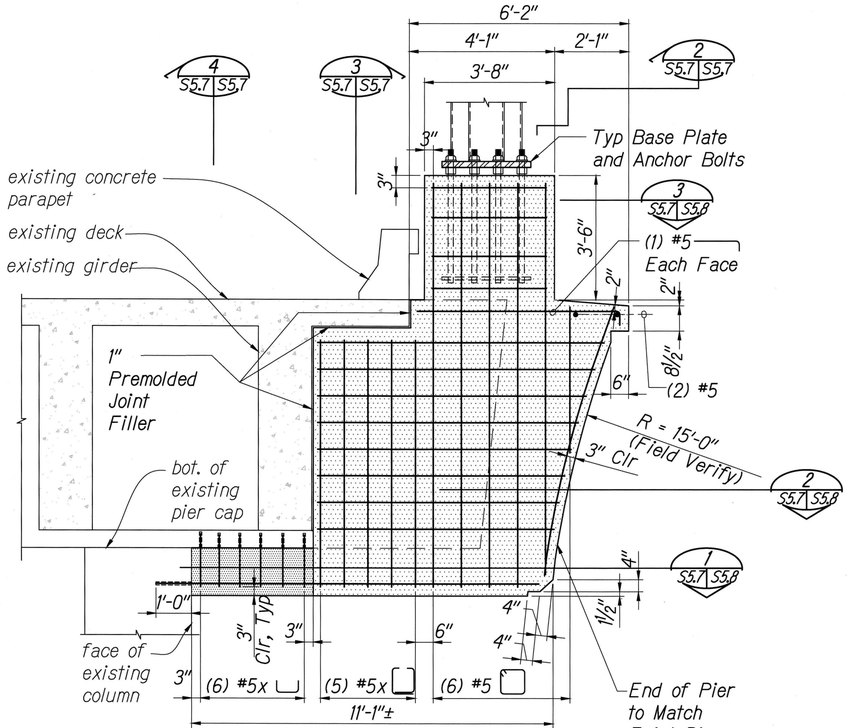

H1WB-402 SIGN STRUCTURE SUPPORT ELEVATION

Scale: 1/2" = 1'-0"

1 S4.5 S5.7

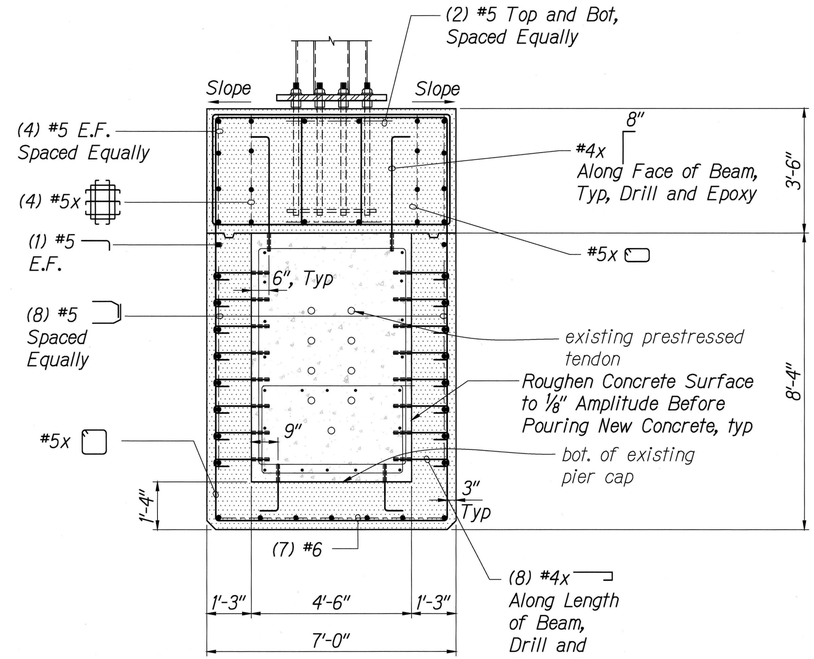

SECTION

Scale: 1/2" = 1'-0" S5.8, S5.7 S5.7

2

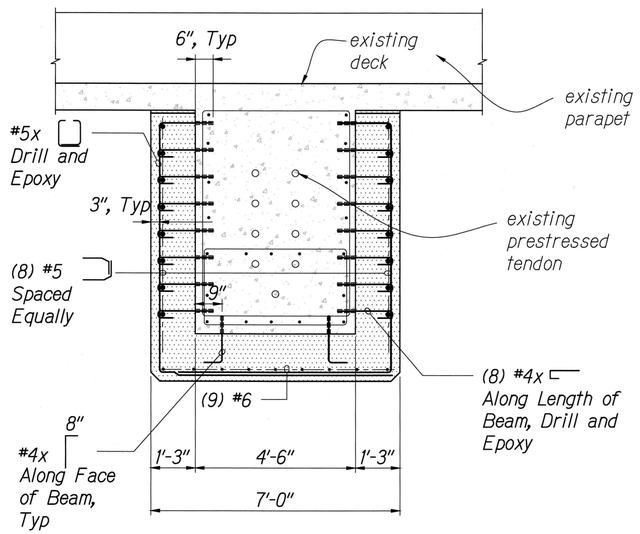

SECTION

Scale: 1/2" = 1'-0"

3 S5.7 S5.7

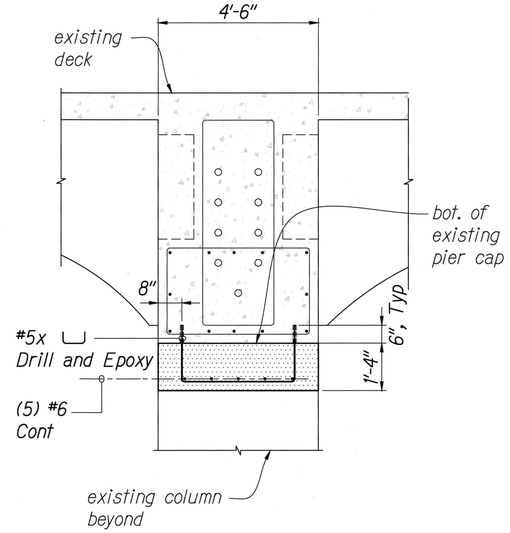

SECTION

Scale: 1/2" = 1'-0"

4 S5.7 S5.7

Note:

1. Contractor to Locate existing rebars prior to drilling for dowels.
2. No drilling into girders and/or bridge structural elements is allowed for temporary shoring/supports.
3. Anchoring adhesives (epoxy) shall be creep-resistant, See Note 6.F in Sht. S3.1.

KEN KAZUO HAYASHIDA
LICENSED PROFESSIONAL ENGINEER
No. 6818-S
HAWAII, U.S.A.

EXPIRATION DATE OF THE LICENSE 4/30/2018
THIS WORK WAS PREPARED BY ME OR UNDER MY SUPERVISION

STATE OF HAWAII
DEPARTMENT OF TRANSPORTATION
HIGHWAYS DIVISION

H1WB-402 SIGN POST ANCHORAGE DETAILS - 1

INTERSTATE ROUTE H-1, H-2 AND H201
DESTINATION SIGN UPGRADE / REPLACEMENT, PHASE 2
Federal Aid Project NO. - NH-IM-0300(142)

Scale: As Shown Date: May 2016

SHEET No. S5.7 OF 191 SHEETS

P:\Drafting\2016-07-21_2239 Dot H1 H2 Signs Phase 2\23_2239_S5-07.dwg, 10/6/2016 7:33:36 AM, tamanaha

FED. ROAD DIST. NO.	STATE	FED. AID PROJ. NO.	FISCAL YEAR	SHEET NO.	TOTAL SHEETS
HAWAII	HAW.	NH-IM-0300(142)	2016	54	191

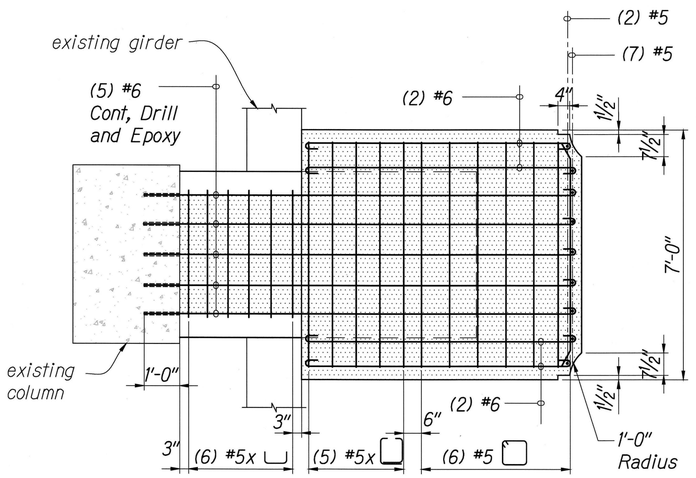

PLAN SECTION 1
Scale: 1/2" = 1'-0"
S5.7 | S5.8

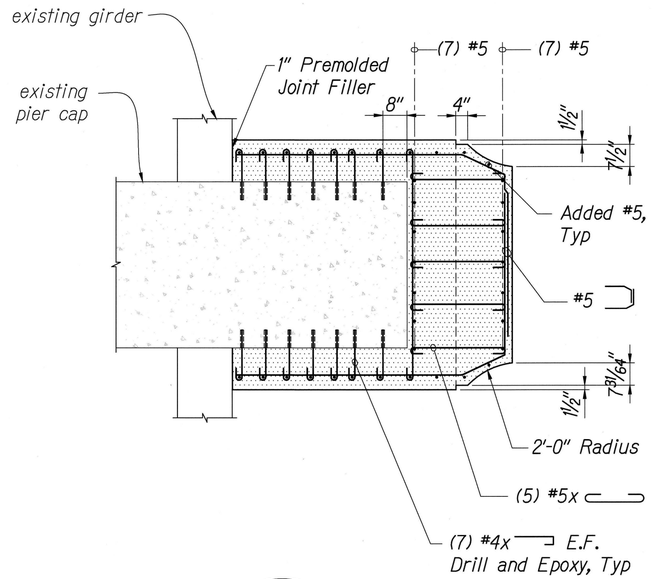

SECTION 2
Scale: 1/2" = 1'-0"
S5.7 | S5.8

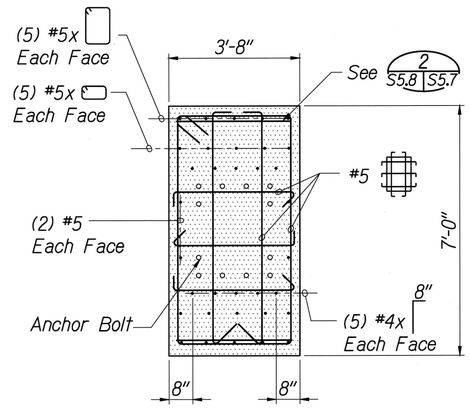

PLAN SECTION 3
Scale: 1/2" = 1'-0"
S5.7 | S5.8

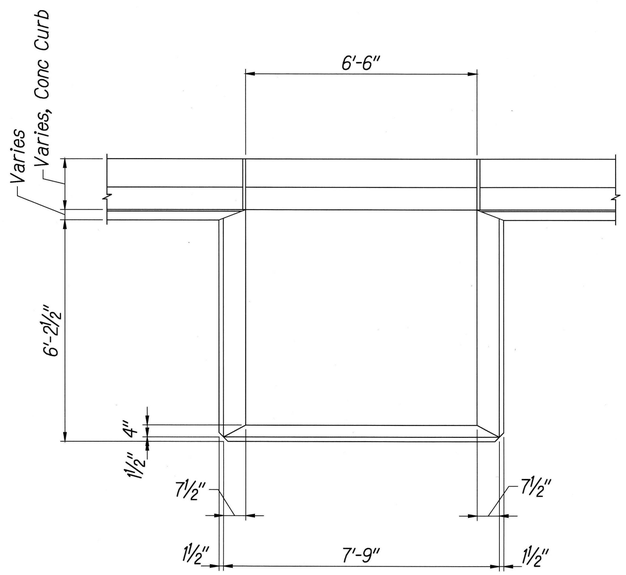

END CAP FRONT ELEVATION 4
Scale: 1/2" = 1'-0"
S5.8 | S5.8

Note:
1. Contractor to Locate existing rebars prior to drilling for dowels.
2. No drill into girders and/or bridge structural elements are allowed for temporary shoring/supports.
3. Anchoring adhesives (epoxy) shall be creep-resistant, See Note 6.F in Sht. S3.1.

KEN KAZUO HAYASHIDA
LICENSED PROFESSIONAL ENGINEER
No. 6818-S
HAWAII, U.S.A.

EXPIRATION DATE OF THE LICENSE 4/30/2018
THIS WORK WAS PREPARED BY ME OR UNDER MY SUPERVISION

STATE OF HAWAII
DEPARTMENT OF TRANSPORTATION
HIGHWAYS DIVISION

H1WB-402 SIGN POST ANCHORAGE DETAILS - 2

INTERSTATE ROUTE H-1, H-2 AND H201
DESTINATION SIGN UPGRADE / REPLACEMENT, PHASE 2
Federal Aid Project NO. - NH-IM-0300(142)
Scale: As Shown Date: May 2016

SHEET No. S5.8 OF 191 SHEETS

P:\Drafting\2016-07-21_2239 Dot H1 H2 Signs Phase 2\24_2239_S5-08.dwg, 10/6/2016 7:33:39 AM, tamanaha

FED. ROAD DIST. NO.	STATE	FED. AID PROJ. NO.	FISCAL YEAR	SHEET NO.	TOTAL SHEETS
HAWAII	HAW.	NH-IM-0300(142)	2016	55	191

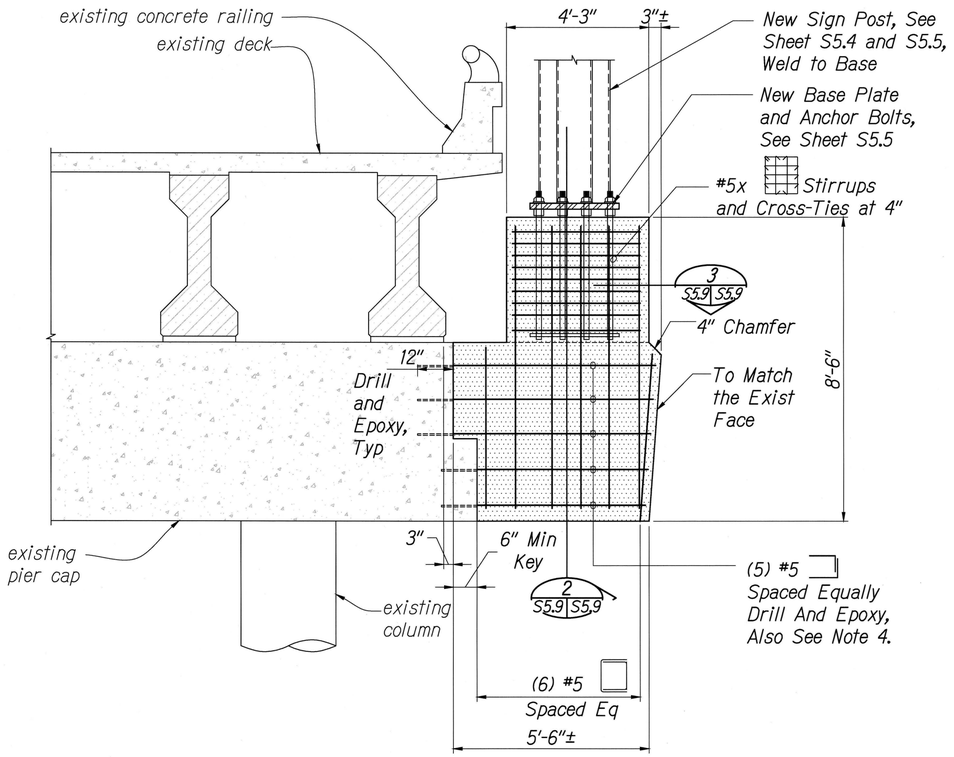

H1EB-112, H1EB-113, H1EB-114,
SIGN STRUCTURE SUPPORT ELEVATION 1
Scale: 1/2" = 1'-0" S4.1, S4.2, S4.3 | S5.9

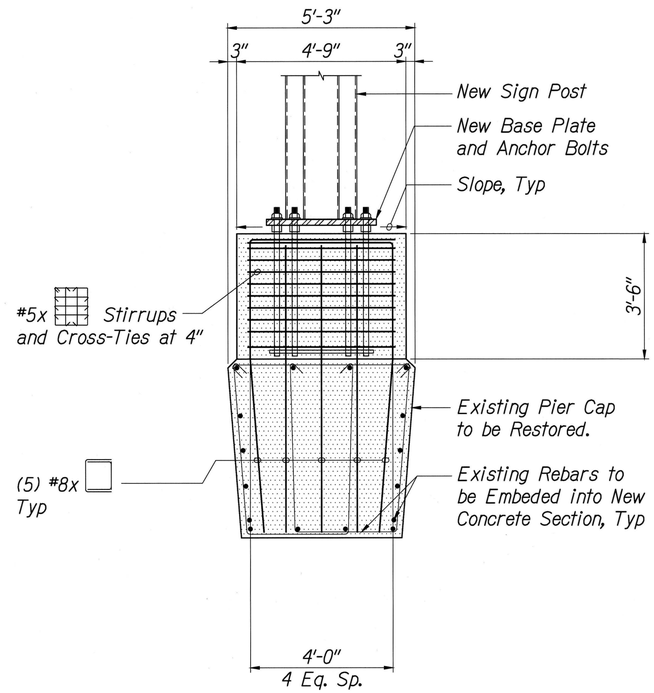

SECTION 2
Scale: 1/2" = 1'-0" S5.9 | S5.9

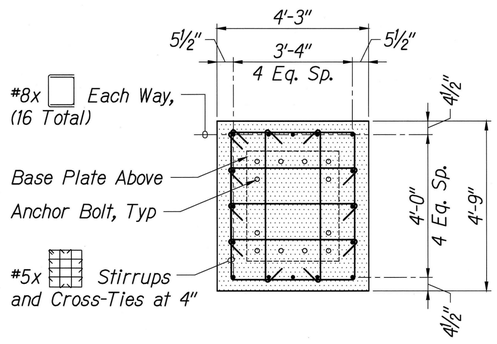

At H1EB-113

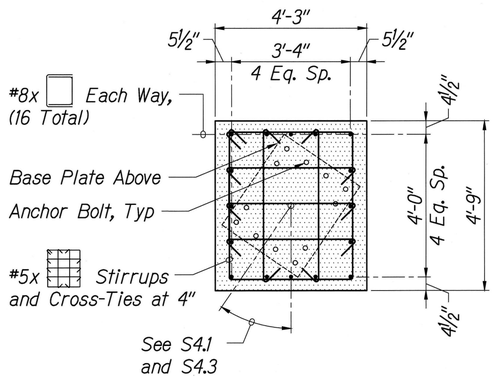

At H1EB-112, 114

PLAN SECTION 3
Scale: 1/2" = 1'-0" S5.9 | S5.9

Notes:
1. Contractor to Locate existing rebars prior to drilling for dowels.
2. No drill into girders and/or bridge structural elements are allowed for temporary shoring/supports.
3. Anchoring adhesives (epoxy) shall be creep-resistant, See Note 6.F in Sht. S3.1.
4. All existing rebars (not shown for clarity) in the pier caps shall be salvaged and embedded into new concrete section. Do not cut existing horizontal rebars. They shall be cleaned and included in new foundation.

KEN KAZUO HAYASHIDA
LICENSED PROFESSIONAL ENGINEER
No. 6818-S
HAWAII, U.S.A.

EXPIRATION DATE OF THE LICENSE 4/30/2018
THIS WORK WAS PREPARED BY ME OR UNDER MY SUPERVISION

STATE OF HAWAII
DEPARTMENT OF TRANSPORTATION
HIGHWAYS DIVISION

H1EB112, 113, 114 SIGN POST ANCHORAGE DETAILS

INTERSTATE ROUTE H-1, H-2 AND H201
DESTINATION SIGN UPGRADE / REPLACEMENT, PHASE 2
Federal Aid Project NO. - NH-IM-0300(142)
Scale: As Shown Date: May 2016
SHEET No. S5.9 OF 191 SHEETS

P:\Drafting\2016-07-21_2239 DOT H1 H2 Signs Phase 2\25_2239_S5-09.dwg, 10/6/2016 7:33:41 AM, tamahara

FED. ROAD DIST. NO.	STATE	FED. AID PROJ. NO.	FISCAL YEAR	SHEET NO.	TOTAL SHEETS
HAWAII	HAW.	NH-IM-0300(142)	2016	56	191

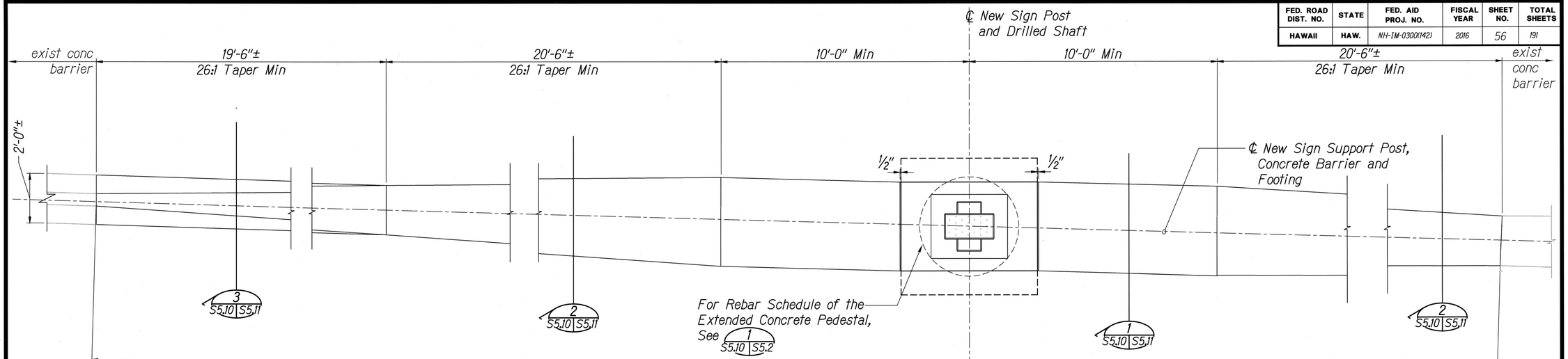

PLAN - CONCRETE BARRIER TRANSITION 1 S3.5, S4.4, S5.10 S5.10

Scale: 1/2" = 1'-0"

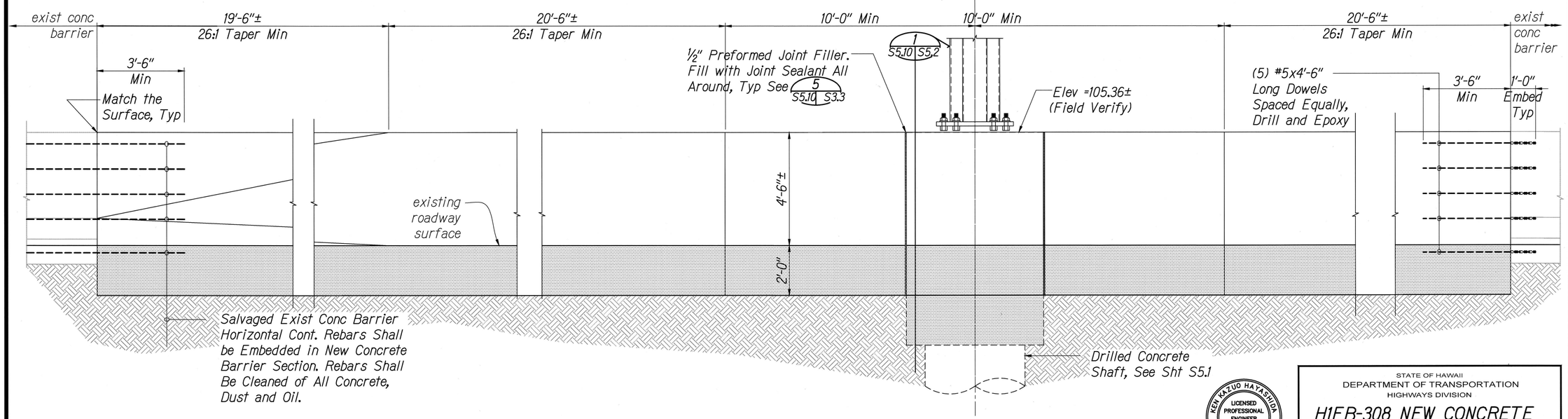

ELEVATION - CONCRETE BARRIER TRANSITION 2 S5.10 S5.10

Scale: 1/2" = 1'-0"

KEN KAZUO HAYASHIDA LICENSED PROFESSIONAL ENGINEER No. 6818-S HAWAII, U.S.A.

EXPIRATION DATE OF THE LICENSE 4/30/2018

THIS WORK WAS PREPARED BY ME OR UNDER MY SUPERVISION

STATE OF HAWAII
DEPARTMENT OF TRANSPORTATION
HIGHWAYS DIVISION

H1EB-308 NEW CONCRETE BARRIER PLAN & ELEV.

INTERSTATE ROUTE H-1, H-2 AND H201
DESTINATION SIGN UPGRADE / REPLACEMENT, PHASE 2
Federal Aid Project NO. - NH-IM-0300(142)

Scale: As Shown Date: May 2016

SHEET No. S5.10 OF 191 SHEETS

FED. ROAD DIST. NO.	STATE	FED. AID PROJ. NO.	FISCAL YEAR	SHEET NO.	TOTAL SHEETS
HAWAII	HAW.	NH-IM-0300(142)	2016	57	191

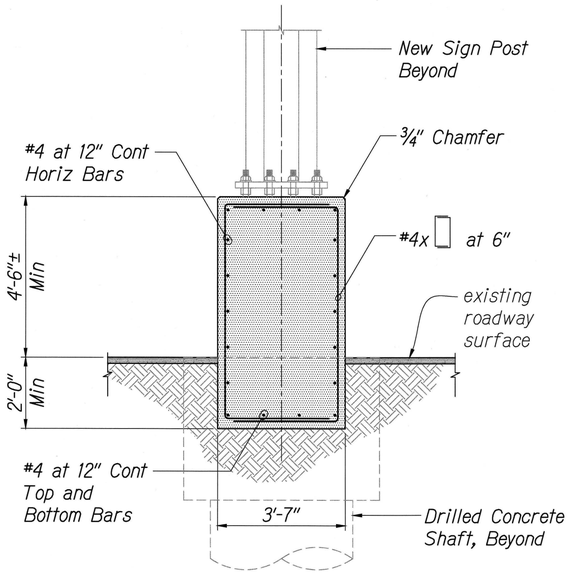

SECTION 1
Scale: 1/2" = 1'-0"
S5.10 | S5.11

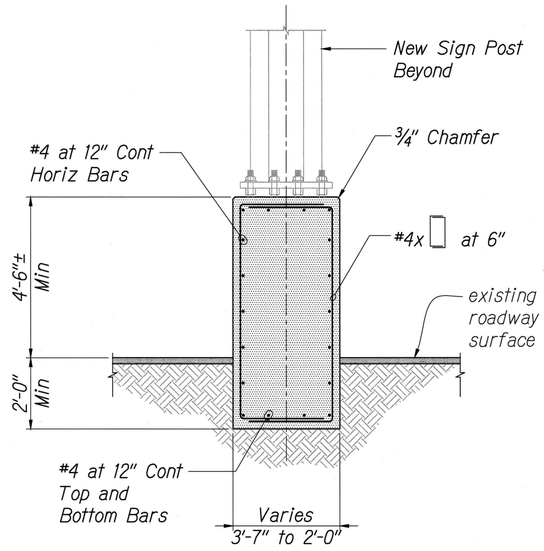

SECTION 2
Scale: 1/2" = 1'-0"
S5.10 | S5.11

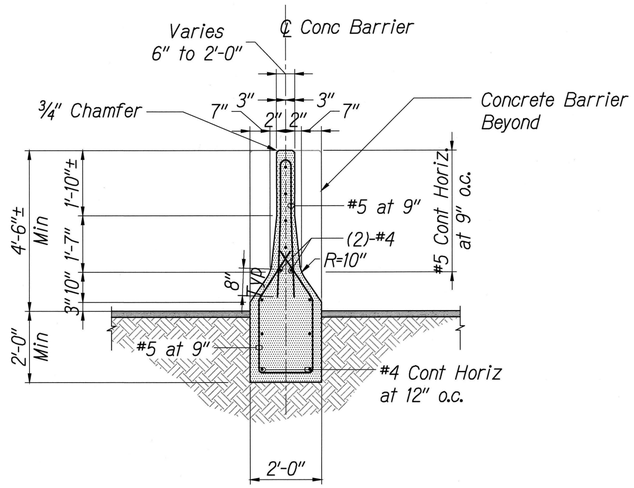

SECTION 3
Scale: 1/2" = 1'-0"
S5.10 | S5.11

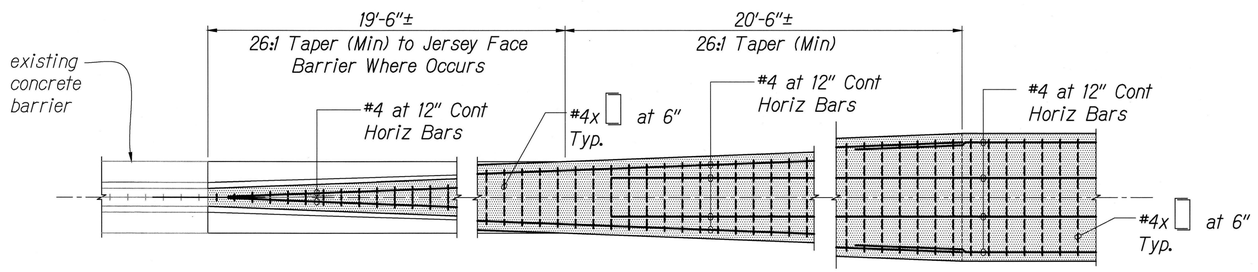

REBAR TRANSITION PLAN 4
Scale: 1/2" = 1'-0"
S5.11 | S5.11

KEN KAZUO HAYASHIDA
LICENSED PROFESSIONAL ENGINEER
No. 6818-S
HAWAII, U.S.A.

EXPIRATION DATE OF THE LICENSE 4/30/2018
THIS WORK WAS PREPARED BY ME OR UNDER MY SUPERVISION

STATE OF HAWAII
DEPARTMENT OF TRANSPORTATION
HIGHWAYS DIVISION

H1EB-308 NEW CONCRETE BARRIER DETAILS

INTERSTATE ROUTE H-1, H-2 AND H201
DESTINATION SIGN UPGRADE / REPLACEMENT, PHASE 2
Federal Aid Project NO. - NH-IM-0300(142)
Scale: As Shown Date: May 2016

SHEET No. S5.11 OF 191 SHEETS

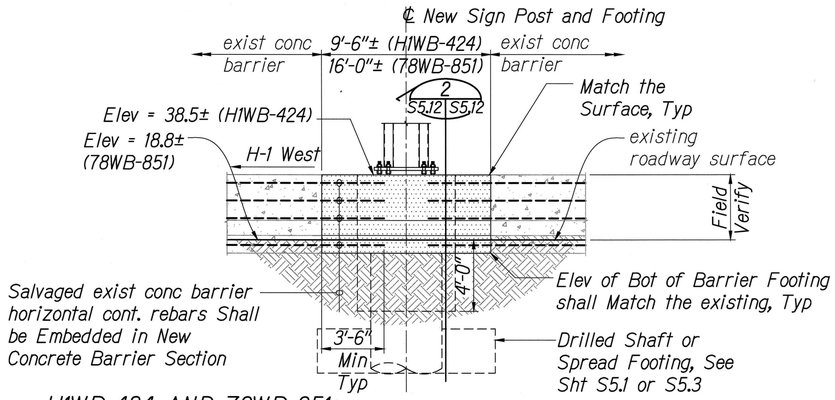

H1WB-424 AND 78WB-851
RESTORE CONCRETE BARRIER - ELEVATION VIEW — 1 — S4.7, S4.11 | S5.12

Scale: 1/4" = 1'-0"

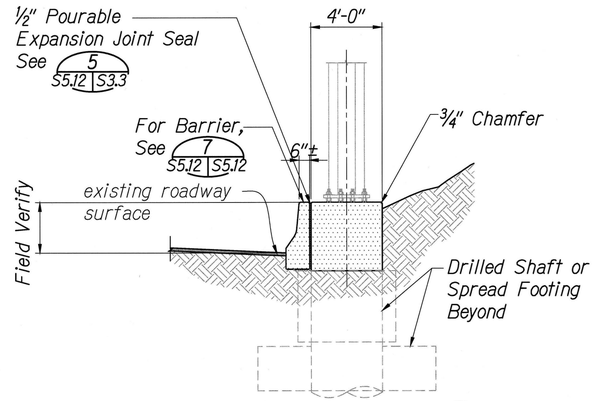

SECTION — 2 — 5.12 | S5.12

Scale: 1/4" = 1'-0"

FED. ROAD DIST. NO.	STATE	FED. AID PROJ. NO.	FISCAL YEAR	SHEET NO.	TOTAL SHEETS
HAWAII	HAW.	NH-IM-0300(142)	2016	58	191

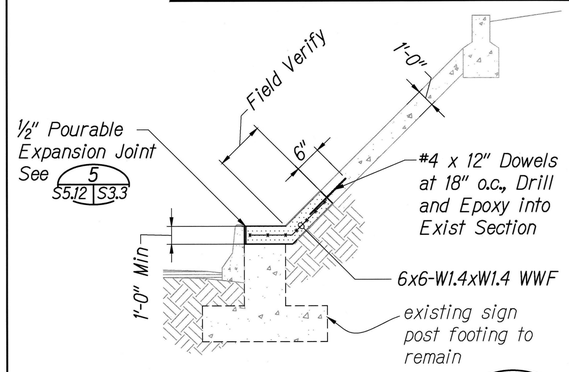

H1WB-424 - REPAIR SLAB — 3 — S4.7 | S5.12

Scale: 1/4" = 1'-0"

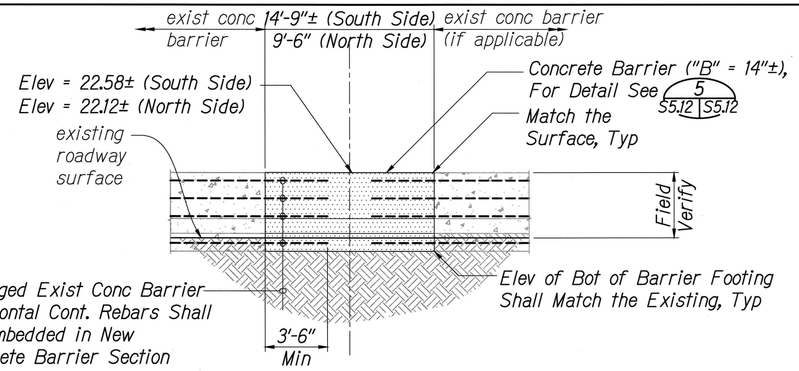

78EBR-822 - RESTORE CONCRETE BARRIER - ELEVATION VIEW — 4 — S4.10 | S5.12

Scale: 1/4" = 1'-0"

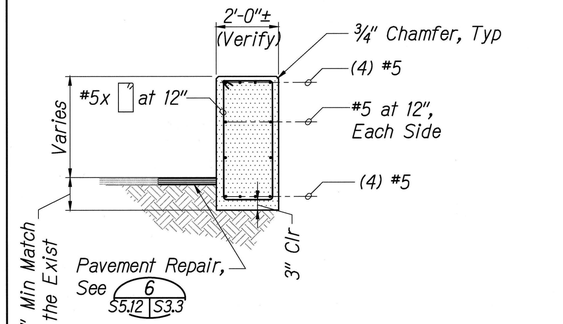

CONCRETE BARRIER DETAIL — 5 — S5.12 | S5.12

Scale: 1/4" = 1'-0"

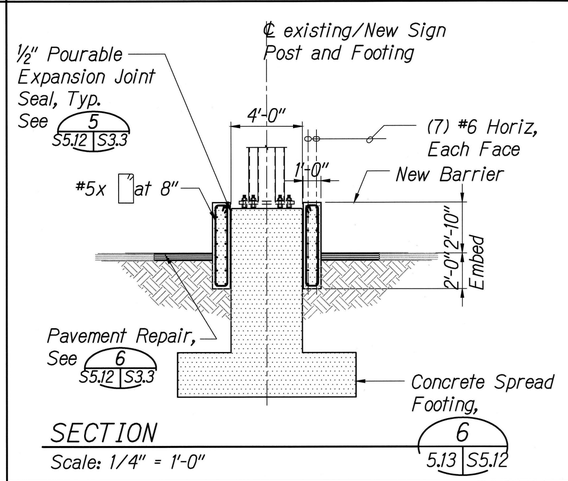

SECTION — 6 — 5.13 | S5.12

Scale: 1/4" = 1'-0"

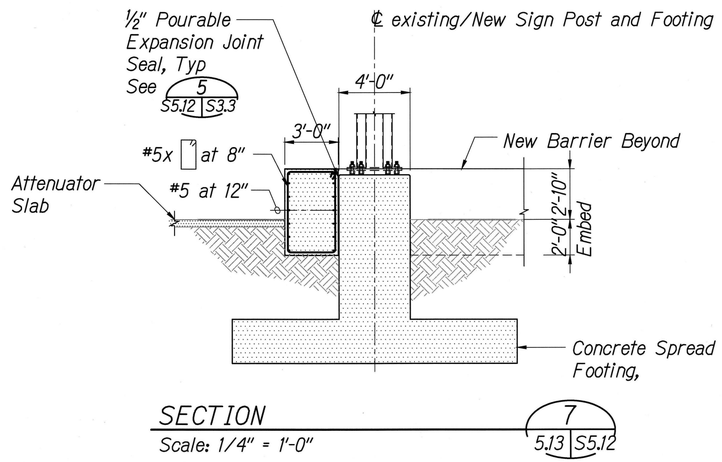

SECTION — 7 — 5.13 | S5.12

Scale: 1/4" = 1'-0"

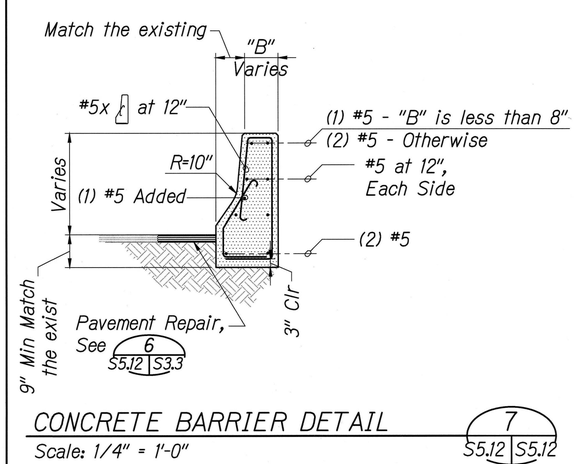

CONCRETE BARRIER DETAIL — 7 — S5.12 | S5.12

Scale: 1/4" = 1'-0"

KEN KAZUO HAYASHIDA
LICENSED PROFESSIONAL ENGINEER
No. 6818-S
HAWAII, U.S.A.

EXPIRATION DATE OF THE LICENSE 4/30/2018
THIS WORK, WAS PREPARED BY ME OR UNDER MY SUPERVISION

STATE OF HAWAII
DEPARTMENT OF TRANSPORTATION
HIGHWAYS DIVISION

RESTORATION OF CONCRETE BARRIER AND MISC. DETAILS

INTERSTATE ROUTE H-1, H-2 AND H201
DESTINATION SIGN UPGRADE / REPLACEMENT, PHASE 2
Federal Aid Project NO. - NH-IM-0300(142)
Scale: As Shown Date: May 2016

SHEET No. S5.12 OF 191 SHEETS

P:\Drafting\2016-07-21_2239 Dot H1, H2 Signs Phase 2\27_2239_S5-12.dwg, 10/6/2016 7:33:46 AM, tamanaha

FED. ROAD DIST. NO.	STATE	FED. AID PROJ. NO.	FISCAL YEAR	SHEET NO.	TOTAL SHEETS
HAWAII	HAW.	NH-IM-0300(142)	2016	59	191

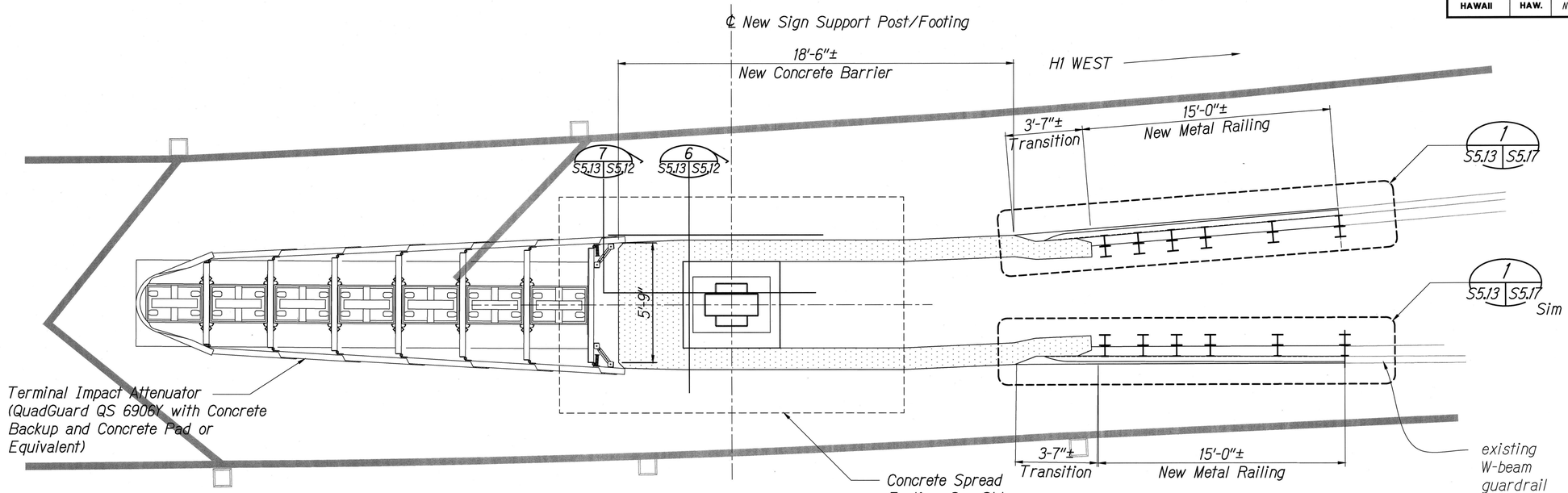

H1WBR-451 NEW CONCRETE BARRIER AND METAL GUARDRAIL - PLAN VIEW

1 / S4.8, S5.13 | S5.13

Scale: 3/8" = 1'-0"

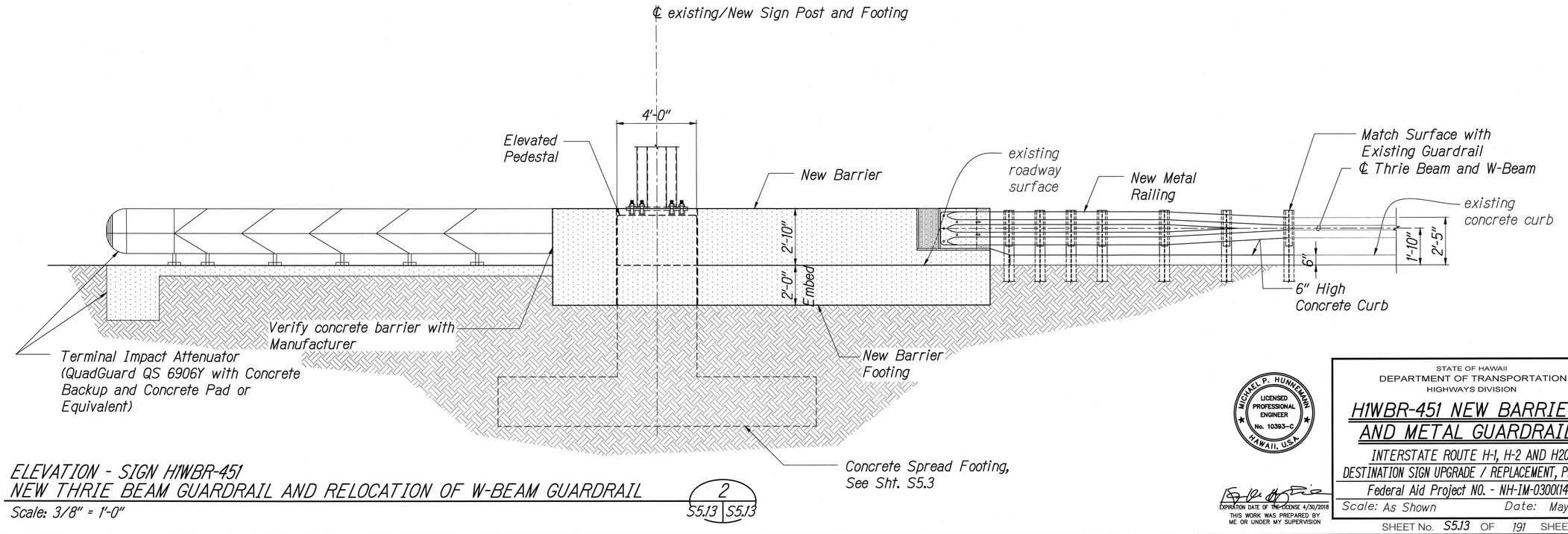

ELEVATION - SIGN H1WBR-451
NEW THRIE BEAM GUARDRAIL AND RELOCATION OF W-BEAM GUARDRAIL

2 / S5.13 | S5.13

Scale: 3/8" = 1'-0"

MICHAEL P. HUNNEMANN
LICENSED PROFESSIONAL ENGINEER
No. 10393-C
HAWAII, U.S.A.

EXPIRATION DATE OF THE LICENSE 4/30/2018
THIS WORK WAS PREPARED BY ME OR UNDER MY SUPERVISION

STATE OF HAWAII
DEPARTMENT OF TRANSPORTATION
HIGHWAYS DIVISION

H1WBR-451 NEW BARRIERS AND METAL GUARDRAILS

INTERSTATE ROUTE H-1, H-2 AND H201
DESTINATION SIGN UPGRADE / REPLACEMENT, PHASE 2
Federal Aid Project NO. - NH-IM-0300(142)
Scale: As Shown Date: May 2016

SHEET No. S5.13 OF 191 SHEETS

P:\Drafting\2016-07-21_2239 Dot H1 H2 Signs Phase 2\28_2239_S5-13.dwg, 10/6/2016 7:33:49 AM, tamanaha

Notes:

1. The work necessary to connect Thrie Beam section, transition section and W-beam section guardrail to posts shall include all labor, materials, tools, equipment and incidentals necessary to complete the work and will not be paid for separately.
2. Lap rail element in direction of traffic to prevent snagging.
3. All anchor bolts shall be high strength bolts conforming to the requirements of ASTM 325 and Standard Specification, Section 713.04.
4. Anchor bolt length shall be such that a snug fit of the elements and full thread engagement plus 130 degree (max) is attained.
5. Thrie beam and "Transition Section" shall be fabricated from 10 gauge steel conforming to the requirements of AASHTO M 180, Type II, Class B.
6. All hardware, posts and fasteners shall be hot-dip zinc coated galvanized after fabrication. No punching, drilling or cutting will be permitted after galvanizing.
7. Where conditions require, special post lengths in increments of 6 inches may be specified.
8. All fasteners, posts, and rail elements shall conform to the latest edition and amendments of "A Guide to Standardized Highway Barrier Rail Hardware," a report prepared and approved by the AASHTO-AGC-ARTBA Joint Cooperative Committee, Subcommittee On New Highway Materials, Task Force 13 Report. Dimensions of fastners, posts and rail elements have been converted from metric units into their present form.
9. Heads of through anchor bolts shall be placed on the traffic side of the rail.
10. All steel shapes, rails and plates shall conform to ASTM A 36 specifications.
11. After the guardrail posts are installed in the paved area, the Contractor shall grout around the guardrail post and seal all cracks in the paved area that was caused during the guardrail post installation. If required by the inspector/Engineer, the contractor shall tamper the paved area around the guardrail post prior to grouting. The cost for this work shall not be paid for separately, but shall be considered incidental to the various guardrail items.

FED. ROAD DIST. NO.	STATE	FED. AID PROJ. NO.	FISCAL YEAR	SHEET NO.	TOTAL SHEETS
HAWAII	HAW.	NH-IM-0300(142)	2016	60	191

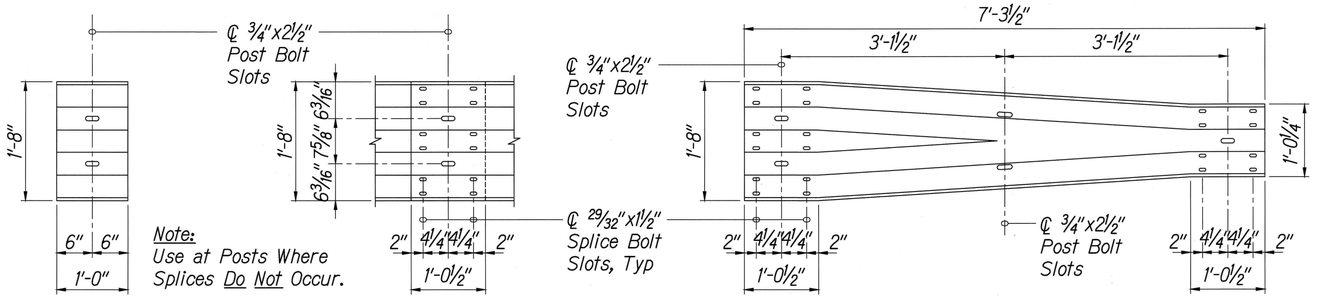

ELEVATION - BACKUP PLATE ELEVATION - RAIL SPLICE ELEVATION - TRANSIT SECTION

TYPICAL STRONG POST THRIE BEAM GUARDRAIL DETAILS

1 | S5.14 | S5.14

Scale: 1/2" = 1'-0"

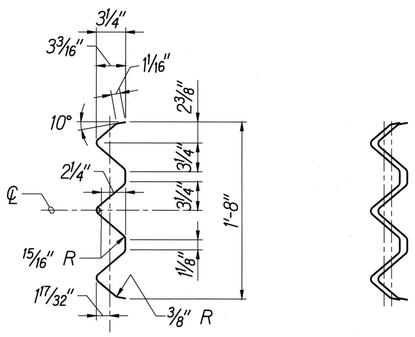

SINGLE DOUBLE

SECTION THRU RAIL ELEMENT (THRIE BEAM)

2 | S5.14 | S5.14

Not to Scale

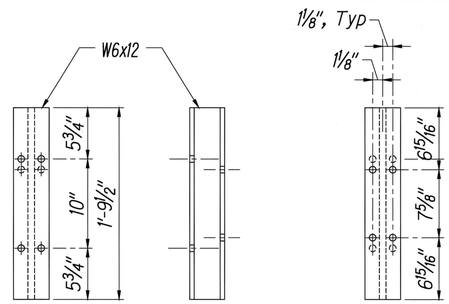

BACK SIDE FRONT

SPACER BLOCK

3 | S5.14 | S5.14

Not to Scale

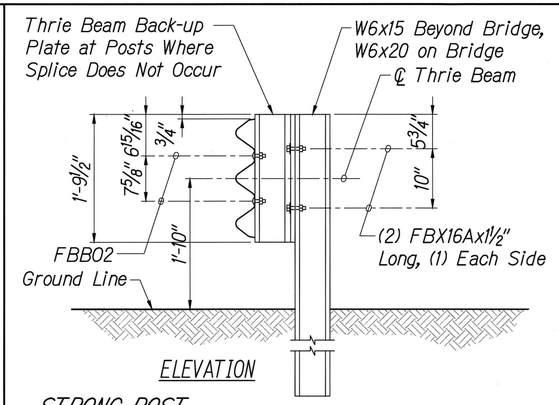

ELEVATION

STRONG POST THRIE BEAM GUARDRAIL

4 | S5.14 | S5.14

Not to Scale

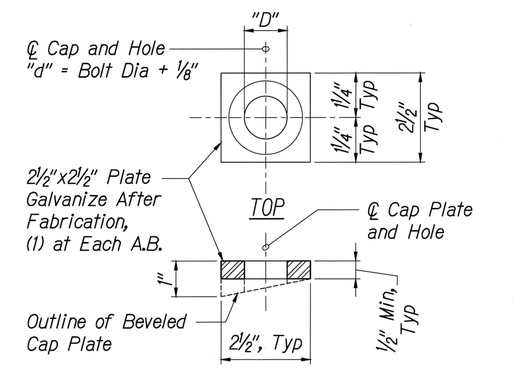

SECTION

CAP (BEARING) PLATE DETAIL

5 | S5.14 | S5.14

Not to Scale

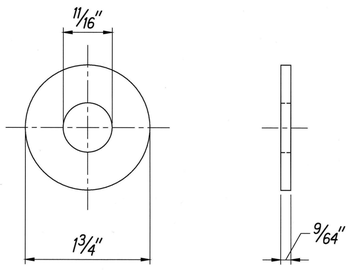

STEEL WASHER FOR 5/8" BOLT

6 | S5.14 | S5.14

Not to Scale

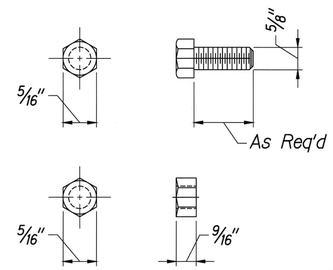

HEX BOLT AND NUT (FBX16a)

7 | S5.14 | S5.14

Not to Scale

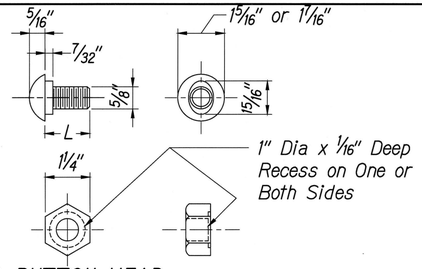

5/8" DIA BUTTON HEAD BOLT AND RECESS NUT

8 | S5.14 | S5.14

Not to Scale

L	Thread Length
1 1/4"	Full Thread
2"	1 1/2" Min Thread Length

KEN KAZUO HAYASHIDA LICENSED PROFESSIONAL ENGINEER No. 6818-S HAWAII, U.S.A.

EXPIRATION DATE OF THE LICENSE 4/30/2018
THIS WORK WAS PREPARED BY ME OR UNDER MY SUPERVISION

STATE OF HAWAII
DEPARTMENT OF TRANSPORTATION
HIGHWAYS DIVISION

GUARDRAIL NOTES THRIE-BEAM DETAILS

INTERSTATE ROUTE H-1, H-2 AND H201
DESTINATION SIGN UPGRADE / REPLACEMENT, PHASE 2
Federal Aid Project NO. - NH-IM-0300(142)
Scale: As Shown Date: May 2016

SHEET No. S5.14 OF 191 SHEETS

P:\Drafting\2016-07-21_2239 DOT H1 H2 Signs Phase 2\29_2239_S5-14_S5-15_S5-16.dwg, 10/6/2016 7:33:51 AM, tamanaha

FED. ROAD DIST. NO.	STATE	FED. AID PROJ. NO.	FISCAL YEAR	SHEET NO.	TOTAL SHEETS
HAWAII	HAW.	NH-IM-0300(142)	2016	61	191

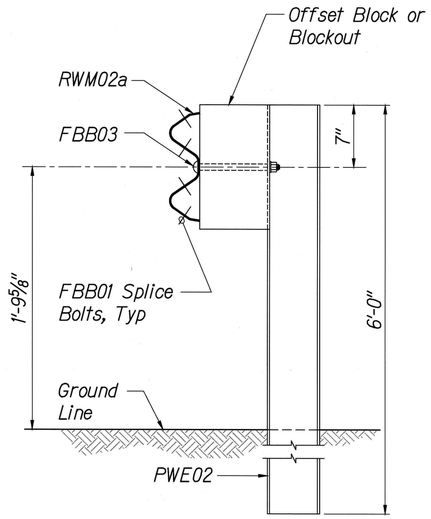

ELEVATION

STRONG POST
W-BEAM GUARDRAIL

1
S5.15 | S5.15

Not to Scale

Note:
All Holes are ¾" Dia.

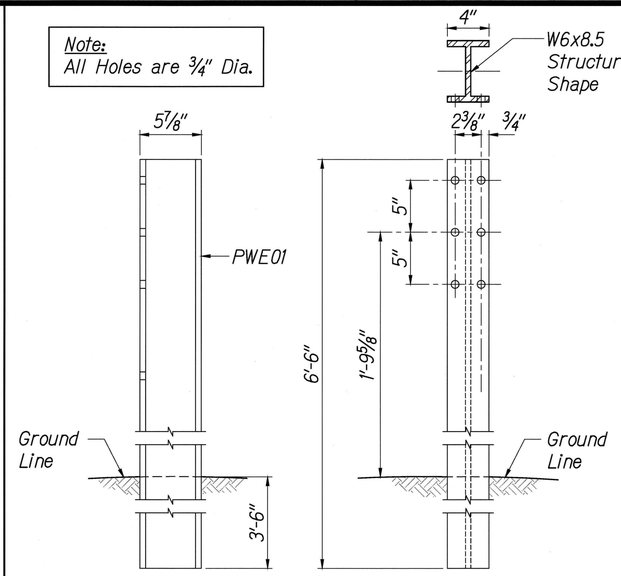

SIDE FRONT

W-BEAM STRONG POST (PWE01)

2
S5.15 | S5.15

Not to Scale

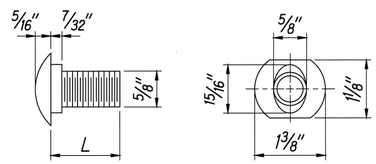

Designator	L
FBB01	1⅜"
FBB02	2"
FBB03	10"

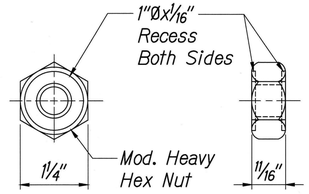

GUARDRAIL BOLTS
AND RECESSED NUTS

3
S5.15 | S5.15

Not to Scale

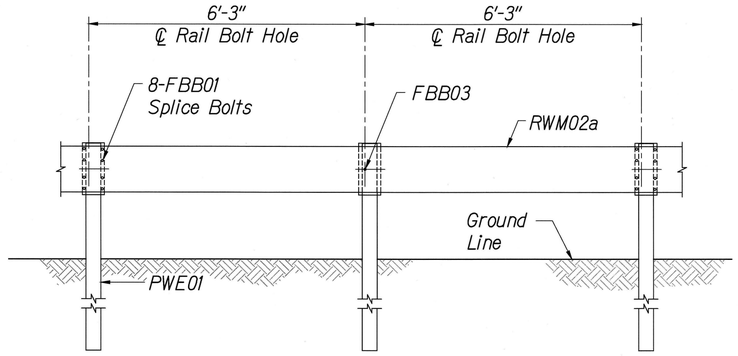

ELEVATION

STRONG POST W-BEAM GUARDRAIL WITH
RECYCLED OFFSET BLOCK OR PLASTIC BLOCKOUT

5
S5.15 | S5.15

Not to Scale

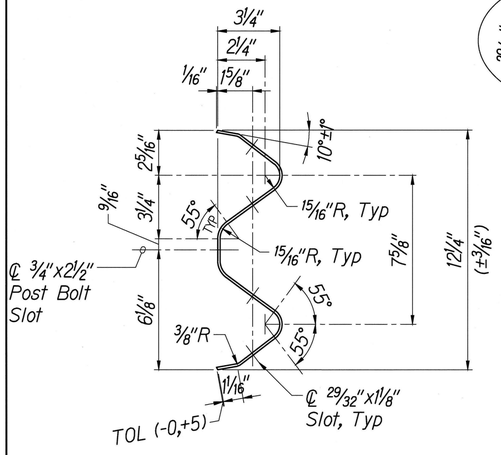

Designator	Base Metal Thickness
RWM02a	12 Gauge

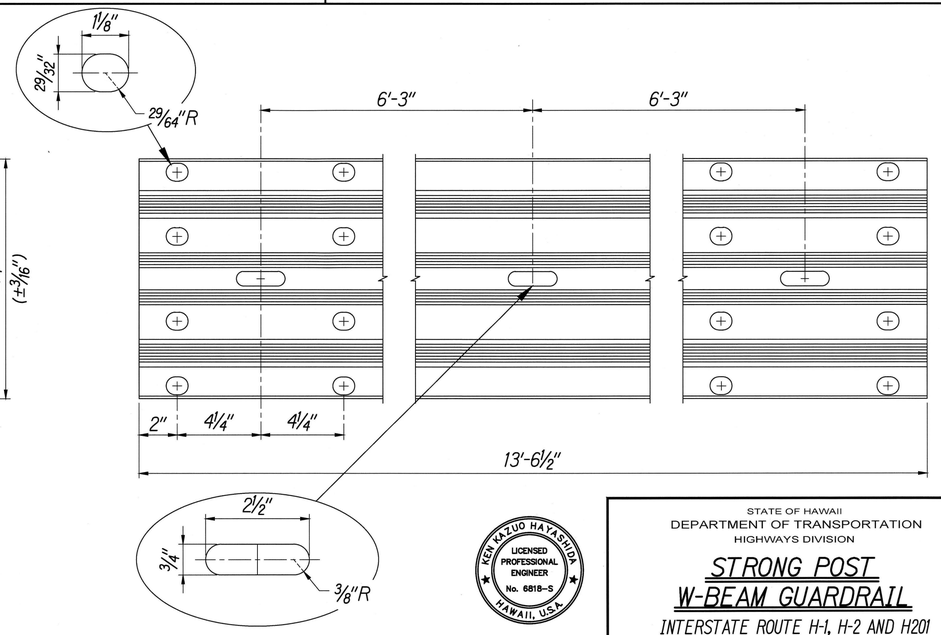

2 SPACE W-BEAM GUARDRAIL (RWM02b)

6
S5.15 | S5.15

Not to Scale

KEN KAZUO HAYASHIDA
LICENSED PROFESSIONAL ENGINEER
No. 6818-S
HAWAII, U.S.A.

EXPIRATION DATE OF THE LICENSE 4/30/2018
THIS WORK WAS PREPARED BY ME OR UNDER MY SUPERVISION

STATE OF HAWAII
DEPARTMENT OF TRANSPORTATION
HIGHWAYS DIVISION

STRONG POST
W-BEAM GUARDRAIL

INTERSTATE ROUTE H-1, H-2 AND H201
DESTINATION SIGN UPGRADE / REPLACEMENT, PHASE 2
Federal Aid Project NO. - NH-IM-0300(142)

Scale: As Shown Date: May 2016

SHEET No. S5.15 OF 191 SHEETS

D:\Drafting\2016-07-21_2239 Dot H1 H2 Signs Phase 2\29_2239_S5-14_S5-15_S5-16.dwg, 10/6/2016 7:33:52 AM, tamanaha

FED. ROAD DIST. NO.	STATE	FED. AID PROJ. NO.	FISCAL YEAR	SHEET NO.	TOTAL SHEETS
HAWAII	HAW.	NH-IM-0300(142)	2016	62	191

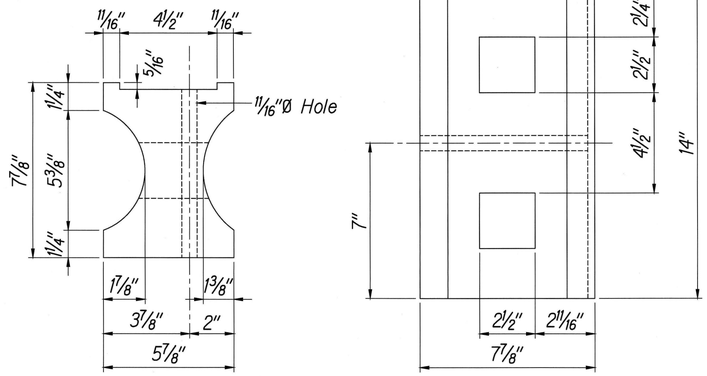

TOP SIDE

RECYCLED PLASTIC BLOCKOUT (TYPE I)

Not to Scale

1 S5.16 | S5.16

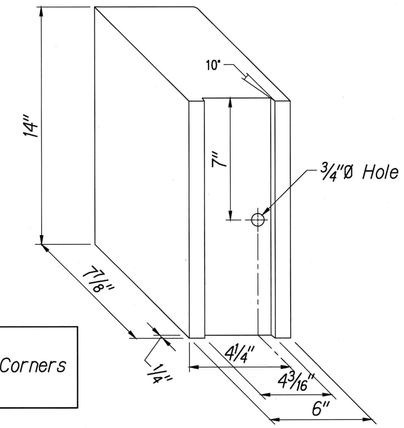

Note:
All Exterior Corners ½" Radius.

RECYCLED POLYETHELENE OFFSET BLOCK (TYPE II)

Not to Scale

2 S5.16 | S5.16

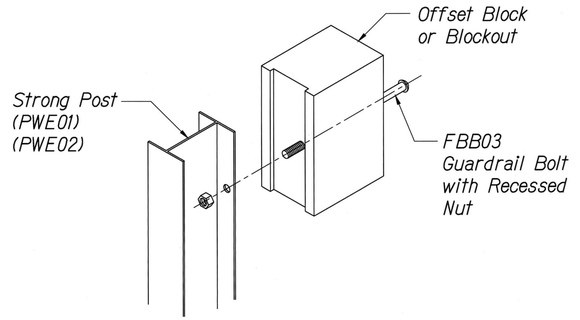

EXPLODED VIEW
(Rail and Washer Not Shown)

STEEL POST AND BLOCK DETAIL

Not to Scale

3 S5.16 | S5.16

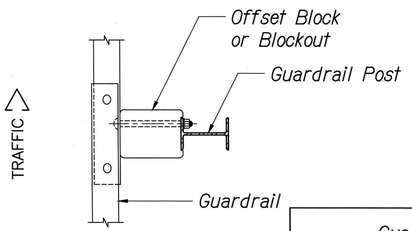

PLAN VIEW

Guardrail Type	Dimension	
	H	A
Strong Post W-Beam	1'-9⅝"	1'-6"
Strong Post Rubrail (W-Beam)	2'-0"	1'-6"
Strong Post Thrie-Beam	1'-9⅝"	1'-6"
Strong Post Modified Thrie Beam	2'-0"	2'-0"

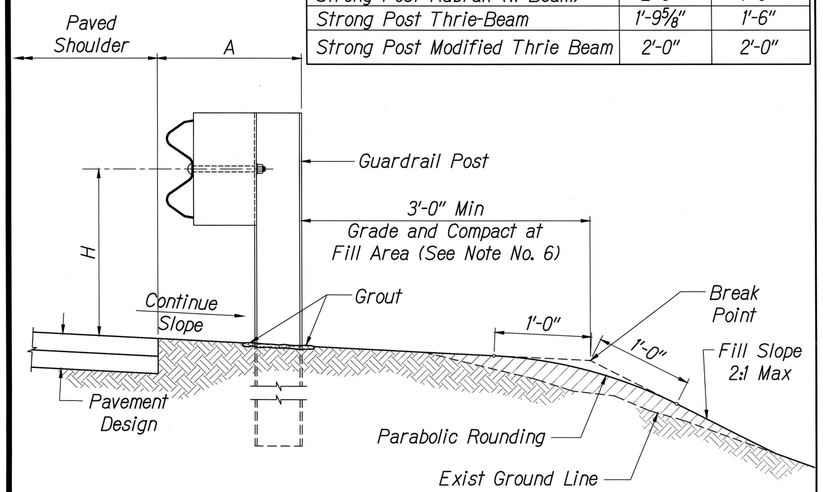

ELEVATION

TYPICAL GUARDRAIL INSTALLATION

Not to Scale

4 S5.16 | S5.16

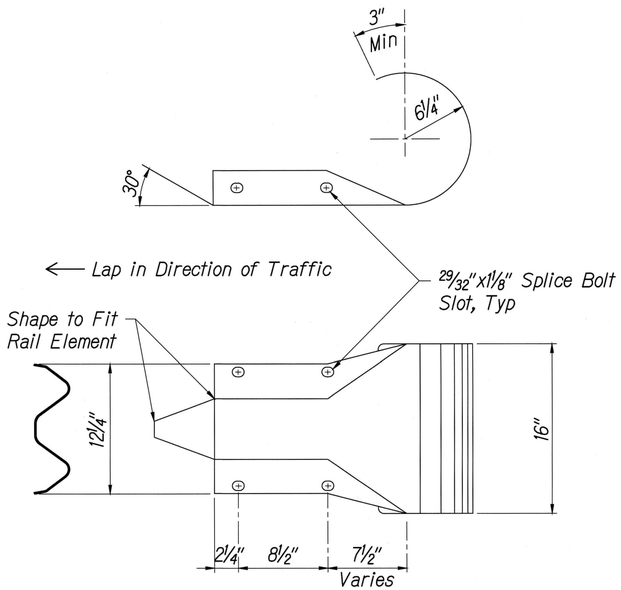

Note:
The Cross-sectional Dimensions for this Part are to Fit Over Part RWM02b.

Designator	Base Metal Thickness
RWE03a	12 Gauge

W-BEAM END SECTION (ROUNDED RWE03a)

Not to Scale

5 S5.16 | S5.16

KEN KAZUO HAYASHIDA
LICENSED PROFESSIONAL ENGINEER
No. 6818-S
HAWAII, U.S.A.

EXPIRATION DATE OF THE LICENSE 4/30/2018
THIS WORK WAS PREPARED BY ME OR UNDER MY SUPERVISION

STATE OF HAWAII
DEPARTMENT OF TRANSPORTATION
HIGHWAYS DIVISION

GUARDRAIL DETAILS

INTERSTATE ROUTE H-1, H-2 AND H201
DESTINATION SIGN UPGRADE / REPLACEMENT, PHASE 2
Federal Aid Project NO. - NH-IM-0300(142)

Scale: As Shown Date: May 2016

SHEET No. S5.16 OF 191 SHEETS

P:\Drafting\2016-07-21_2239 Dot H1 H2 Signs Phase 2\29_2239_S5-14_S5-15_S5-16.dwg, 10/6/2016 7:33:52 AM, tamanaha

FED. ROAD DIST. NO.	STATE	FED. AID PROJ. NO.	FISCAL YEAR	SHEET NO.	TOTAL SHEETS
HAWAII	HAW.	NH-IM-0300(142)	2016	63	191

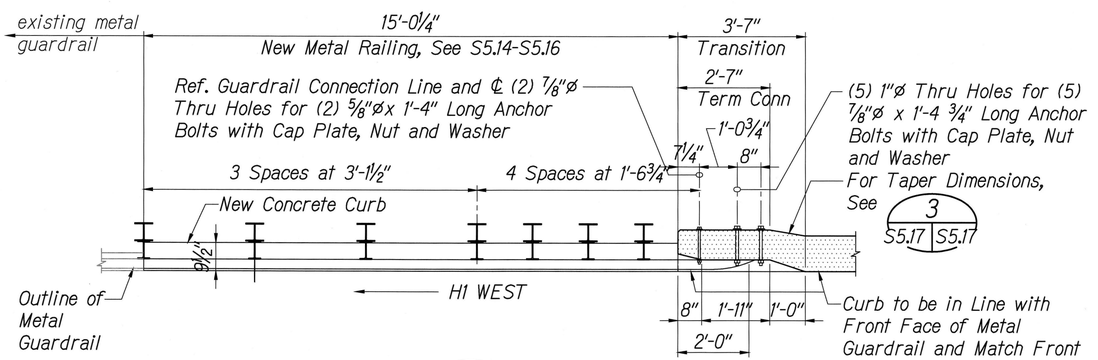

PLAN 1 S5.13 S5.17

Scale: 1/2" = 1'-0"

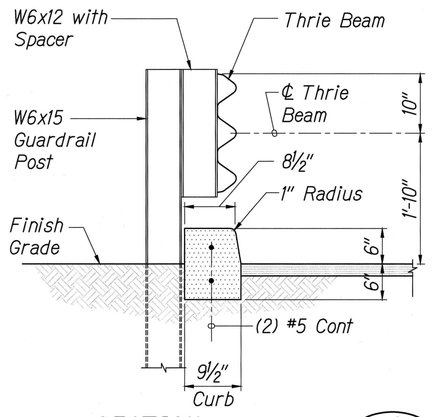

SECTION 4 S5.13 S5.17

Scale: 1" = 1'-0"

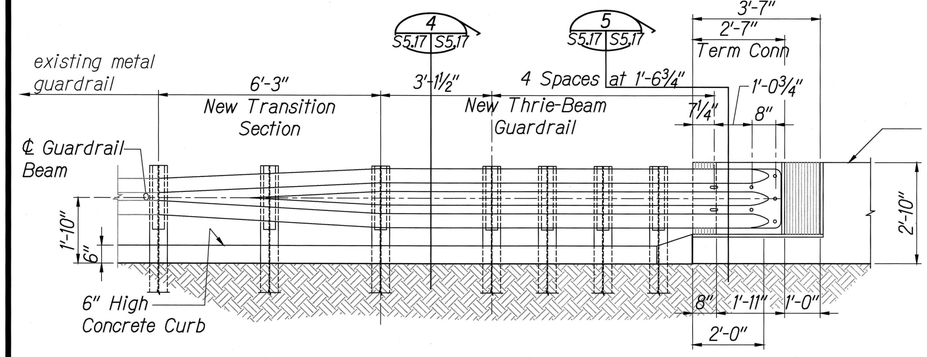

ELEVATION 2 S5.13 S5.17

Scale: 1/2" = 1'-0"

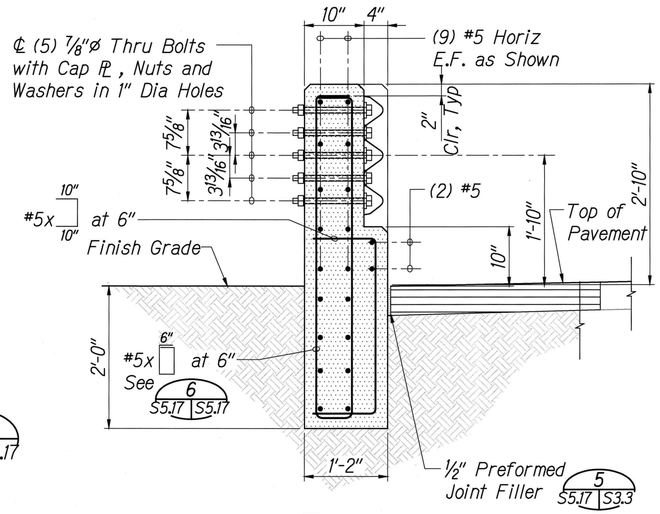

SECTION 5 S5.13 S5.17

Scale: 1" = 1'-0"

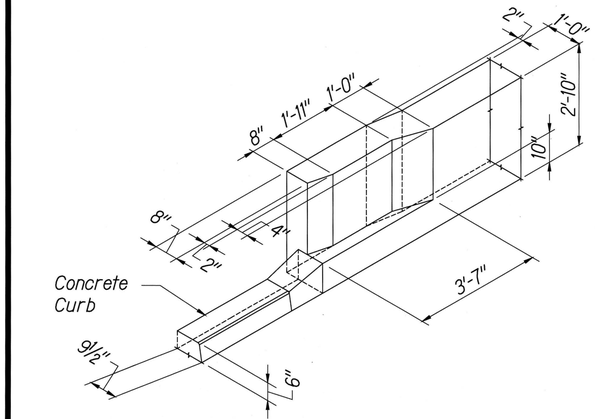

ELEVATION - CONCRETE BARRIER TRANSITION 3 S5.17 S5.17

Scale: 1/2" = 1'-0"

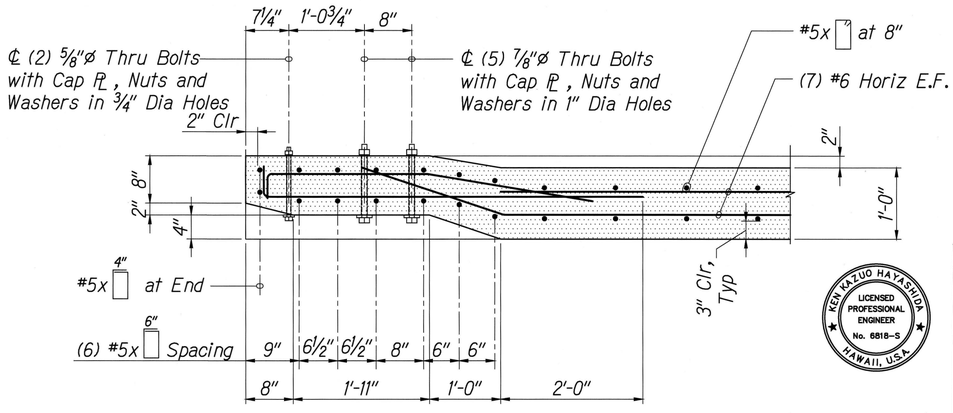

PARTIAL PLAN SECTION SHOWING REINF. 6 S5.17 S5.17

Scale: 1" = 1'-0"

KEN KAZUO HAYASHIDA LICENSED PROFESSIONAL ENGINEER No. 6818-S HAWAII, U.S.A.

EXPIRATION DATE OF THE LICENSE 4/30/2018

THIS WORK WAS PREPARED BY ME OR UNDER MY SUPERVISION

STATE OF HAWAII
DEPARTMENT OF TRANSPORTATION
HIGHWAYS DIVISION

MISCELLANEOUS BARRIER AND RAILING DETAILS

INTERSTATE ROUTE H-1, H-2 AND H201
DESTINATION SIGN UPGRADE / REPLACEMENT, PHASE 2
Federal Aid Project NO. - NH-IM-0300(142)

Scale: As Shown Date: May 2016

SHEET No. S5.17 OF 191 SHEETS

FED. ROAD DIST. NO.	STATE	FED. AID PROJ. NO.	FISCAL YEAR	SHEET NO.	TOTAL SHEETS
HAWAII	HAW.	NH-IM-0300(142)	2016	64	191

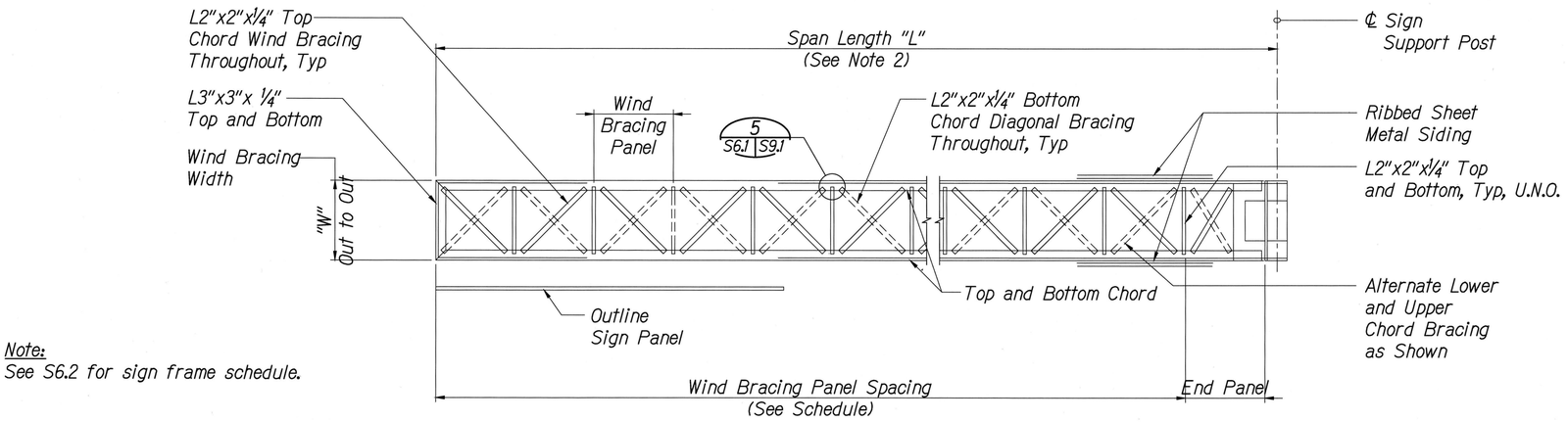

Note:
See S6.2 for sign frame schedule.

TYPE "A" TYPICAL PLAN - TOP AND BOTTOM WIND BRACE FRAMING — 1 S6.1 | S6.1

Not to Scale

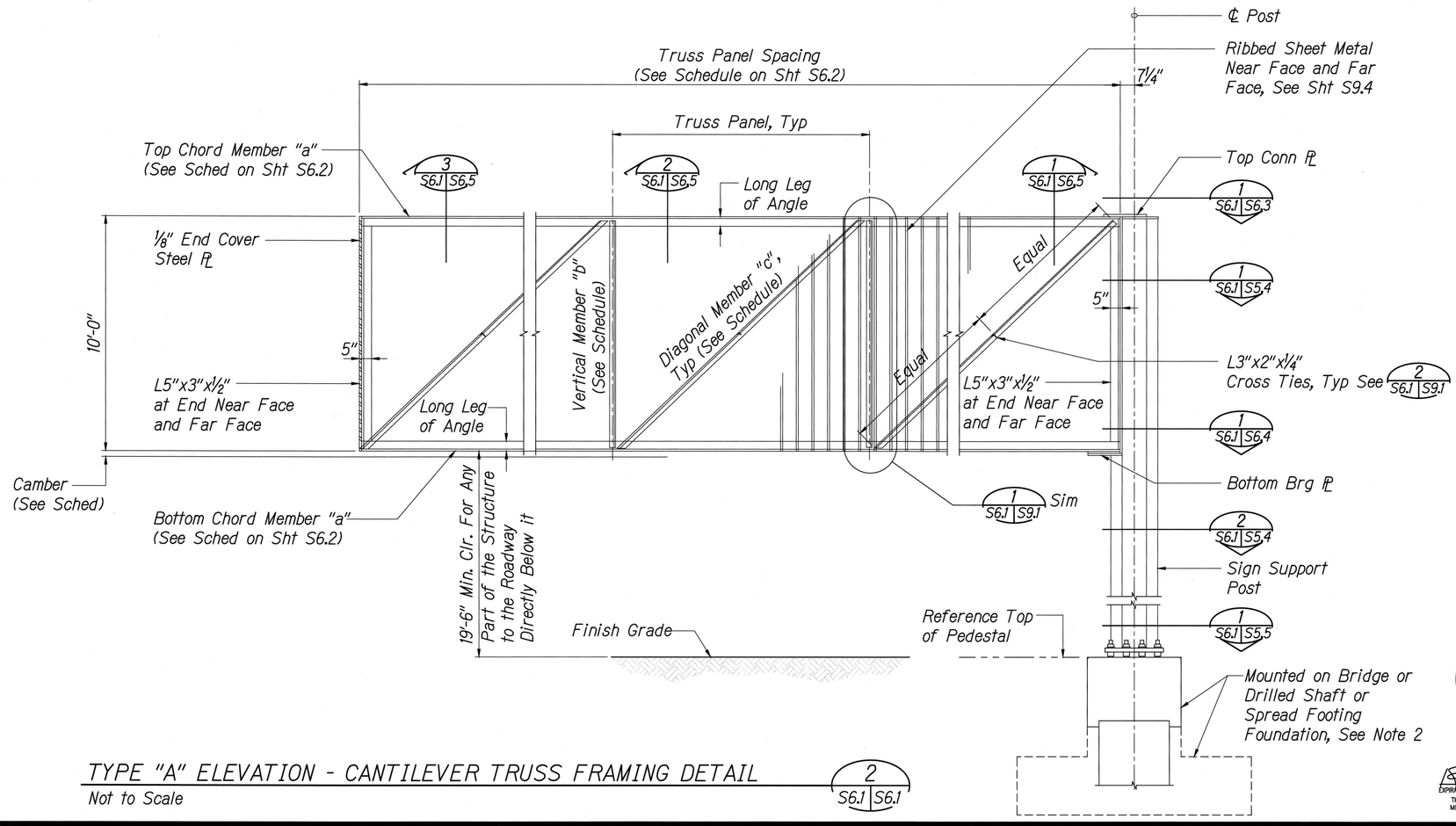

TYPE "A" ELEVATION - CANTILEVER TRUSS FRAMING DETAIL — 2 S6.1 | S6.1

Not to Scale

Notes:
1. Truss panels at each end are measured from back of angle at end vertical members to ℄ angles at intermediate vertical members.
2. For Type A sign general arrangement, see S4.1, S4.2, S4.3, S4.5, S4.6, S4.7, and S4.11

KEN KAZUO HAYASHIDA
LICENSED PROFESSIONAL ENGINEER
No. 6818-S
HAWAII, U.S.A.

EXPIRATION DATE OF THE LICENSE 4/30/2018
THIS WORK WAS PREPARED BY ME OR UNDER MY SUPERVISION

STATE OF HAWAII
DEPARTMENT OF TRANSPORTATION
HIGHWAYS DIVISION

TYPE "A" DESTINATION SIGN FRAMING PLAN AND ELEVATION

INTERSTATE ROUTE H-1, H-2 AND H201
DESTINATION SIGN UPGRADE / REPLACEMENT, PHASE 2
Federal Aid Project NO. - NH-IM-0300(142)

Scale: As Shown Date: May 2016

SHEET No. S6.1 OF 191 SHEETS

P:\Drafting\2016-07-21_2239 Dot H1 H2 Signs Phase 2\30_2239_S6-1_S6-2.dwg, 10/6/2016 7:33:58 AM, tamanaha

FED. ROAD DIST. NO.	STATE	FED. AID PROJ. NO.	FISCAL YEAR	SHEET NO.	TOTAL SHEETS
HAWAII	HAW.	NH-IM-0300(142)	2016	65	191

TYPE "A" DESTINATION SIGN FRAMING SCHEDULE

Sign Destination	Truss Panels		Wind Panels		Framing Sizes				Camber
	No.	Spacing	No.	Spacing	Wind Bracing Width "W"	Member "a" - T&B Chords	Member "b" - Vertical	Member "c" - Diagonal	
H1EB-112, H1EB-113, H1EB-114, H1WB-402	4	Equal spaces	12	Equal spaces	2'-0"	L 5 x 3½ x ¾	L 3 x 3x ¼	L 3 x 3 x ¼	2"
H1WB-418	4	Equal spaces	12	Equal spaces	2'-0"	L 5 x 3½ x ¾	L 3 x 3x ¼	L 3 x 3 x ¼	2½"
78WB-851	4	Equal spaces	12	Equal spaces	2'-0"	L 5 x 3½ x ⅝	L 3 x 3x ¼	L 3 x 3 x ¼	2"
H1WB-424	5	Equal spaces	15	Equal spaces	2'-6"	L 6 x 4 x ¾	L 3½ x 3x ¼	L 3 x 3 x ¼	2¾"

Notes:

1. Camber shown is equivalent to the maximum calculated vertical dead load displacement of the truss.
2. The Contractor shall precamber the truss panels to account for the vertical dead load deflection.
3. Truss panels and wind panels including the end panels shall be equally spaced thruout the entire span length.

TYPE "A" DESTINATION SIGN FRAMING SCHEDULE
Not to Scale

1
S6.2 | S6.2

KENT KAZUO HAYASHIDA
LICENSED PROFESSIONAL ENGINEER
No. 6818-S
HAWAII, U.S.A.

EXPIRATION DATE OF THE LICENSE 4/30/2018
THIS WORK WAS PREPARED BY ME OR UNDER MY SUPERVISION

STATE OF HAWAII
DEPARTMENT OF TRANSPORTATION
HIGHWAYS DIVISION

TYPE "A" DESTINATION SIGN FRAMING SCHEDULE

INTERSTATE ROUTE H-1, H-2 AND H201
DESTINATION SIGN UPGRADE / REPLACEMENT, PHASE 2

Federal Aid Project NO. - NH-IM-0300(142)

Scale: As Shown Date: May 2016

SHEET No. S6.2 OF 191 SHEETS

P:\Drafting\2016-07-21_2239 Dot H1 H2 Signs Phase 2\30_2239_S6-1_S6-2.dwg, 10/6/2016 7:33:58 AM, tamanaha

FED. ROAD DIST. NO.	STATE	FED. AID PROJ. NO.	FISCAL YEAR	SHEET NO.	TOTAL SHEETS
HAWAII	HAW.	NH-IM-0300(142)	2016	66	191

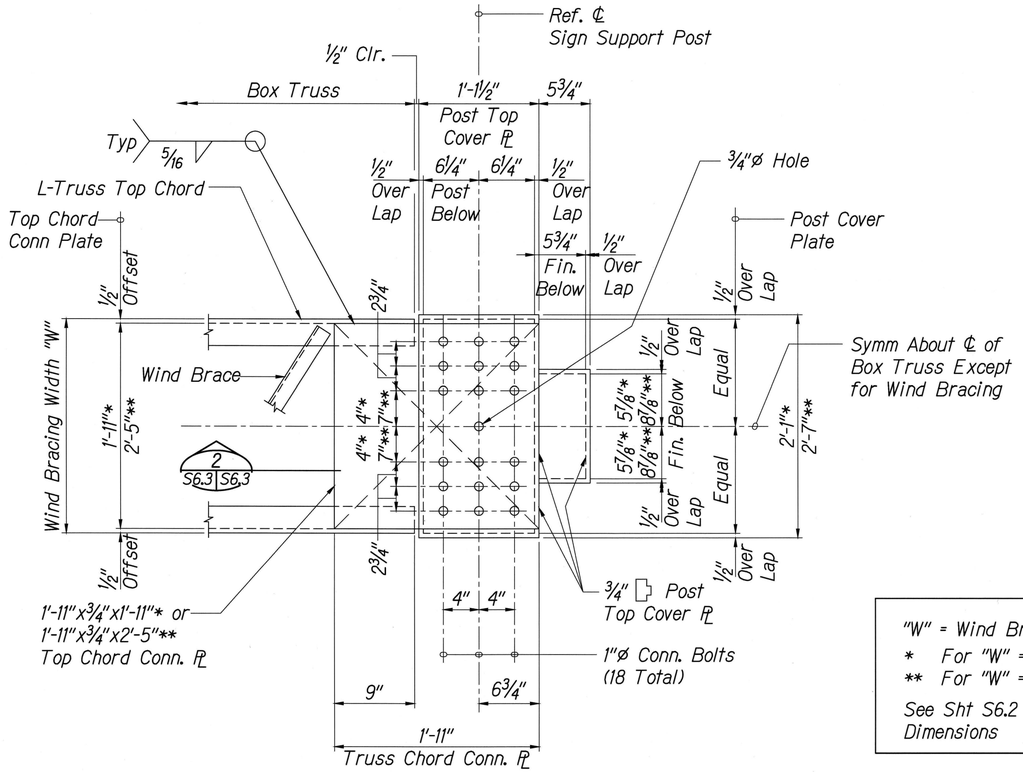

"W" = Wind Bracing Width
* For "W" = 2'-0"
** For "W" = 2'-6"
See Sht S6.2 for "W" Dimensions

PLAN - DETAIL AT TOP OF COLUMN

Not to Scale

1 S6.1, S6.3 | S6.3

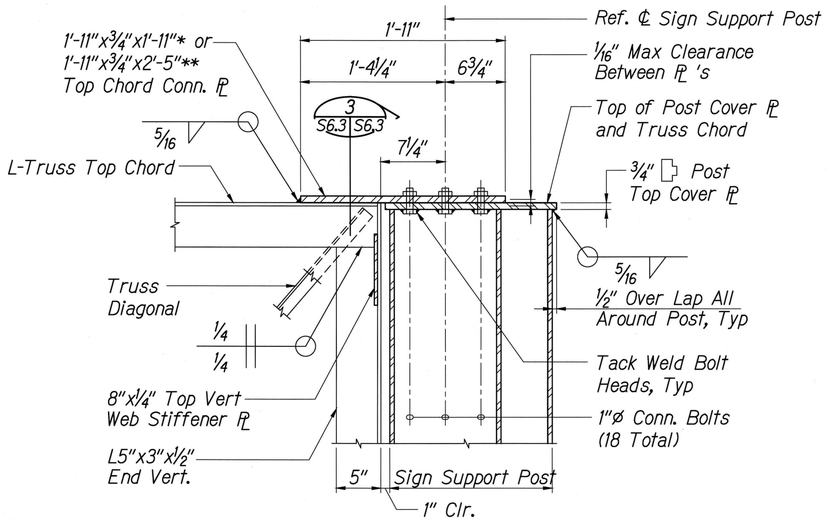

SECTION

Not to Scale

2 S6.3 | S6.3

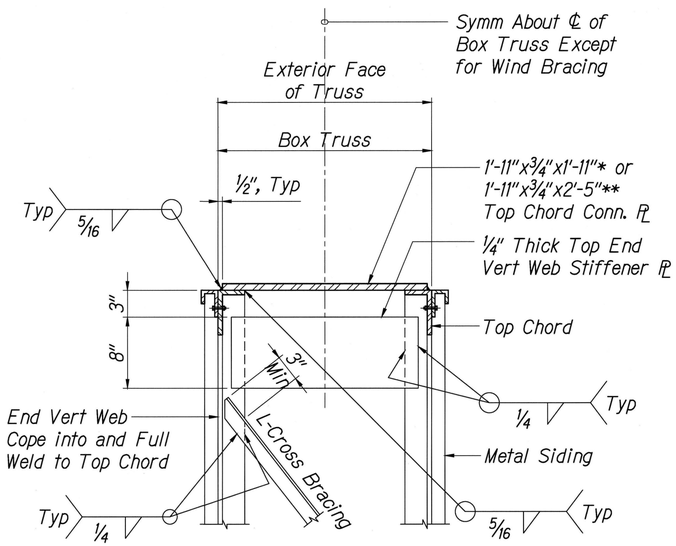

SECTION

Not to Scale

3 S6.3 | S6.3

KEN KAZUO HAYASHIDA
LICENSED PROFESSIONAL ENGINEER
No. 6818-S
HAWAII, U.S.A.

EXPIRATION DATE OF THE LICENSE 4/30/2018
THIS WORK WAS PREPARED BY ME OR UNDER MY SUPERVISION

STATE OF HAWAII
DEPARTMENT OF TRANSPORTATION
HIGHWAYS DIVISION

TYPE "A" DESTINATION SIGN FRAME DETAILS AND SECTIONS

INTERSTATE ROUTE H-1, H-2 AND H201
DESTINATION SIGN UPGRADE / REPLACEMENT, PHASE 2
Federal Aid Project NO. - NH-IM-0300(142)
Scale: As Shown Date: May 2016

SHEET No. S6.3 OF 191 SHEETS

P:\Drafting\2016-07-21_2239 Dot H1 H2 Signs Phase 2\31_2239_S6-3.dwg, 10/6/2016 7:34:01 AM, tamanaha

FED. ROAD DIST. NO.	STATE	FED. AID PROJ. NO.	FISCAL YEAR	SHEET NO.	TOTAL SHEETS
HAWAII	HAW.	NH-IM-0300(142)	2016	67	191

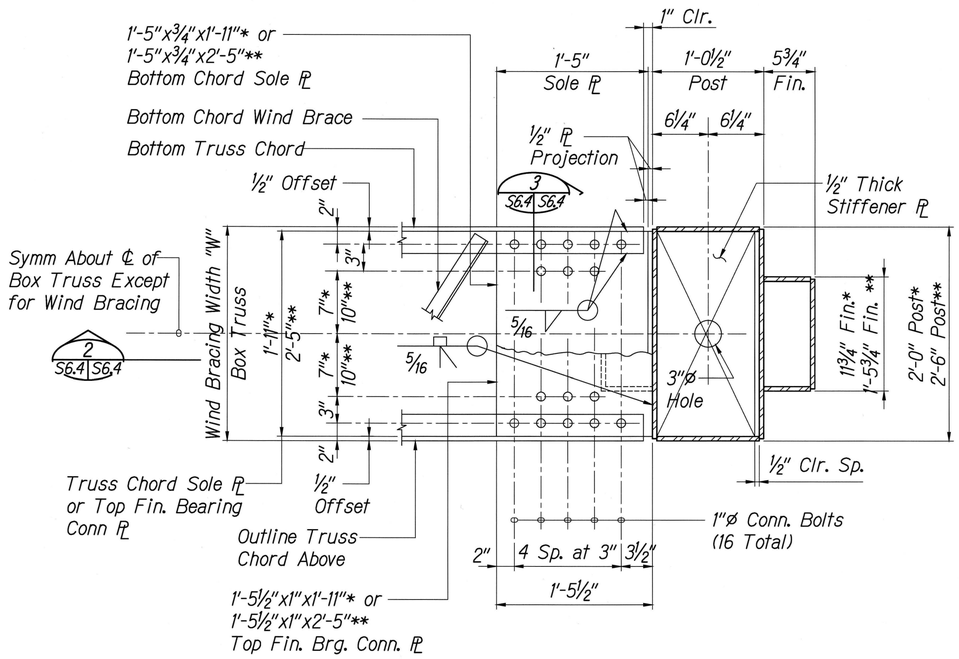

PLAN - DETAIL AT TRUSS BEARING SUPPORT

Not to Scale

1 | S6.1 | S6.4

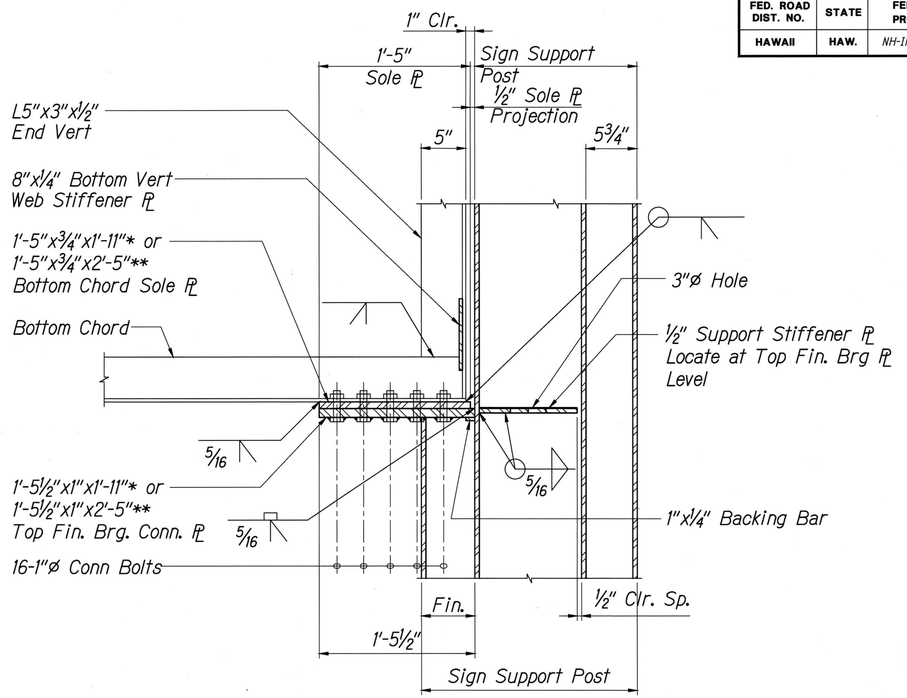

SECTION

Not to Scale

2 | S6.4 | S6.4

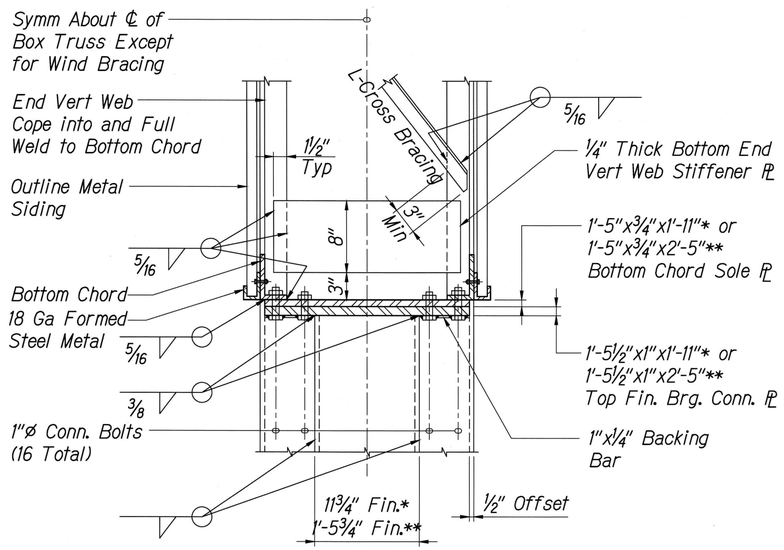

SECTION

Not to Scale

3 | S6.4 | S6.4

* For "W" = 2'-0"
** For "W" = 2'-6"

KEN KAZUO HAYASHIDA
LICENSED PROFESSIONAL ENGINEER
No. 6818-S
HAWAII, U.S.A.

EXPIRATION DATE OF THE LICENSE 4/30/2018
THIS WORK WAS PREPARED BY ME OR UNDER MY SUPERVISION

STATE OF HAWAII
DEPARTMENT OF TRANSPORTATION
HIGHWAYS DIVISION

TYPE "A" DESTINATION SIGN FRAME DETAILS AND SECTIONS

INTERSTATE ROUTE H-1, H-2 AND H201
DESTINATION SIGN UPGRADE / REPLACEMENT, PHASE 2
Federal Aid Project NO. - NH-IM-0300(142)

Scale: As Shown Date: May 2016

SHEET No. S6.4 OF 191 SHEETS

P:\Drafting\2016-07-21_2239 Dot H1 H2 Signs Phase 2\32_2239_S6-4.dwg, 10/6/2016 7:34:03 AM, tamanaha

FED. ROAD DIST. NO.	STATE	FED. AID PROJ. NO.	FISCAL YEAR	SHEET NO.	TOTAL SHEETS
HAWAII	HAW.	NH-IM-0300(142)	2016	68	191

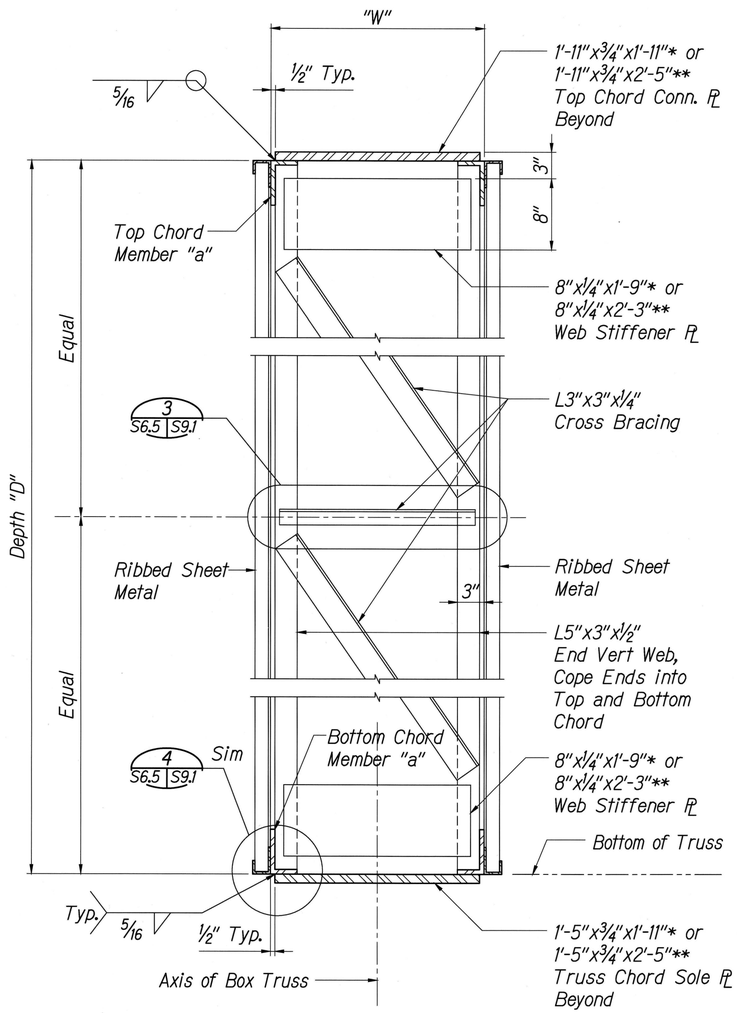

SECTION AT COLUMN END — 1 / S6.1 | S6.5

Not to Scale

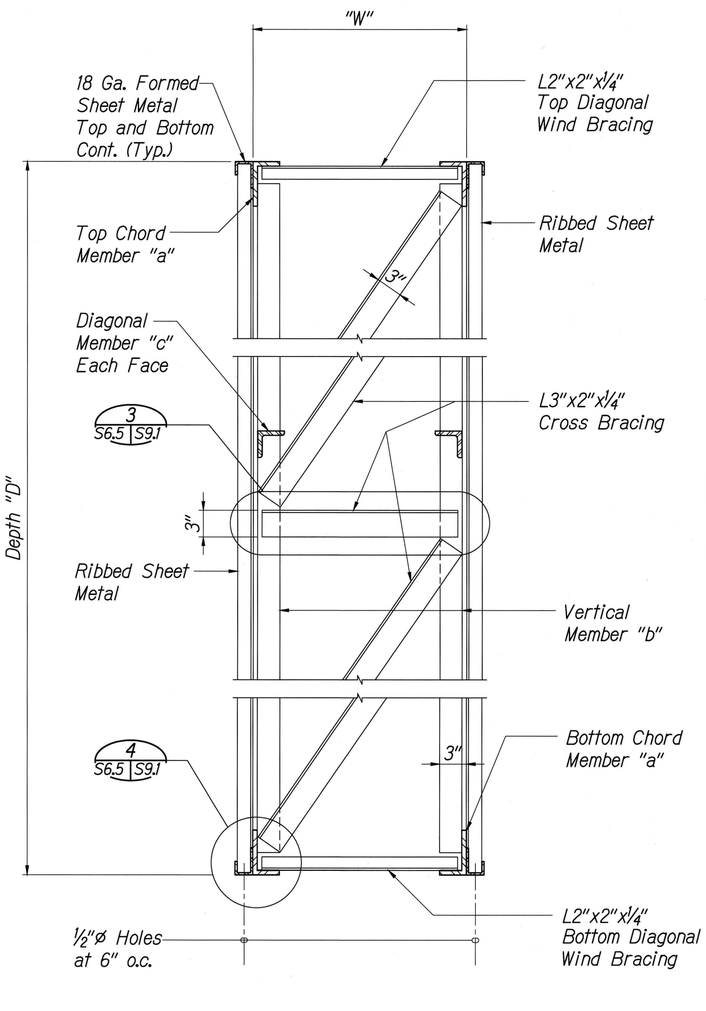

TYPICAL SECTION — 2 / S6.1 | S6.5

Not to Scale

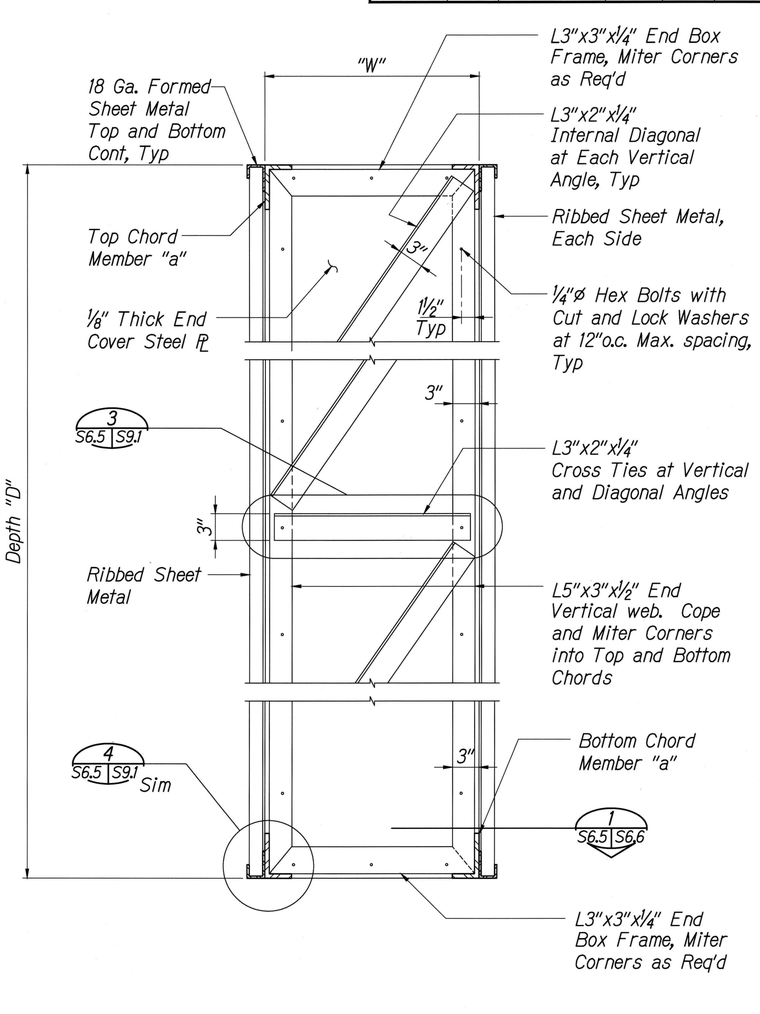

SECTION AT FREE END — 3 / S6.1 | S6.5

Not to Scale

* For "W" = 2'-0"
** For "W" = 2'-6"

KEN KAZUO HAYASHIDA
LICENSED PROFESSIONAL ENGINEER
No. 6818-S
HAWAII, U.S.A.

EXPIRATION DATE OF THE LICENSE 4/30/2018
THIS WORK WAS PREPARED BY ME OR UNDER MY SUPERVISION

STATE OF HAWAII
DEPARTMENT OF TRANSPORTATION
HIGHWAYS DIVISION

TYPE "A" DESTINATION SIGN FRAME DETAILS AND SECTIONS

INTERSTATE ROUTE H-1, H-2 AND H201
DESTINATION SIGN UPGRADE / REPLACEMENT, PHASE 2
Federal Aid Project NO. - NH-IM-0300(142)

Scale: As Shown Date: May 2016

SHEET No. S6.5 OF 191 SHEETS

P:\Drafting\2016-07-21_2239 Dot H1 H2 Signs Phase 2\33_2239_S6-5.dwg, 10/6/2016 7:34:05 AM, tamanaha

FED. ROAD DIST. NO.	STATE	FED. AID PROJ. NO.	FISCAL YEAR	SHEET NO.	TOTAL SHEETS
HAWAII	HAW.	NH-IM-0300(142)	2016	69	191

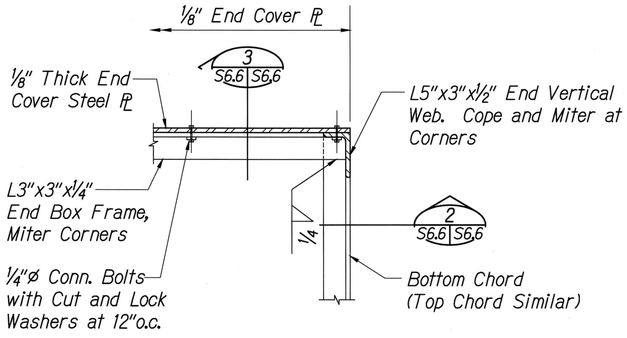

PLAN AT FREE END — 1 S6.5 S6.6
Not to Scale

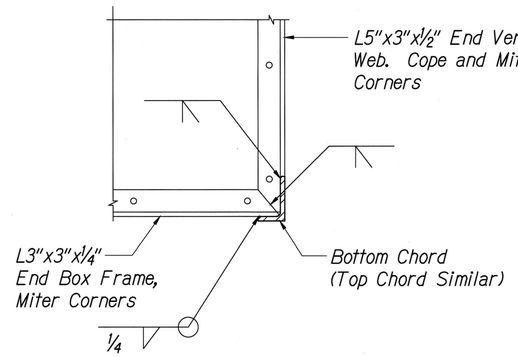

SECTION — 2 S6.6 S6.6
Not to Scale

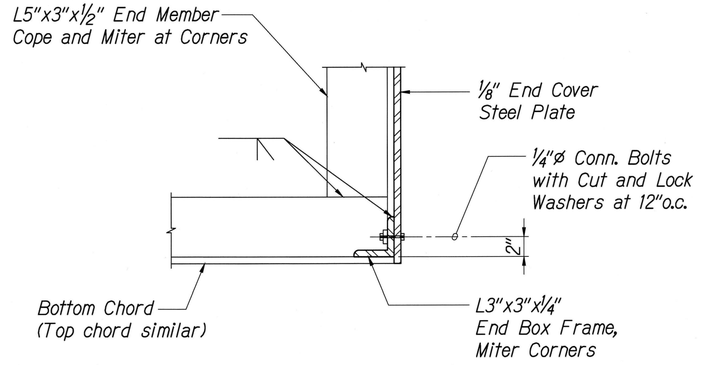

SECTION — 3 S6.6 S6.6
Not to Scale

KEN KAZUO HAYASHIDA
LICENSED PROFESSIONAL ENGINEER
No. 6818-S
HAWAII, U.S.A.

EXPIRATION DATE OF THE LICENSE 4/30/2018
THIS WORK WAS PREPARED BY ME OR UNDER MY SUPERVISION

STATE OF HAWAII
DEPARTMENT OF TRANSPORTATION
HIGHWAYS DIVISION

TYPE "A" DESTINATION SIGN FRAME DETAILS AND SECTIONS

INTERSTATE ROUTE H-1, H-2 AND H201
DESTINATION SIGN UPGRADE / REPLACEMENT, PHASE 2
Federal Aid Project NO. - NH-IM-0300(142)

Scale: As Shown Date: May 2016

SHEET No. S6.6 OF 191 SHEETS

P:\Drafting\2016-07-21_2239 Dot H1 H2 Signs Phase 2\34_2239_S6-6.dwg, 10/6/2016 7:34:08 AM, tamanaha

FED. ROAD DIST. NO.	STATE	FED. AID PROJ. NO.	FISCAL YEAR	SHEET NO.	TOTAL SHEETS
HAWAII	HAW.	NH-IM-0300(142)	2016	70	191

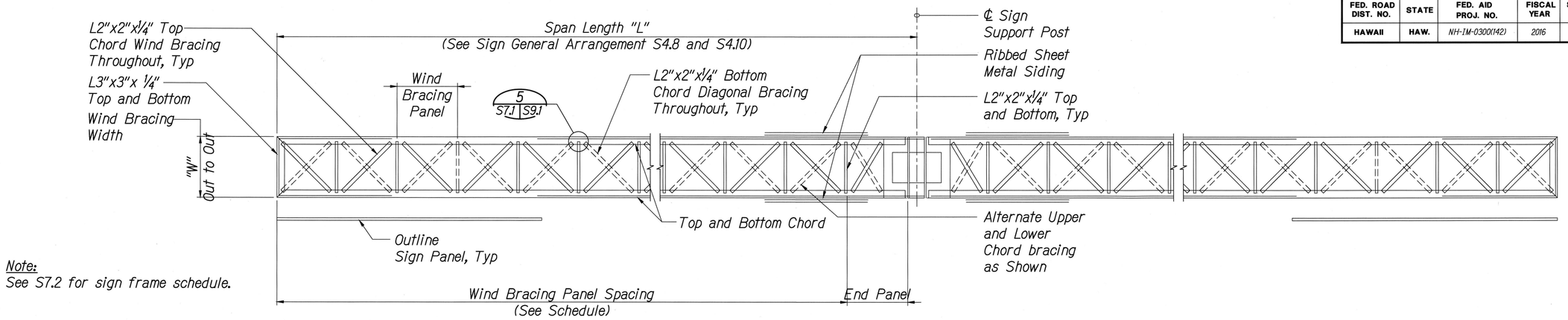

Note:
See S7.2 for sign frame schedule.

TYPE "B" TYPICAL PLAN - TOP AND BOTTOM WIND BRACE FRAMING

1 S7.1 | S7.1

Not to Scale

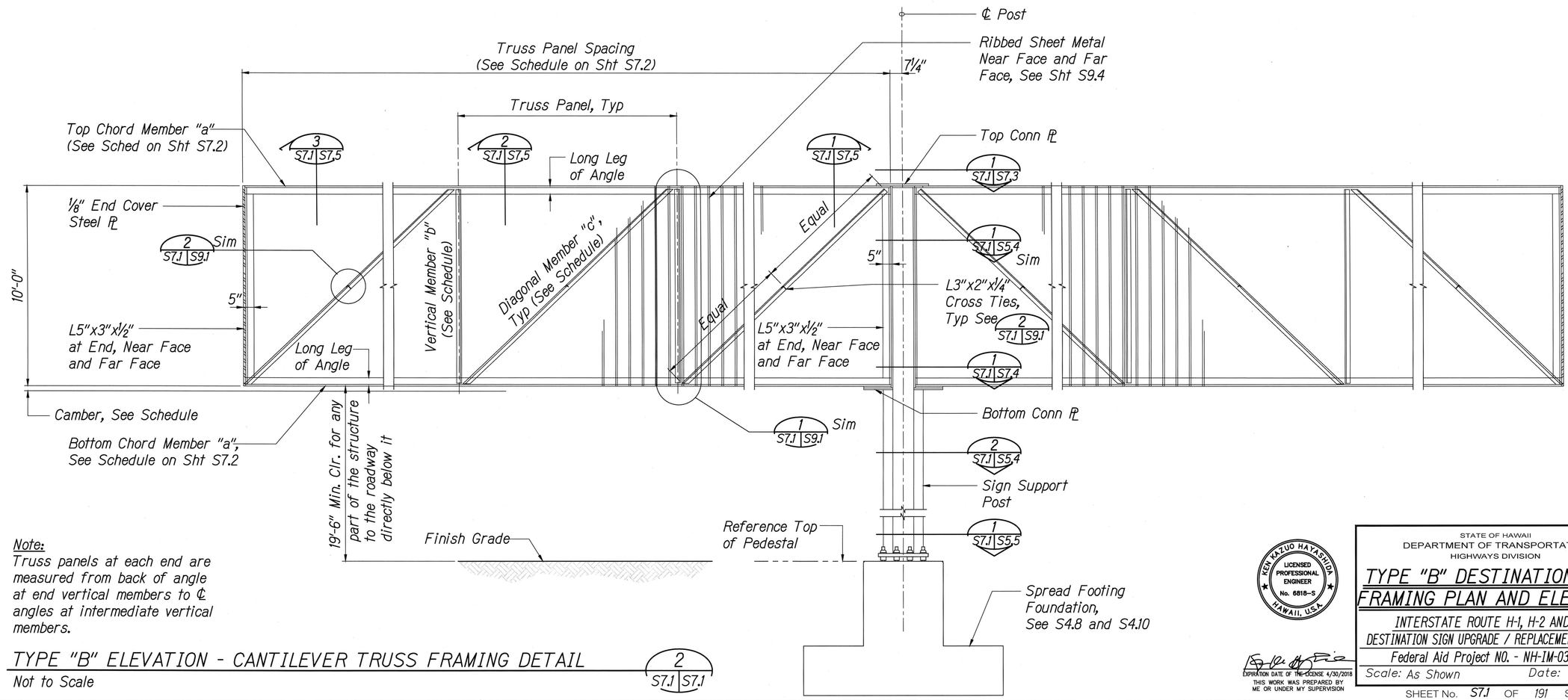

Note:
Truss panels at each end are measured from back of angle at end vertical members to ℄ angles at intermediate vertical members.

TYPE "B" ELEVATION - CANTILEVER TRUSS FRAMING DETAIL

2 S7.1 | S7.1

Not to Scale

KEN KAZUO HAYASHIDA
LICENSED PROFESSIONAL ENGINEER
No. 6818-S
HAWAII, U.S.A.

EXPIRATION DATE OF THE LICENSE 4/30/2018
THIS WORK WAS PREPARED BY ME OR UNDER MY SUPERVISION

STATE OF HAWAII
DEPARTMENT OF TRANSPORTATION
HIGHWAYS DIVISION

TYPE "B" DESTINATION SIGN FRAMING PLAN AND ELEVATION

INTERSTATE ROUTE H-1, H-2 AND H201
DESTINATION SIGN UPGRADE / REPLACEMENT, PHASE 2
Federal Aid Project NO. - NH-IM-0300(142)
Scale: As Shown Date: May 2016

SHEET No. S7.1 OF 191 SHEETS

P:\Drafting\2016-07-21_2239 Dot H1 H2 Signs Phase 2\35_2239_S7-1_S7-2.dwg, 10/6/2016 7:34:10 AM, tamanaha

FED. ROAD DIST. NO.	STATE	FED. AID PROJ. NO.	FISCAL YEAR	SHEET NO.	TOTAL SHEETS
HAWAII	HAW.	NH-1M-0300(142)	2016	71	191

TYPE "B" DESTINATION SIGN FRAMING SCHEDULE

Sign Destination	Truss Panels		Wind Panels		Framing Sizes				Camber
	No.	Spacing	No.	Spacing	Wind Bracing Width "W"	Member "a" - T&B Chords	Member "b" - Vertical	Member "c" - Diagonal	
H1WBR-451 (Left or Right Side)	4	Equal spaces	12	Equal spaces	2'-6"	L 5 x 3½ x ⅝	L 3 x 3 x ¼	L 3 x 3x ¼	2"
78EBR-822 (Left or Right Side)	5	Equal spaces	15	Equal spaces	2'-6"	L 6 x 4 x ¾	L 3½ x 3x ¼	L 3 x 3x ¼	2¾"

Notes:

1. Camber shown is equivalent to the maximum calculated vertical dead load displacement of the truss.
2. The Contractor shall precamber the truss panels to account for the vertical dead load deflection.
3. Truss panels and wind panels including the end panels shall be equally spaced thruout the entire span length.

TYPE "B" DESTINATION SIGN FRAMING SCHEDULE
Not to Scale

1
S7.2 | S7.2

KEN KAZUO HAYASHIDA
LICENSED PROFESSIONAL ENGINEER
No. 6818-S
HAWAII, U.S.A.

EXPIRATION DATE OF THE LICENSE 4/30/2018
THIS WORK WAS PREPARED BY ME OR UNDER MY SUPERVISION

STATE OF HAWAII
DEPARTMENT OF TRANSPORTATION
HIGHWAYS DIVISION

TYPE "B" DESTINATION SIGN FRAMING SCHEDULE

INTERSTATE ROUTE H-1, H-2 AND H201
DESTINATION SIGN UPGRADE / REPLACEMENT, PHASE 2
Federal Aid Project NO. - NH-IM-0300(142)

Scale: As Shown Date: May 2016

SHEET No. S7.2 OF 191 SHEETS

P:\Drafting\2016-07-21_2239 Dot H1 HZ Signs Phase 2\35_2239_S7-1_S7-2.dwg, 10/6/2016 7:34:11 AM, tamanaha

FED. ROAD DIST. NO.	STATE	FED. AID PROJ. NO.	FISCAL YEAR	SHEET NO.	TOTAL SHEETS
HAWAII	HAW.	NH-IM-0300(142)	2016	72	191

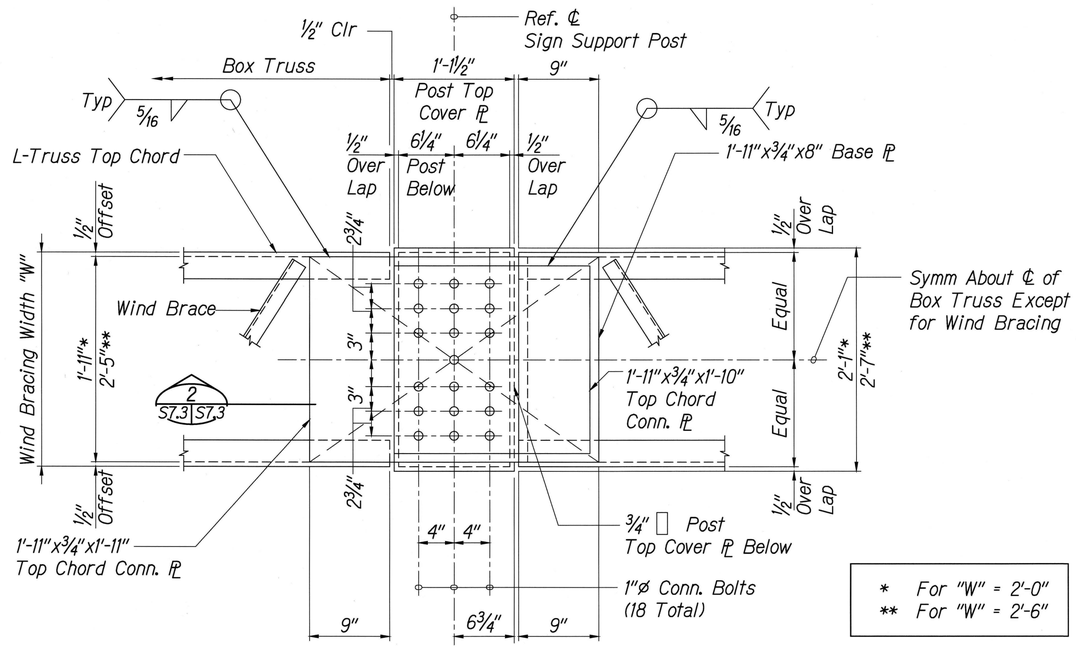

PLAN - DETAIL AT TOP OF COLUMN

Not to Scale

1
S7.1 S7.3

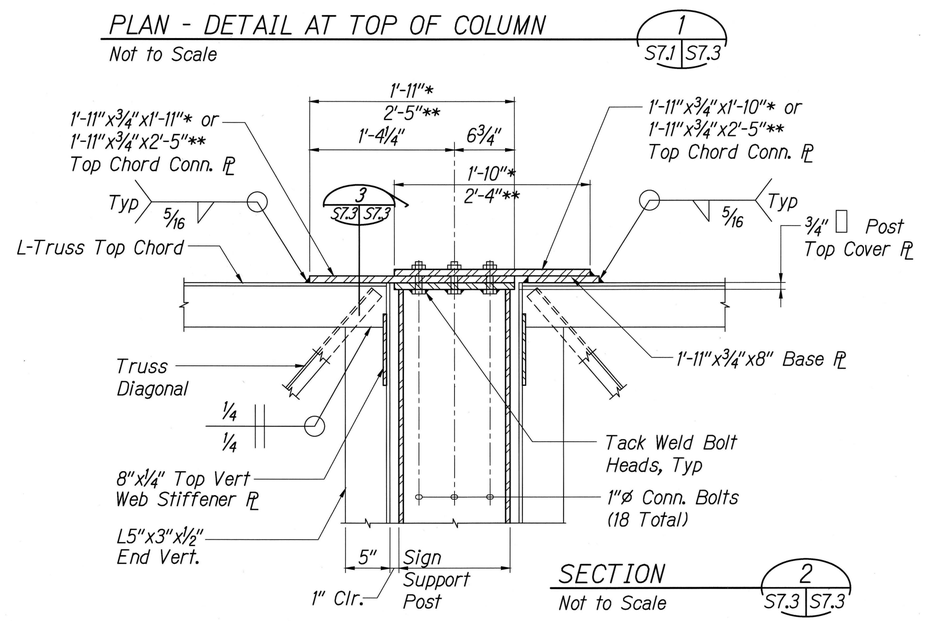

SECTION

Not to Scale

2
S7.3 S7.3

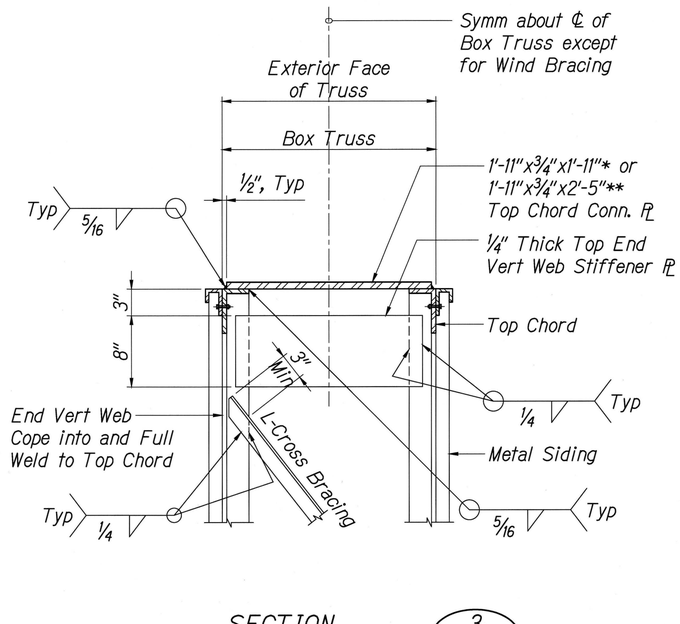

SECTION

Not to Scale

3
S7.3 S7.3

KEN KAZUO HAYASHIDA
LICENSED PROFESSIONAL ENGINEER
No. 6818-S
HAWAII, U.S.A.

EXPIRATION DATE OF THE LICENSE 4/30/2018
THIS WORK WAS PREPARED BY ME OR UNDER MY SUPERVISION

STATE OF HAWAII
DEPARTMENT OF TRANSPORTATION
HIGHWAYS DIVISION

TYPE "B" DESTINATION SIGN FRAME DETAILS AND SECTIONS

INTERSTATE ROUTE H-1, H-2 AND H201
DESTINATION SIGN UPGRADE / REPLACEMENT, PHASE 2
Federal Aid Project NO. - NH-IM-0300(142)
Scale: As Shown Date: May 2016

SHEET No. S7.3 OF 191 SHEETS

P:\Drafting\2016-07-21_2239 Dot H1 H2 Signs Phase 2\36_2239_S7-3.dwg, 10/6/2016 7:34:13 AM, tamanaha

FED. ROAD DIST. NO.	STATE	FED. AID PROJ. NO.	FISCAL YEAR	SHEET NO.	TOTAL SHEETS
HAWAII	HAW.	NH-IM-0300(142)	2016	73	191

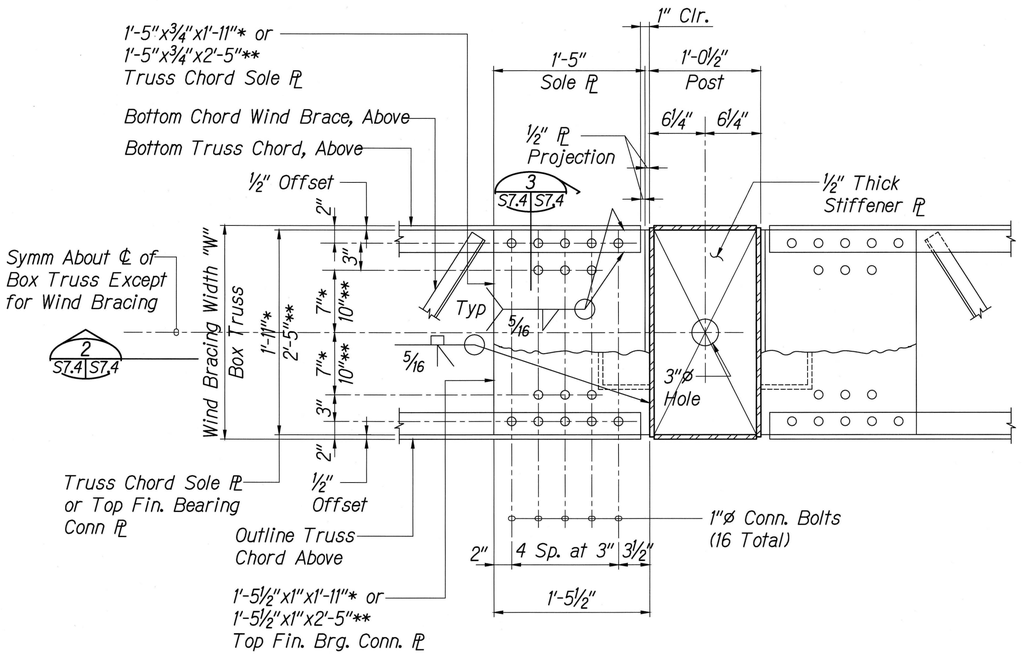

PLAN - DETAIL AT TRUSS BEARING SUPPORT

Not to Scale

1
S7.1 S7.4

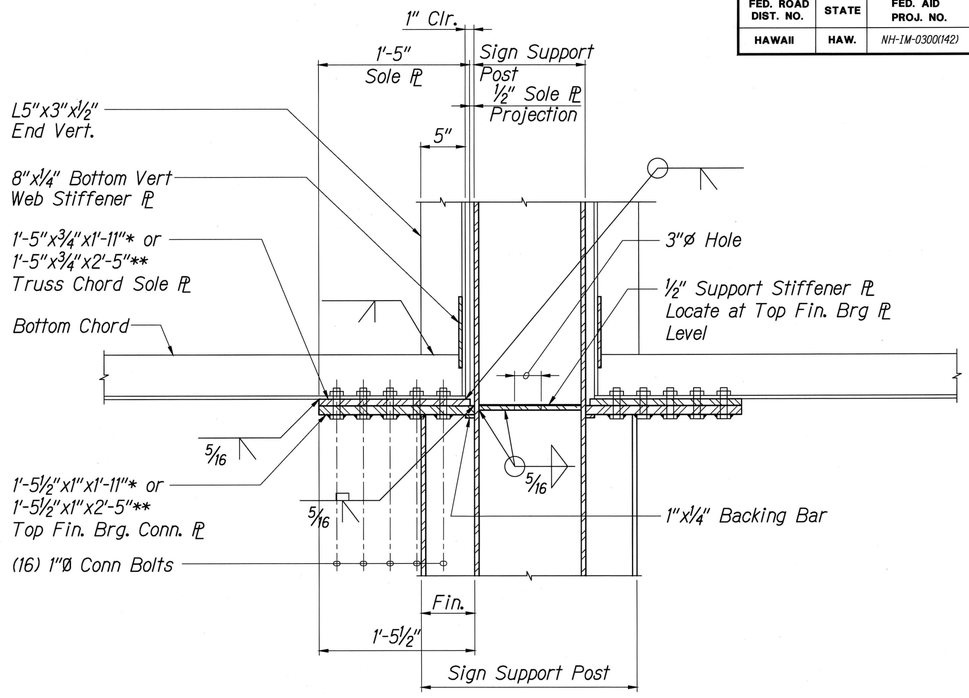

SECTION

Not to Scale

2
S7.4 S7.4

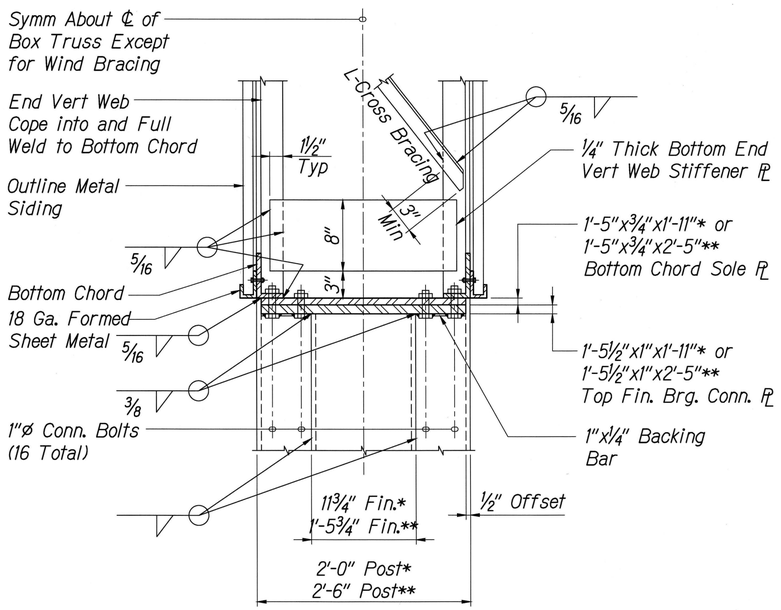

SECTION

Not to Scale

3
S7.4 S7.4

* For "W" = 2'-0"
** For "W" = 2'-6"

KEN KAZUO HAYASHIDA
LICENSED PROFESSIONAL ENGINEER
No. 6818-S
HAWAII, U.S.A.

EXPIRATION DATE OF THE LICENSE 4/30/2018
THIS WORK WAS PREPARED BY ME OR UNDER MY SUPERVISION

STATE OF HAWAII
DEPARTMENT OF TRANSPORTATION
HIGHWAYS DIVISION

TYPE "B" DESTINATION SIGN FRAME DETAILS AND SECTIONS

INTERSTATE ROUTE H-1, H-2 AND H201
DESTINATION SIGN UPGRADE / REPLACEMENT, PHASE 2
Federal Aid Project NO. - NH-IM-0300(142)

Scale: As Shown Date: May 2016

SHEET No. S7.4 OF 191 SHEETS

P:\Drafting\2016-07-21_2239 Dot H1 H2 Signs Phase 2\37_2239_S7-4.dwg, 10/6/2016 7:34:16 AM, tamanaha

FED. ROAD DIST. NO.	STATE	FED. AID PROJ. NO.	FISCAL YEAR	SHEET NO.	TOTAL SHEETS
HAWAII	HAW.	NH-IM-0300(142)	2016	74	191

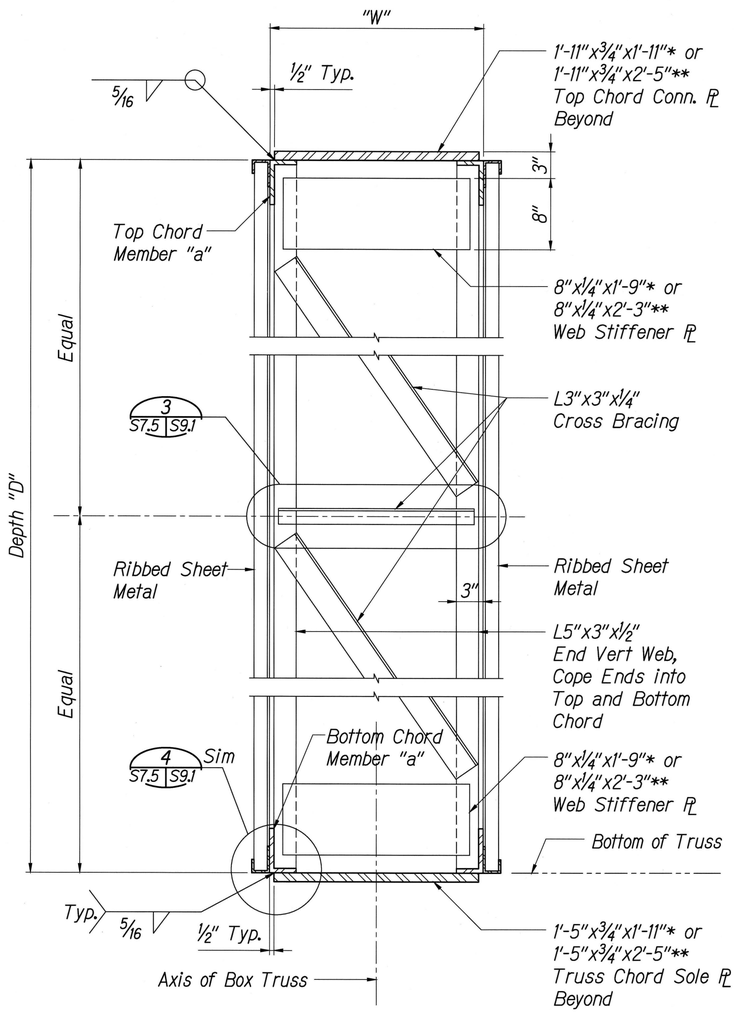

SECTION AT COLUMN END — 1 / S7.1 | S7.5

Not to Scale

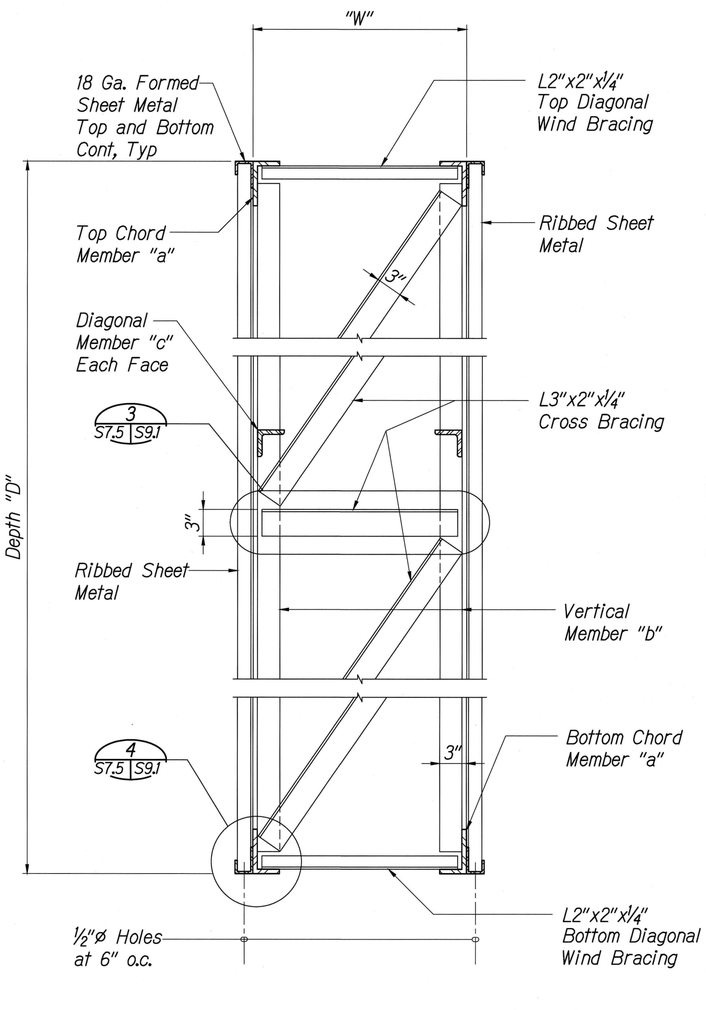

TYPICAL SECTION — 2 / S7.1 | S7.5

Not to Scale

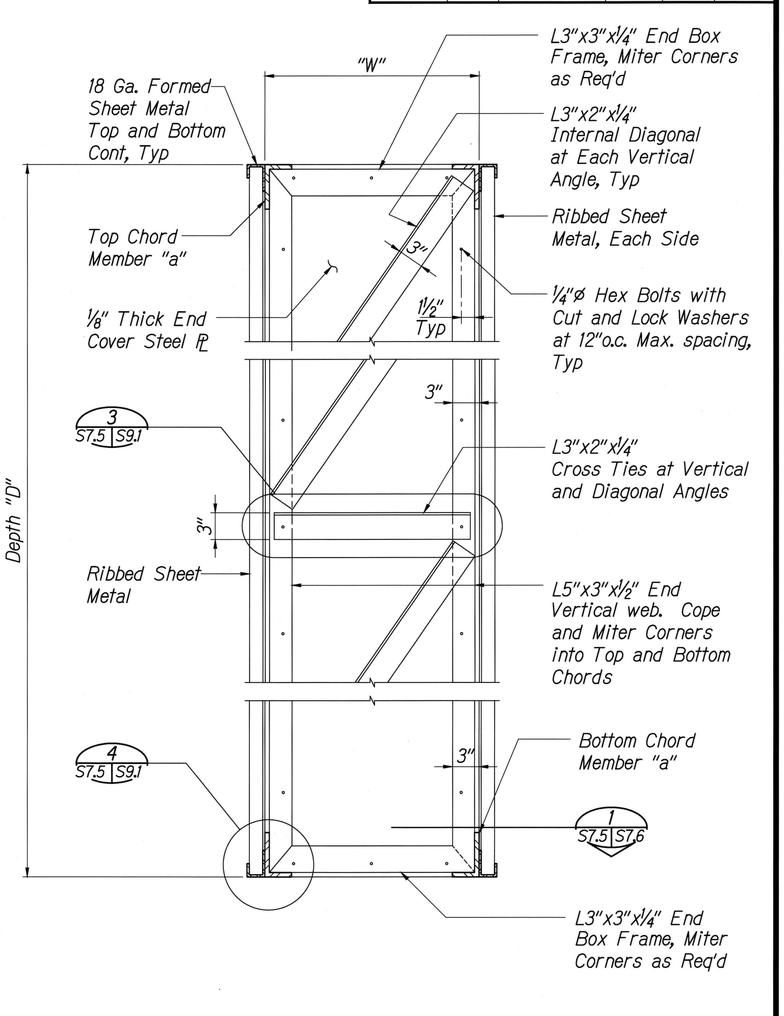

SECTION AT FREE END — 3 / S7.1 | S7.5

Not to Scale

* For "W" = 2'-0"
** For "W" = 2'-6"

KEN KAZUO HAYASHIDA
LICENSED PROFESSIONAL ENGINEER
No. 6818-S
HAWAII, U.S.A.

EXPIRATION DATE OF THE LICENSE 4/30/2018
THIS WORK WAS PREPARED BY ME OR UNDER MY SUPERVISION

STATE OF HAWAII
DEPARTMENT OF TRANSPORTATION
HIGHWAYS DIVISION

TYPE "B" DESTINATION SIGN FRAME DETAILS AND SECTIONS

INTERSTATE ROUTE H-1, H-2 AND H201
DESTINATION SIGN UPGRADE / REPLACEMENT, PHASE 2
Federal Aid Project NO. - NH-IM-0300(142)

Scale: As Shown Date: May 2016

SHEET No. S7.5 OF 191 SHEETS

P:\Drafting\2016-07-21_2239 Dot H1 H2 Signs Phase 2\38_2239_S7-5.dwg, 10/6/2016 7:34:18 AM, tamanaha

FED. ROAD DIST. NO.	STATE	FED. AID PROJ. NO.	FISCAL YEAR	SHEET NO.	TOTAL SHEETS
HAWAII	HAW.	NH-IM-0300(142)	2016	75	191

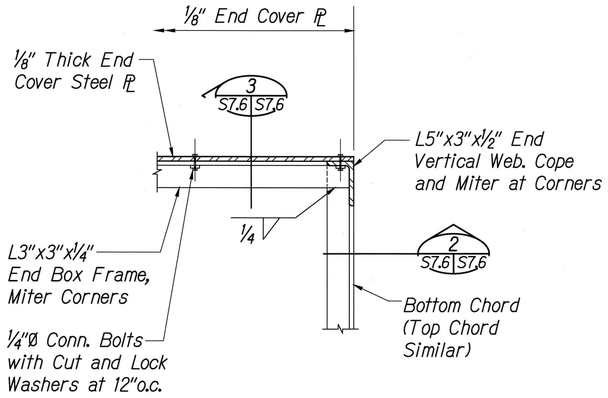

PLAN AT FREE END — 1 S7.5 S7.6
Not to Scale

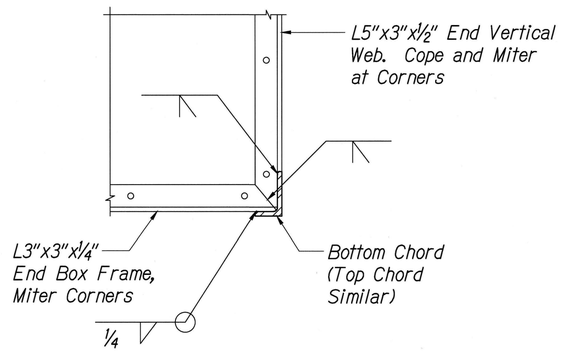

SECTION — 2 S7.6 S7.6
Not to Scale

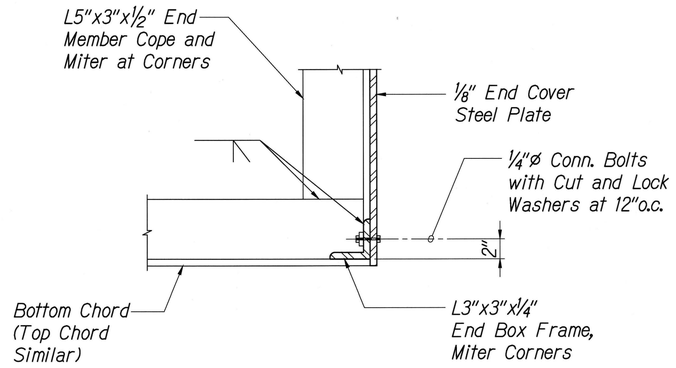

SECTION — 3 S7.6 S7.6
Not to Scale

KEN KAZUO HAYASHIDA
LICENSED PROFESSIONAL ENGINEER
No. 6818-S
HAWAII, U.S.A.

EXPIRATION DATE OF THE LICENSE 4/30/2018
THIS WORK WAS PREPARED BY ME OR UNDER MY SUPERVISION

STATE OF HAWAII
DEPARTMENT OF TRANSPORTATION
HIGHWAYS DIVISION

TYPE "B" DESTINATION SIGN FRAME DETAILS AND SECTIONS

INTERSTATE ROUTE H-1, H-2 AND H201
DESTINATION SIGN UPGRADE / REPLACEMENT, PHASE 2
Federal Aid Project NO. - NH-IM-0300(142)

Scale: As Shown Date: May 2016

SHEET No. S7.6 OF 191 SHEETS

P:\Drafting\2016-07-21_2239 Dot H1 H2 Signs Phase 2\39_2239_S7-6.dwg, 10/6/2016 7:34:20 AM, tamanaha

FED. ROAD DIST. NO.	STATE	FED. AID PROJ. NO.	FISCAL YEAR	SHEET NO.	TOTAL SHEETS
HAWAII	HAW.	NH-IM-0300(142)	2016	76	191

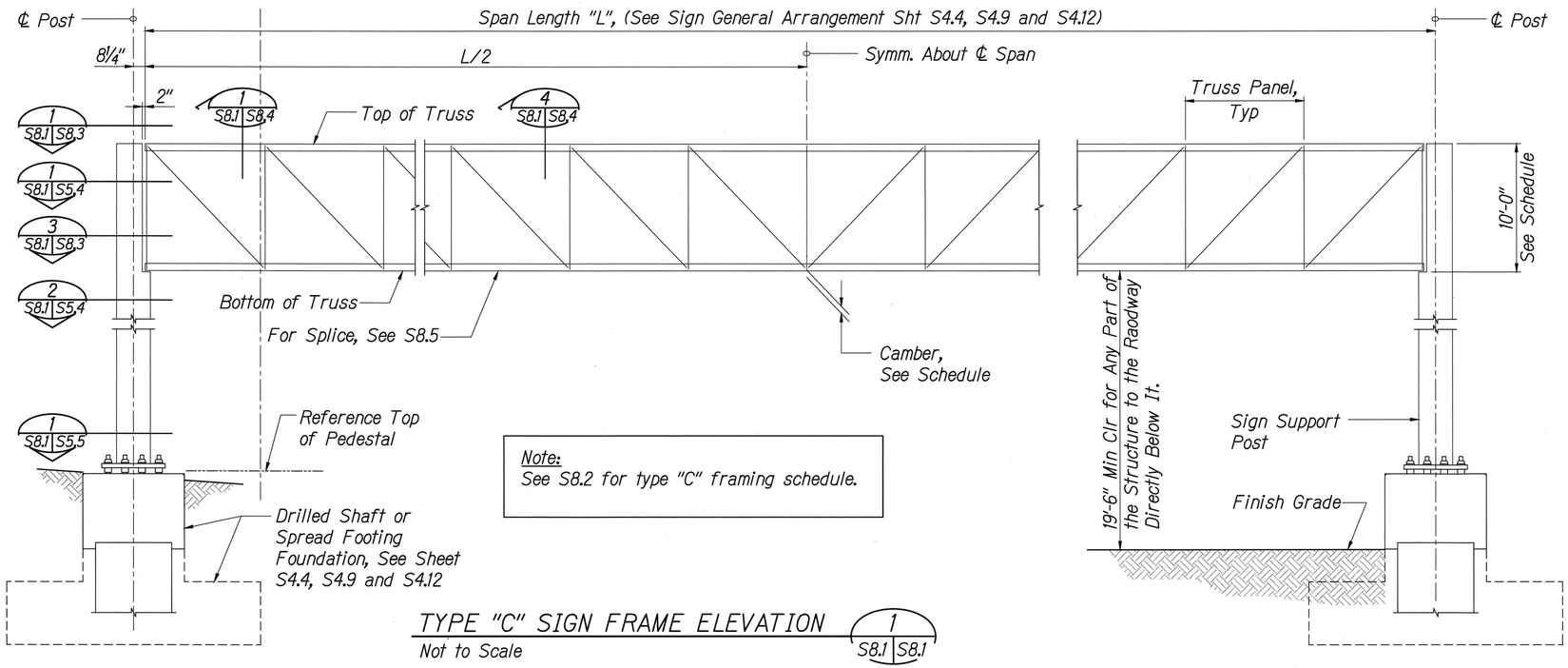

TYPE "C" SIGN FRAME ELEVATION — 1 S8.1 S8.1
Not to Scale

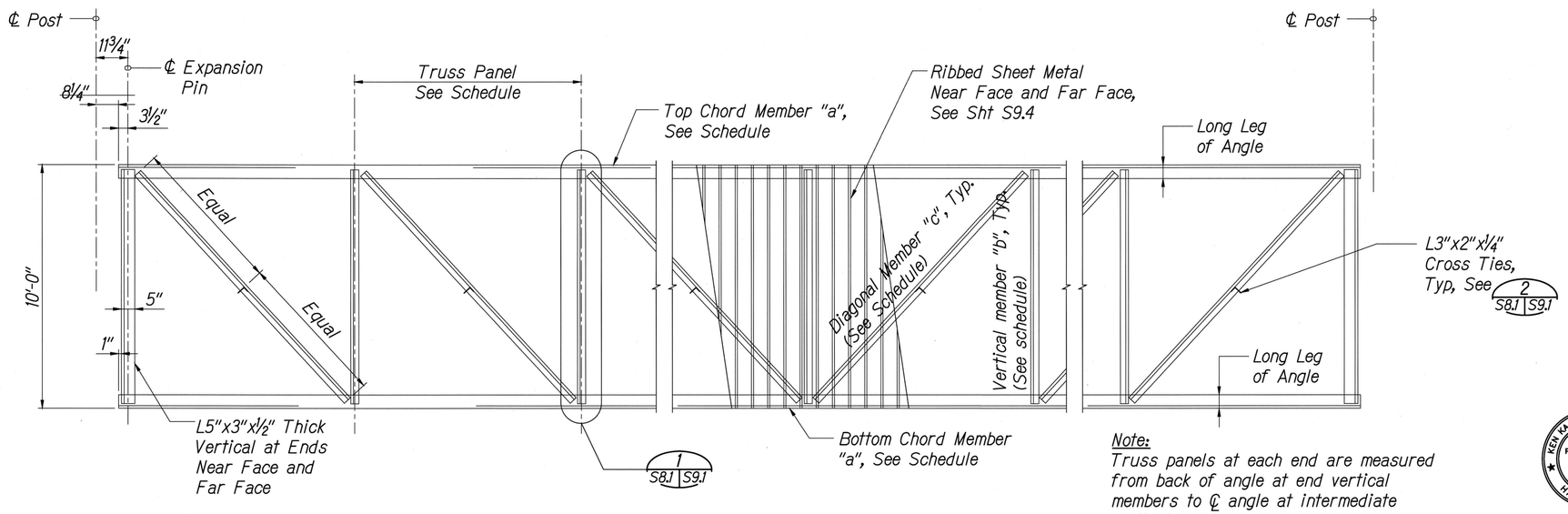

TYPE "C" ELEVATION - TRUSS FRAMING DETAIL — 2 S8.1 S8.1
Not to Scale

KEN KAZUO HAYASHIDA
LICENSED PROFESSIONAL ENGINEER
No. 6818-S
HAWAII, U.S.A.

EXPIRATION DATE OF THE LICENSE 4/30/2018
THIS WORK WAS PREPARED BY ME OR UNDER MY SUPERVISION

STATE OF HAWAII
DEPARTMENT OF TRANSPORTATION
HIGHWAYS DIVISION

TYPE "C" DESTINATION SIGN FRAMING ELEVATIONS

INTERSTATE ROUTE H-1, H-2 AND H201
DESTINATION SIGN UPGRADE / REPLACEMENT, PHASE 2
Federal Aid Project NO. - NH-IM-0300(142)

Scale: As Shown Date: May 2016

SHEET No. S8.1 OF 191 SHEETS

P:\Drafting\2016-07-21_2239 Dot H1 H2 Signs Phase 2\40_2239_S8-1.dwg, 10/6/2016 7:34:23 AM, tamanaha

FED. ROAD DIST. NO.	STATE	FED. AID PROJ. NO.	FISCAL YEAR	SHEET NO.	TOTAL SHEETS
HAWAII	HAW.	NH-IM-0300(142)	2016	77	191

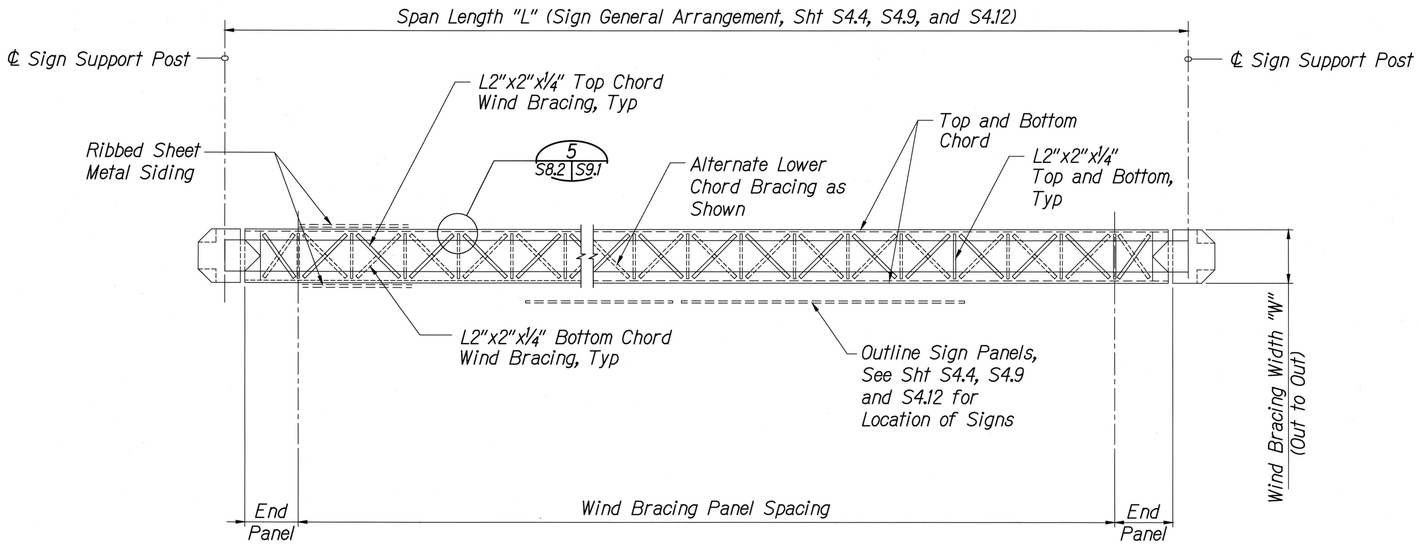

TYPICAL PLAN - TOP AND BOTTOM WIND BRACE FRAMING — 1 (S8.2 | S8.2)

Not to Scale

TYPE "C" SIGN FRAMING SCHEDULE

Sign Designation	Truss Panels		Wind Panels		Framing Sizes				Camber
	No.	Spacing	No.	Spacing	Wind Bracing Width "W"	Member "a" - T&B Chords	Member "b" - Vertical	Member "c" - Diagonal	
H1EB-308	8	Equal spaces	24	Equal spaces	2'-0"	L 5 x 3½ x ¾	L 3 x 3 x ¼	L 3 x 3 x ¼	½"
H1WB-605, 78WBR-871	10	Equal spaces	40	Equal spaces	2'-6"	L 6 x 4 x ⅞	L 3½ x 3 x ¼	L 3 x 3 x ¼	¾"

Note:

1. Camber shown is equivalent to the maximum calculated vertical dead load displacement of the truss.
2. The Contractor shall precamber the truss panels to account for the vertical dead load deflection.
3. Truss panels and wind panels including the end panels shall be equally spaced thruout the entire span length.

TYPE "C" DESIGNATION SIGN FRAMING SCHEDULE — 2 (S8.2 | S8.2)

Not to Scale

KEN KAZUO HAYASHIDA
LICENSED PROFESSIONAL ENGINEER
No. 6818-S
HAWAII, U.S.A.

EXPIRATION DATE OF THE LICENSE 4/30/2018
THIS WORK WAS PREPARED BY ME OR UNDER MY SUPERVISION

STATE OF HAWAII
DEPARTMENT OF TRANSPORTATION
HIGHWAYS DIVISION

TYPE "C" DESTINATION SIGN FRAMING PLAN AND SCHEDULE

INTERSTATE ROUTE H-1, H-2 AND H201
DESTINATION SIGN UPGRADE / REPLACEMENT, PHASE 2
Federal Aid Project NO. - NH-IM-0300(142)

Scale: As Shown Date: May 2016

SHEET No. S8.2 OF 191 SHEETS

P:\Drafting\2016-07-21_2239 Dot H1 H2 Signs Phase 2\41_2239_S8-2.dwg, 10/6/2016 7:34:26 AM, tamanaha

FED. ROAD DIST. NO.	STATE	FED. AID PROJ. NO.	FISCAL YEAR	SHEET NO.	TOTAL SHEETS
HAWAII	HAW.	NH-1M-0300(142)	2016	78	191

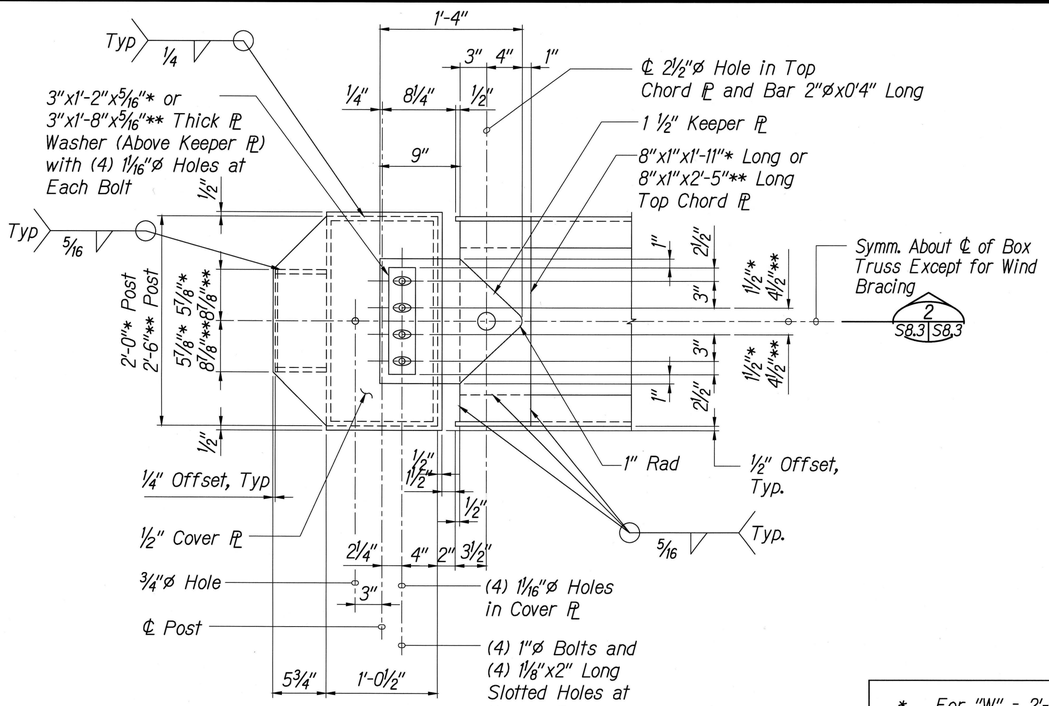

PLAN AT TOP OF COLUMN — 1 — S8.1 | S8.3

Not to Scale

* For "W" = 2'-0"
** For "W" = 2'-6"

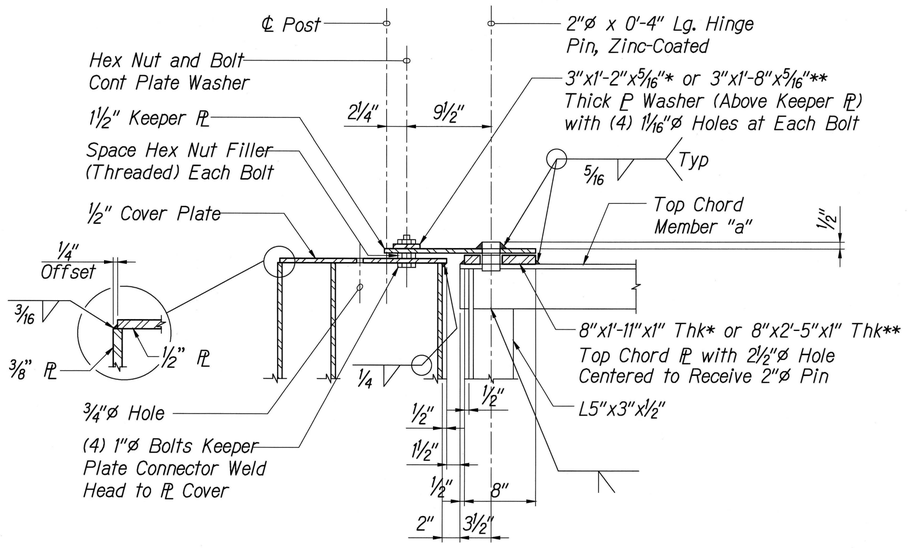

SECTION

TYP. UPPER JUNCTURE CONN. DETAIL — 2 — S8.3 | S8.3

Not to Scale

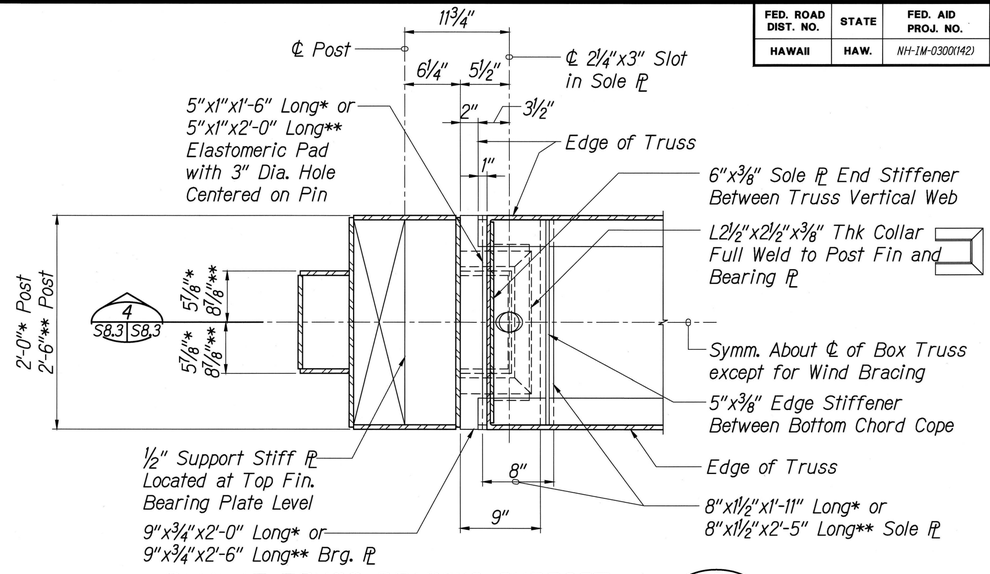

PLAN AT TRUSS BEARING SUPPORT — 3 — S8.1 | S8.3

Not to Scale

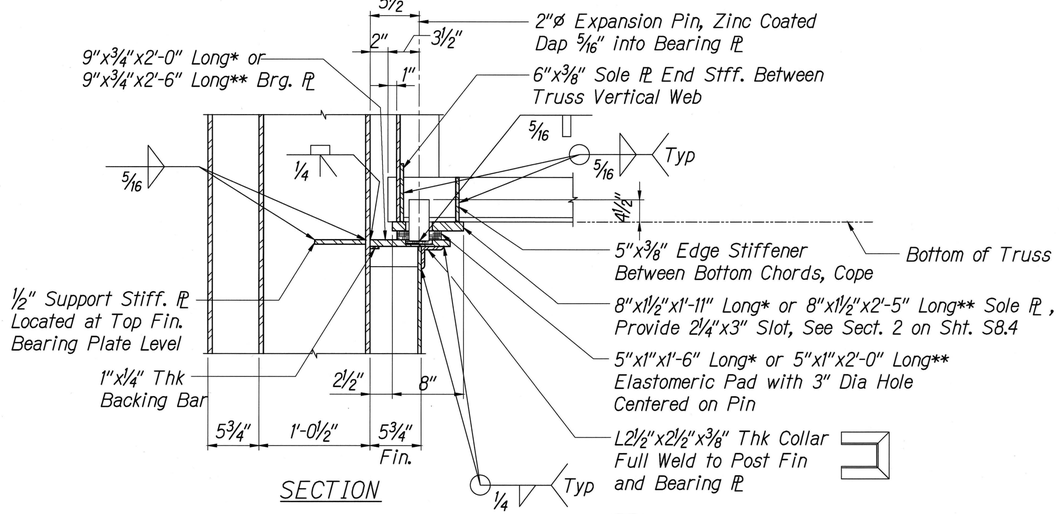

SECTION

TYP. LOWER JUNCTURE CONN. DETAIL — 4 — S8.3 | S8.3

Not to Scale

KEN KAZUO HAYASHIDA
LICENSED PROFESSIONAL ENGINEER
No. 6818-S
HAWAII, U.S.A.

EXPIRATION DATE OF THE LICENSE 4/30/2018
THIS WORK WAS PREPARED BY ME OR UNDER MY SUPERVISION

STATE OF HAWAII
DEPARTMENT OF TRANSPORTATION
HIGHWAYS DIVISION

TYPE "C" DESTINATION SIGN FRAME DETAILS

INTERSTATE ROUTE H-1, H-2 AND H201
DESTINATION SIGN UPGRADE / REPLACEMENT, PHASE 2
Federal Aid Project NO. - NH-IM-0300(142)

Scale: As Shown Date: May 2016

SHEET No. S8.3 OF 191 SHEETS

P:\Drafting\2016-07-21_2239 Dot H1 H2 Signs Phase 2\42_2239_S8-3.dwg, 10/6/2016 7:34:29 AM, tamanaha

FED. ROAD DIST. NO.	STATE	FED. AID PROJ. NO.	FISCAL YEAR	SHEET NO.	TOTAL SHEETS
HAWAII	HAW.	NH-IM-0300(142)	2016	79	191

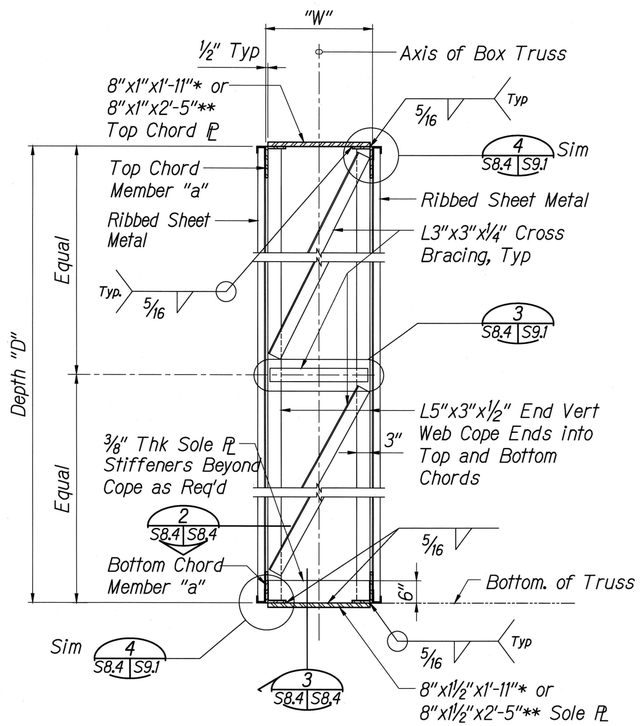

SECTION AT ENDS — 1 S8.1 | S8.4
Not to Scale

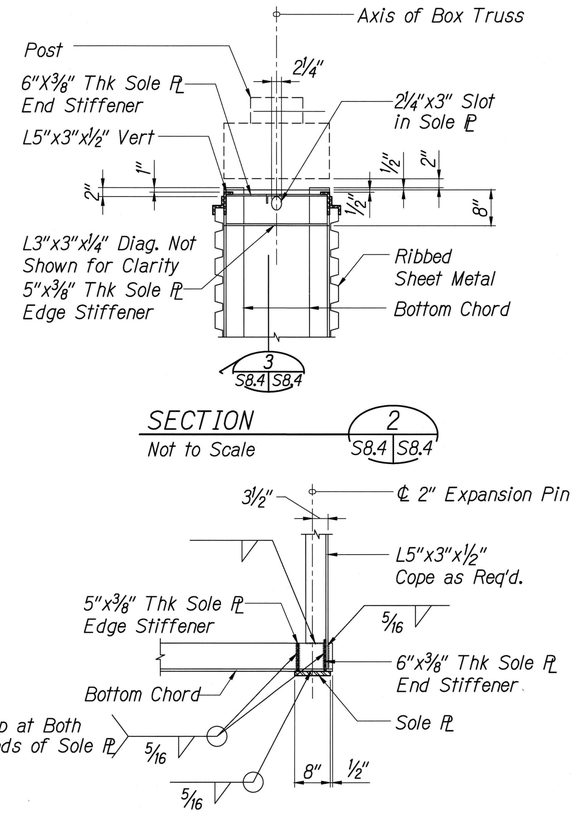

SECTION — 2 S8.4 | S8.4
Not to Scale

SECTION — 3 S8.4 | S8.4
Not to Scale

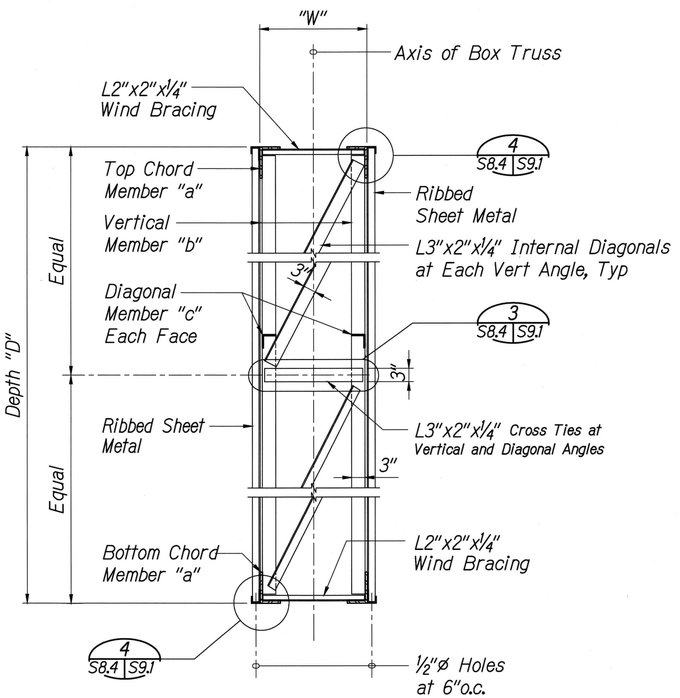

TYPICAL SECTION — 4 S8.1 | S8.4
Not to Scale

* For "W" = 2'-0"
** For "W" = 2'-6"

NOTES:
1. See S8.1 for sign frame elevations.
2. See S8.2 for sign frame schedule.

KEN KAZUO HAYASHIDA
LICENSED PROFESSIONAL ENGINEER
No. 6818-S
HAWAII, U.S.A.

EXPIRATION DATE OF THE LICENSE 4/30/2018
THIS WORK WAS PREPARED BY ME OR UNDER MY SUPERVISION

STATE OF HAWAII
DEPARTMENT OF TRANSPORTATION
HIGHWAYS DIVISION

TYPE "C" DESTINATION SIGN FRAME DETAILS

INTERSTATE ROUTE H-1, H-2 AND H201
DESTINATION SIGN UPGRADE / REPLACEMENT, PHASE 2
Federal Aid Project NO. - NH-IM-0300(142)
Scale: As Shown Date: May 2016

SHEET No. S8.4 OF 191 SHEETS

P:\Drafting\2016-07-21_2239 Dot H1 H2 Signs Phase 2\43_2239_S8-4.dwg, 10/6/2016 7:34:31 AM, tamanaha

FED. ROAD DIST. NO.	STATE	FED. AID PROJ. NO.	FISCAL YEAR	SHEET NO.	TOTAL SHEETS
HAWAII	HAW.	NH-IM-0300(142)	2016	80	191

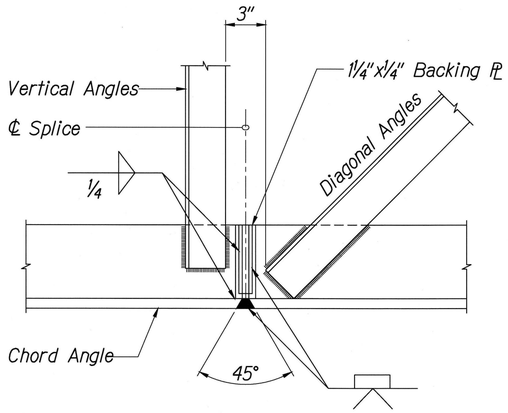

TYPICAL SHOP SPLICE DETAIL — 1 / S8.5 | S8.5

Not to Scale

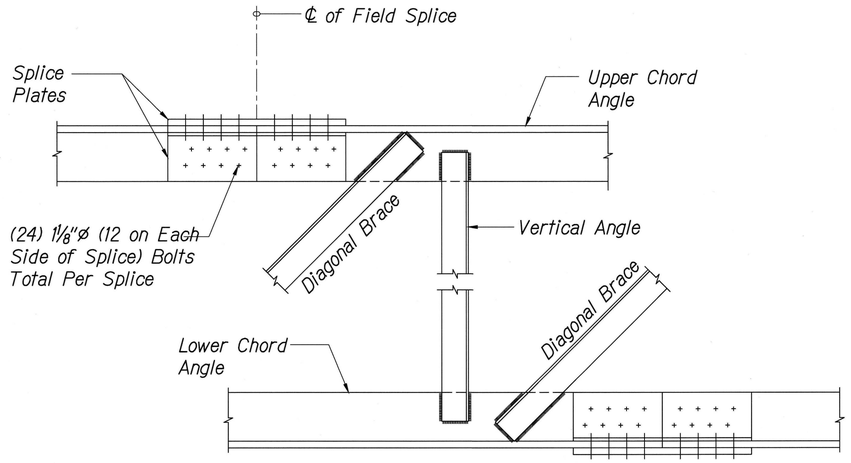

ELEVATION

BUILD UP PLATE

The plates welded to the angle legs on the inside shall be welded before punching the bolt holes. They shall be the same length as the splice plate.

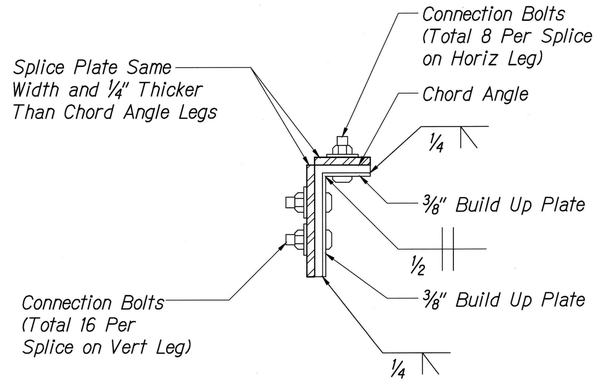

SECTION

FIELD SPLICE DETAIL — 2 / S8.5 | S8.5

Not to Scale

SPLICE NOTES:

1. Splices are allowed for Type "C" signs only. No splices are allowed for cantilever sign frames.
2. Splice location of top and bottom chords at each truss shall be staggered and at alternate locations. Submit splice locations on shop fabrication drawings to the Engineer for approval.
3. In no case shall splices be located at ends or near midspan of truss.
4. Threads of bolts shall be excluded from the shear plane.
5. Bolts shall be staggered so that no more than 2 bolts are aligned vertically.

KEN KAZUO HAYASHIDA
LICENSED PROFESSIONAL ENGINEER
No. 6818-S
HAWAII, U.S.A.

EXPIRATION DATE OF THE LICENSE 4/30/2018
THIS WORK WAS PREPARED BY ME OR UNDER MY SUPERVISION

STATE OF HAWAII
DEPARTMENT OF TRANSPORTATION
HIGHWAYS DIVISION

TYPE "C" DESTINATION SIGN FRAME DETAILS

INTERSTATE ROUTE H-1, H-2 AND H201
DESTINATION SIGN UPGRADE / REPLACEMENT, PHASE 2
Federal Aid Project NO. - NH-IM-0300(142)

Scale: As Shown Date: May 2016

SHEET No. S8.5 OF 191 SHEETS

P:\Drafting\2016-07-21_2239 Dot H1 H2 Signs Phase 2\44_2239_S8-5.dwg, 10/6/2016 7:34:34 AM, tamanaha

FED. ROAD DIST. NO.	STATE	FED. AID PROJ. NO.	FISCAL YEAR	SHEET NO.	TOTAL SHEETS
HAWAII	HAW.	NH-IM-0300(142)	2016	81	191

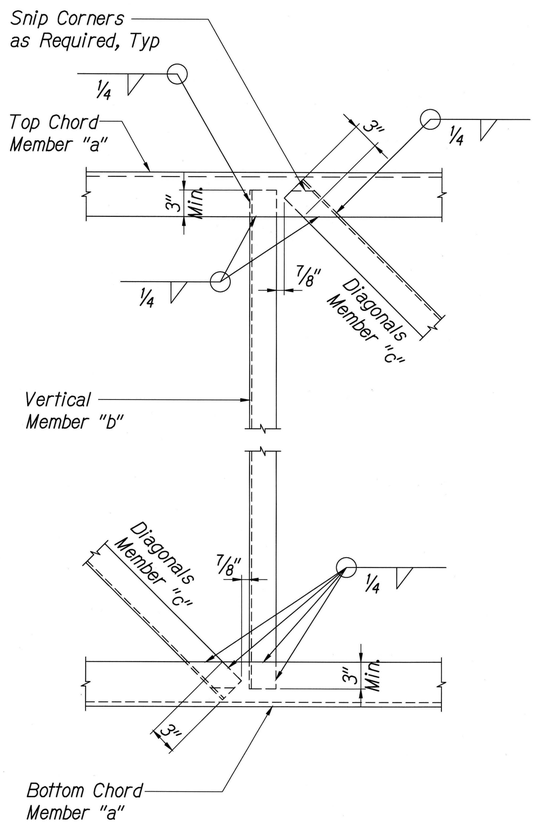

TYPICAL SECTION 1
Not to Scale S6.1, S7.1, S8.1 | S9.1

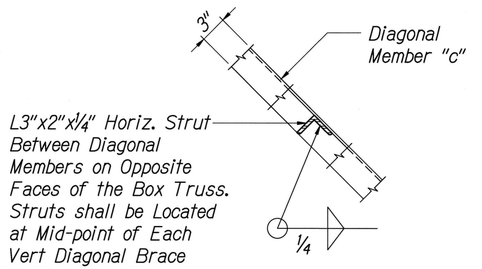

TYPICAL CONNECTION DETAIL 2
Not to Scale S6.1, S7.1, S8.1 | S9.1

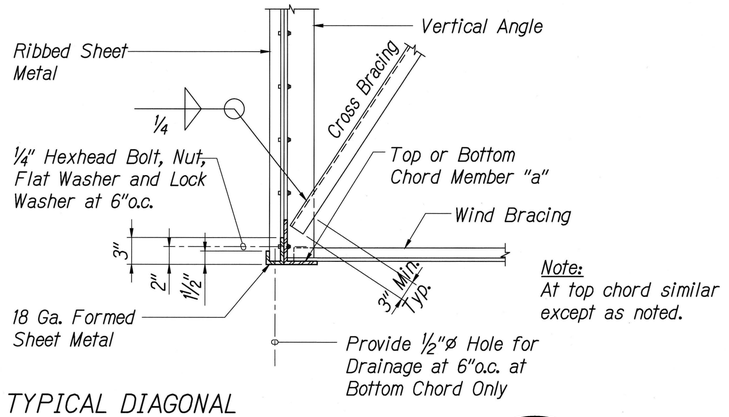

TYPICAL DIAGONAL CROSS BRACING CONNECTION DETAIL 4
Not to Scale S6.5, S7.5, S8.4 | S9.1

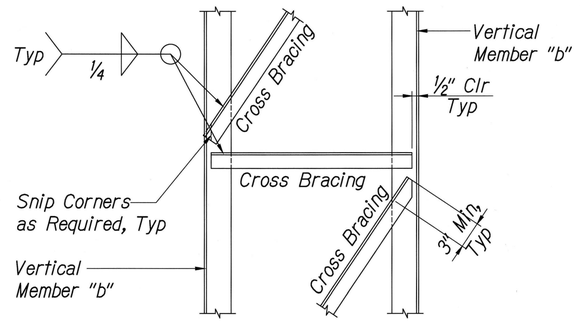

TYPICAL DETAIL 3
Not to Scale S6.5, S7.5, S8.4 | S9.1

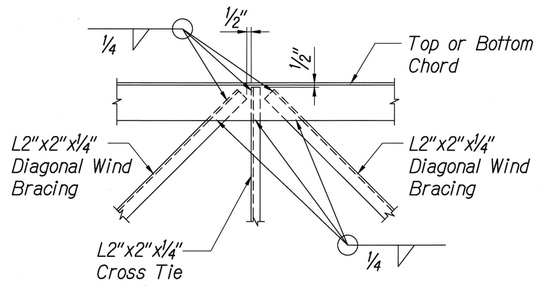

TYPICAL TOP AND BOTTOM WIND BRACING CONNECTION DETAIL 5
Not to Scale S6.1, S7.1, S8.2, | S9.1

KEN KAZUO HAYASHIDA
LICENSED PROFESSIONAL ENGINEER
No. 6818-S
HAWAII, U.S.A.

EXPIRATION DATE OF THE LICENSE 4/30/2018
THIS WORK WAS PREPARED BY ME OR UNDER MY SUPERVISION

STATE OF HAWAII
DEPARTMENT OF TRANSPORTATION
HIGHWAYS DIVISION

MISCELLANEOUS SIGN FRAME DETAILS

INTERSTATE ROUTE H-1, H-2 AND H201
DESTINATION SIGN UPGRADE / REPLACEMENT, PHASE 2
Federal Aid Project NO. - NH-IM-0300(142)
Scale: As Shown Date: May 2016

SHEET No. S9.1 OF 191 SHEETS

P:\Drafting\2016-07-21_2239 Dot H1 H2 Signs Phase 2\H5_2239_S9-1.dwg, 10/6/2016 7:34:36 AM, tamahana

FED. ROAD DIST. NO.	STATE	FED. AID PROJ. NO.	FISCAL YEAR	SHEET NO.	TOTAL SHEETS
HAWAII	HAW.	NH-IM-0300(142)	2016	82	191

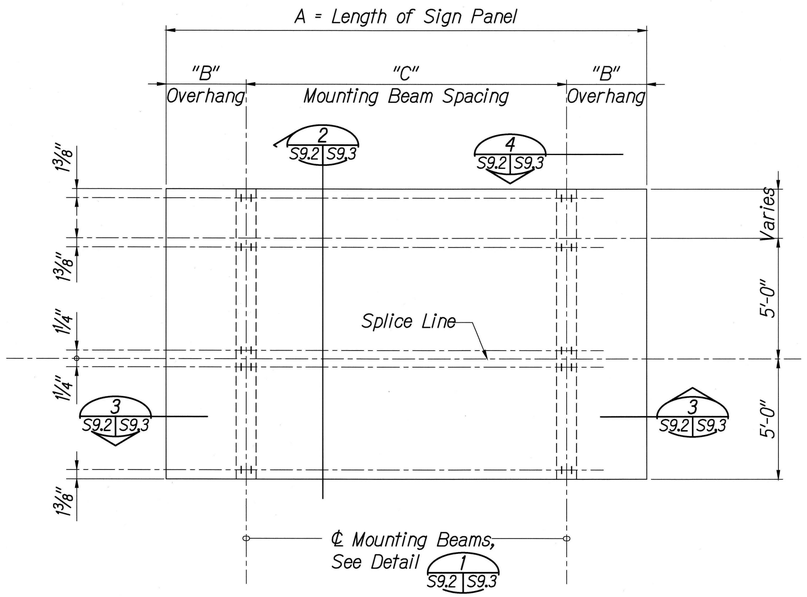

SIGN PANEL LENGTH 10'-6" TO 14'-0"

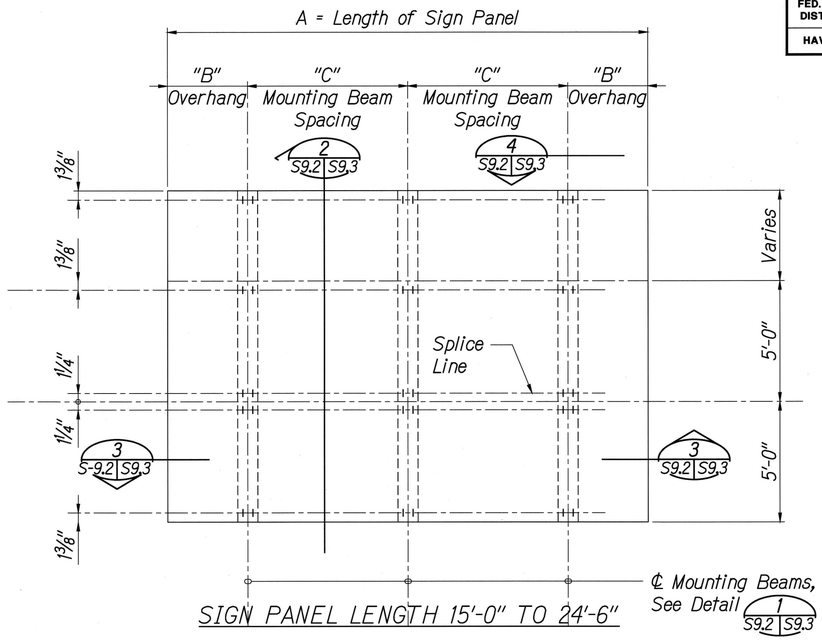

SIGN PANEL LENGTH 15'-0" TO 24'-6"

Notes:
1. For sign panel length, See S4.1 to S4.12.
2. See schedule on sheet S9.3 for "A", "B" and "C" dimensions.

TYPICAL SIGN PANEL ELEVATIONS — 1 S9.2 | S9.2
Not to Scale

KEN KAZUO HAYASHIDA
LICENSED PROFESSIONAL ENGINEER
No. 6818-S
HAWAII, U.S.A.

EXPIRATION DATE OF THE LICENSE 4/30/2018
THIS WORK WAS PREPARED BY ME OR UNDER MY SUPERVISION

STATE OF HAWAII
DEPARTMENT OF TRANSPORTATION
HIGHWAYS DIVISION

SIGN PANEL ELEVATIONS

INTERSTATE ROUTE H-1, H-2 AND H201
DESTINATION SIGN UPGRADE / REPLACEMENT, PHASE 2
Federal Aid Project NO. - NH-IM-0300(142)
Scale: As Shown Date: May 2016

SHEET No. S9.2 OF 191 SHEETS

P:\Drafting\2016-07-21_2239 Dot H1 H2 Signs Phase 2\46_2239_S9-2.dwg, 10/6/2016 7:34:39 AM, tamanaha

FED. ROAD DIST. NO.	STATE	FED. AID PROJ. NO.	FISCAL YEAR	SHEET NO.	TOTAL SHEETS
HAWAII	HAW.	NH-IM-0300(142)	2016	83	191

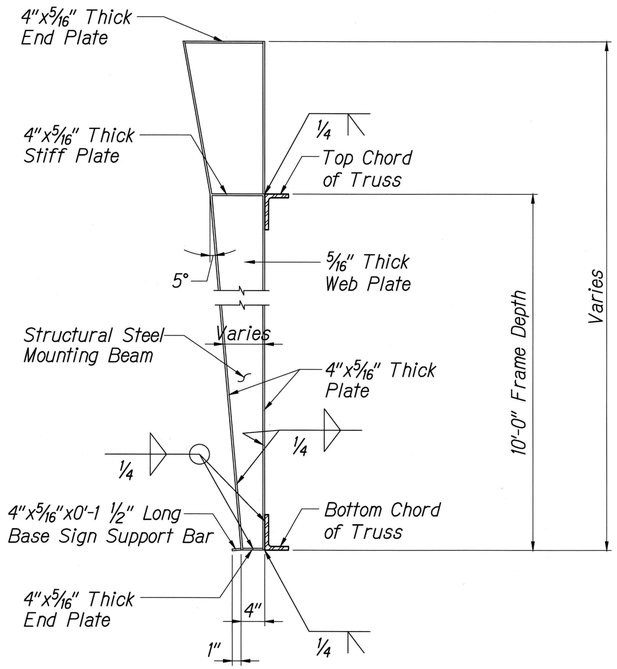

TYPICAL MOUNTING BEAM DETAIL — 1 (S9.3 | S9.3)
Not to Scale

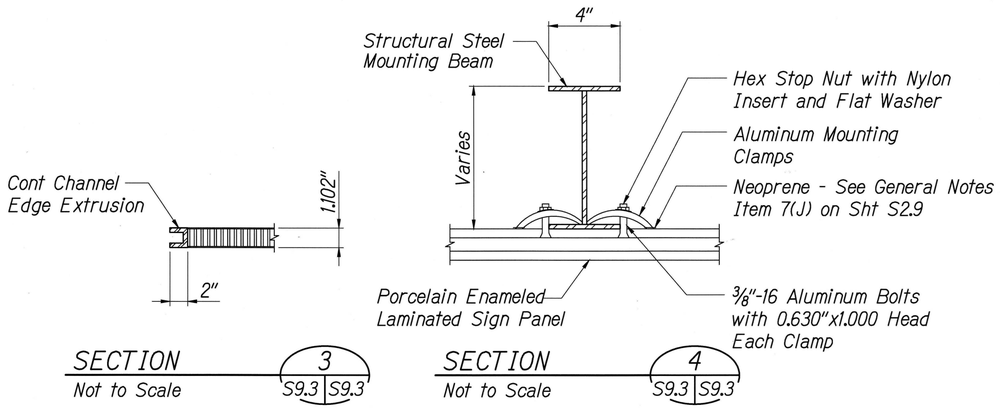

SECTION — 3 (S9.3 | S9.3)
Not to Scale

SECTION — 4 (S9.3 | S9.3)
Not to Scale

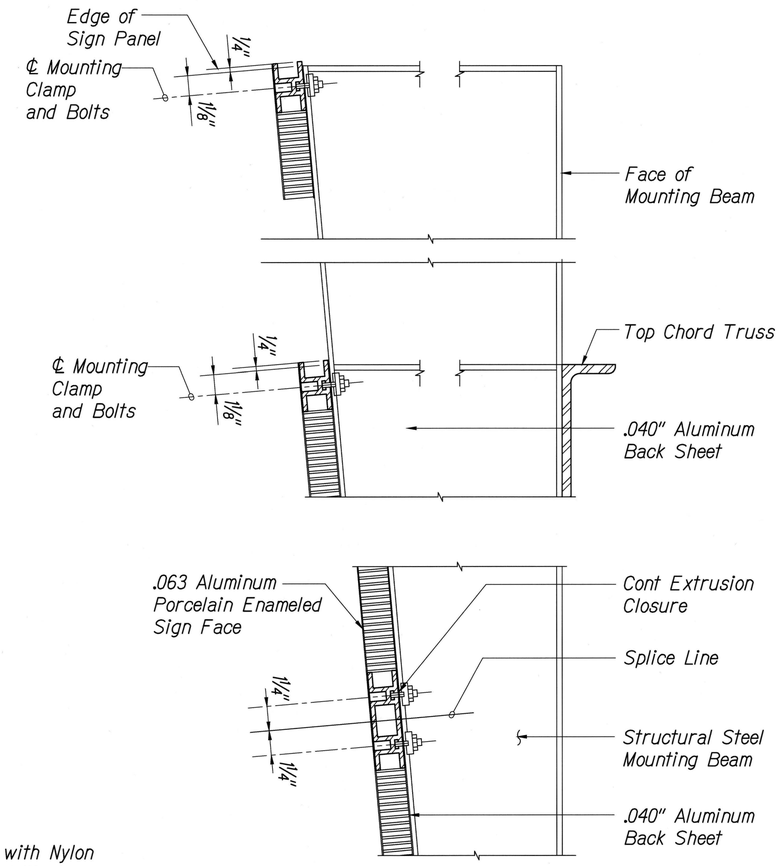

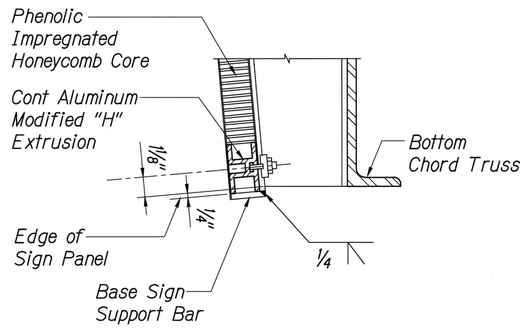

SECTION — 2 (S9.3 | S9.3)
Not to Scale

MOUNTING BEAM SCHEDULE

Sign Panel Length "A"	Number Mounting Beams	Overhang "B"	Mounting Beam Spacing "C"
10'-6"	2	15"	8'-0"
11'-6"	2	21"	8'-0"
12'-0"	2	24"	8'-0"
12'-6"	2	21"	9'-0"
13'-0"	2	24"	9'-0"
14'-0"	2	24"	10'-0"
14'-6"	3	3"	7'-0"
16'-0"	3	6"	7'-6"
17'-6"	3	9"	8'-0"
18'-0"	3	12"	8'-0"
19'-0"	3	12"	8'-6"
20'-0"	3	18"	8'-6"
21'-0"	3	18"	9'-0"
22'-6"	3	21"	9'-6"
23'-0"	3	24"	9'-6"
24'-6"	3	24"	10'-3"

Note:
Refer to Sht S9.2 for definitions of "A", "B", and "C".

Notes:

1. Laminated panel sign depths more than 60" require additional mounting clamps located 1 1/4"± each side of panel splice line. Exact location is dependent on sign panel manufacturer. Follow manufacturer's recommendations.
2. Torque aluminum sign panel mounting bolt to 100 inch-lbs.
3. All steel and aluminum members including clamps, bolts and other connections shall be able to resist the loads described in the general notes on Sht S3.1. Details and calculations shall be submitted to the Engineer for this approval.

KEN KAZUO HAYASHIDA
LICENSED PROFESSIONAL ENGINEER
No. 6818-S
HAWAII, U.S.A.

EXPIRATION DATE OF THE LICENSE 4/30/2018
THIS WORK WAS PREPARED BY ME OR UNDER MY SUPERVISION

STATE OF HAWAII
DEPARTMENT OF TRANSPORTATION
HIGHWAYS DIVISION

SIGN PANEL DETAILS

INTERSTATE ROUTE H-1, H-2 AND H201
DESTINATION SIGN UPGRADE / REPLACEMENT, PHASE 2
Federal Aid Project NO. - NH-IM-0300(142)
Scale: As Shown Date: May 2016

SHEET No. S9.3 OF 191 SHEETS

I:\Drafting\2016-07-21_2239 Dot H1 H2 Signs Phase 2\47_2239_S9-3.dwg, 10/6/2016 7:34:41 AM, tamanaha

FED. ROAD DIST. NO.	STATE	FED. AID PROJ. NO.	FISCAL YEAR	SHEET NO.	TOTAL SHEETS
HAWAII	HAW.	NH-IM-0300(142)	2016	84	191

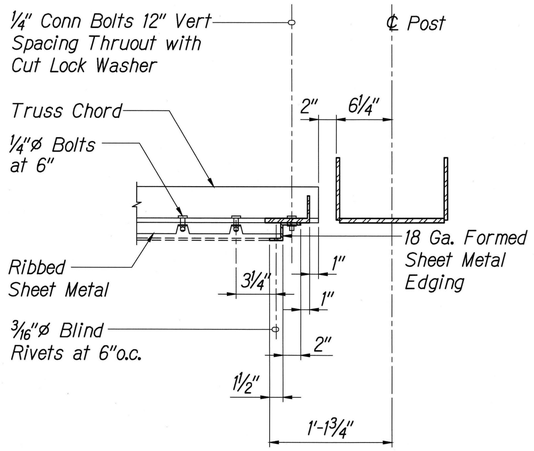

END AT SIGN SUPPORT FOR TWO POST SIGN STRUCTURE

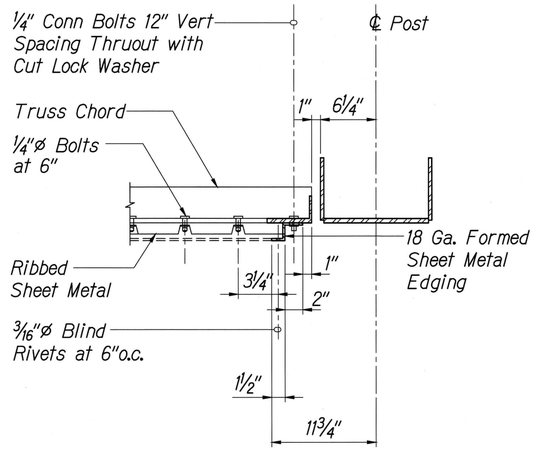

END AT SIGN SUPPORT FOR CANTILEVER SIGN STRUCTURE

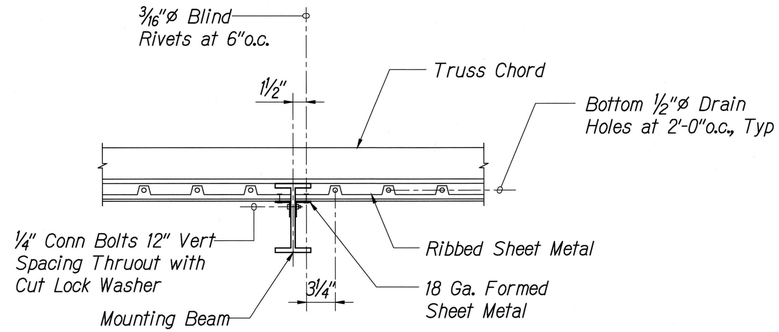

AT MOUNTING BEAM

TYPICAL HORIZONTAL SECTION AT POST — 2 — S9.4 | S9.4

Not to Scale

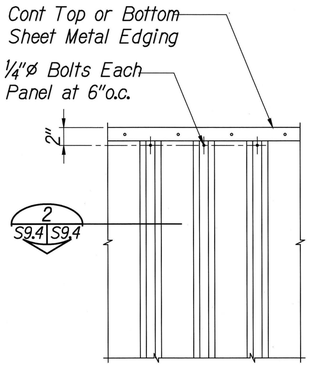

INTERMEDIATE

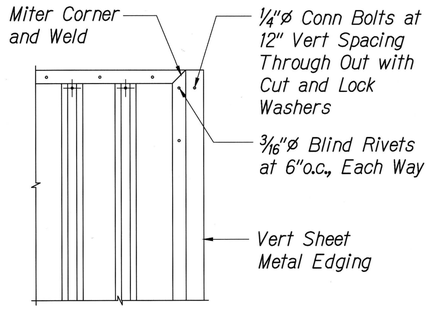

AT END OF TRUSS

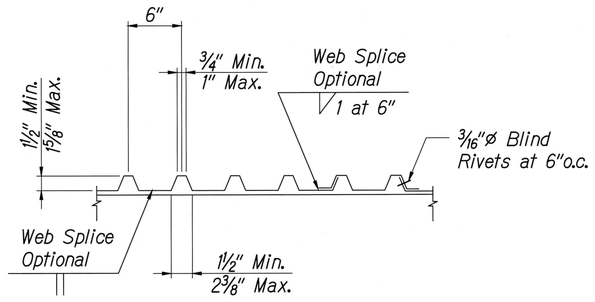

SECTION

TYPICAL RIBBED SHEET METAL DETAIL — 1 — S6.1, S7.1, S8.1 | S9.4

Not to Scale

RIBBED SHEET METAL NOTES:

1. All ribbed sheet metal formed edging and the connections shall be capable of resisting the loads described on S3.1. The ribbed sheet metal shall span from top chord to bottom chord, shop drawings and calculations shall be submitted to the Engineer for approval.
2. All ribbed sheet metal and formed edging shall be galvanized steel with a minimum 18 gage thickness conforming to A.S.T.M. designation A653-SS, grade 33 with a minimum yield of 38 ksi, G165. Coating designation shall conform to A.S.T.M. designation: A653, G60.
3. Connection bolts, nuts and washers to be hot-dip galvanized steel A.S.T.M. A307.
4. Blind rivets shall be galvanized and submitted to the Engineer for approval.

KEN KAZUO HAYASHIDA
LICENSED PROFESSIONAL ENGINEER
No. 6818-S
HAWAII, U.S.A.

EXPIRATION DATE OF THE LICENSE 4/30/2018
THIS WORK WAS PREPARED BY ME OR UNDER MY SUPERVISION

STATE OF HAWAII
DEPARTMENT OF TRANSPORTATION
HIGHWAYS DIVISION

RIBBED SHEET METAL DETAILS

INTERSTATE ROUTE H-1, H-2 AND H201
DESTINATION SIGN UPGRADE / REPLACEMENT, PHASE 2
Federal Aid Project NO. - NH-IM-0300(142)
Scale: As Shown Date: May 2016

SHEET No. S9.4 OF 191 SHEETS

C:\Drafting\2016-07-21_2239 Dot H1 H2 Signs Phase 2\48_2239_S9-4.dwg, 10/6/2016 7:34:44 AM, tamanaha