FED. ROAD DIST. NO.	STATE	FED. AID PROJ. NO.	FISCAL YEAR	SHEET NO.	TOTAL SHEETS
HAWAII	HAW.	IM-STP-0300(106)	2017	14	193

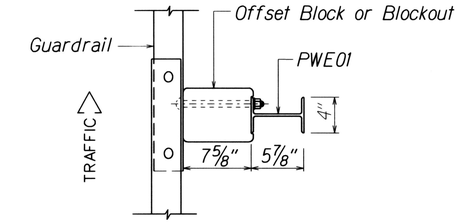

PLAN

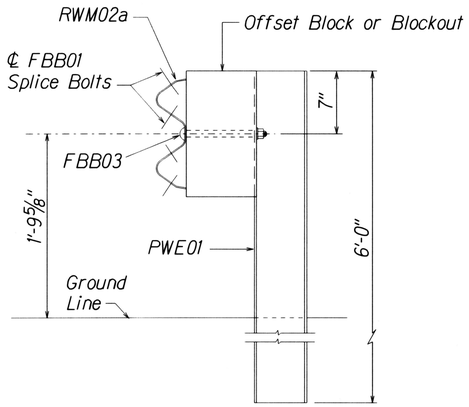

ELEVATION

STRONG POST W-BEAM GUARDRAIL

(SGR04a)

NOTE:
All Holes are
3/4" Dia.

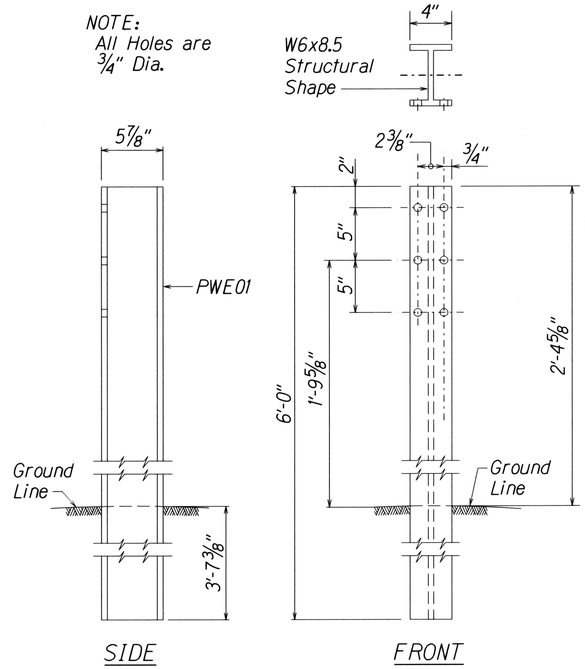

SIDE

FRONT

W-BEAM STRONG POST (PWE01)

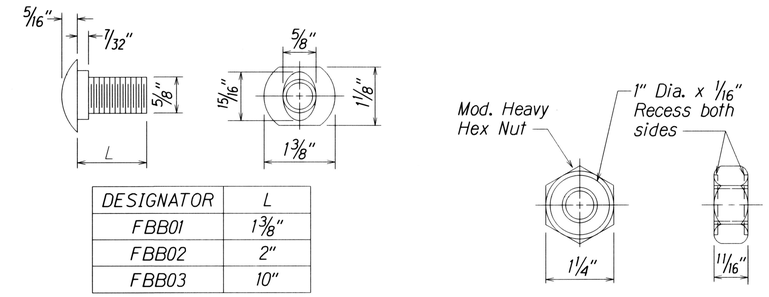

DESIGNATOR	L
FBB01	1 3/8"
FBB02	2"
FBB03	10"

GUARDRAIL BOLTS AND RECESSED NUT

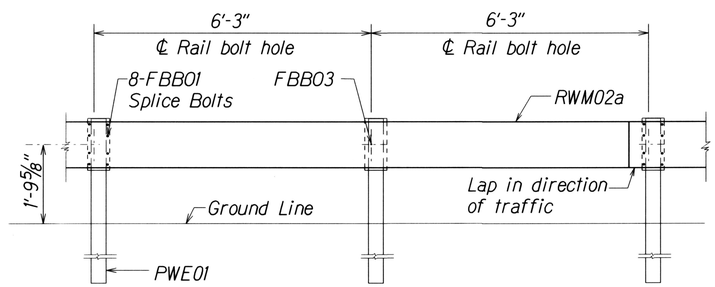

ELEVATION

STRONG POST W-BEAM GUARDRAIL WITH

RECYCLED OFFSET BLOCK OR PLASTIC BLOCKOUT

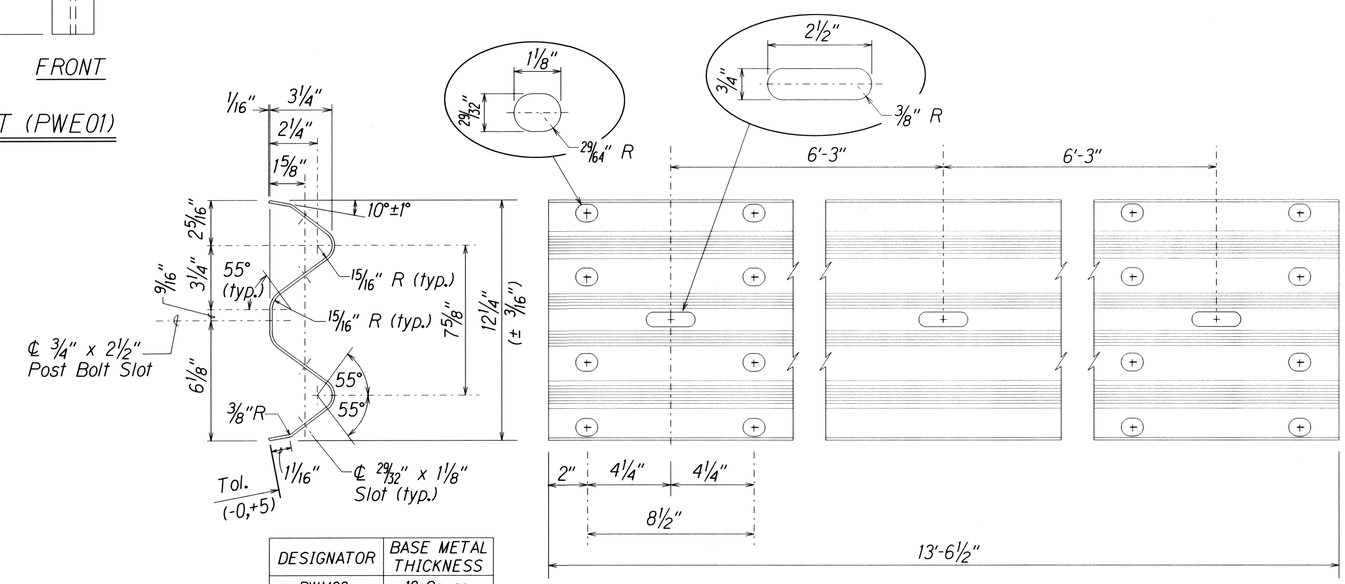

DESIGNATOR	BASE METAL THICKNESS
RWM02a	12 Gauge

2 SPACE W-BEAM GUARDRAIL (RWM02a)

STATE OF HAWAII
DEPARTMENT OF TRANSPORTATION
HIGHWAYS DIVISION

STRONG POST W-BEAM GUARDRAIL

INTERSTATE ROUTE H-2 and MOANALUA FREEWAY
Guardrail and Shoulder Improvements
Federal Aid Project No. IM-STP-0300(106)

Scale: NTS Date: April, 2017

SHEET No. 1 OF 12 SHEETS

ORIGINAL PLAN	SURVEY PLOTTED BY	DATE
	DRAWN BY	
	TRACED BY	
NOTE BOOK	DESIGNED BY	
	QUANTITIES BY	
N.	CHECKED BY	

rll:01:05 rdt:rdy guardrail/ wbeamsupgn (standard plan TE-50 (03/06-87)

FED. ROAD DIST. NO.	STATE	FED. AID PROJ. NO.	FISCAL YEAR	SHEET NO.	TOTAL SHEETS
HAWAII	HAW.	IM-STP-0300(106)	2017	15	193

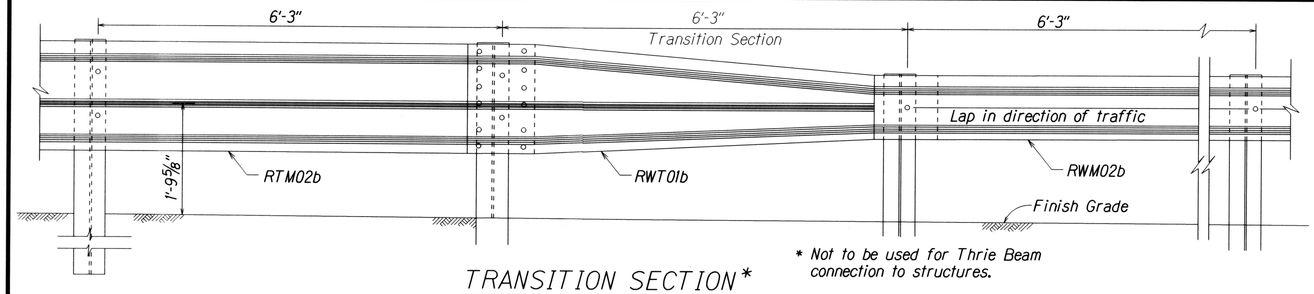

TRANSITION SECTION*

* Not to be used for Thrie Beam connection to structures.

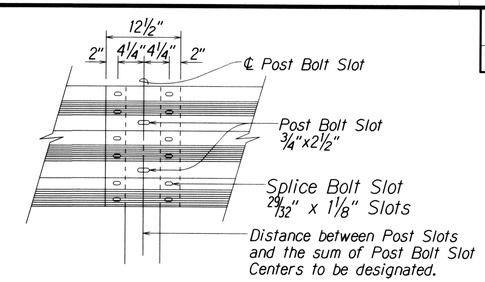

RAIL SPLICE

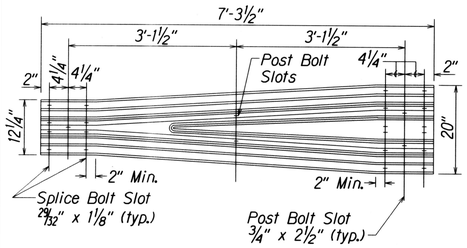

TRANSITION SECTION (RWT01b)

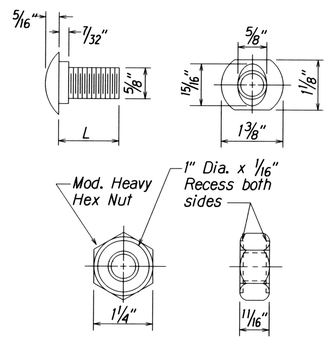

DESIGNATOR	L
FBB01	1⅜"
FBB02	2"
FBB03	10"

GUARDRAIL BOLTS AND RECESSED NUT

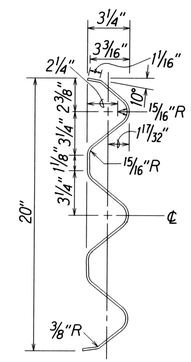

SECTION THRU RAIL ELEMENT (RTM02b)

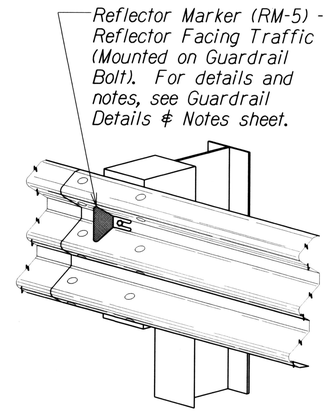

TYPICAL INSTALLATION OF REFLECTOR MARKER (RM-5)

NOTE:
All Holes are ¾" Dia.

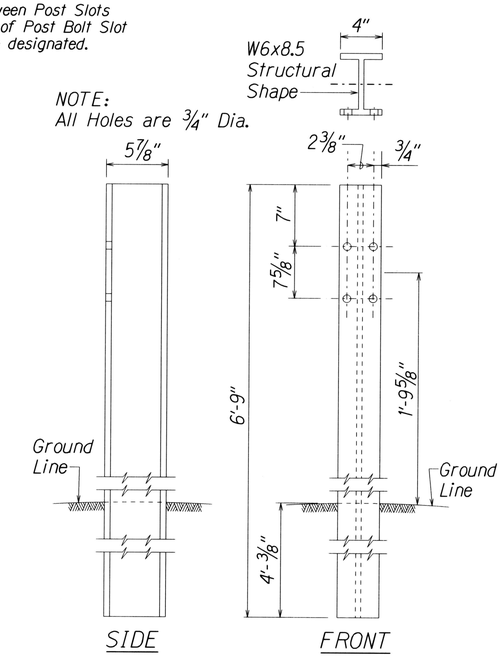

THRIE-BEAM STRONG POST FOR PLASTIC SPACER BLOCKS

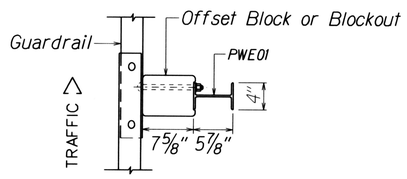

PLAN

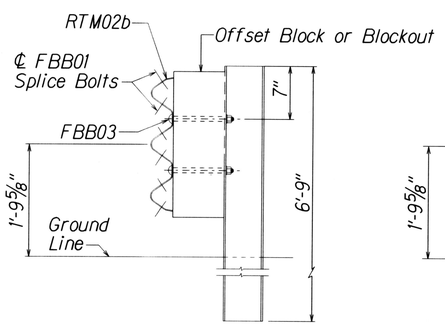

ELEVATION

STRONG POST THRIE-BEAM GUARDRAIL (SGR09a)

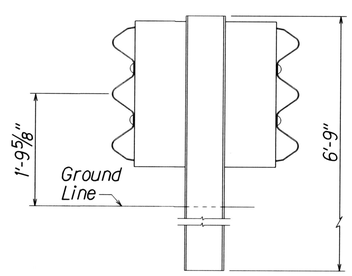

ELEVATION

STRONG POST THRIE-BEAM MEDIAN GUARDRAIL (SGM09a)

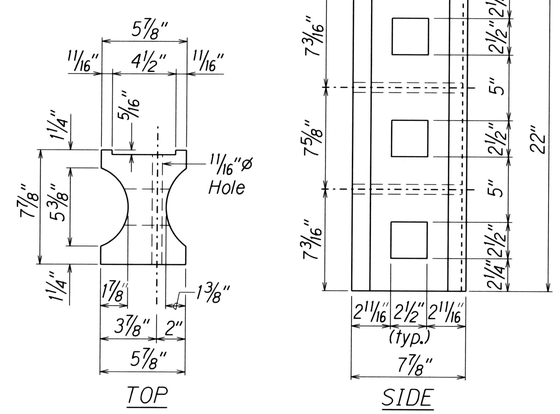

TOP

SIDE

MODIFIED 6X8X22 PLASTIC BLOCKOUT (TYPE I-THRIE)

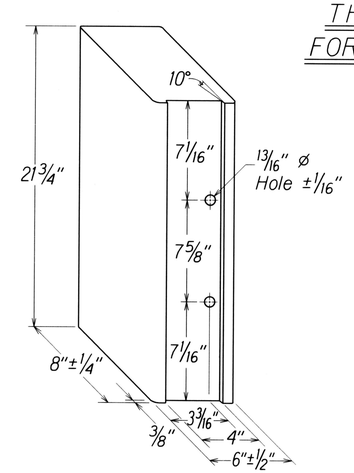

RECYCLED POLYETHYLENE THRIE-BEAM OFFSET BLOCK (TYPE II - THRIE)

STATE OF HAWAII
DEPARTMENT OF TRANSPORTATION
HIGHWAYS DIVISION

STRONG POST THRIE-BEAM GUARDRAIL

INTERSTATE ROUTE H-2 and MOANALUA FREEWAY
Guardrail and Shoulder Improvements
Federal Aid Project No. IM-STP-0300(106)

Scale: NTS Date: April, 2017

SHEET No. 2 OF 12 SHEETS

ORIGINAL PLAN | SURVEY PLOTTED BY | DRAWN BY | TRACED BY | DESIGNED BY | QUANTITIES BY | CHECKED BY | DATE
NOTE BOOK No.

11/01/05 tdl-bdy guardrail/thriebeamdgn standard plan TE-57 11/03/89 & TE-57a 11/03/89

FED. ROAD DIST. NO.	STATE	FED. AID PROJ. NO.	FISCAL YEAR	SHEET NO.	TOTAL SHEETS
HAWAII	HAW.	IM-STP-0300(106)	2017	16	193

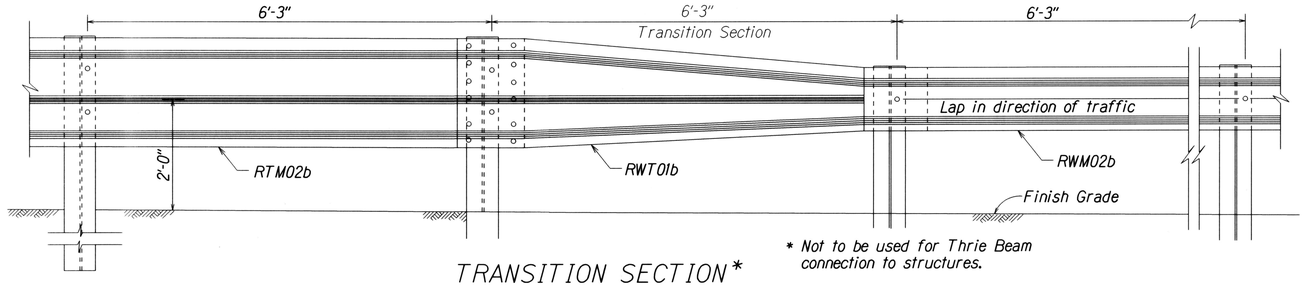

TRANSITION SECTION*

* Not to be used for Thrie Beam connection to structures.

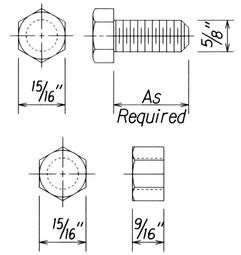

HEX BOLT & NUT (FBX16a)

NOTE: All Holes are 3/4" Dia.

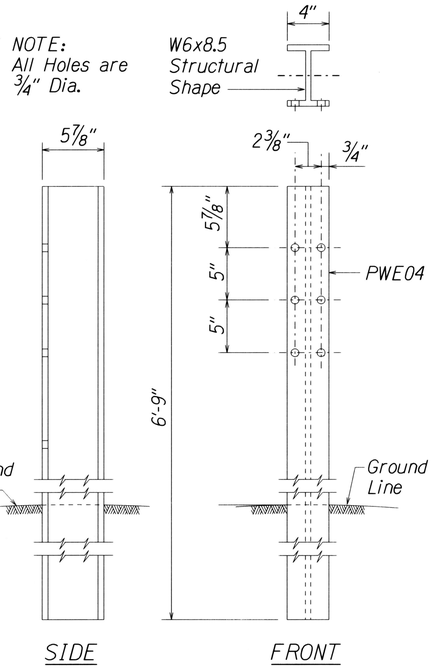

W-BEAM STRONG POST (PWE04)

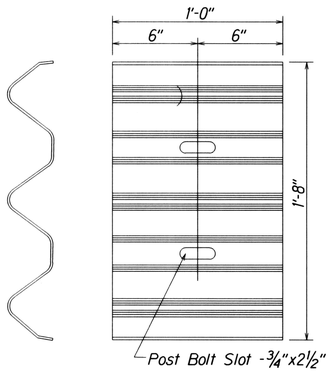

BACKUP PLATE (RTB01b)

(Use at Posts where Splices do not occur)

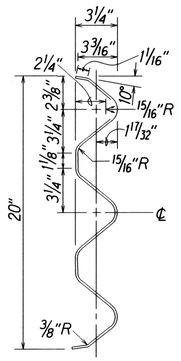

SECTION THRU RAIL ELEMENT (RTM02b)

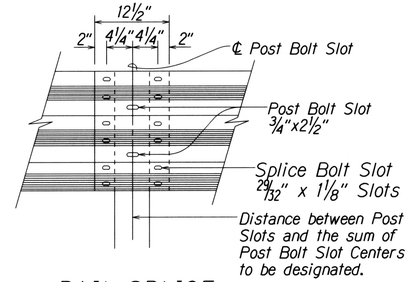

RAIL SPLICE

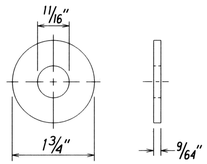

STEEL WASHER FOR 5/8" BOLT

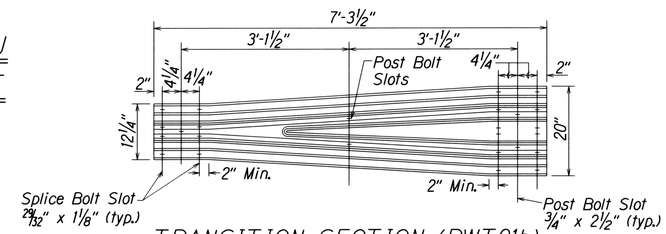

TRANSITION SECTION (RWT01b)

Reflector Marker (RM-5) - Reflector Facing Traffic (Mounted on Guardrail Bolt). For details and notes, see Guardrail Details & Notes sheet.

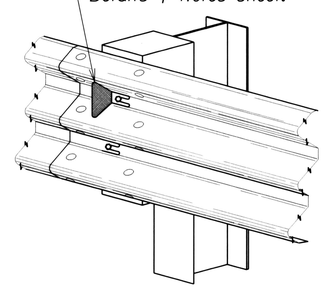

TYPICAL INSTALLATION OF REFLECTOR MARKER (RM-5)

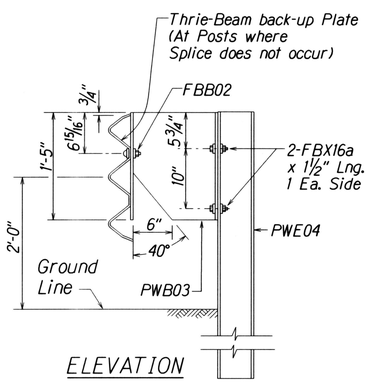

ELEVATION

STRONG POST MODIFIED THRIE-BEAM GUARDRAIL (SGR09b)

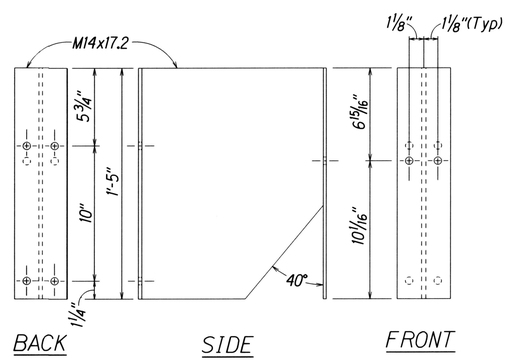

SPACER BLOCK PWB03

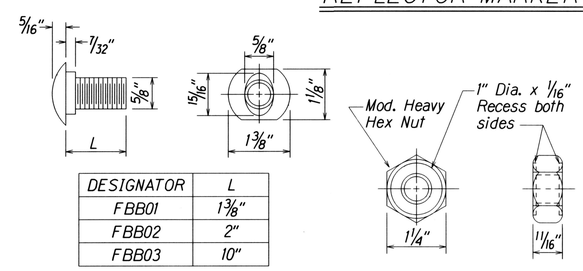

DESIGNATOR	L
FBB01	1 3/8"
FBB02	2"
FBB03	10"

GUARDRAIL BOLTS AND RECESSED NUT

STATE OF HAWAII
DEPARTMENT OF TRANSPORTATION
HIGHWAYS DIVISION

STRONG POST MODIFIED THRIE-BEAM GUARDRAIL

INTERSTATE ROUTE H-2 and MOANALUA FREEWAY

Guardrail and Shoulder Improvements

Federal Aid Project No. IM-STP-0300(106)

Scale: NTS Date: April, 2017

SHEET No. 3 OF 12 SHEETS

ORIGINAL PLAN	SURVEY PLOTTED BY	DATE
	DRAWN BY	
NOTE BOOK	TRACED BY	
	DESIGNED BY	
	QUANTITIES BY	
No.	CHECKED BY	

16/13/01 tdr-bdy guardrail/mothrieadgn standard plan TE-57 rlr/03.89 & TE-57a rlr/03.89

FED. ROAD DIST. NO.	STATE	FED. AID PROJ. NO.	FISCAL YEAR	SHEET NO.	TOTAL SHEETS
HAWAII	HAW.	IM-STP-0300(106)	2017	17	193

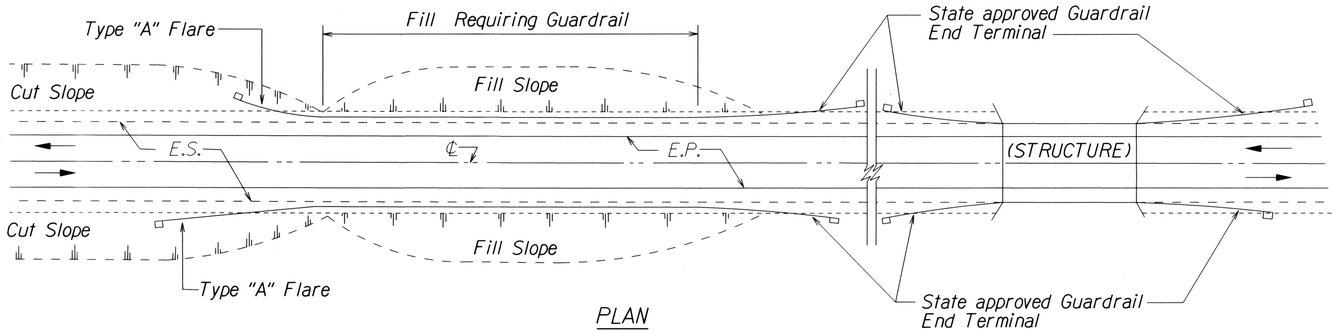

PLAN

TWO WAY ROADWAY

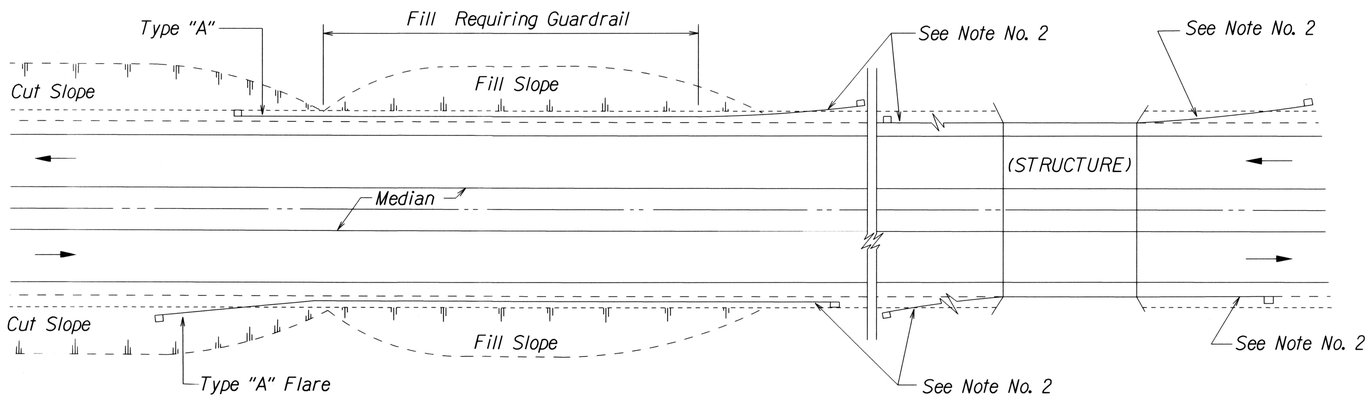

PLAN

ONE WAY ROADWAY (DIVIDED HIGHWAY)

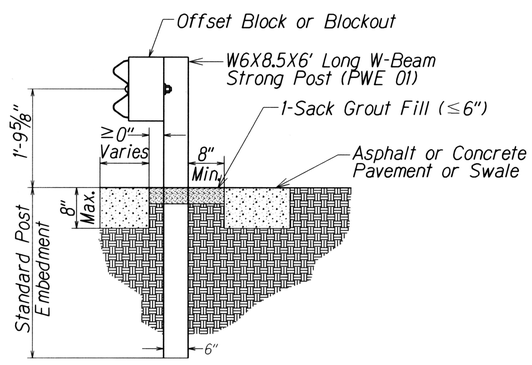

SECTION A-A

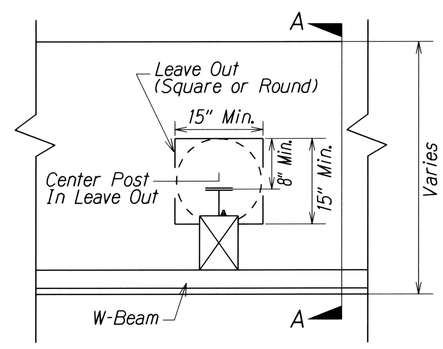

STEEL POST DETAIL

STRONG POST W-BEAM GUARDRAIL
POST IN PAVEMENT OR DRAINAGE SWALE

NOTES:

1. Metal Guardrail connection to concrete structures requires End Post Connection. See Structure Plans.
2. Depending on the existing field conditions, the Engineer shall determine which guardrail end terminal should be installed.
3. Refer to State's most current approved Product List for NCHRP 350 approved Guardrail End Terminals.

NOTES (STRONG POST W-BEAM IN ROCK):

1. Backfill of drilled holes shall be with compressible material, ASTM C33 Coarse Aggregate, Size No. 57.
2. Elongated 21-inch long hole can be accomplished by drilling three 8-inch diameter holes at 6 1/2-inches on center.

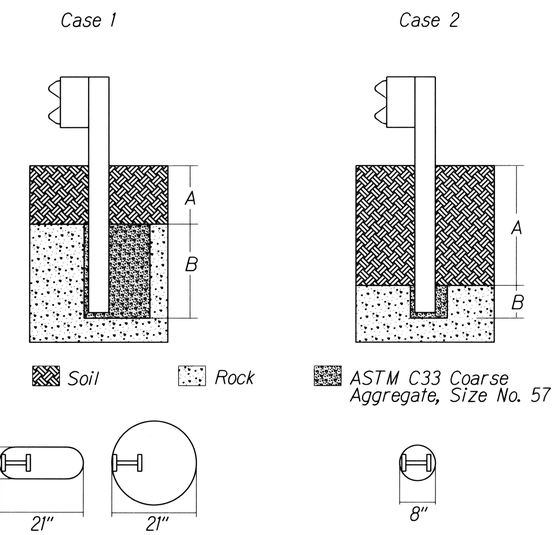

Plan View Steel Posts
Either hole configuration acceptable

(A) ranging from 0 to 18-inches, the depth of required drilling (B) is equal to 24-inches.

Overlying Soil Depths of 0 to 18-inches

(A) ranging from 18-inches to the embedment depth of the post, depth of required drilling (B) is equal to either 12-inches or the desired embedment depth minus the depth of soil whichever is less.

Overlying Soil Depths of 18 to 42-inches

STRONG POST W-BEAM GUARDRAIL IN ROCK

STATE OF HAWAII
DEPARTMENT OF TRANSPORTATION
HIGHWAYS DIVISION

GUARDRAIL DETAILS

INTERSTATE ROUTE H-2 and MOANALUA FREEWAY
Guardrail and Shoulder Improvements
Federal Aid Project No. IM-STP-0300(106)

Scale: NTS Date: April, 2017

SHEET No. 4 OF 12 SHEETS

ORIGINAL PLAN | SURVEY PLOTTED BY | DRAWN BY | TRACED BY | DESIGNED BY | QUANTITIES BY | CHECKED BY | DATE
NOTE BOOK No.

10/22/15 tdl ruby guardrail 16stre_ET.dgn

FED. ROAD DIST. NO.	STATE	FED. AID PROJ. NO.	FISCAL YEAR	SHEET NO.	TOTAL SHEETS
HAWAII	HAW.	IM-STP-0300(106)	2017	18	193

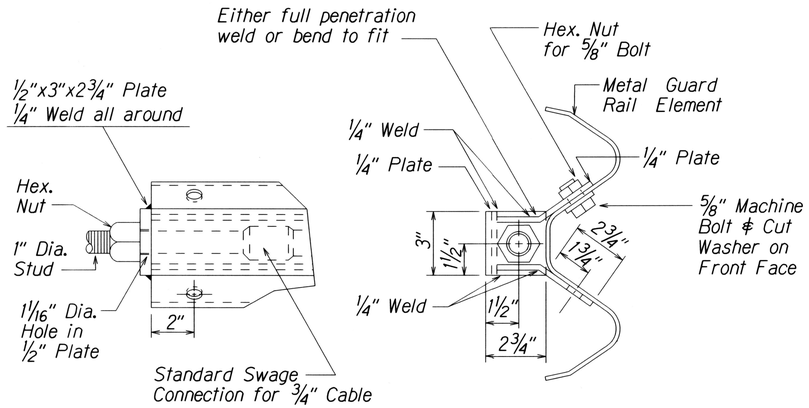

ANCHOR PLATE DETAILS

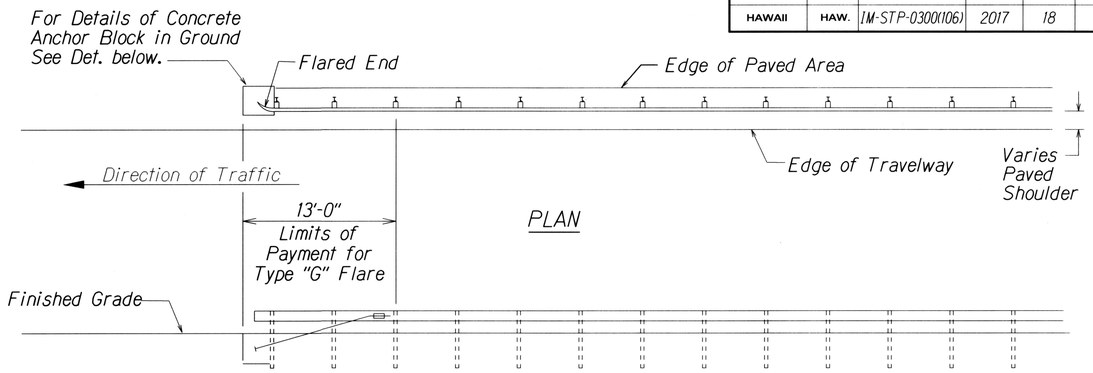

ELEVATION

TYPE "G" FLARE END TERMINAL

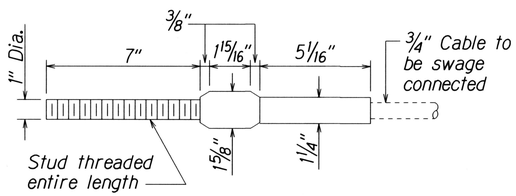

STANDARD SWAGED FITTING AND STUD

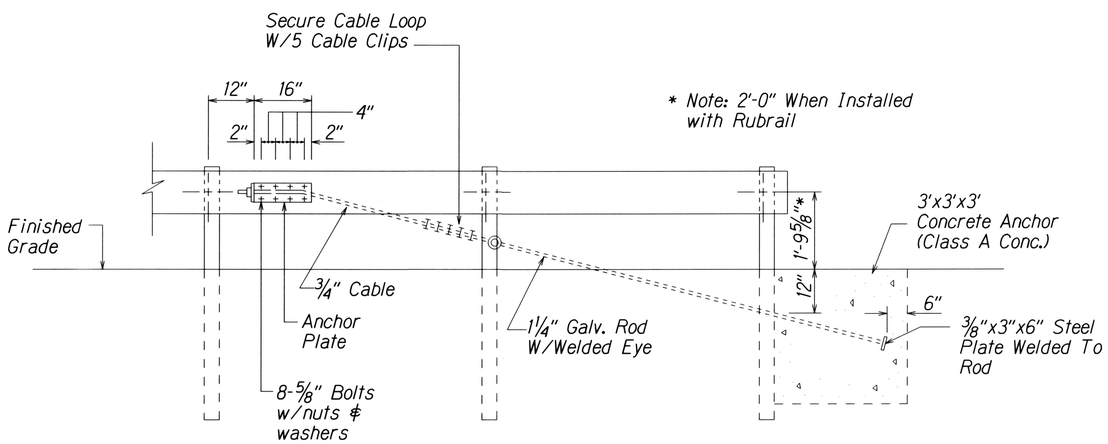

ANCHOR BLOCK DETAIL

1. Concrete, G.R.P., excavation, anchor rod and miscellaneous appurtenances necessary to anchor the guardrail ends shall be incidental to metal guardrail.

NOTE:

Type "G" Modified End Terminal is a site specific end terminal with a taper and radial termini. A site specific detailed drawing is required for all Type "G" Modified End Terminal and must receive Engineer's approval.

The taper (flare rate) of the guardrail shall follow the latest edition of AASHTO'S Roadside Design Guide (currently, Table 5.6 - Suggested Flare Rate for Barrier Design, page 5-21, Jan. 1996 edition).

The radius of the radial termini is an Engineer's judgement based on the site evaluation. The Engineer shall consider safety (minimize the spearing & blunt end situation); degree and potential seriousness of the hazard; bicycle and pedestrian accessibility; maintenance equipment accessibility; Right-of-Way availability; the smallest radii the metal w-beam/thrie-beam railing can be constructed (check with supplier/contractor); posted speed limit; angle of vehicle impact; and aesthetics when designing the Type "G" Modified End Terminal.

During construction, the Contractor shall layout the proposed Type "G" Modified End Terminal and receive approval from the Construction Engineer prior to installation.

ORIGINAL PLAN	SURVEY PLOTTED BY	DATE
	DRAWN BY	
NOTE BOOK	TRACED BY	
	DESIGNED BY	
N.	QUANTITIES BY	
	CHECKED BY	

r:2/13/02 tdf:dby /guardrail/fe59fredgh (standard plan TE-59 (11/03/89)

STATE OF HAWAII
DEPARTMENT OF TRANSPORTATION
HIGHWAYS DIVISION

GUARDRAIL DETAILS

INTERSTATE ROUTE H-2 and MOANALUA FREEWAY
Guardrail and Shoulder Improvements
Federal Aid Project No. IM-STP-0300(106)

Scale: NTS Date: Dec., 2016

SHEET No. 5 OF 12 SHEETS

FED. ROAD DIST. NO.	STATE	FED. AID PROJ. NO.	FISCAL YEAR	SHEET NO.	TOTAL SHEETS
HAWAI'I	HAW.	IM-STP-300(106)	2017	19	193

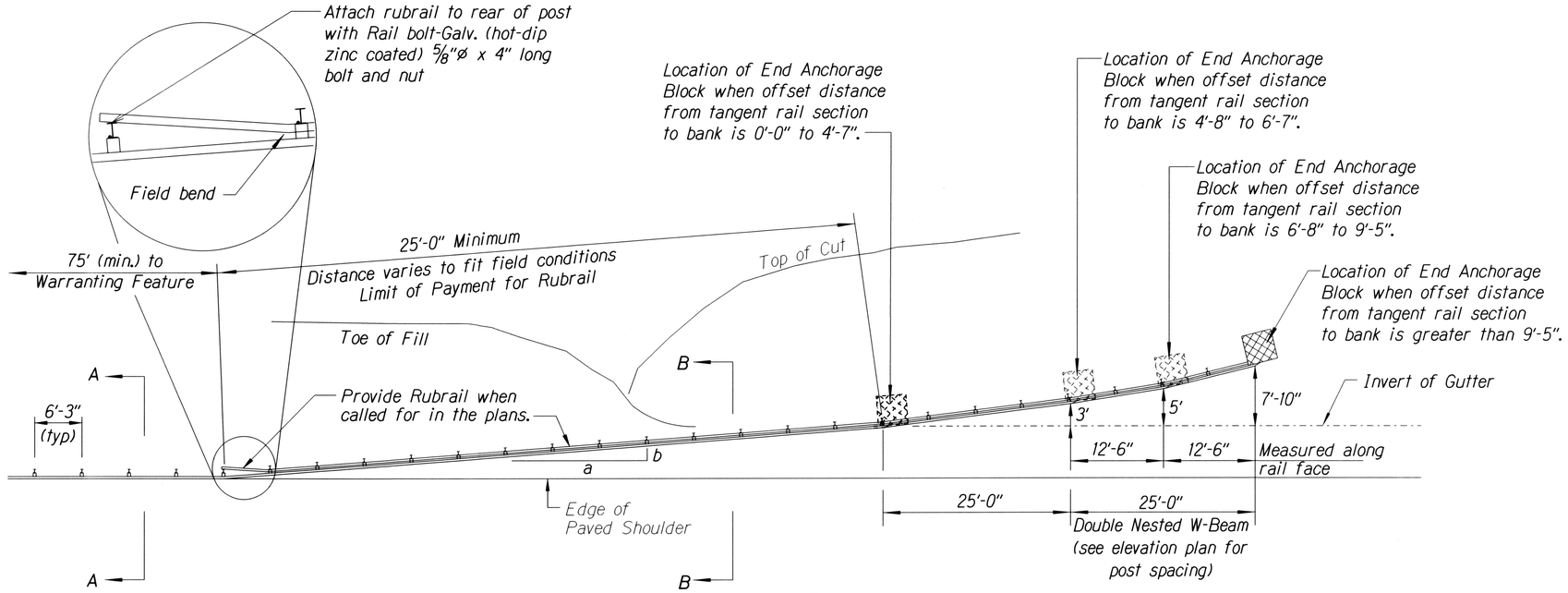

PLAN

Design speed mph	a:b
68	15:1
62	13:1
56	12:1
50	11:1
43	10:1
37	9:1
31	7:1

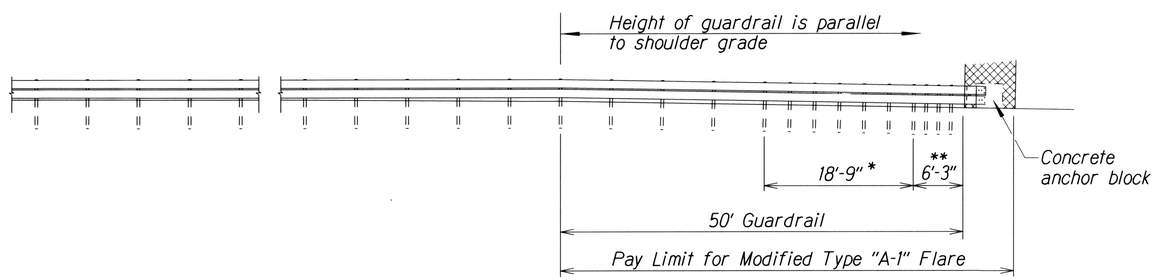

* Posts at 3'-1½" o.c.
** Posts at 1'-6¾" o.c.

ELEVATION (Profile Along Rail)

General Notes

1. All posts are 6'-0" in length within the 50'-0" pay limit for the Modified Type "A-1" Flare without rubrail.
2. Whenever swales or a change in grade is encountered within the 50'-0" pay limit for the Modified Type "A-1" Flare, a rubrail shall be installed and all posts shall have a minimum embedment of 4'-0". Post lengths shall be adjusted to provide the minimum embedment.
3. All fasteners, posts, blocks and rail elements shall conform to the latest edition and amendments of "A Guide to Standardized Highway Barrier Rail Hardware", a report prepared and approved by the AASHTO-AGCARTBA Joint Cooperative Committee and HDOT's Statewide Guideline for Permanent Highway Safety Hardware.
4. Limit of payment for Modified Type "A-1" Flare shall be 50'-0" from End Shoe including Rubrail (when applicable), Anchor Block and GRP work.
5. Excavation, Anchor Block and GRP work shall be considered incidental to the Modified Type "A-1" Flare.

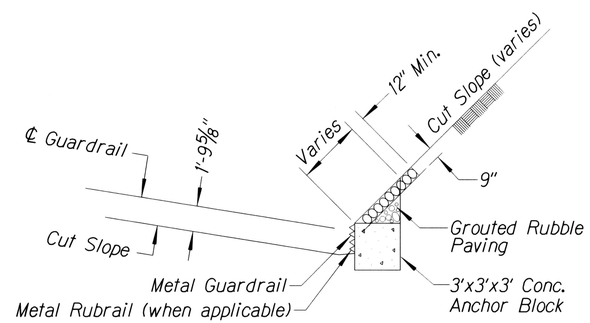

ANCHOR BLOCK IN CUT SECTION

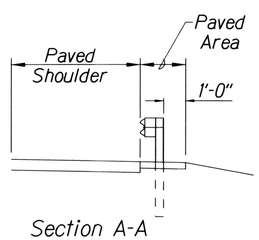

Section A-A

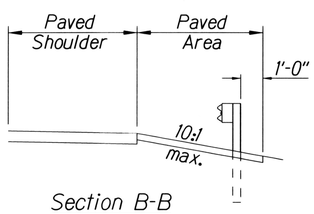

Section B-B

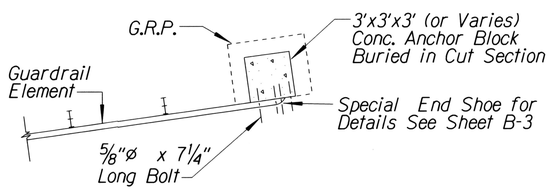

PLAN - ANCHOR BLOCK IN CUT SECTION

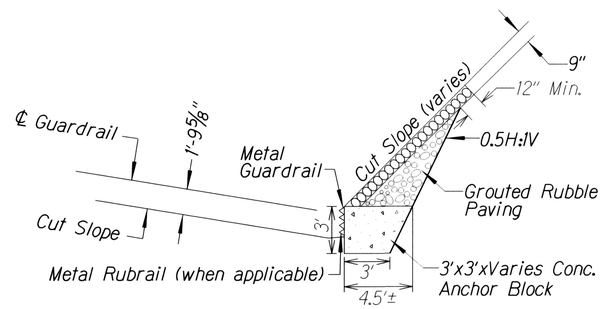

ANCHOR BLOCK IN CUT SECTION WITH SLOP STABILITY CONCERNS

STATE OF HAWAI'I
DEPARTMENT OF TRANSPORTATION
HIGHWAYS DIVISION

MODIFIED TYPE "A-1" FLARE

INTERSTATE ROUTE H-2 and MOANALUA FREEWAY
Guardrail and Shoulder Improvements
Federal Aid Project No. IM-STP-0300(106)

Scale: NTS Date: April, 2017

SHEET No. 6 OF 12 SHEETS

ORIGINAL PLAN	SURVEY PLOTTED BY	DATE
	DRAWN BY	
	TRACED BY	
NOTE BOOK	DESIGNED BY	
X	QUANTITIES BY	
N.	CHECKED BY	

10/22/15 hdr.cdy rguardrail1flare_al_i_B10A.dgn (standard plan TF-58 07/01/86, TF-59 01/03/89 & TF-60 07/01/86)

FED. ROAD DIST. NO.	STATE	FED. AID PROJ. NO.	FISCAL YEAR	SHEET NO.	TOTAL SHEETS
HAWAII	HAW.	IM-STP-0300(106)	2017	20	193

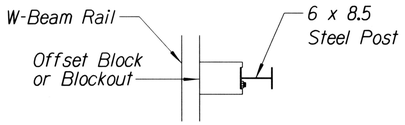

Plan

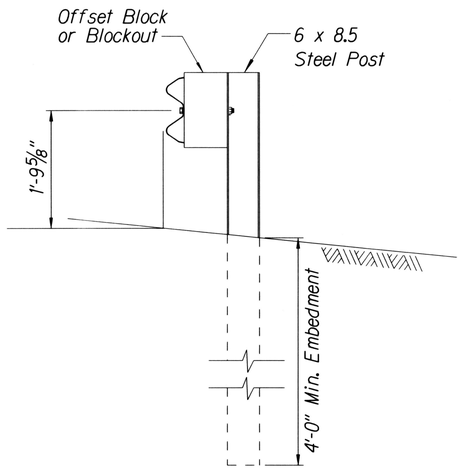

Elevation

STRONG POST W-BEAM GUARDRAIL

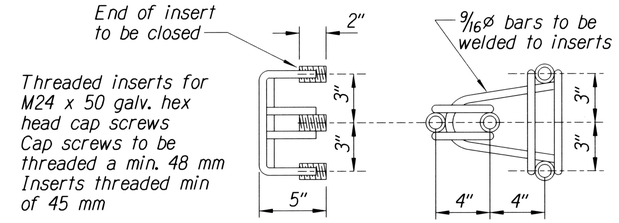

ANCHOR ASSEMBLY
CONCRETE BLOCK ANCHOR

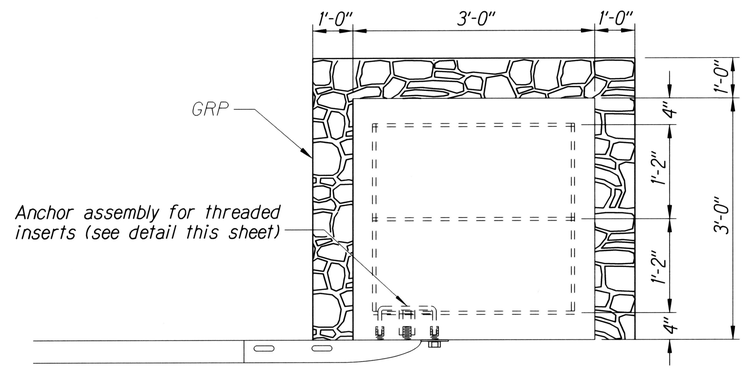

Plan

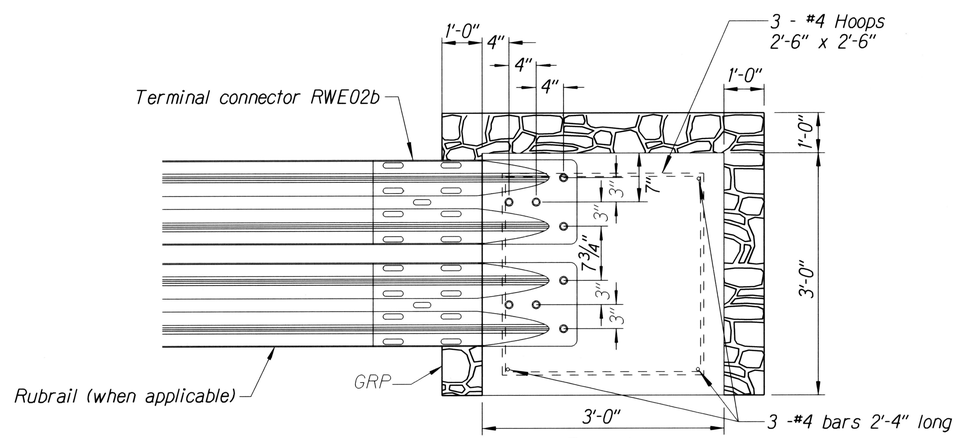

Elevation

CONCRETE BLOCK ANCHOR
(3' X 3' X 3')

BACKSLOPE ANCHOR TERMINAL END ANCHORAGE DETAILS
MODIFIED TYPE "A-1" FLARE

Note:

All fasteners, posts, blocks and rail elements shall conform to the latest edition and amendments of "A Guide to Standardized Highway Barrier Rail Hardware," a report prepared and approved by the AASHTO-AGCART'BA Joint Cooperative Committee and HDOT's Statewide Guideline for Permanent Highway Safety Hardware.

ORIGINAL PLAN	SURVEY PLOTTED BY	DATE
	DRAWN BY	
	TRACED BY	
NOTE BOOK	DESIGNED BY	
X	QUANTITIES BY	
X	CHECKED BY	
No.		

f5-2-01 rdrubly guardrail flare_al_2.dgn (standard plan TE-52 07/01/86, TE-59 01/03/89 & TE-60 07/01/86)

STATE OF HAWAII
DEPARTMENT OF TRANSPORTATION
HIGHWAYS DIVISION

MODIFIED TYPE "A-1" FLARE

INTERSTATE ROUTE H-2 and MOANALUA FREEWAY
Guardrail and Shoulder Improvements
Federal Aid Project No. IM-STP-0300(106)

Scale: NTS Date: April, 2017

SHEET No. 7 OF 12 SHEETS

FED. ROAD DIST. NO.	STATE	FED. AID PROJ. NO.	FISCAL YEAR	SHEET NO.	TOTAL SHEETS
HAWAII	HAW.	IM-STP-0300(106)	2017	21	193

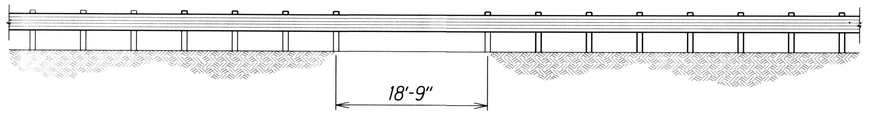

LONG SPAN OVER CULVERT

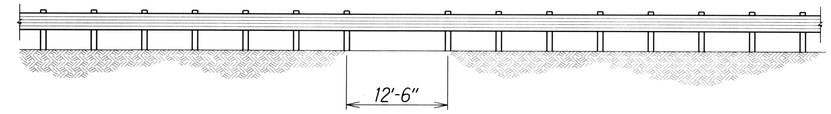

LONG SPAN OVER CULVERT

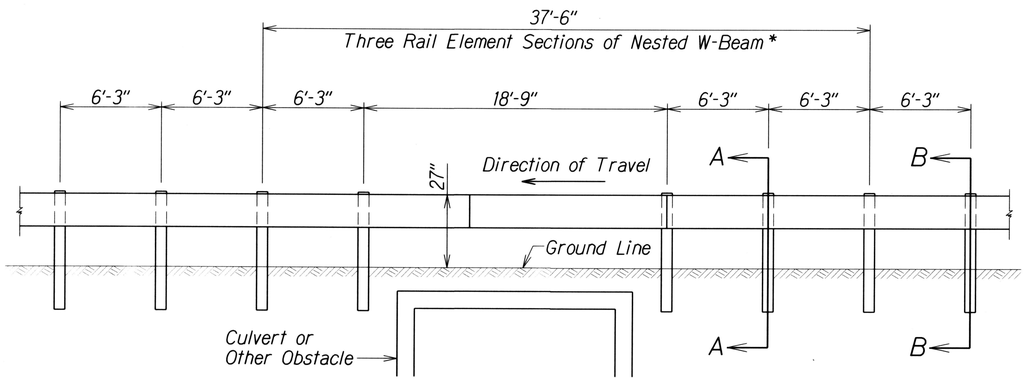

NESTED LONG SPAN STRONG POST
W-BEAM GUARDRAIL OVER 18'-9" CULVERT
(MAXIMUM DYNAMIC DEFLECTION OF 3.2 FT.)

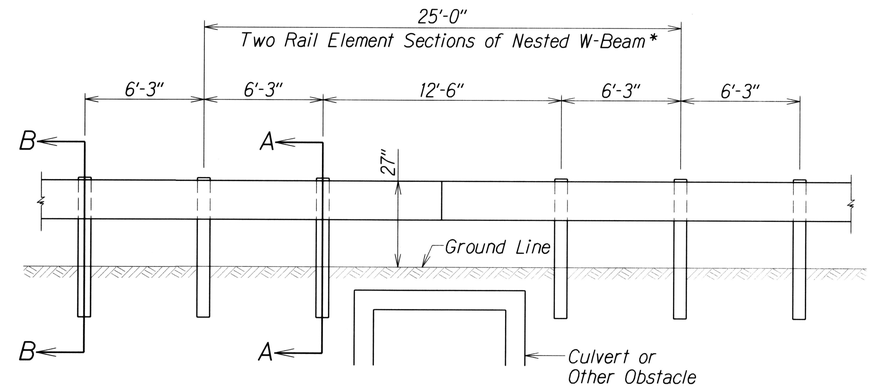

(SPLICE IN CENTER OF 12'-6" SPACING)

NESTED LONG SPAN STRONG POST
W-BEAM GUARDRAIL OVER 12'-6" CULVERT
(MAXIMUM DYNAMIC DEFLECTION OF 3.1 FT.)

*Note: All nested W-Beam splices points shall be staggered.

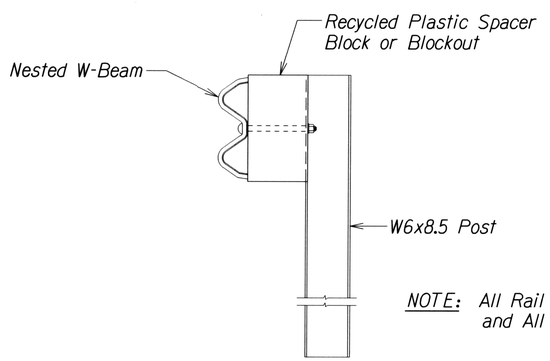

SECTION A-A

NOTE: All Rail Elements Sections are 12'-6" and All Posts are 6' Long

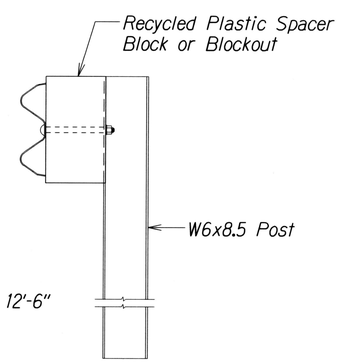

SECTION B-B

ORIGINAL PLAN	SURVEY PLOTTED BY	DATE
	DRAWN BY	
	TRACED BY	
NOTE BOOK	DESIGNED BY	
	QUANTITIES BY	
N.	CHECKED BY	

4/22/04 15:17:09 /pwd/dfbil/rs16x2beamsp.dgn

STATE OF HAWAII
DEPARTMENT OF TRANSPORTATION
HIGHWAYS DIVISION

NESTED LONG SPAN STRONG POST
W-BEAM GUARDRAIL OVER CULVERT
INTERSTATE ROUTE H-2 and MOANALUA FREEWAY
Guardrail and Shoulder Improvements
Federal Aid Project No. IM-STP-0300(106)

Scale: NTS Date: April, 2017

SHEET No. 8 OF 12 SHEETS

FED. ROAD DIST. NO.	STATE	FED. AID PROJ. NO.	FISCAL YEAR	SHEET NO.	TOTAL SHEETS
HAWAII	HAW.	IM-STP-0300(106)	2017	22	193

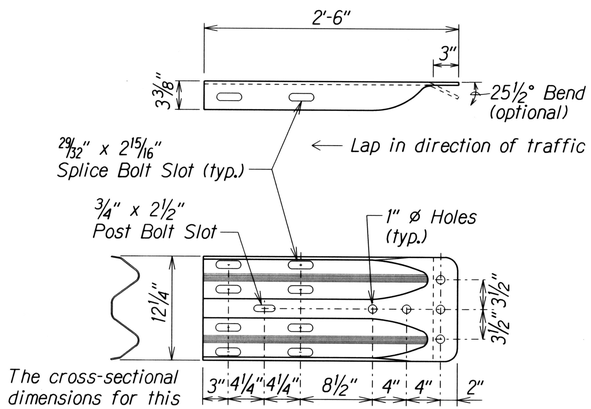

The cross-sectional dimensions for this part are to fit over part RWM02a on the approach end and under part RWM02a on the trailing end.

DESIGNATOR	BASE METAL THICKNESS
RWE02b	10 Gauge

W-BEAM TERMINAL CONNECTOR (RWE02b)

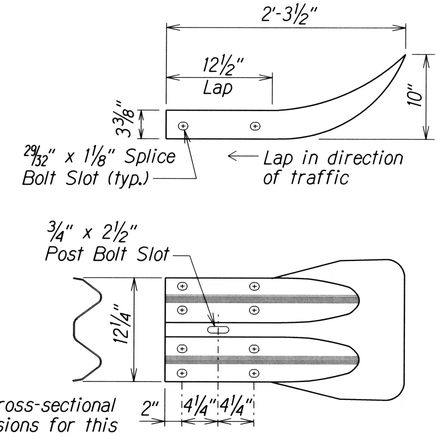

The cross-sectional dimensions for this part are to fit over part RWM02a on the approach end and under part RWM02a on the trailing end.

DESIGNATOR	BASE METAL THICKNESS
RWE01a	12 Gauge

W-BEAM END SECTION (FLARED RWE01a)

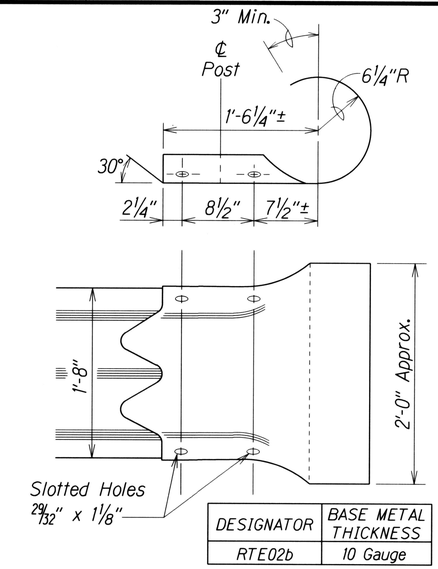

DESIGNATOR	BASE METAL THICKNESS
RTE02b	10 Gauge

THRIE-BEAM SECTION (ROUNDED) (RTE02b)

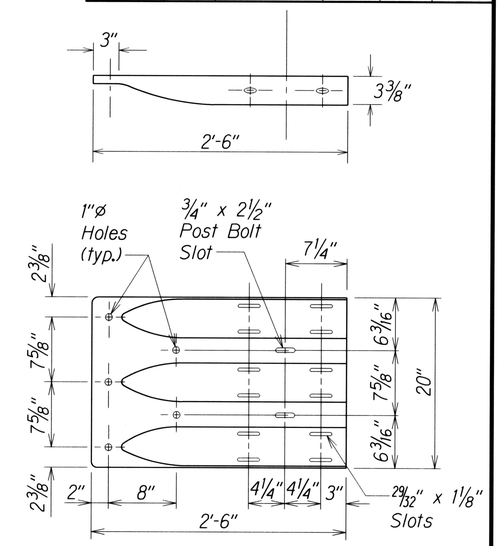

DESIGNATOR	BASE METAL THICKNESS
RTE01b	10 Gauge

THRIE-BEAM TERMINAL CONNECTOR (RTE01b)

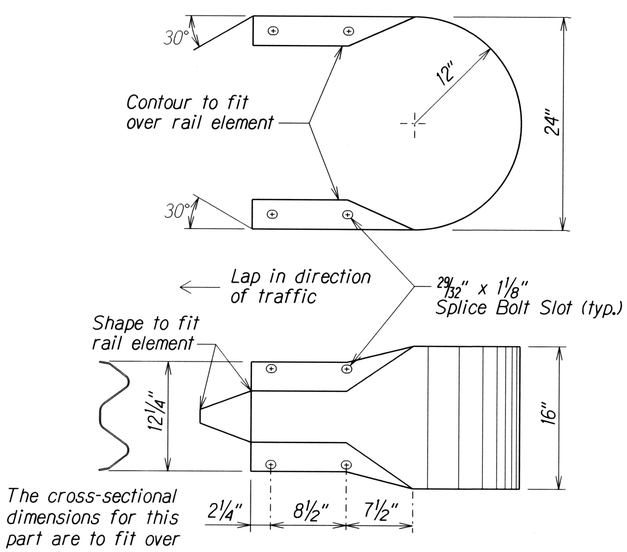

The cross-sectional dimensions for this part are to fit over part RWM02a

DESIGNATOR	BASE METAL THICKNESS
RWE06a	12 Gauge

W-BEAM END SECTION (BUFFER RWE06a)

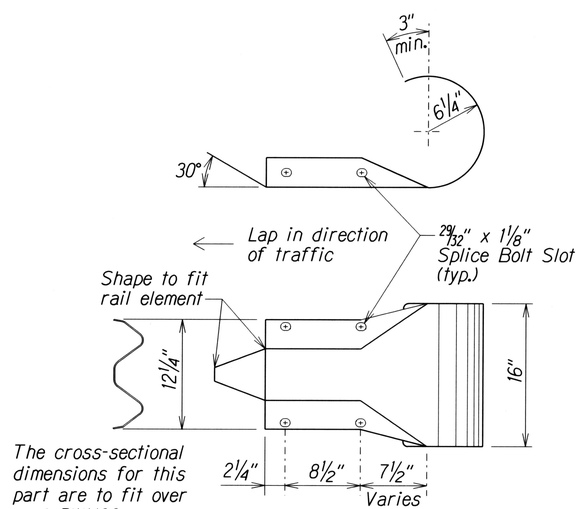

The cross-sectional dimensions for this part are to fit over part RWM02a

DESIGNATOR	BASE METAL THICKNESS
RWE03a	12 Gauge

W-BEAM END SECTION (ROUNDED RWE03a)

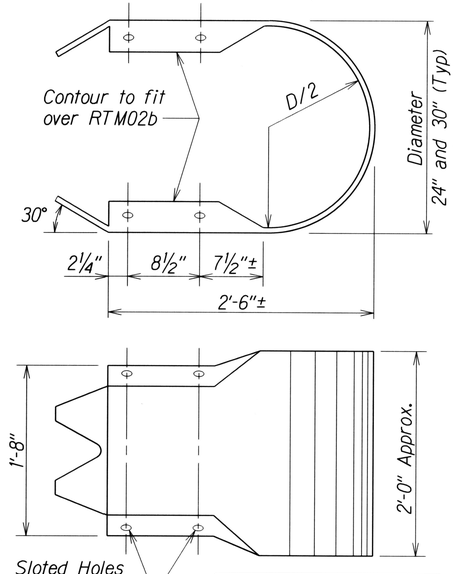

DESIGNATOR	BASE METAL THICKNESS
RTE03b & RTE04b	10 Gauge

THRIE-BEAM END SECTION (BUFFER RTE03b or RTE04b)

STATE OF HAWAII
DEPARTMENT OF TRANSPORTATION
HIGHWAYS DIVISION

GUARDRAIL TERMINAL CONNECTORS AND END SECTIONS

INTERSTATE ROUTE H-2 and MOANALUA FREEWAY
Guardrail and Shoulder Improvements
Federal Aid Project No. IM-STP-0300(106)

Scale: NTS Date: April, 2017

SHEET No. 9 OF 12 SHEETS

ORIGINAL PLAN	SURVEY PLOTTED BY	DATE
	DRAWN BY	
	TRACED BY	
NOTE BOOK	DESIGNED BY	
	QUANTITIES BY	
No.	CHECKED BY	

f6/21/01 tdl:/uby/guardrail/te51rw.dgn (standard plan TE-51 (09/01/87))

FED. ROAD DIST. NO.	STATE	FED. AID PROJ. NO.	FISCAL YEAR	SHEET NO.	TOTAL SHEETS
HAWAII	HAW.	IM-STP-0300(106)	2017	23	193

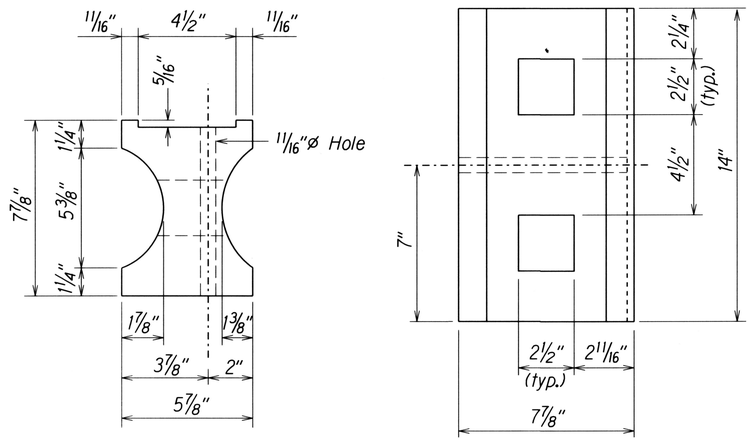

TOP

SIDE

RECYCLED PLASTIC BLOCKOUT (TYPE I)

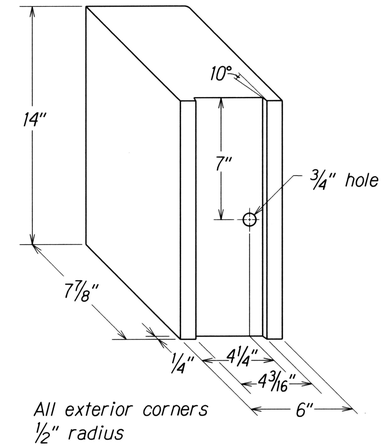

RECYCLED POLYETHYLENE OFFSET BLOCK (TYPE II)

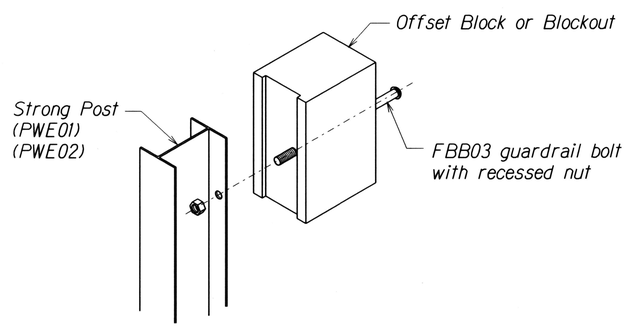

Exploded View
(Rail and washer not shown)

STEEL POST AND BLOCK DETAIL

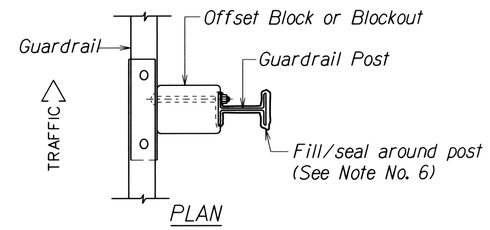

PLAN

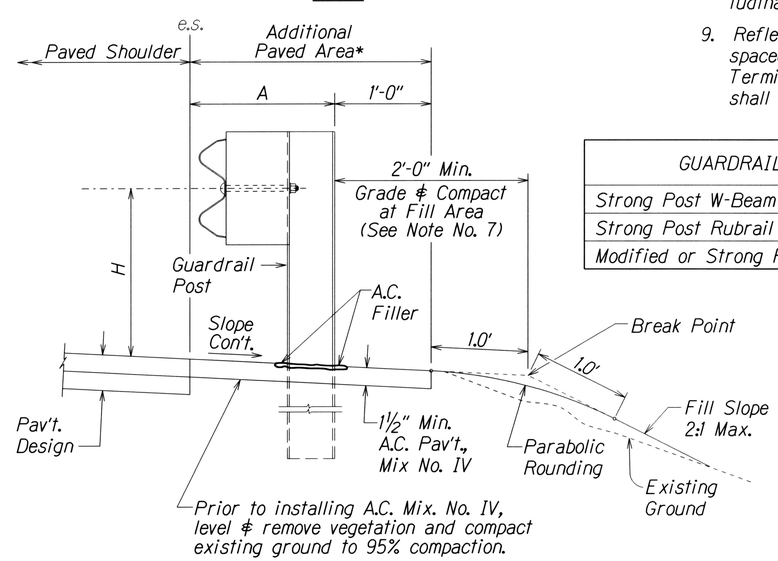

ELEVATION

TYPICAL GUARDRAIL INSTALLATION

GENERAL NOTES

1. All hardware, posts and fasteners shall be hot-dip zinc coated galvanized after fabrication. No punching, drilling or cutting will be permitted after galvanizing.
2. Where conditions require, special post lengths in increments of 6 inches may be specified.
3. All fasteners, posts, and rail elements (i.e. FBB03, PWE01, RWM02b, etc.) shall conform to the latest edition and amendments of "A Guide to Standardized Highway Barrier Rail Hardware", a report prepared and approved by the AASHTO-AGC-ARTBA Joint Cooperative Committee, Subcommittee On New Highway Materials, Task Force 13 Report. Dimensions of fastners, posts and rail elements have been converted from metric units into their present form.
4. The Recycled Plastic Block or Offset Block shall be approved by the State.
5. All new guardrail systems (system consists of total length of guardrail including both end treatments) shall include the Additional Paved Area.
6. After the guardrail posts are installed in the paved area, the Contractor shall fill/seal around each guardrail post and all cracks in the paved area caused during the guardrail post installation. If required by the inspector/engineer, the Contractor shall tamper the paved area around the guardrail post prior to filling/sealing. All costs associated with this work shall not be paid for separately, but shall be considered incidental to the various guardrail items.
7. When standards for the fill slope area cannot be met, a site specific, engineer approved design may be used.
8. New A.C. pavement at guardrails shall extend 6 feet longitudinally beyond terminal ends.
9. Reflector Markers (RM-5) mounted on guardrails shall be spaced every 25 feet. RM-5's shall not be installed on Terminal Sections. Furnishing and installing of each RM-5 shall be considered incidental to the adjacent guardrail system.

GUARDRAIL TYPE	DIMENSION	
	H	A
Strong Post W-Beam	1'-9 5/8"	1'-6"
Strong Post Rubrail (W-Beam)	2'-0"	1'-6"
Modified or Strong Post Thrie Beam	2'-0"	2'-0"

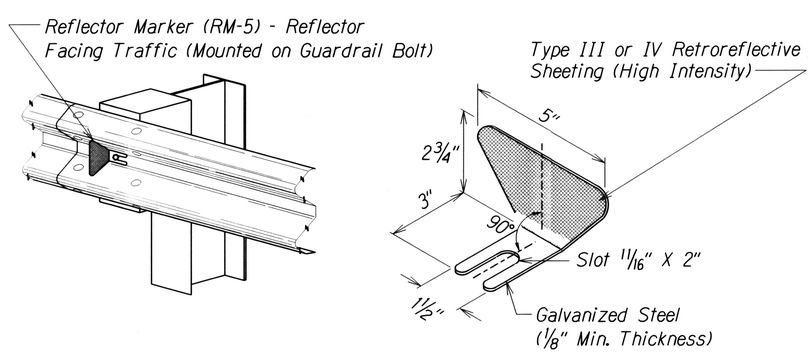

REFLECTOR MARKER (RM-5) DETAIL AND TYPICAL INSTALLATION

ORIGINAL PLAN	SURVEY PLOTTED BY	DATE
	DRAWN BY	
	TRACED BY	
NOTE BOOK	DESIGNED BY	
	QUANTITIES BY	
No.	CHECKED BY	

12/28/02 td:/uby/guardrail/te50rev.dgn (standard plan TE-50 :09/01/00)

STATE OF HAWAII
DEPARTMENT OF TRANSPORTATION
HIGHWAYS DIVISION

GUARDRAIL DETAILS & NOTES

INTERSTATE ROUTE H-2 and MOANALUA FREEWAY
Guardrail and Shoulder Improvements
Federal Aid Project No. IM-STP-0300(106)

Scale: NTS Date: April, 2017

SHEET No. 10 OF 12 SHEETS

FED. ROAD DIST. NO.	STATE	FED. AID PROJ. NO.	FISCAL YEAR	SHEET NO.	TOTAL SHEETS
HAWAII	HAW.	IM-STP-0300(106)	2017	24	193

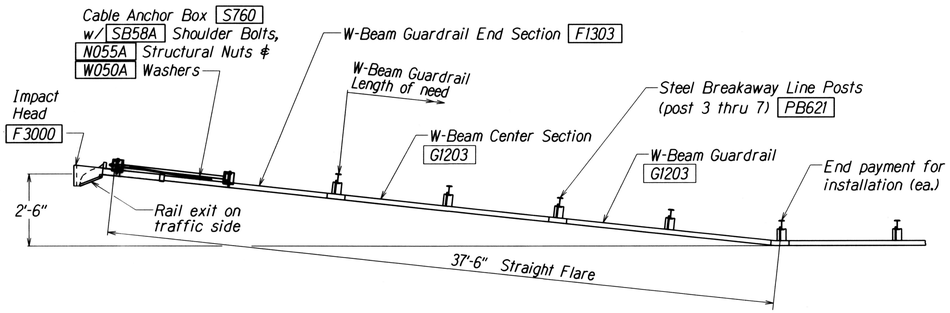

PLAN

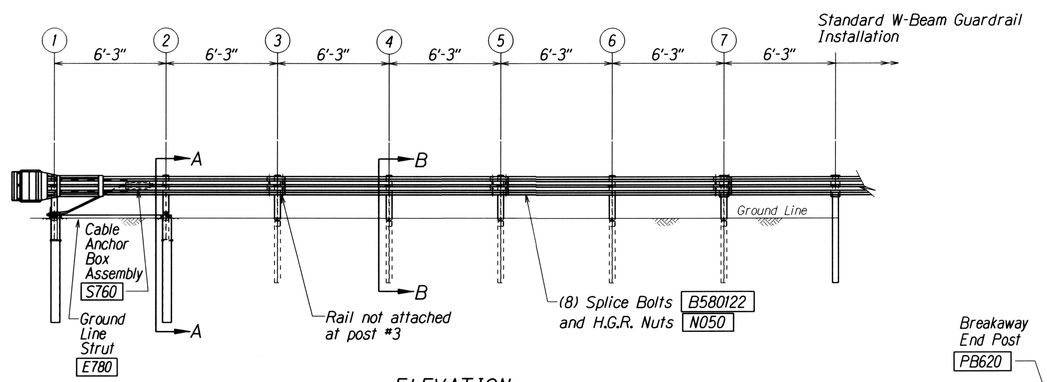

ELEVATION

GENERAL NOTES

1. Breakaway steel posts are required with the FLEAT Terminal.
2. All bolts, nuts, cable assemblies, cable anchors and bearing plates shall be galvanized.
3. The soil tubes shall not protrude more than 4" above ground (measured along a 5' cord). Site grading may be necessary to meet this requirement.
4. The soil tubes may be driven with an approved driving head. Soil tubes shall not be driven with the post in the tube. If the tubes are placed in drilled holes, the backfill material must be satisfactorily compacted to prevent settlement.
5. When rock is encountered during excavation, a 12" Dia. post hole, 20" deep may be used if approved by the engineer. Granular material will be placed in the bottom of the hole approx. 2 ½" deep to provide drainage. The soil tubes will be field cut to length, placed in the hole and backfilled with adequately compacted material excavated from the hole.
6. The breakaway cable assembly must be taut. A locking device, (vice grips or channel lock pliers) should be used to prevent the cable from twisting when tightening nuts.
7. (R) or (L) indicates right or left Impact Head Reflector Marker (IHRM). Providing and installing of IHRM shall be considered incidental to end treatment.
8. The stripes for IHRM shall slope downward at an angle of 45° towards the side of the end treatment that traffic is to pass.

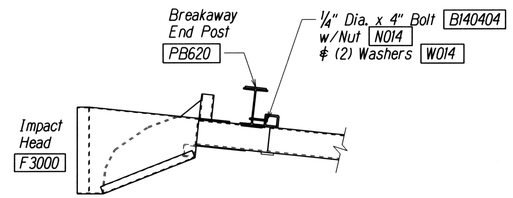

IMPACT HEAD CONNECTING DETAIL

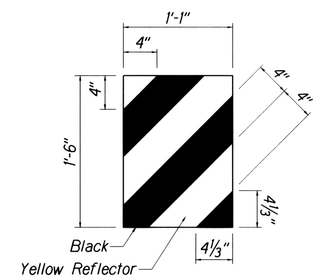

IHRM(R)
IMPACT HEAD REFLECTOR MARKER INSERT DETAIL

ITEM NO.	QTY.	BILL OF MATERIALS
F3000	1	IMPACT HEAD
F1303	1	W-BEAM GUARDRAIL END SECTION, 12 GA.
G1203	2	W-BEAM GUARDRAIL, 12 GA.
S730	2	*FOUNDATION SOIL TUBE, 6" x 8" x 72"
E750	1	BEARING PLATE
S760	1	CABLE ANCHOR BOX
E770	1	BCT CABLE ANCHOR ASSEMBLY
E780	1	GROUND STRUT
PB620	2	STEEL BREAKAWAY END POST
PB621	5	STEEL BREAKAWAY LINE POST
	5	RECYCLED PLASTIC BLOCKOUT OR OFFSET BLOCK
	1	IMPACT HEAD REFLECTOR MARKER - IHRM(R) OR (L)
		HARDWARE
B580122	25	⅝" Dia. x 1¼" SPLICE BOLT, POST #2
B580754	2	⅝" Dia. x 7½" HEX BOLT
B341004	2	¾" Dia. x 10" HEX BOLT
B581002	5	⅝" Dia. x 10" H.G.R. BOLT (POST 3 THRU 7)
N050	32	⅝" Dia. H.G.R. NUT (SPLICE 24, SOIL TUBES 2, POST 2 THRU 7, 6)
N030	2	¾" Dia. HEX NUT
W050	6	H.G.R. WASHER
W030	4	¾" ID WASHER
N100	2	1" ANCHOR CABLE HEX NUT
W100	2	1" ANCHOR CABLE WASHER
B140404	2	¼" x 4" HEX BOLT
N014	2	¼" HEX NUT
W014	4	¼" WASHER
SB58A	8	CABLE ANCHOR BOX SHOULDER BOLT
N055A	8	½" A325 STRUCTURAL NUT
W050A	16	1 1/16" OD x 9/16" ID A325 STR. WASHER

Foundation Tube Options For Posts 1 & 2
*6'-0" Split Foundation Tubes S730
*6'-0" Solid Foundation Tubes E731
*5'-0" Foundation Tubes S735 W/Soil Plates SP600
*4'-6" Foundation Tubes E735 W/Soil Plates SP600

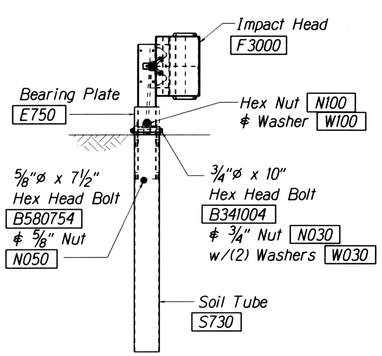

FRONT VIEW OF POST 1

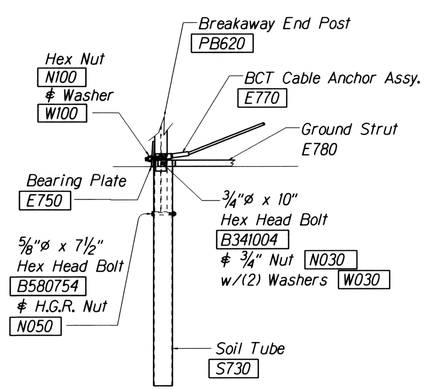

PARTIAL VIEW OF POST 1

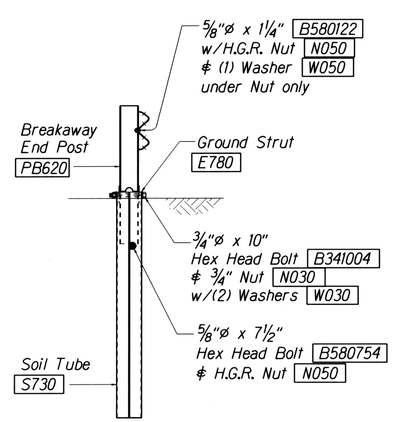

SECTION A-A
at Post #2

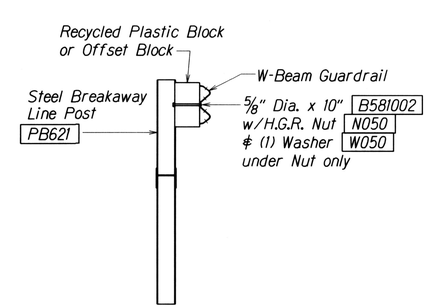

SECTION B-B
(Typical @ Post 3 - 7)
NOTE: RAIL NOT BOLTED @ POST #3

STATE OF HAWAII
DEPARTMENT OF TRANSPORTATION
HIGHWAYS DIVISION

FLEAT-350

FLARED ENERGY ABSORBING TERMINAL

INTERSTATE ROUTE H-2 and MOANALUA FREEWAY

Guardrail and Shoulder Improvements

Federal Aid Project No. IM-STP-0300(106)

Scale: NTS Date: April, 2017

SHEET No. 11 OF 12 SHEETS

ORIGINAL PLAN | SURVEY PLOTTED BY | DRAWN BY X | TRACED BY | DESIGNED BY X | QUANTITIES BY | CHECKED BY | DATE | NOTE BOOK | No.

r8/12/02 tdlruby/guardrail/fleat350.dgn (standard plan TE-61 r11/03/89 & TE-62 r09/01/87)

FED. ROAD DIST. NO.	STATE	FED. AID PROJ. NO.	FISCAL YEAR	SHEET NO.	TOTAL SHEETS
HAWAII	HAW.	IM-STP-0300(106)	2017	25	193

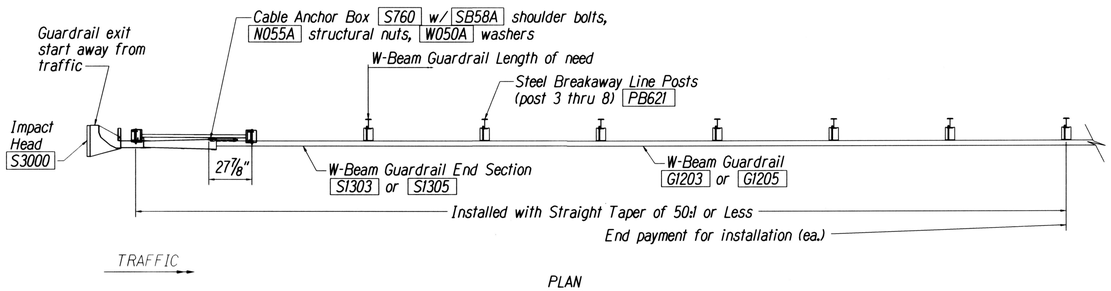

PLAN

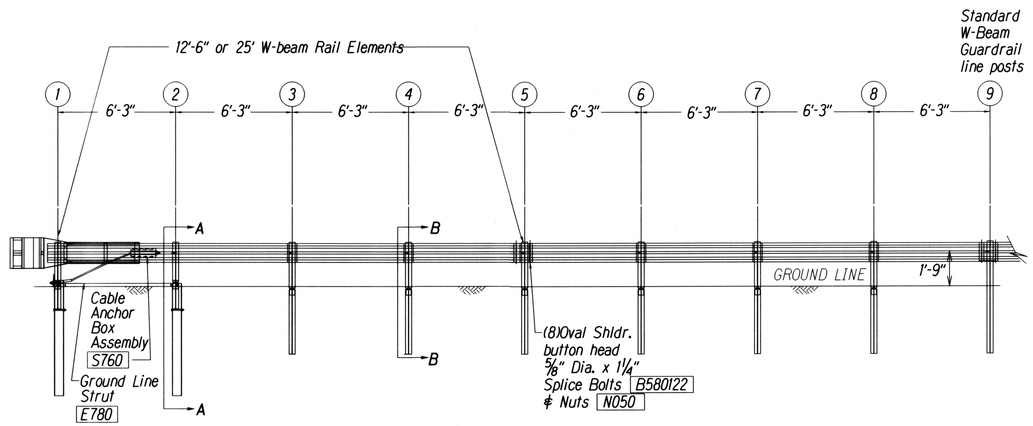

ELEVATION

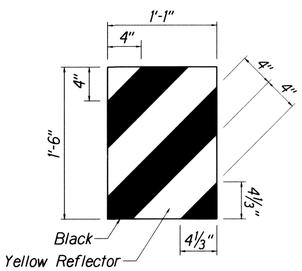

IHRM(R)
IMPACT HEAD REFLECTOR MARKER INSERT DETAIL

GENERAL NOTES:

1. Breakaway steel posts are required with the Sequential Kinking Terminal.
2. All bolts, nuts, cable assemblies, cable anchors and bearing plates shall be galvanized.
3. When the Sequential Kinking Terminal is selected as the end treatment for W-Beam Guardrail installation, the W-Beam Guardrail will be flared at a rate of 50:1 to prevent the impact head from encroaching on the shoulder. The flare is not required and may be decreased or eliminated for specific installations.
4. The soil tube shall not protrude more than 4" above ground (measured) along a 5' cord). Site grading may be necessary to meet this requirement.
5. The soil tubes may be driven with an approved driving head. They shall not be driven with the post in the tube. If the soil tubes are placed in drilled holes, the backfill material must be satisfactorily compacted to prevent settlement.
6. When rock is encountered during excavation, a 12" dia. post hole, 20" deep may be used if approved by the Engineer. Granular material will be placed in the bottom of the hole approx. 2 1/2" deep to provide drainage. The soil tubes will be field cut to length, placed in the hole and backfilled with adequately compacted material excavated from the hole.
7. The breakaway cable assembly must be taut. A locking device, (vice grips or channel lock pliers) should be used to prevent the cable from twisting when tightening nuts.
8. A special site evaluation should be considered prior to using the Sequential Kinking Terminal where there is less than 25' between the outlet side of the Sequential Kinking Terminal and any adjacent driving lane.
9. (R) or (L) indicates right or left Impact Head Reflector Marker (IHRM). Providing and installing of IHRM shall be considered incidental to end treatment.
10. The stripes for IHRM shall slope downward at an angle of 45° towards the side of the end treatment that traffic is to pass.

ITEM NO.	QTY.	BILL OF MATERIALS
S3000	1	IMPACT HEAD
S1303/S1305	1	W-BEAM GUARDRAIL END SECTION 12 GA. 12.5' or 25'
G1203/G1205	3/1	W-BEAM GUARDRAIL, 12 GA., 12.5' or 25'
S730	2	*FOUNDATION SOIL TUBE, 6" x 8" x 72"
E750	1	BEARING PLATE
S760	1	CABLE ANCHOR BOX
E770	1	BCT CABLE ANCHOR ASSEMBLY
E780	1	GROUND STRUT
PB620	2	STEEL BREAKAWAY END POSTS
PB621	6	STEEL BREAKAWAY LINE POSTS
	6	RECYCLED PLASTIC BLOCKOUTS OR OFFSET BLOCK
	1	IMPACT HEAD REFLECTOR MARKER - IHRM(R) OR (L)
		HARDWARE
B580122	17/33	5/8" Dia. x 1 1/4" SPLICE BOLTS, POST #2
B580754	2	5/8" Dia. x 7 1/2" HEX BOLTS
B341004	2	3/4" Dia. x 10" HEX BOLTS
B341002	6	5/8" Dia. x 10" H.G.R. BOLT (POST 2 ONLY)
B581802	6	5/8" Dia. x 18" H.G.R. BOLT (POST 3 THRU 8)
N050	26/42	5/8" Dia. H.G.R. NUT (SPLICE 17/33, SOIL TUBES 2, POST 2 THRU 8)
N030	2	3/4" Dia. HEX NUTS
W050	7	H.G.R. WASHER
W030	4	3/4" ID WASHER
N100	2	1" ANCHOR CABLE HEX NUT
W100	2	1" ANCHOR CABLE WASHER
B140404	2	1/4" x 4" HEX BOLT
N014	2	1/4" HEX NUT
W014	4	1/4" WASHER
SB58A	8	CABLE ANCHOR BOX SHOULDER BOLTS
N055A	8	1/2" A325 STRUCTURAL NUTS
W050A	16	1 1/16" OD x 9/16" ID A325 STR. WASHER

Foundation Tube Options For Posts 1 & 2
*6'-0" Split Foundation Tubes S730
*6'-0" Solid Foundation Tubes E731
*5'-0" Foundation Tubes S735 W/Soil Plates SP600
*4'-6" Foundation Tubes E735 W/Soil Plates SP600

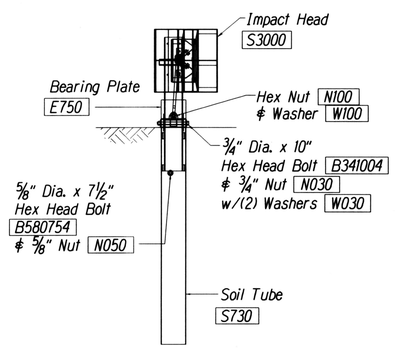

FRONT VIEW OF POST 1

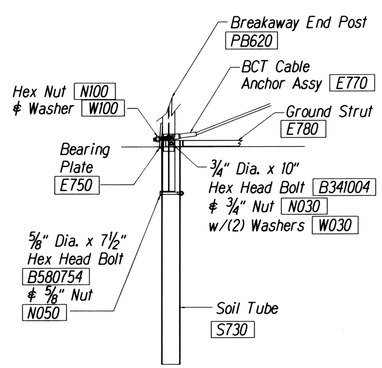

PARTIAL VIEW OF POST 1

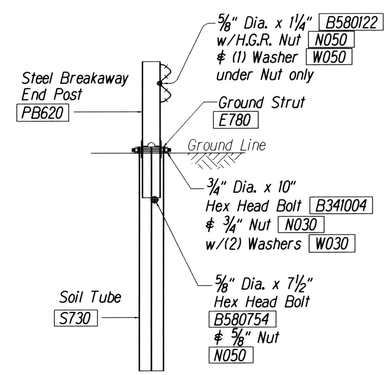

SECTION A-A
at Post #2

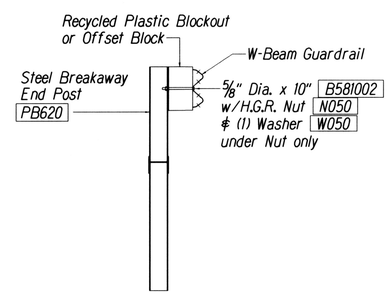

SECTION B-B
typical @ Post 3 thru 8

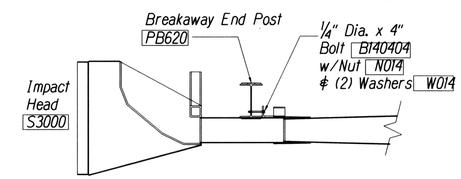

IMPACT HEAD CONNECTION DETAIL

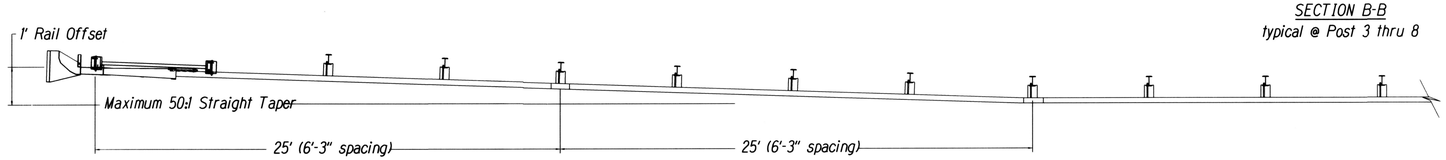

DETAIL A
50:1 flare rate

STATE OF HAWAII
DEPARTMENT OF TRANSPORTATION
HIGHWAYS DIVISION

SKT-350

SEQUENTIAL KINKING TERMINAL

INTERSTATE ROUTE H-2 and MOANALUA FREEWAY

Guardrail and Shoulder Improvements

Federal Aid Project No. IM-STP-0300(106)

Scale: NTS Date: April, 2017

SHEET No. 12 OF 12 SHEETS

ORIGINAL PLAN | SURVEY PLOTTED BY | DRAWN BY | TRACED BY | DESIGNED BY | QUANTITIES BY | CHECKED BY | DATE | NOTE BOOK | N.

3-28-01 td:rudy guardrail/sk1350.dgn (Stand Plan TE-61 rl1:03:09 & TE-62 r09:01:07)