| FED. ROAD DIST. NO. | STATE | FED. AID PROJ. NO. | FISCAL YEAR | SHEET NO. | TOTAL SHEETS |
|---|---|---|---|---|---|
| HAWAII | HAW. | I-H2-1(8)-6 | 1973 | 120 | 160 |

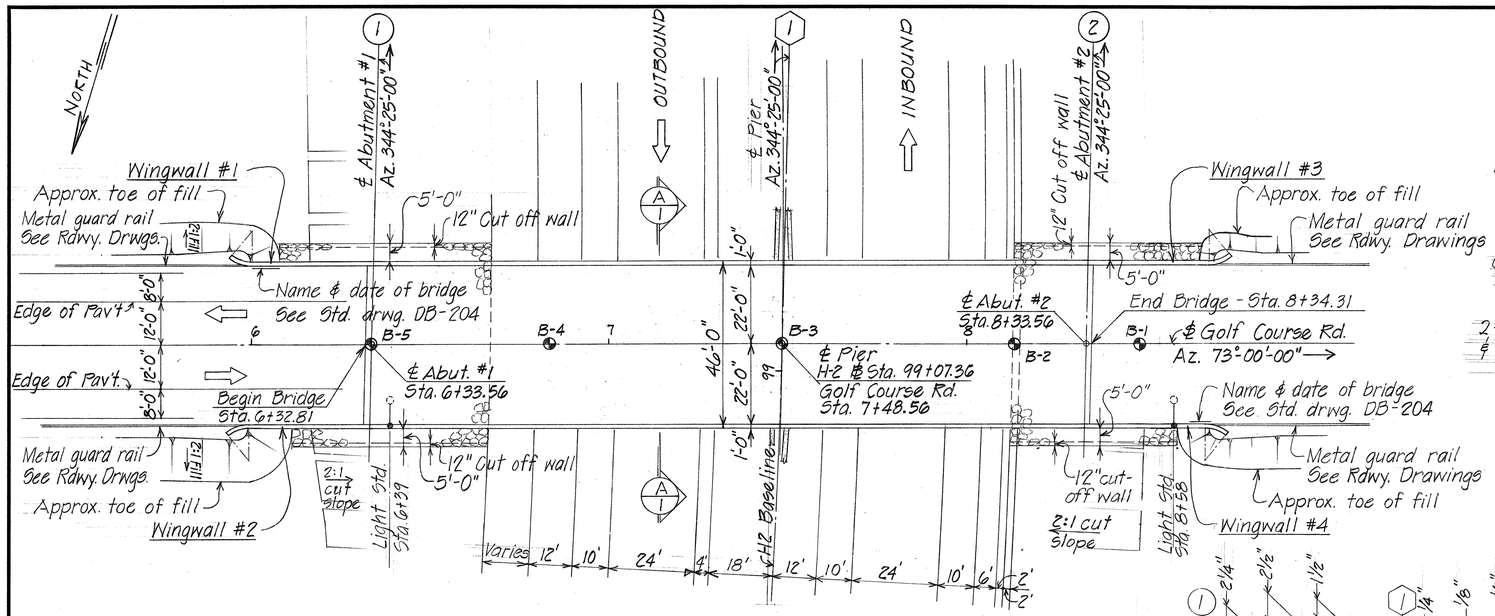


## LAYOUT PLAN

SCALE 1"=20'-0"

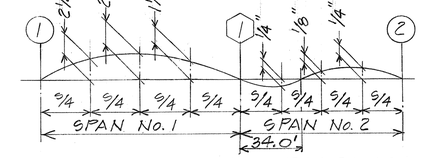


## SLAB CAMBER DIAGRAM

Not to Scale

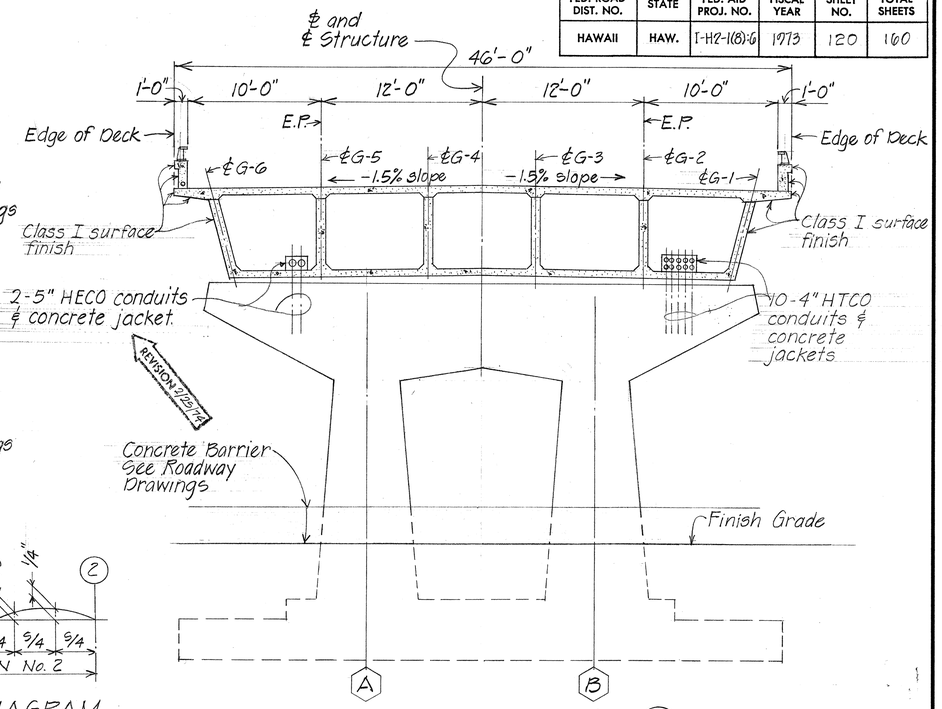


## NORMAL SECTION (A/1)

Scale: 3/16" = 1'-0"

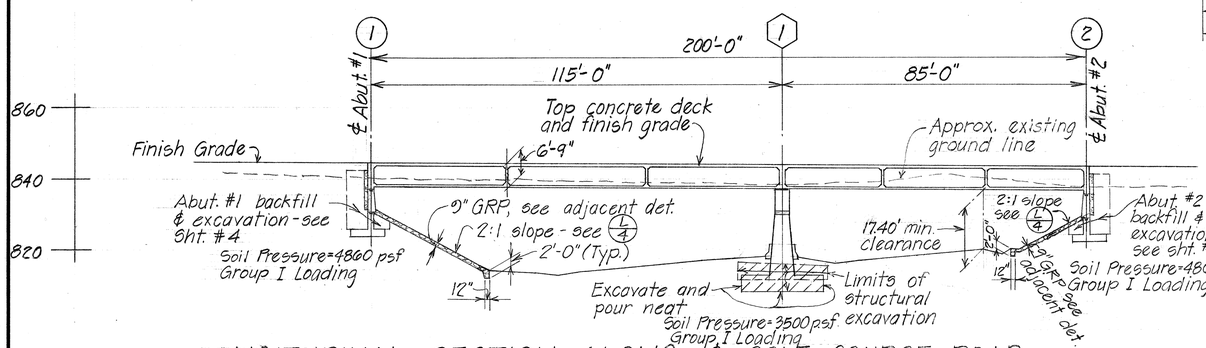


## LONGITUDINAL SECTION ALONG ℄ GOLF COURSE ROAD

Scale: 1"=20'-0"

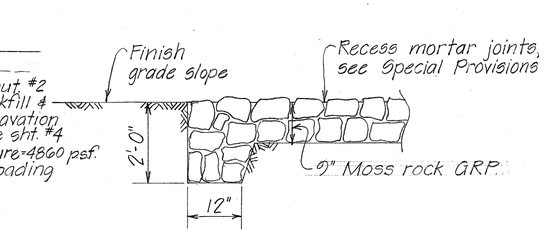


## (B/1) TYPICAL GRP CUT OFF WALL DETAIL

Scale: 3/4" = 1'-0"

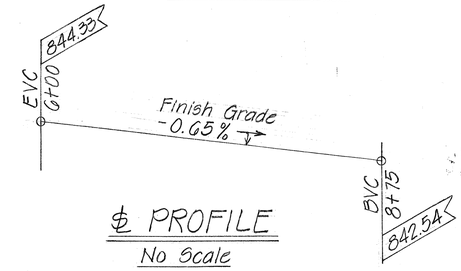


## ℄ PROFILE

No Scale

### REFERENCE NOTES

1. For Design and General Notes, refer to Sht. #5
2. For Logs of Borings, refer to Sht. #6

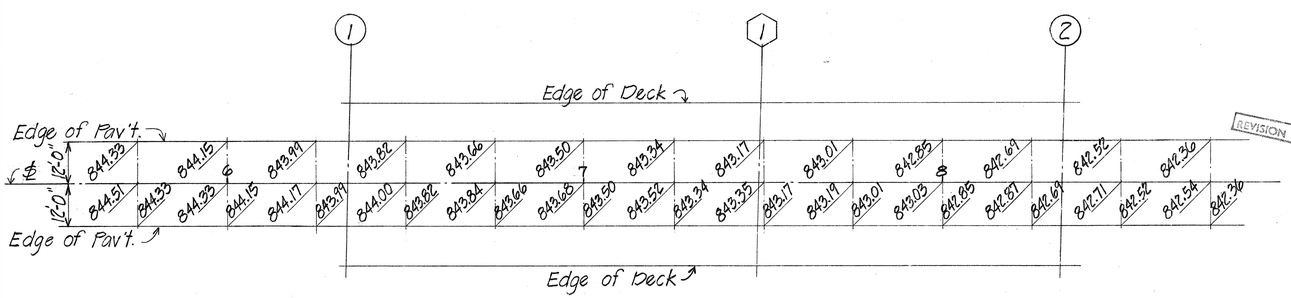


## FINISH GRADE PLAN

SCALE 1"=20'-0"

REVISION 2/25/74

### ESTIMATED QUANTITIES

| | | |
|---|---|---|
| Concrete - Footing (274.0 C.Y.) | Lump | Sum |
| Concrete - All Others (855.0 C.Y.) ~~(844.0 C.Y.)~~ | Lump | Sum |
| Reinforcing Steel (304,759 Lbs.) | Lump | Sum |
| Steel Bridge Railing (One Rail Tubular) | 527 | L.F. |
| Concrete Bridge Railing - Including End Posts | 564 | L.F. |
| Structure Excavation | 848 | C.Y. |
| Structure Backfill (Abutments & Wingwalls) | 600 | C.Y. |
| Filter Material | 62 | C.Y. |
| Moss Rock Grouted Rubble Paving (GRP) | 114 | C.Y. |

| Date | Revision |
|---|---|
| 2/25/74 | Add - 2 HECO conduits & conc. jacket between G-5 - G-6 |

STATE OF HAWAII
DEPARTMENT OF TRANSPORTATION
HIGHWAYS DIVISION

GOLF COURSE SEPARATION

STA. 6+32.81 TO STA. 8+34.31

LAYOUT PLAN AND DETAILS

Leilehua Interchange
F.A.I. Proj. No. I-H2-1(8)-6 January, 1973

SHEET No. 1 OF 20 SHEETS

| ORIGINAL PLAN | | DATE |
|---|---|---|
| | SURVEY PLOTTED BY | 2/73 |
| | DRAWN BY L.N. | " |
| | TRACED BY | 3/73 |
| NOTE BOOK | DESIGNED BY N.T. | " |
| | QUANTITIES BY G.T. | 3/73 |
| No. | CHECKED BY L.A. | " |

CO 393

| FED. ROAD DIST. NO. | STATE | FED. AID PROJ. NO. | FISCAL YEAR | SHEET NO. | TOTAL SHEETS |
|---|---|---|---|---|---|
| HAWAII | HAW. | I-H2-1(8):G | 1973 | 121 | 160 |

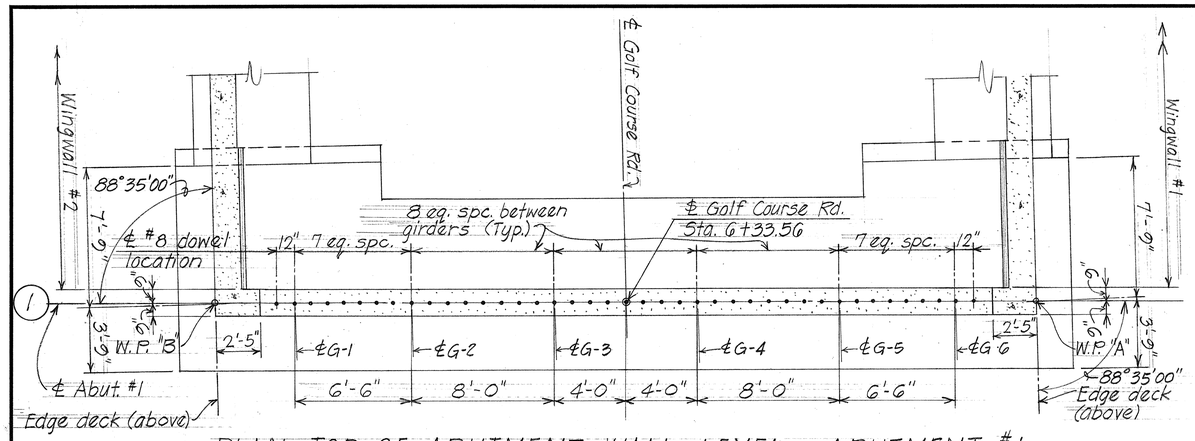


PLAN-TOP OF ABUTMENT WALL LEVEL - ABUTMENT #1

Scale: 1/4" = 1'-0"

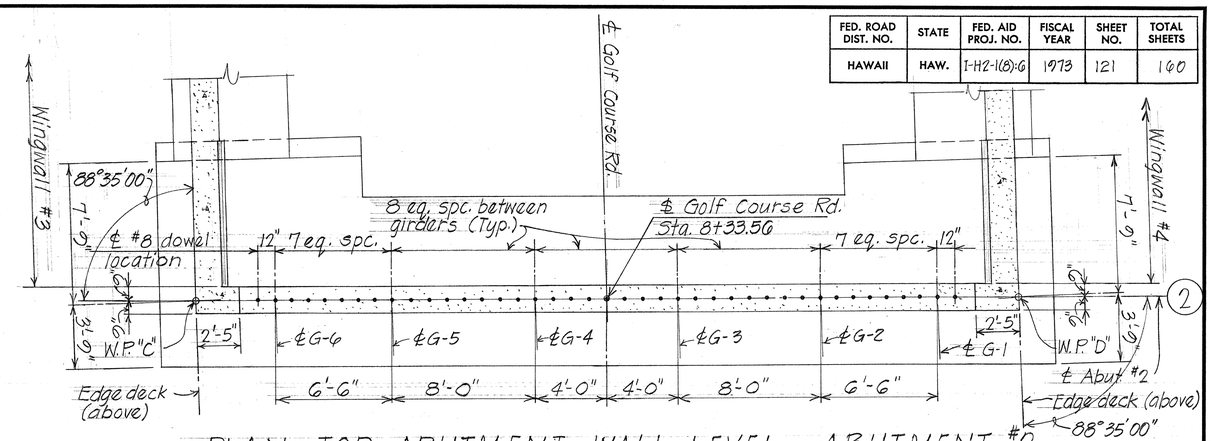


PLAN-TOP ABUTMENT WALL LEVEL - ABUTMENT #2

Scale: 1/4" = 1'-0"

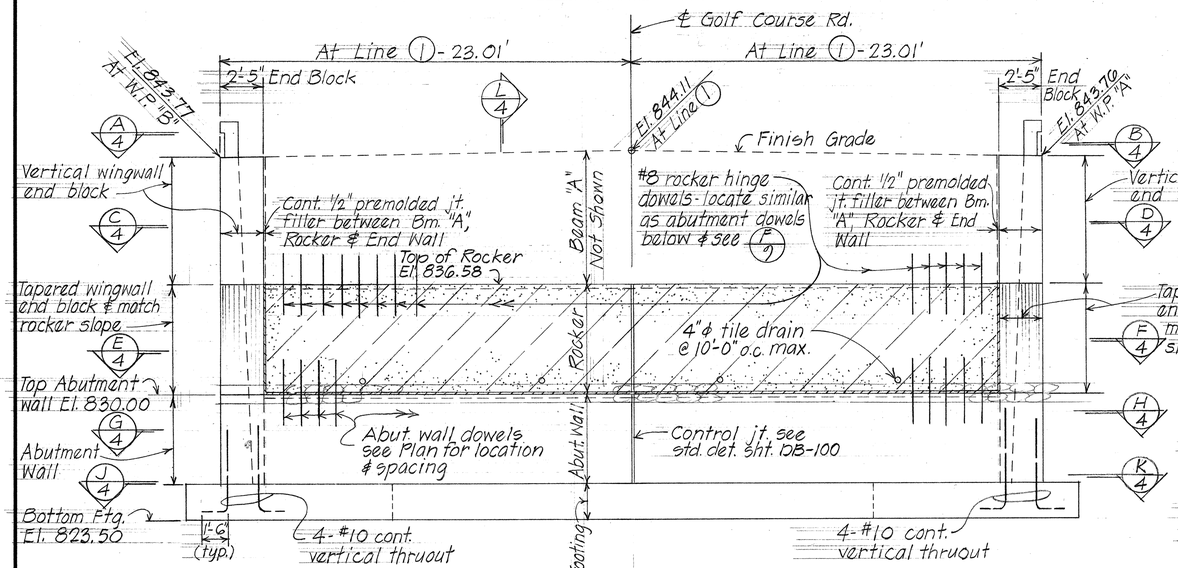


ELEVATION - ABUTMENT No. 1

Scale: 1/4" = 1'-0"

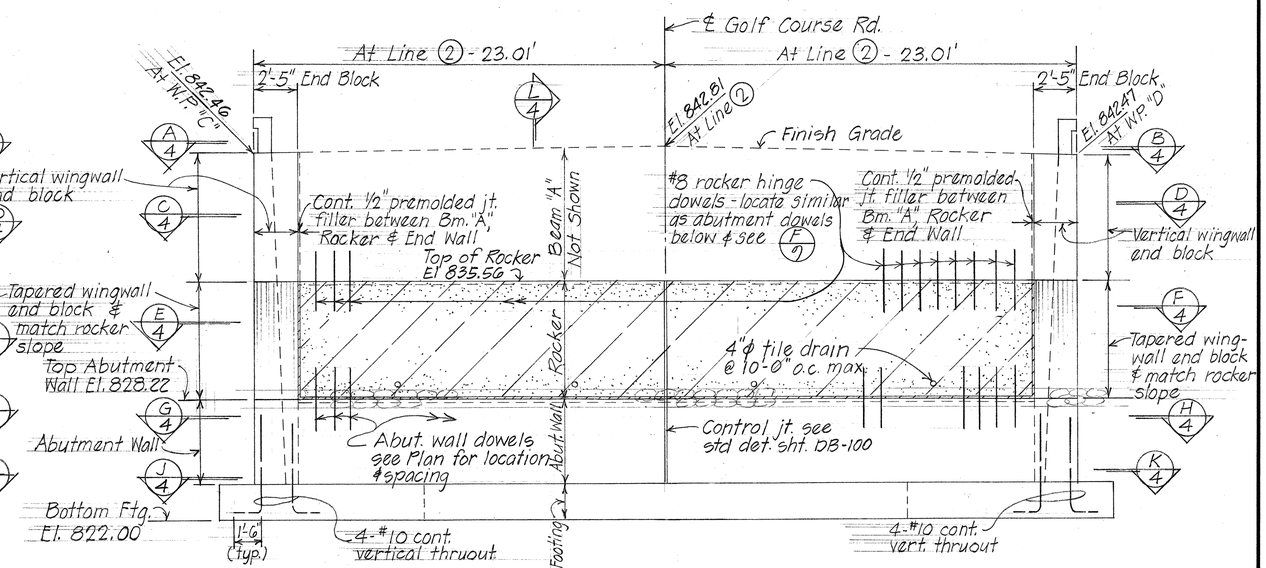


ELEVATION - ABUTMENT No. 2

Scale: 1/4" = 1'-0"

| ORIGINAL PLAN | | DATE |
|---|---|---|
| | SURVEY PLOTTED BY | |
| | DRAWN BY N.Y. | 3/73 |
| | TRACED BY " | " |
| | DESIGNED BY M.T. | 3/73 |
| NOTE BOOK | QUANTITIES BY N.T. P.G. J.M.A. | 3/73 |
| No. | CHECKED BY L.A. | 3/73 |

STATE OF HAWAII
DEPARTMENT OF TRANSPORTATION
HIGHWAYS DIVISION

GOLF COURSE SEPARATION

ABUTMENT #1 AND #2 DETAILS

Leilehua Interchange
F.A.I. Proj. No. I-H2-1(8):G January, 1973

SHEET No. 2 OF 20 SHEETS

| FED. ROAD DIST. NO. | STATE | FED. AID PROJ. NO. | FISCAL YEAR | SHEET NO. | TOTAL SHEETS |
|---|---|---|---|---|---|
| HAWAII | HAW. | I-H2-1(8):G | 1973 | 122 | 100 |

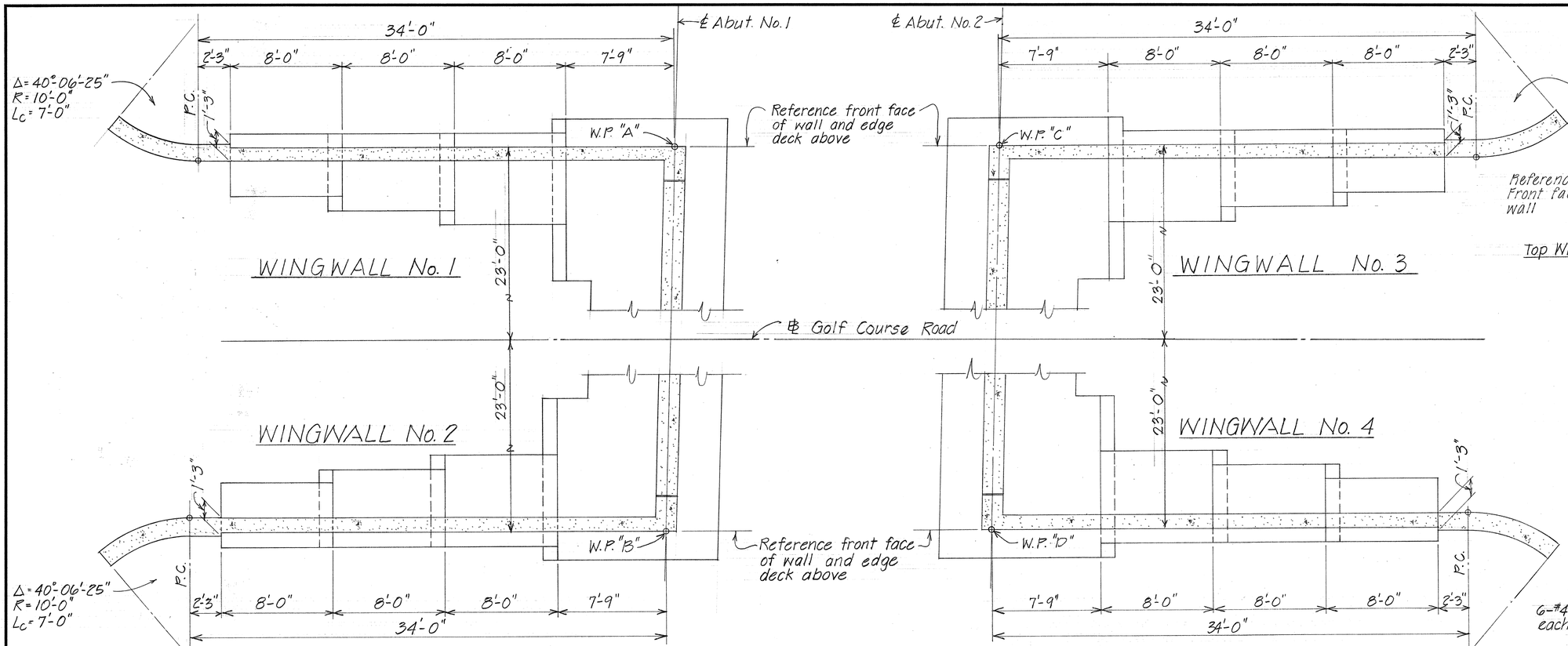


PART FOUNDATION PLAN - ABUTMENT WALL LEVEL

Scale: ¼" = 1'-0"

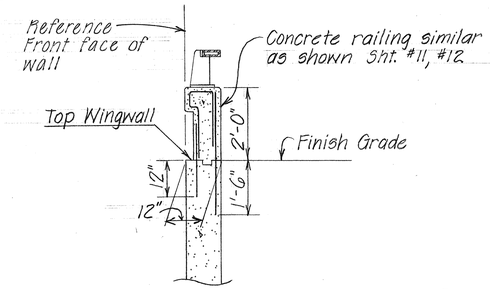


TYPICAL SECTION (A/3)

Scale: ½" = 1'-0"

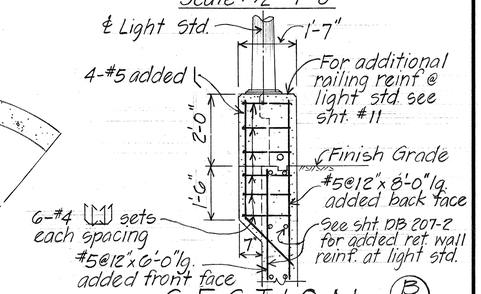


SECTION (B/3)

Scale: ½" = 1'-0"

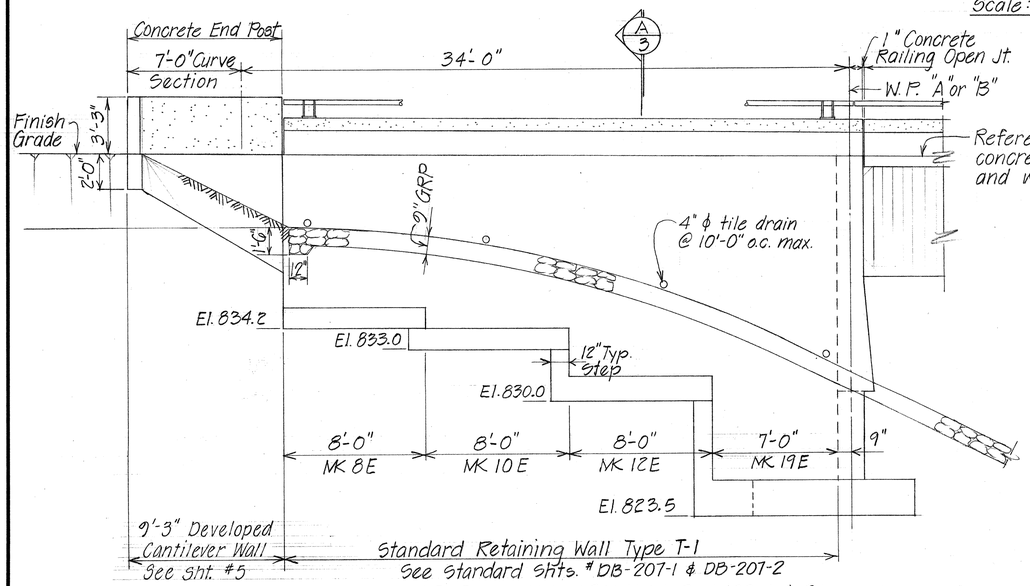


EXTERIOR ELEVATION - TYPICAL WINGWALLS Nos 1 & 2 Scale: ¼" = 1'-0"

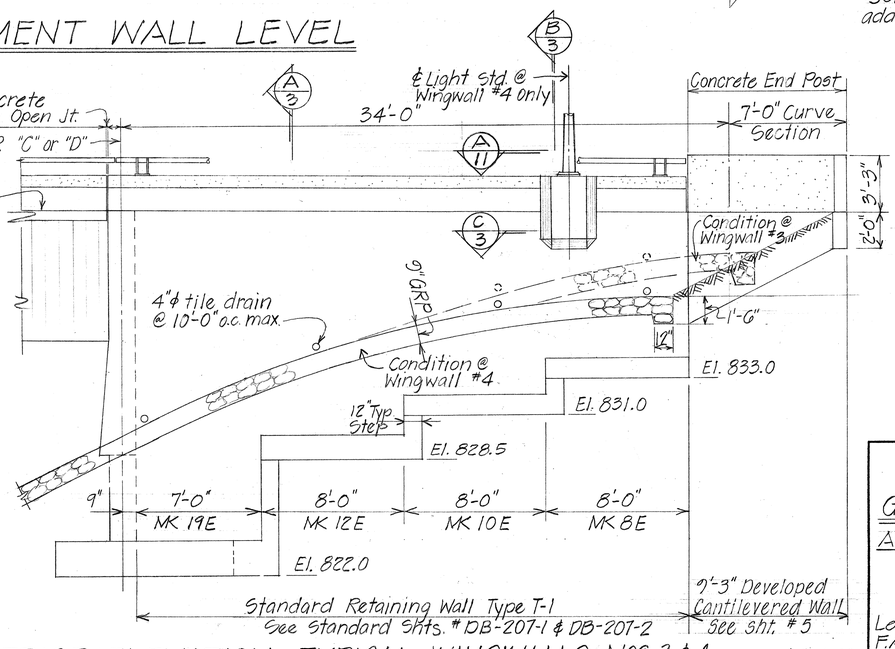


EXTERIOR ELEVATION - TYPICAL WINGWALLS Nos 3 & 4 Scale: ¼" = 1'-0"

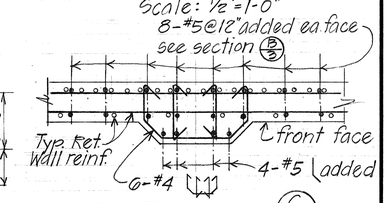


SECTION (C/3)

Scale: ½" = 1'-0"

| ORIGINAL PLAN | | DATE |
|---|---|---|
| | SURVEY PLOTTED BY | |
| | DRAWN BY P.G., L.N. | 3/73 |
| | TRACED BY " " | 3/73 |
| | DESIGNED BY N.Y., P.G., L.M.A. | 3/73 |
| NOTE BOOK | QUANTITIES BY " " | 3/73 |
| No. | CHECKED BY L.A. | 3/73 |

STATE OF HAWAII
DEPARTMENT OF TRANSPORTATION
HIGHWAYS DIVISION

GOLF COURSE SEPARATION

ABUTMENT WINGWALLS #1, #2, #3, AND #4 DETAILS

Leilehua Interchange
F.A.I. Proj. No. I-H2-1(8):G January, 1973

SHEET No. 3 OF 20 SHEETS

| FED. ROAD DIST. NO. | STATE | FED. AID PROJ. NO. | FISCAL YEAR | SHEET NO. | TOTAL SHEETS |
|---|---|---|---|---|---|
| HAWAII | HAW. | I-H2-1(8)-6 | 1973 | 123 | 160 |

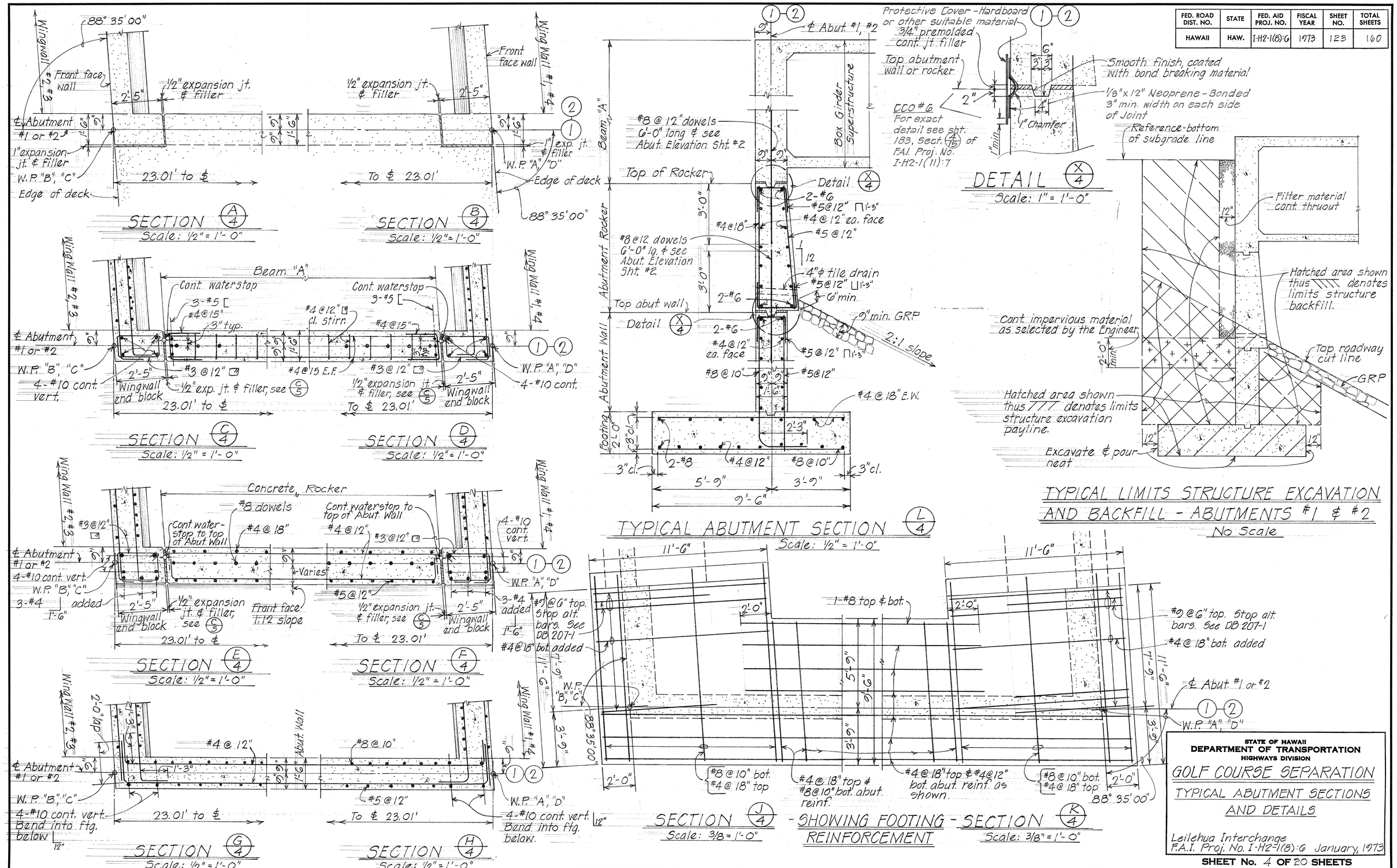


| ORIGINAL PLAN | | DATE |
|---|---|---|
| | SURVEY PLOTTED BY | |
| | DRAWN BY N.T. | 3/73 |
| | TRACED BY | |
| | DESIGNED BY N.T. | 2/73 |
| | QUANTITIES BY L.A. | 2/73 |
| | CHECKED BY L.A. | 4/73 |
| NOTE BOOK | | |
| No. | | |

STATE OF HAWAII
DEPARTMENT OF TRANSPORTATION
HIGHWAYS DIVISION

GOLF COURSE SEPARATION

TYPICAL ABUTMENT SECTIONS AND DETAILS

Leilehua Interchange
F.A.I. Proj. No. I-H2-1(8):6 January, 1973

SHEET No. 4 OF 20 SHEETS

| FED. ROAD DIST. NO. | STATE | FED. AID PROJ. NO. | FISCAL YEAR | SHEET NO. | TOTAL SHEETS |
|---|---|---|---|---|---|
| HAWAII | HAW. | I-H2-1(8):6 | 1973 | 124 | 160 |

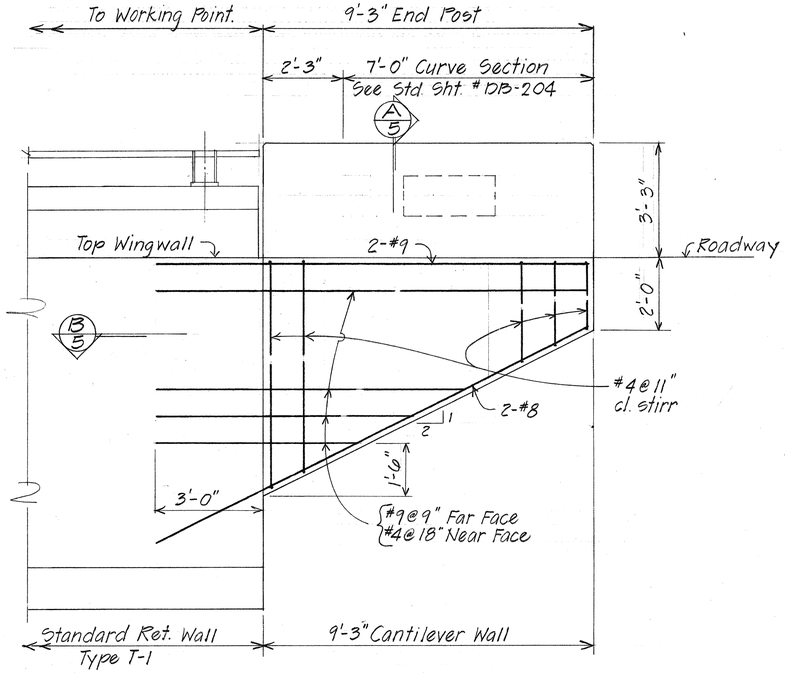


## TYPICAL CANTILEVER WINGWALL DETAIL AND REINFORCEMENT-(DEVELOPED)

Scale: 1/2" = 1'-0"

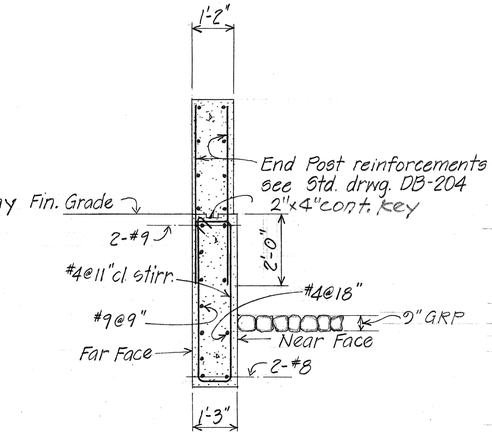


## SECTION A/5

Scale: 1/2" = 1'-0"

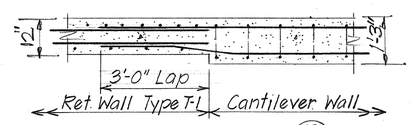


## SECTION B/5

Scale: 1/2" = 1'-0"

## GENERAL NOTES

SPECIFICATIONS: AASHO

Standard Specifications for Highway Bridges (10th Edition) with subsequent additions and modifications.

DESIGN LOADS: HS 20-44

DESIGN STRESSES:

| Class A | Class E |
|---|---|
| f'c = 3,000 psi | f'c = 4,500 psi |
| fc = 1,200 psi | fc = 1,800 psi |
| n = 10 | n = 8 |
| fs = 20,000 psi tension | |

MATERIALS:

1. All concrete shall be Class A unless otherwise noted on plans.
2. All welding shall conform to the current Specifications for Welded Highway and Railway Bridges of the American Welding Society.

CONSTRUCTION METHODS:

1. Splices for top & bottom slab main reinforcing shall be located near midspan for top slab and near pier support for bottom slab. All splices shall be staggered.
2. Sides of footings shall be excavated and poured to neat lines.
3. Abutments shall be braced until backfilling is completed. Backfilling shall be done after the superstructure girders and beams are completed. Backfill for abutments 1 and 2 shall be brought up simultaneously to prevent unbalanced earth pressures on the bridge. Check abutments for plumbness before constructing superstructure.
5. In general, top of concrete deck of structure shall be constructed to follow the finish roadway vertical and horizontal curves and grades.

CAMBER:

Obtain camber by forming and shoring concrete surfaces above profile grades amount shown in camber diagram and as indicated on detailed drawings.

REFERENCE:

1. Refer to Standard Detailed drawings for details not covered by these drawings.
2. Typical Detail of Combination Steel Railing on concrete parapet shts. #11, #12 refer to the entire bridge in general, except for modifications as may be required with special conditions. For such modifications, refer to detailed plans.

GENERAL:

1. All items noted incidental will not be paid for seperately.

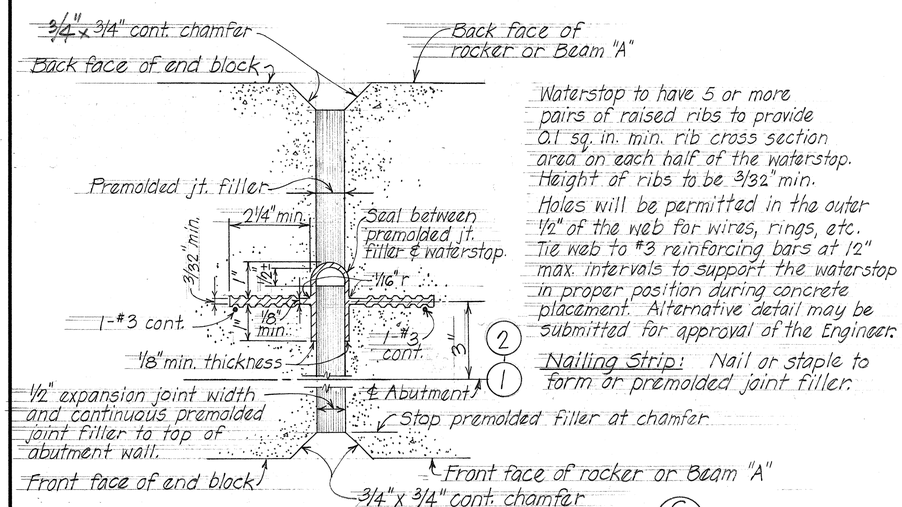


Waterstop to have 5 or more pairs of raised ribs to provide 0.1 sq. in. min. rib cross section area on each half of the waterstop. Height of ribs to be 3/32" min.

Holes will be permitted in the outer 1/2" of the web for wires, rings, etc. Tie web to #3 reinforcing bars at 12" max. intervals to support the waterstop in proper position during concrete placement. Alternative detail may be submitted for approval of the Engineer.

Nailing Strip: Nail or staple to form or premolded joint filler.

## TYPICAL EXPANSION JOINT DETAIL C/5

| ORIGINAL PLAN | SURVEY PLOTTED BY | DATE |
|---|---|---|
| | DRAWN BY N.J.B.G. | 3/73 |
| | TRACED BY " | " |
| NOTE BOOK | DESIGNED BY M.T. | 3/73 |
| | QUANTITIES BY N.J.B.G. | 3/73 |
| No. | CHECKED BY L.A. | 3/73 |

STATE OF HAWAII
DEPARTMENT OF TRANSPORTATION
HIGHWAYS DIVISION

GOLF COURSE SEPARATION

TYPICAL ABUTMENT SECTIONS AND DETAILS - GENERAL NOTES

Leilehua Interchange
F.A.I. Proj. No. I-H2-1(8):6 January, 1973

SHEET No. 5 OF 20 SHEETS

| FED. ROAD DIST. NO. | STATE | FED. AID PROJ. NO. | FISCAL YEAR | SHEET NO. | TOTAL SHEETS |
|---|---|---|---|---|---|
| HAWAII | HAW. | I-H2-1(8)-G | 1973 | 125 | 160 |

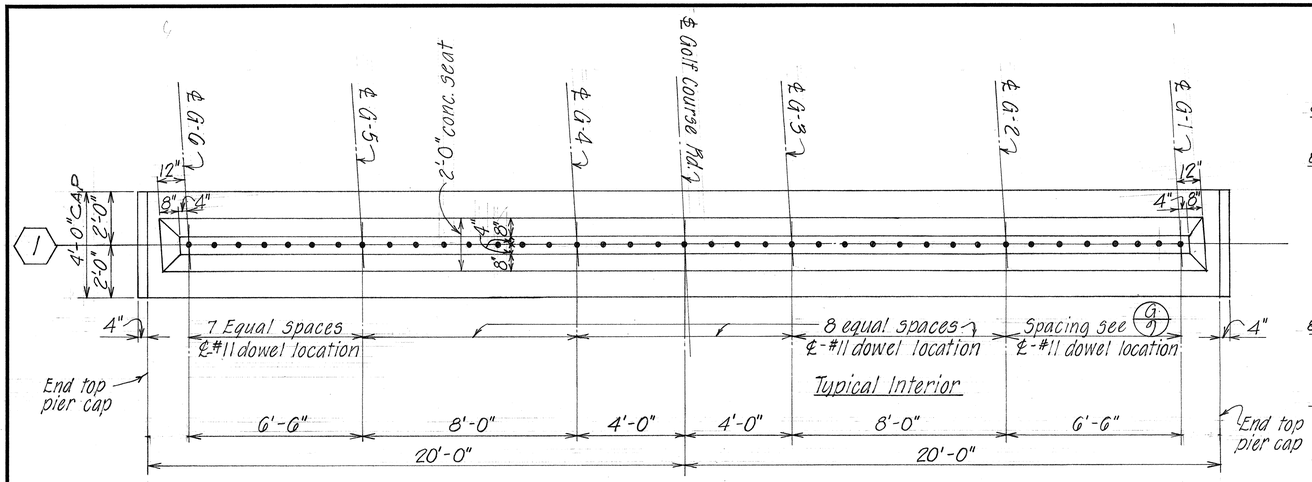


## PLAN - PIER CAP

Scale: 3/8" = 1'-0"

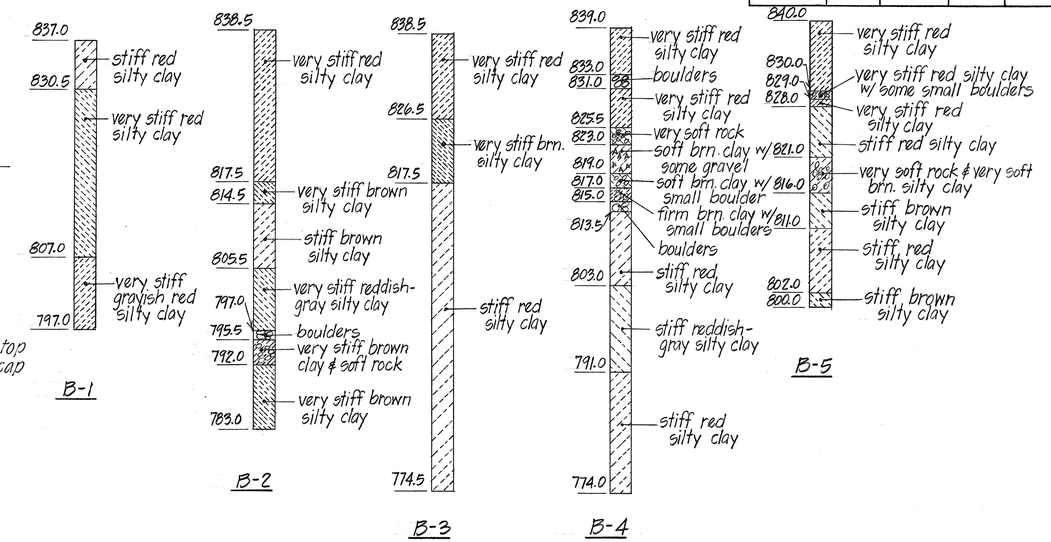


## BORING LOG FOR GOLF COURSE INTERCHANGE

SCALE 1" = 10'-0"

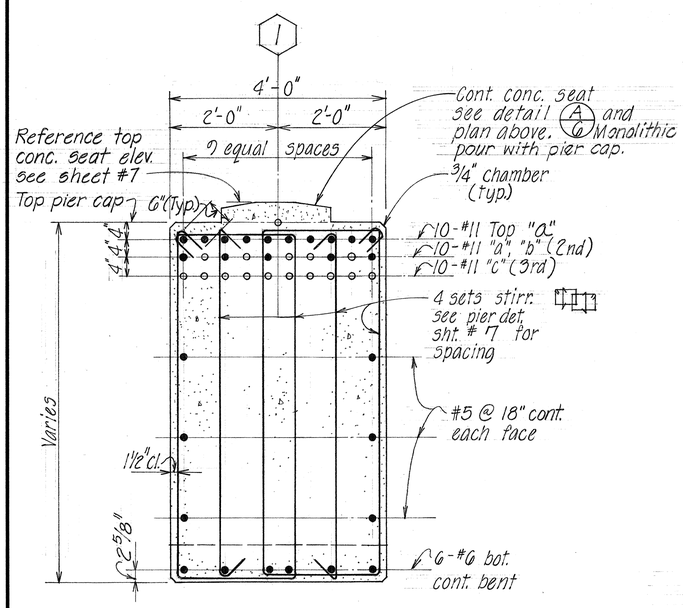


## TYPICAL SECTION (C/6)

Scale: 3/4" = 1'-0"

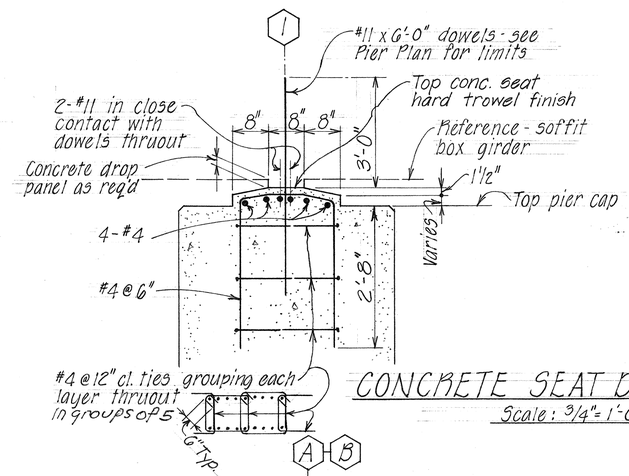


## CONCRETE SEAT DETAIL (A/6)

Scale: 3/4" = 1'-0"

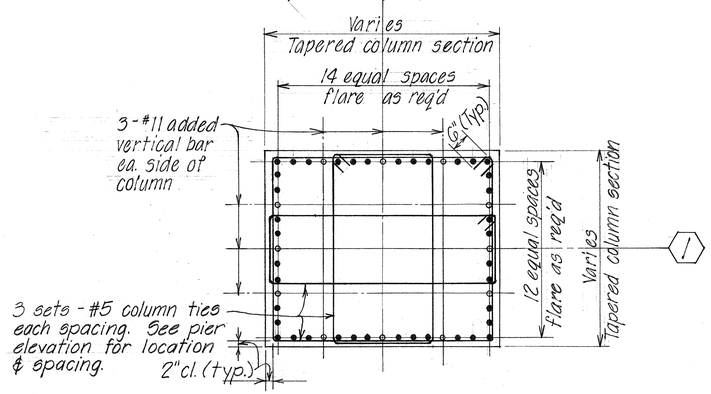


## TYPICAL TAPERED COLUMN SECTION (D/6)

Scale: 1/2" = 1'-0"

{ 40 continuous bars
12 added bars

| ORIGINAL PLAN | | DATE |
|---|---|---|
| | SURVEY PLOTTED BY | |
| | DRAWN BY L.M. | 2/73 |
| | TRACED BY | |
| | DESIGNED BY M.T. | 2/73 |
| NOTE BOOK | QUANTITIES BY L.M. & G.U. | 2/73 |
| No. | CHECKED BY L.K. | 2/73 |

STATE OF HAWAII
DEPARTMENT OF TRANSPORTATION
HIGHWAYS DIVISION

GOLF COURSE SEPARATION

PIER DETAILS - BORING LOGS

Leilehua Interchange
F.A.I. Proj. No. I-H2-1(8)-G January, 1973

SHEET No. 6 OF 20 SHEETS

| FED. ROAD DIST. NO. | STATE | FED. AID PROJ. NO. | FISCAL YEAR | SHEET NO. | TOTAL SHEETS |
|---|---|---|---|---|---|
| HAWAII | HAW. | I-H2-1(8)-6 | 1973 | 126 | 160 |

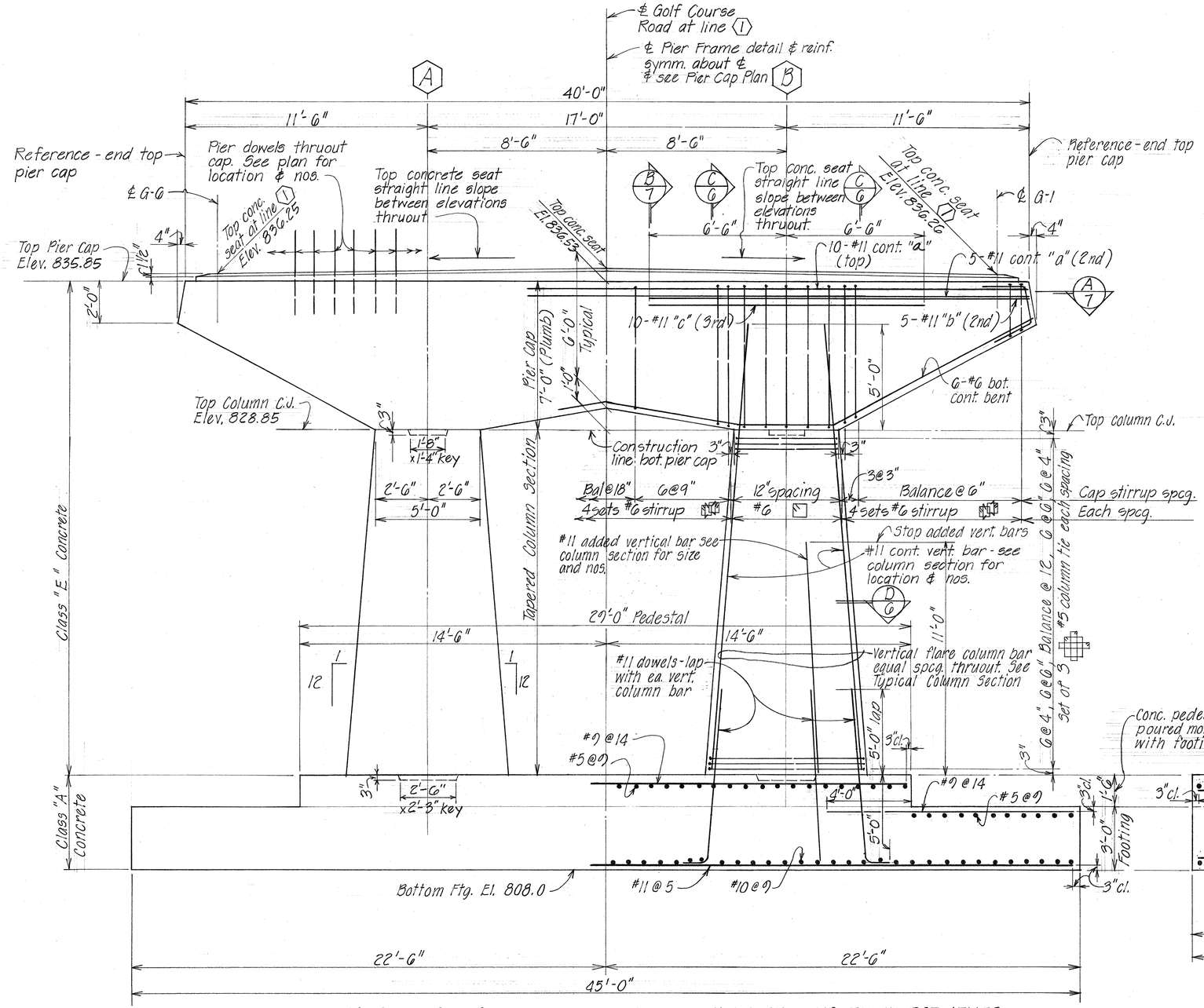


HALF SHOWING DIMENSIONS

HALF SHOWING REINFORCEMENTS

ELEVATION - PIER LINE 1 Scale: 3/8" = 1'-0"

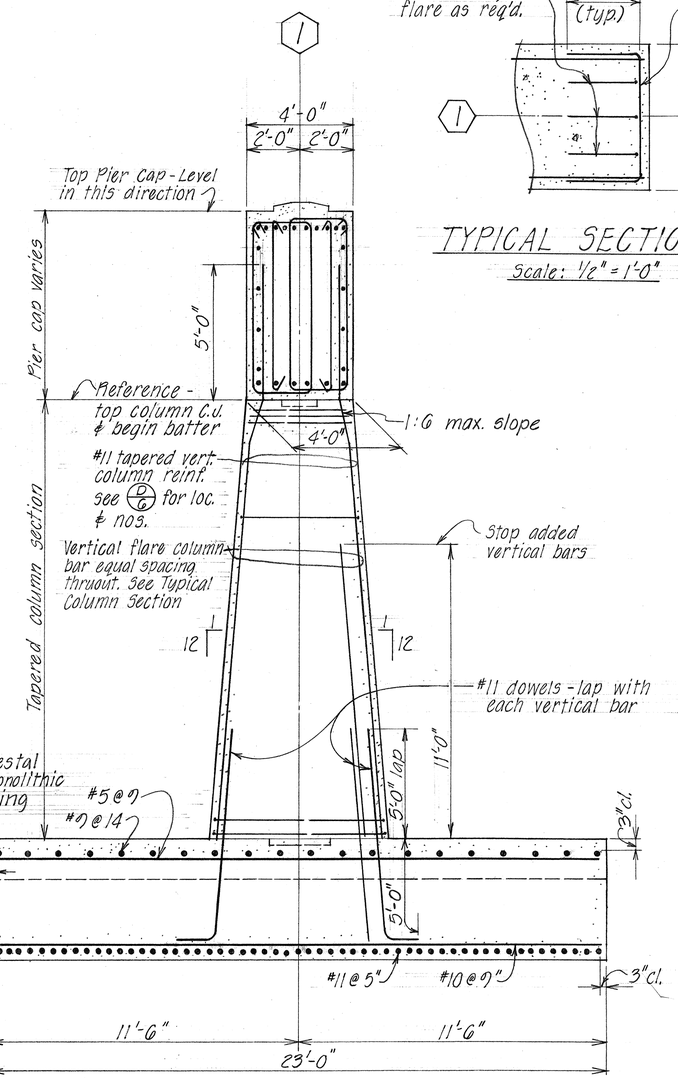


SECTION B/7

Scale: 3/8" = 1'-0"

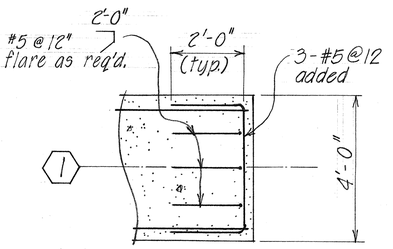


TYPICAL SECTION A/7

Scale: 1/2" = 1'-0"

STATE OF HAWAII
DEPARTMENT OF TRANSPORTATION
HIGHWAYS DIVISION

GOLF COURSE SEPARATION

PIER DETAILS

Leilehua Interchange
F.A.I. Proj. No. I-H2-1(8)-6 January, 1973

SHEET No. 7 OF 20 SHEETS

| ORIGINAL PLAN | | DATE |
|---|---|---|
| | SURVEY PLOTTED BY | |
| | DRAWN BY L.N. | 2/72 |
| | TRACED BY " " | " |
| | DESIGNED BY N.T. | 3/72 |
| NOTE BOOK | QUANTITIES BY L.H.A. & G.U. | 3/72 |
| No. | CHECKED BY L.A. | 3/72 |

| FED. ROAD DIST. NO. | STATE | FED. AID PROJ. NO. | FISCAL YEAR | SHEET NO. | TOTAL SHEETS |
|---|---|---|---|---|---|
| HAWAII | HAW. | I-H2-1(8)G | 1973 | 127 | 160 |

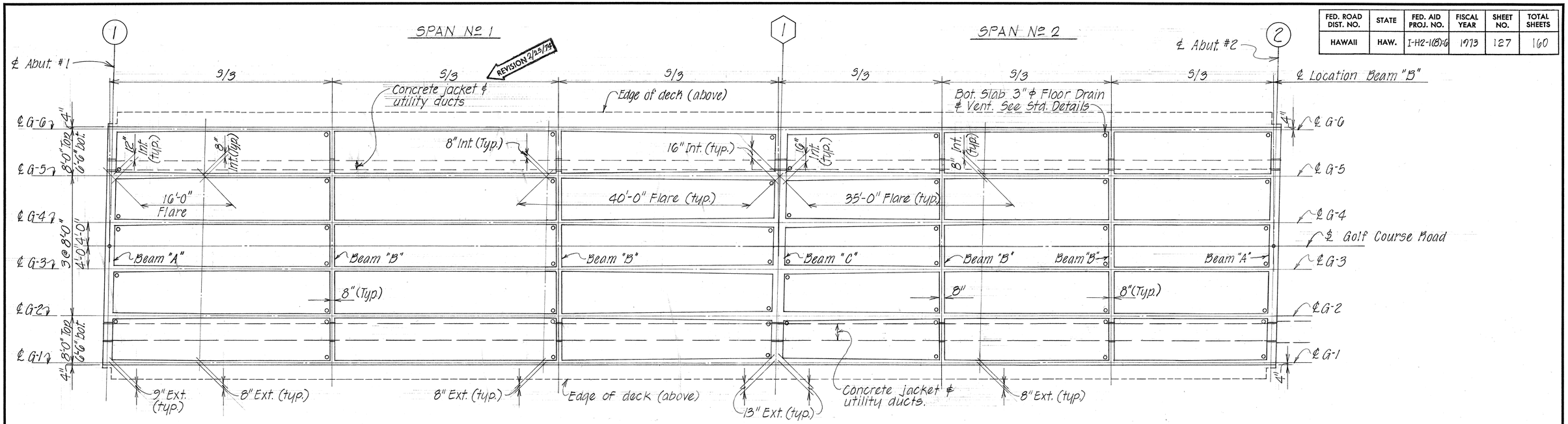


## DECK FRAMING PLAN

Scale: 1/8" = 1'-0"

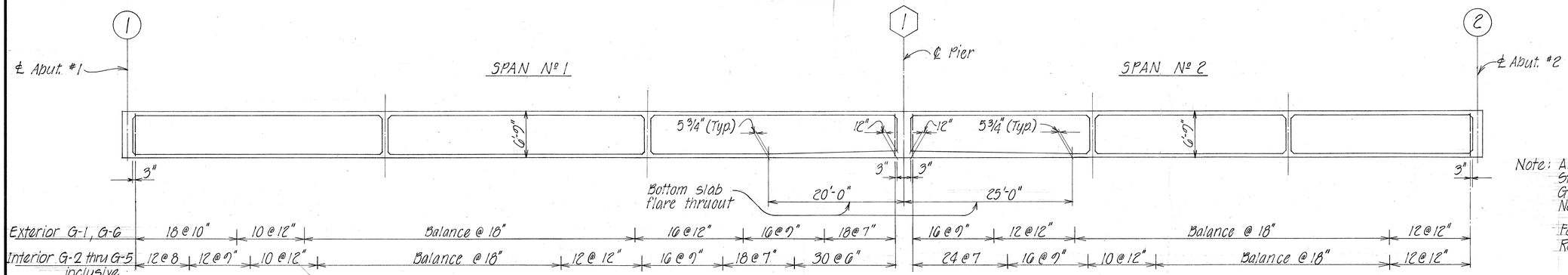


## GIRDER STIRRUP SPACING

Scale: 1/8" = 1'-0"

Note: All stirrups to be #5 ⊔ open stirrup. Stirrups shall be placed plumb. Girder depth measured plumb, see Normal Section.

For Standard Box Girder Details & Reinforcement, refer to DB-101-1,2,3

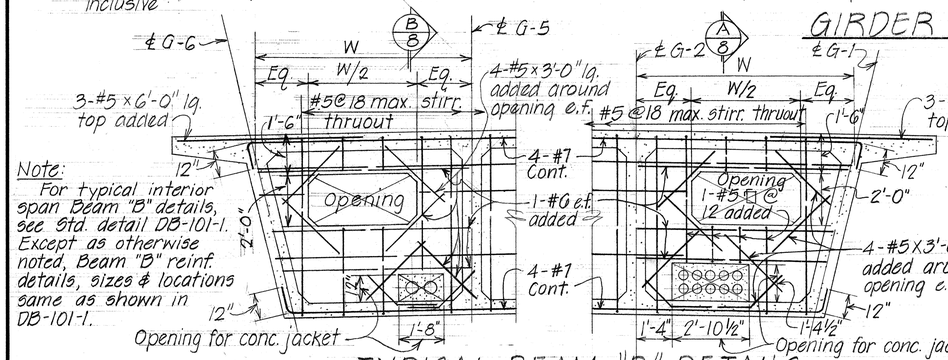


Note: For typical interior span Beam "B" details, see Std. detail DB-101-1. Except as otherwise noted, Beam "B" reinf. details, sizes & locations same as shown in DB-101-1.

REVISION 2/25/74

## TYPICAL BEAM "B" DETAILS (AT NON-CONTINUOUS TRANVERSE ENDS)

Scale: 3/8" = 1'-0"

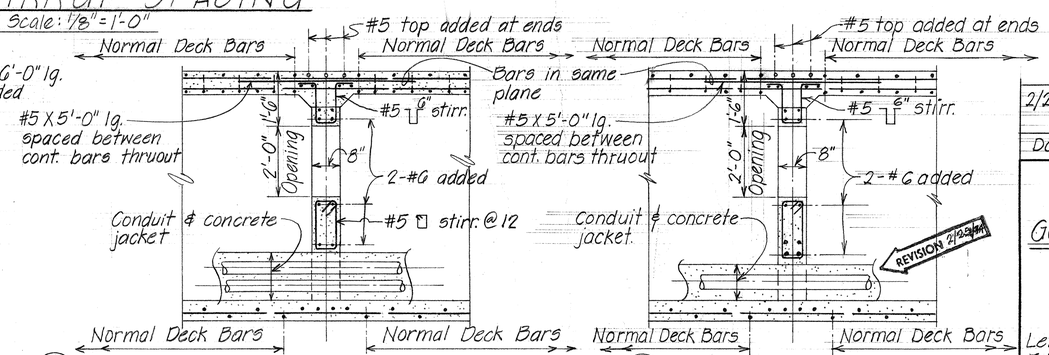


A/8 TYPICAL SECTION Scale: ½" = 1'-0"

B/8 TYPICAL SECTION

| Date | Revision |
|---|---|
| 2/25/74 | Added - 2 HECO conduits & conc. jacket between G-5 - G-6 |

STATE OF HAWAII
DEPARTMENT OF TRANSPORTATION
HIGHWAYS DIVISION

# GOLF COURSE SEPARATION

## DECK FRAMING PLAN AND DETAILS

Leilehua Interchange
F.A.I. Proj. No. I-H2-1(8)·G January, 1973

SHEET No. 8 OF 20 SHEETS

| ORIGINAL PLAN | | DATE |
|---|---|---|
| SURVEY PLOTTED BY | | |
| DRAWN BY | L.N. | 3/73 |
| TRACED BY | L.N. | 3/73 |
| DESIGNED BY | M.T. | 3/73 |
| QUANTITIES BY | N.Y.S.T. | 3/73 |
| CHECKED BY | L.A. | 3/73 |
| NOTE BOOK | | |
| No. | | |

CO 400

| FED. ROAD DIST. NO. | STATE | FED. AID PROJ. NO. | FISCAL YEAR | SHEET NO. | TOTAL SHEETS |
|---|---|---|---|---|---|
| HAWAII | HAW. | I-H2-1(8)G | 1973 | 128 | 160 |

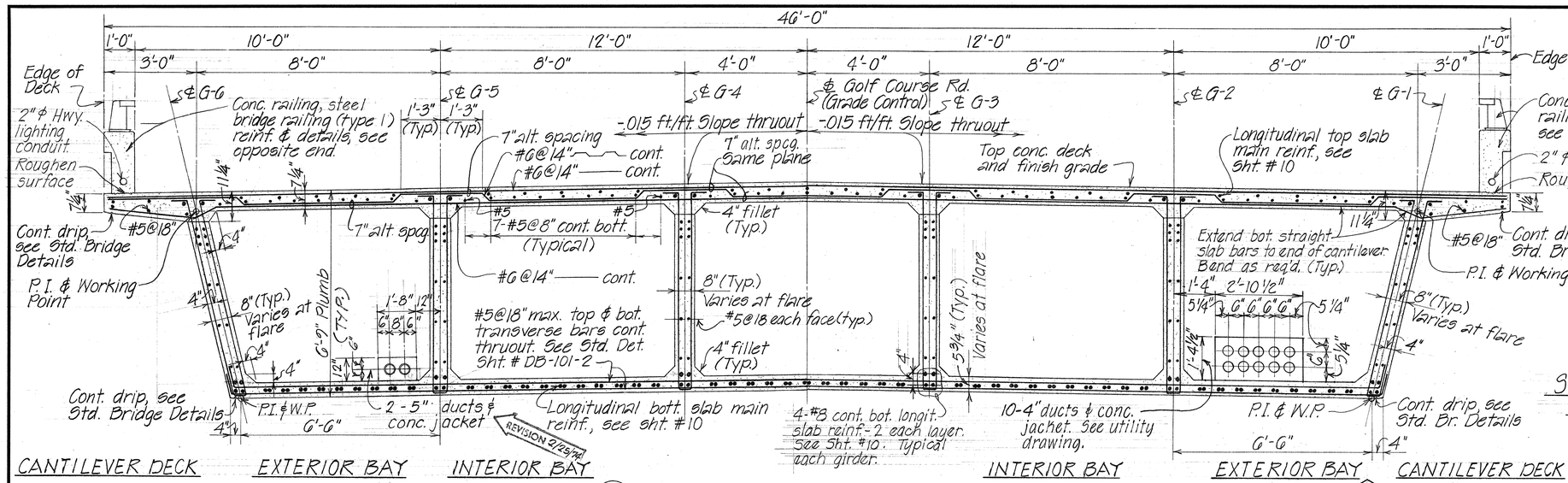


H/9 NORMAL DECK SECTION
Scale: 1/2" = 1'-0"

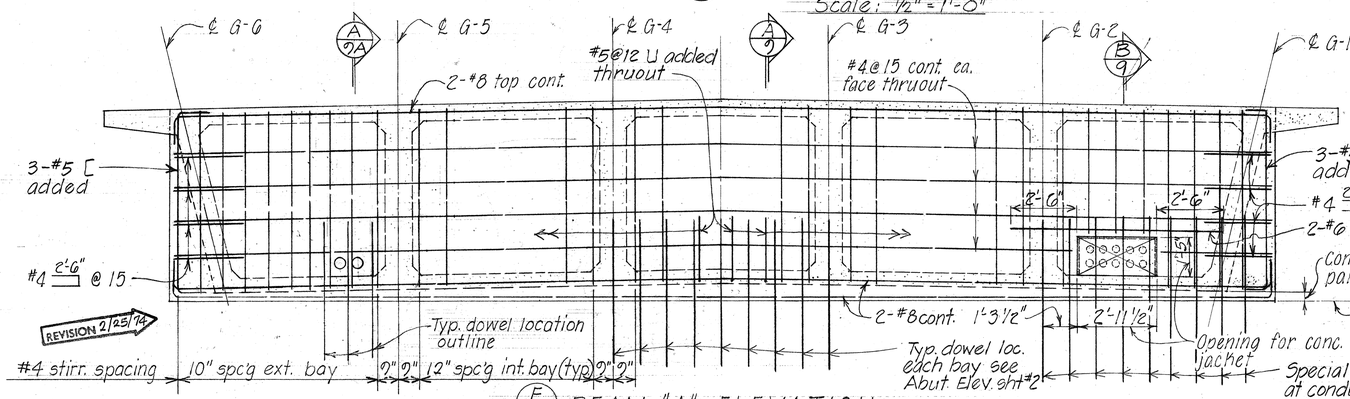


F/9 BEAM "A" ELEVATION
Scale: 3/8" = 1'-0"

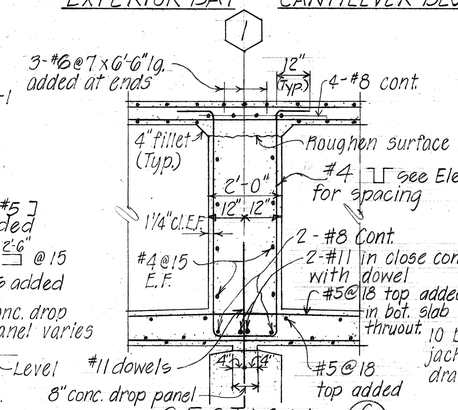


C/9 SECTION
Scale: 1/2" = 1'-0"

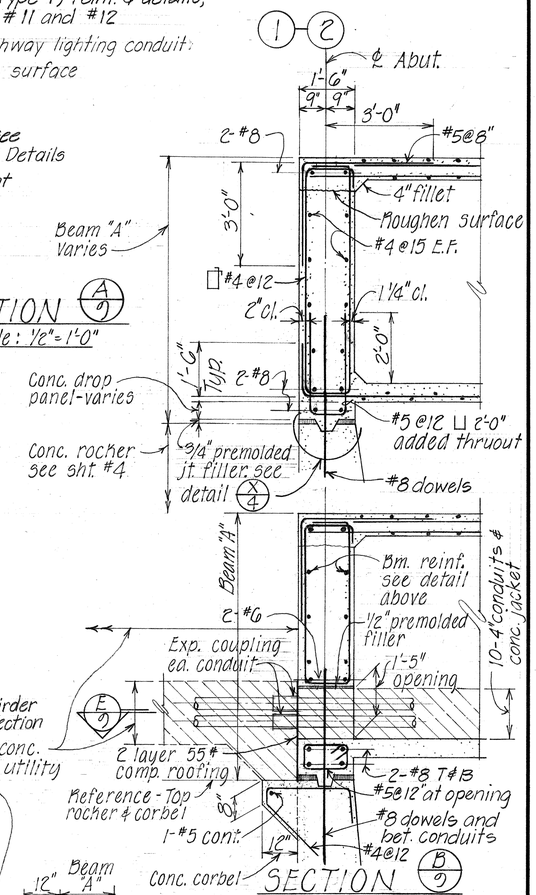


SECTION A/9
Scale: 1/2" = 1'-0"

SECTION B/9
Scale: 1/2" = 1'-0"

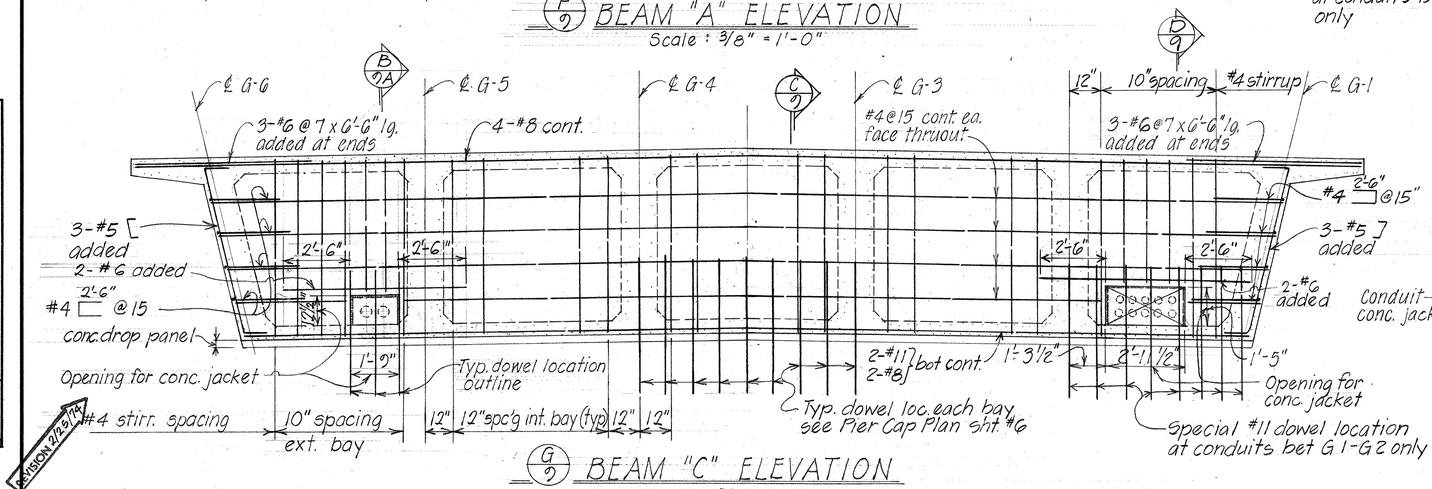


G/9 BEAM "C" ELEVATION
Scale: 3/8" = 1'-0"

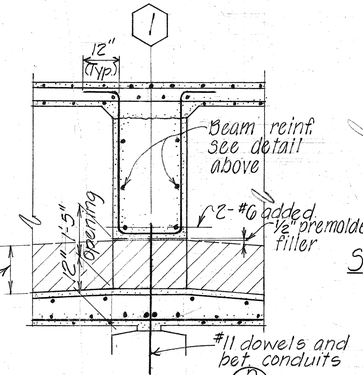


D/9 SECTION
Scale: 1/2" = 1'-0"

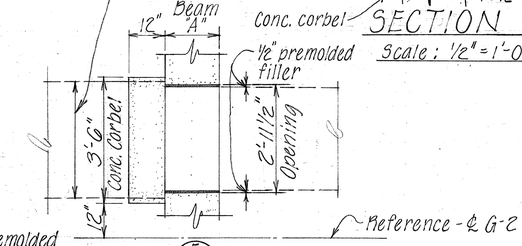


E/9 SECTION
Scale: 1/2" = 1'-0"

| ORIGINAL PLAN | SURVEY PLOTTED BY | DATE |
|---|---|---|
| | DRAWN BY L.A.M. | 2/73 |
| | TRACED BY | " |
| NOTE BOOK | DESIGNED BY N.T. | 2/73 |
| | QUANTITIES BY L.A.M. | " |
| No. | CHECKED BY L.A.G.T. | 2/73 |

STATE OF HAWAII
DEPARTMENT OF TRANSPORTATION
HIGHWAYS DIVISION

# GOLF COURSE SEPARATION

## DECK SECTIONS AND DETAILS

Leilehua Interchange
F.A.I. Proj. No. I-H2-1(8):G January, 1973

SHEET No. 9 OF 20 SHEETS

| Date | Revision |
|---|---|
| 2/25/74 | Added - 2 HECO conduit & conc. jacket between G-5 - G-6 |

CO 401

| FED. ROAD DIST. NO. | STATE | FED. AID PROJ. NO. | FISCAL YEAR | SHEET NO. | TOTAL SHEETS |
|---|---|---|---|---|---|
| HAWAII | HAW. | I-H2-1(8)'6 | 1973 | CO401S-1 | 160 |

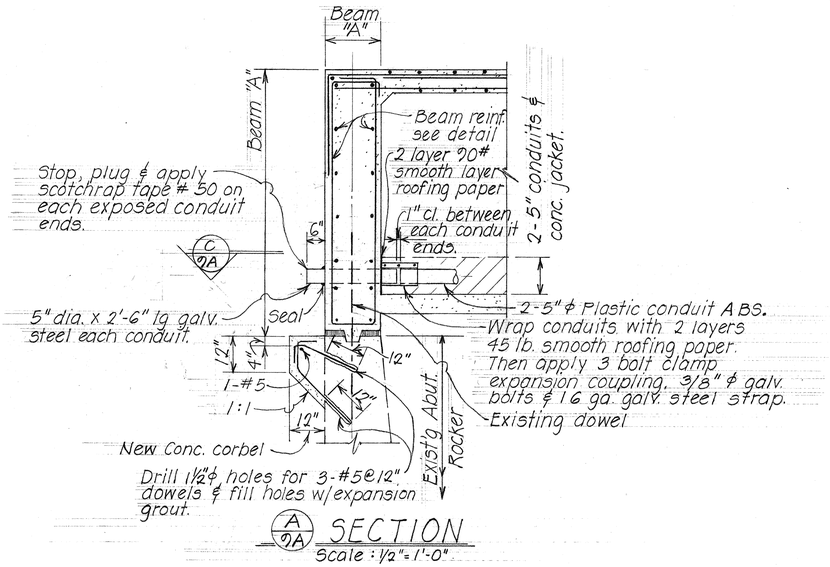


A 9A SECTION
Scale: ½" = 1'-0"

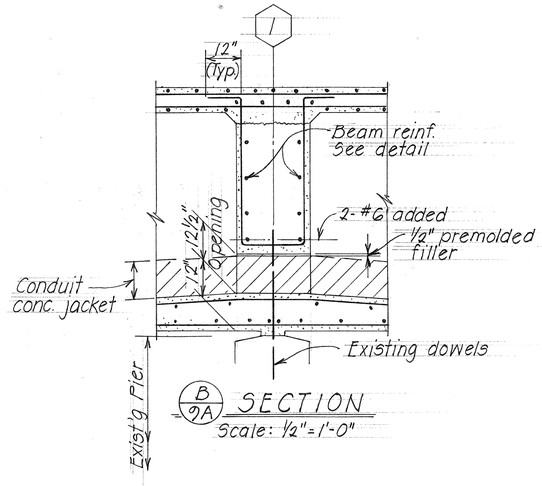


B 9A SECTION
Scale: ½" = 1'-0"

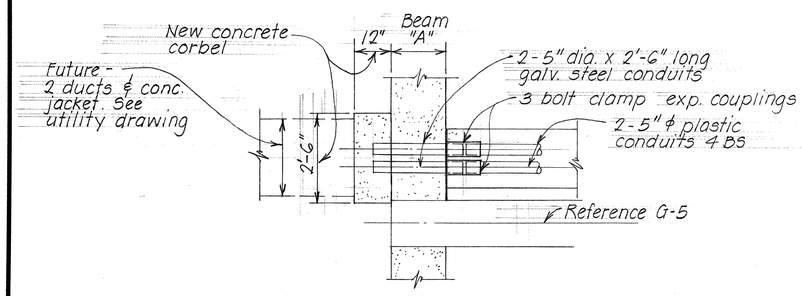


C 9A SECTION
Scale: ½" = 1'-0"

| Date | Revision |
|---|---|
| 2/25/74 | Sheet added to Contract Plan set for additional details required on sht Nos CO 401 |

STATE OF HAWAII
DEPARTMENT OF TRANSPORTATION
HIGHWAYS DIVISION

GOLF COURSE SEPARATION

DECK SECTIONS AND DETAILS

Leilehua Interchange
F.A.I. Proj. No. I-H2-1(8)'6 January, 1973

SHEET No. 9A OF 20 SHEETS

CO 401 S-1

| ORIGINAL PLAN | SURVEY PLOTTED BY | DATE |
|---|---|---|
| | DRAWN BY | " |
| | TRACED BY | " |
| NOTE BOOK | DESIGNED BY | " |
| | QUANTITIES BY | " |
| No. | CHECKED BY | " |

K+E ® TRACING PAPER

| FED. ROAD DIST. NO. | STATE | FED. AID PROJ. NO. | FISCAL YEAR | SHEET NO. | TOTAL SHEETS |
|---|---|---|---|---|---|
| HAWAII | HAW. | I-H2-1(8)G | 1973 | 120 | 160 |

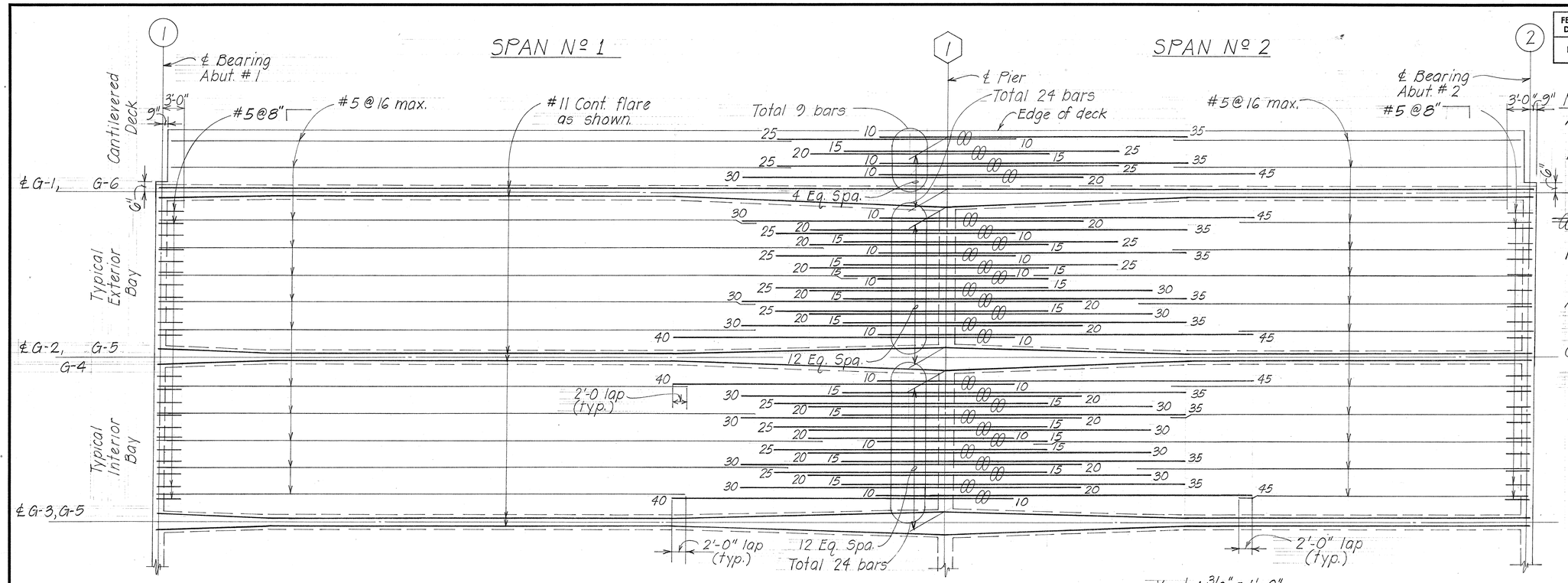


## LONGITUDINAL TOP SLAB MAIN REINFORCEMENT

Scale : Vert. : 3/8" = 1'-0"
Horiz. : 1/8" = 1'-0"

NOTES:

All reinforcement #11 unless otherwise noted.

Numbers at ends of bars indicate distance in feet from adjacent ℄ Pier for top reinforcement and ℄ Span for bottom.

⊖ indicates bundle bars in groups of two.

For additional slab reinf. details - see sht. numbers DB-101-1, 2, 3 Normal Sections.

All #5 & #6 bars shall be extended & lapped with the adjacent #11 bars as shown.

Continuous added are bars from one span extended partially into the adjacent span or spans.

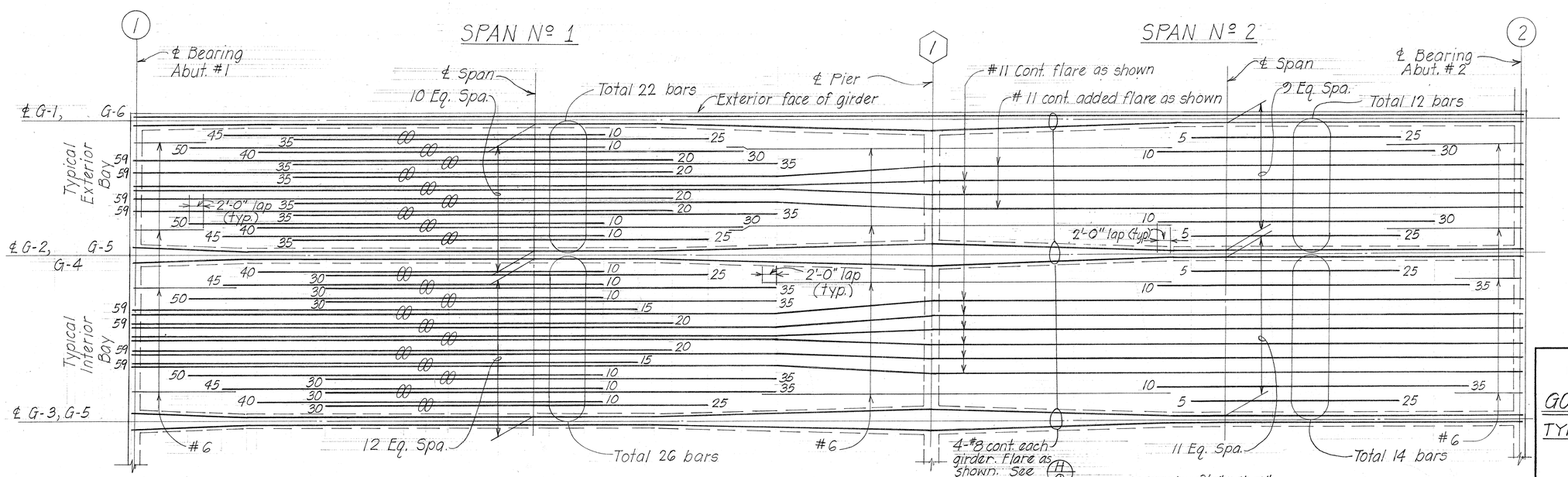


## LONGITUDINAL BOTTOM SLAB MAIN REINFORCEMENT

Scale : Vert. : 3/8" = 1'-0"
Horiz. : 1/8" = 1'-0"

| ORIGINAL PLAN | | DATE |
|---|---|---|
| SURVEY PLOTTED BY | | |
| DRAWN BY | L.M.A. | 2/72 |
| TRACED BY | " " | " " |
| DESIGNED BY | M.T. | 2/72 |
| QUANTITIES BY | H.Y.G.T. | 2/72 |
| CHECKED BY | L.A.Y. | 2/72 |
| NOTE BOOK No. | | |

STATE OF HAWAII
DEPARTMENT OF TRANSPORTATION
HIGHWAYS DIVISION

GOLF COURSE SEPARATION

TYPICAL DECK REINFORCEMENT

Leilehua Interchange
F.A.I. Proj. No. I-H2-1(8):G January, 1973

SHEET No. 10 OF 20 SHEETS

402

| FED. ROAD DIST. NO. | STATE | FED. AID PROJ. NO. | FISCAL YEAR | SHEET NO. | TOTAL SHEETS |
|---|---|---|---|---|---|
| HAWAII | HAW. | I-H2-1(8)6 | 1973 | 130 | 160 |

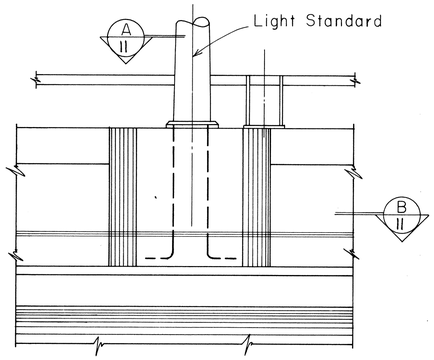


EXTERIOR ELEVATION
Scale: $\frac{3}{4}$" = 1'-0"

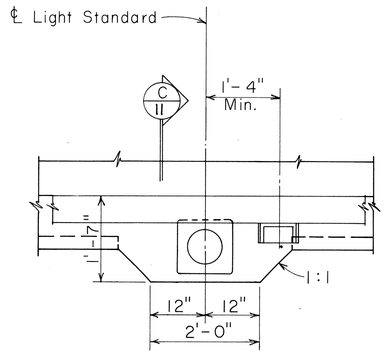


PLAN (A/II)
Scale: $\frac{3}{4}$" = 1'-0"

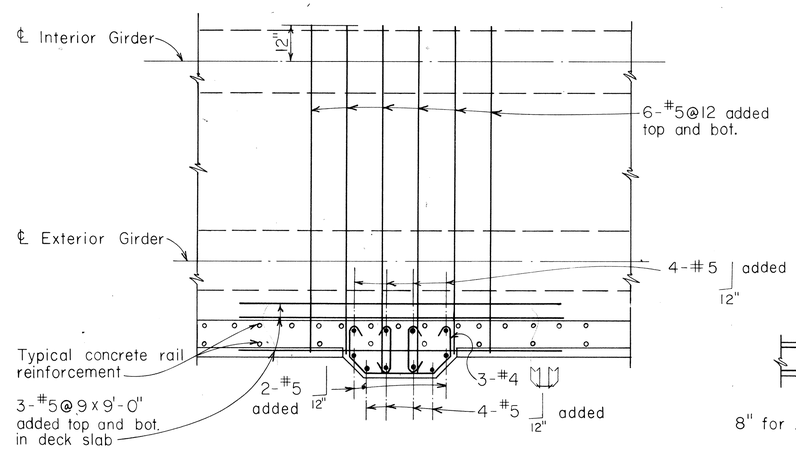


SECTION (B/II)
Scale: $\frac{1}{2}$" = 1'-0"

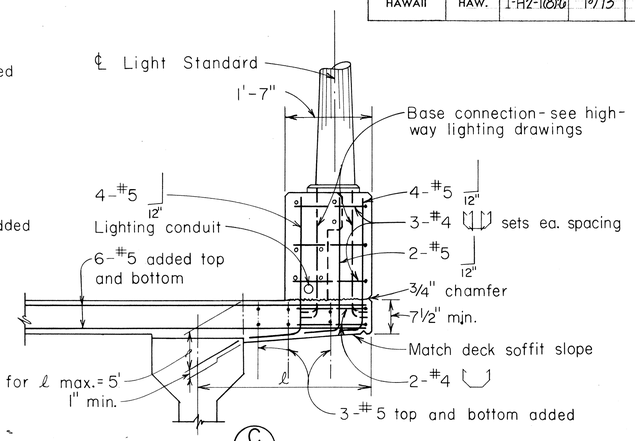


SECTION (C/II)
Scale: $\frac{3}{4}$" = 1'-0"

# DETAILS AT LIGHT STANDARD

Scale: As Noted

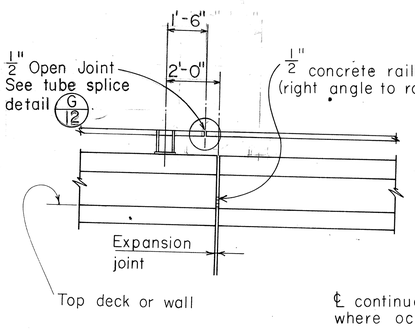


AT EXPANSION JOINT

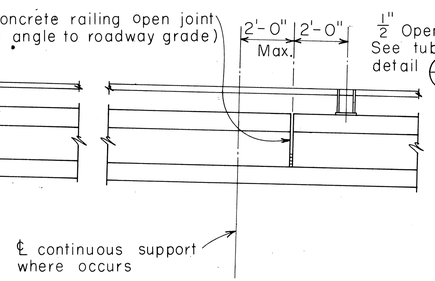


AT CONTINUOUS SUPPORT

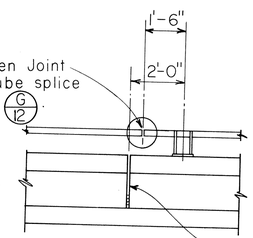


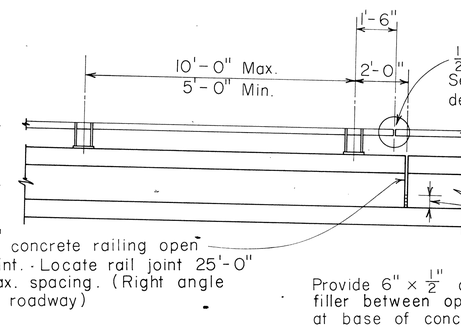


INTERMEDIATE

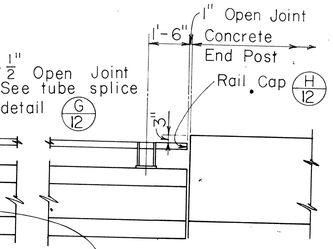


AT CONCRETE END POST

## EXTERIOR ELEVATION

Scale: $\frac{3}{8}$" = 1'-0"

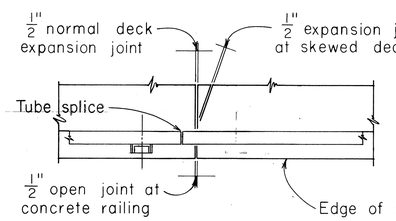


AT EXPANSION JOINT

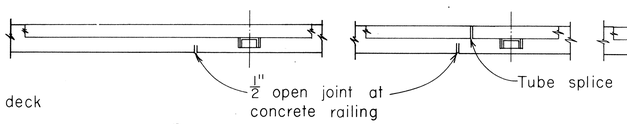


AT CONTINUOUS SUPPORT

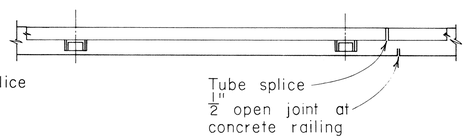


INTERMEDIATE

## PLAN

Scale: $\frac{3}{8}$" = 1'-0"

NOTES

Tubing shall be shop bent to fit horizontal curve when radius is less than 950 ft.
Post shall be normal to grade.
Concrete railing and metal rail joints shall be located at all deck joints.
Tubing shall be continuous over not less than 3 posts except as noted on plans.
All exposed corner of metal railing shall be ground smooth.
Rail assemblage shall be galvanized after fabrication.
All anchor bolts, bolts, nuts, plates and washers shall be galvanized.
Welding shall meet the requirement of Section 501 of the Standard Specifications.

Material shall conform to the following requirements:
1. Tubular steel rails ASTM A500 Grade B.
2. Steel posts ASTM A36.
3. Sleeves for tubular rails ASTM A36.
4. Stud bolts ASTM A108 Grades 1015 to 1020.
5. Anchor bolts, bolts, nuts and washers ASTM A325.
6. Shims commercial quality galvanized steel.
7. Sleeve bolts and nuts ASTM A108 Grades 1015 to 1020.

For additional railing details, see sht. #12.

| NO. | REVISION | APPROVED BY | DATE |
|---|---|---|---|
| | | | |

STATE OF HAWAII
DEPARTMENT OF TRANSPORTATION
HIGHWAYS DIVISION

TYPICAL DETAIL

STEEL BRIDGE RAILING (TUBULAR)
ONE RAIL COMBINATION TYPE
ON PARAPET (TYPE 2)

Leilehua Interchange
F.A.I. Proj. No I-H2-1(8)6
January 1973

SHEET No. 11 OF 20 SHEETS

| ORIGINAL PLAN | | DATE |
|---|---|---|
| | SURVEY PLOTTED BY | |
| | DRAWN BY | " |
| | TRACED BY | " |
| NOTE BOOK | DESIGNED BY | " |
| | QUANTITIES BY | " |
| No. | CHECKED BY | " |

| FED. ROAD DIST. NO. | STATE | FED. AID PROJ. NO. | FISCAL YEAR | SHEET NO. | TOTAL SHEETS |
|---|---|---|---|---|---|
| HAWAII | HAW. | I-H2-1(8)·6 | 1973 | 131 | 160 |

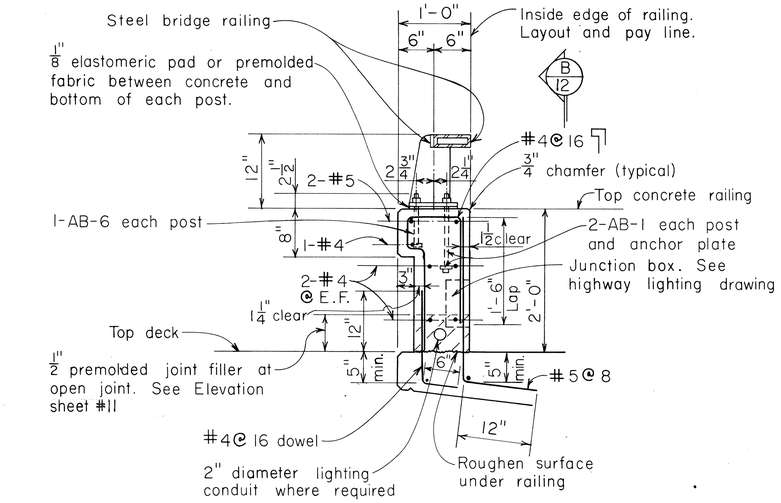


## TYPICAL SECTION

Scale: 1" = 1'-0"

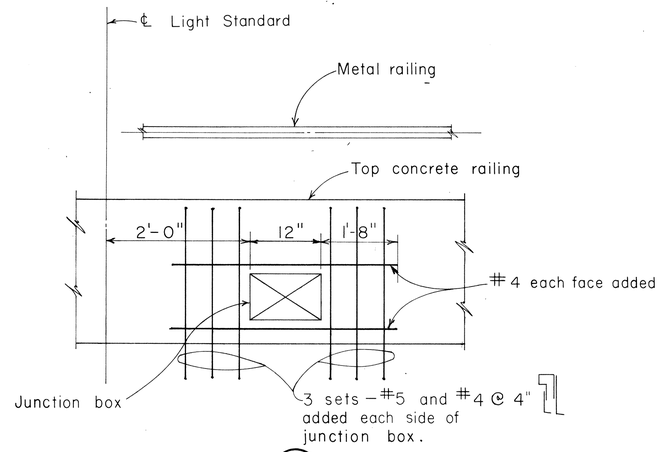


## ELEVATION B/12 ADDED REINFORCEMENT AT JUNCTION BOX

Scale: 1" = 1'-0"

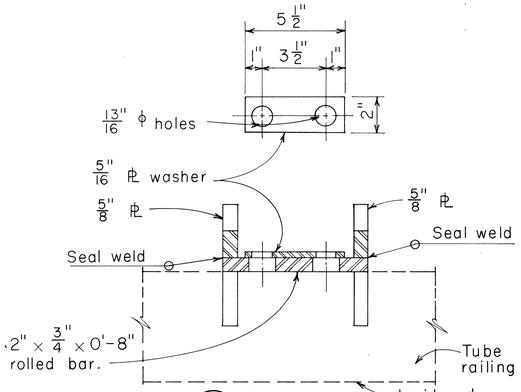


## D/12 SECTION

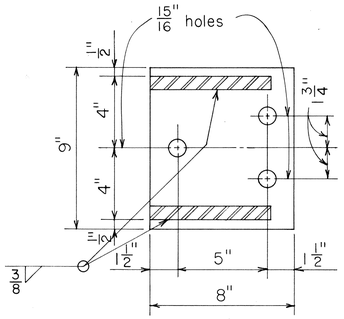


## F/12 SECTION

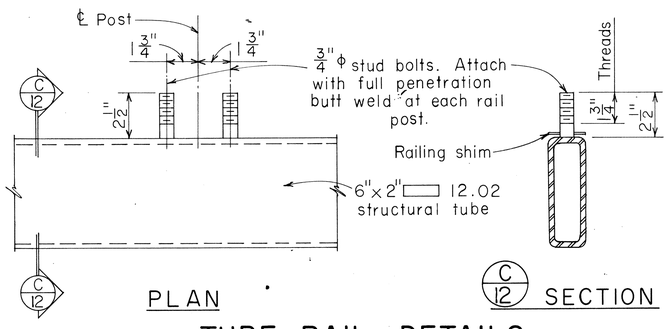


## PLAN

## C/12 SECTION

## TUBE RAIL DETAILS

Scale: 3" = 1'-0"

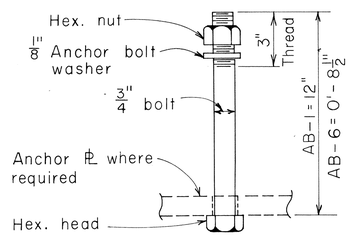


## TYPICAL ANCHOR BOLT (AB) ASSEMBLY

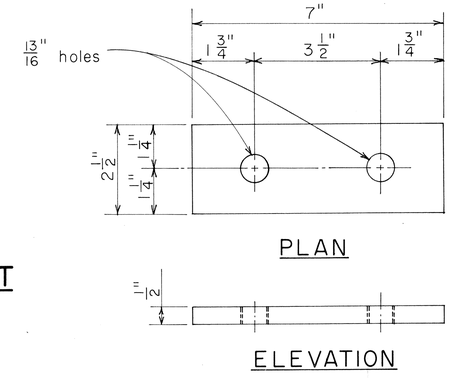


## PLAN

## TYPICAL ANCHOR PL DETAIL

Scale: Half Size

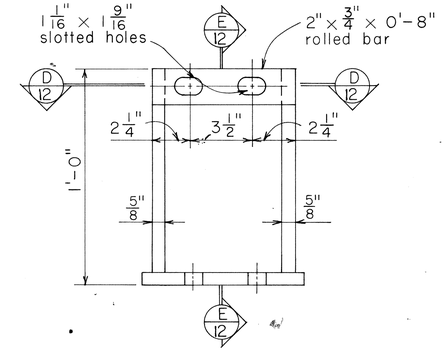


## ELEVATION

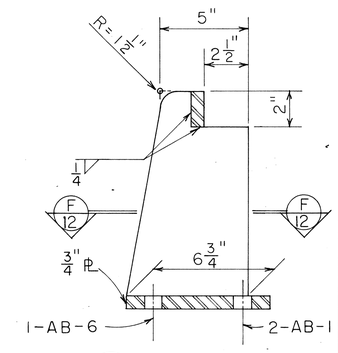


## E/12 SECTION

## RAIL POST DETAILS

Scale: 3" = 1'-0"

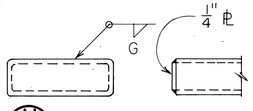


## H/12 RAIL CAP

Scale: 3" = 1'-0"

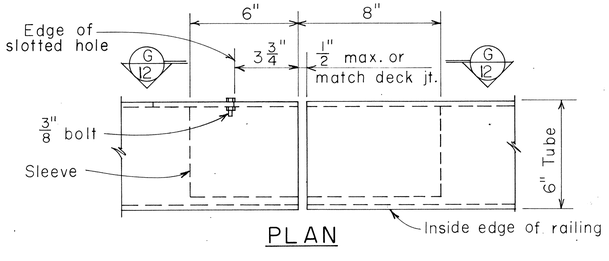


## PLAN

## VIEW G/12

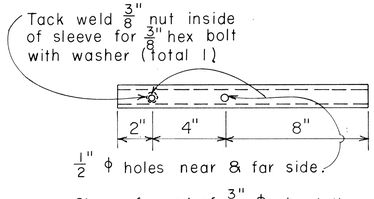


Sleeve formed of 3/16" PL, bent thus: for sliding fit inside of rail tube.

## SLEEVE


## TUBE SPLICE DETAIL

Scale: 3" = 1'-0"

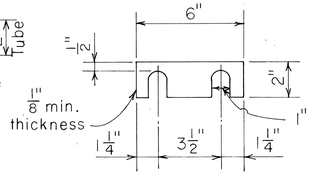


## RAILING SHIM DETAIL

Scale: 3" = 1'-0"

| NO. | REVISION | APPROVED BY | DATE |
|---|---|---|---|
| | | | |

STATE OF HAWAII
DEPARTMENT OF TRANSPORTATION
HIGHWAYS DIVISION

TYPICAL DETAIL

STEEL BRIDGE RAILING (TUBULAR)
ONE RAIL COMBINATION TYPE
ON PARAPET (TYPE 2)

Leilehua Interchange
F.A.I. Proj. No. I-H2-1(8)·6

January 1973

SHEET No. 12 OF 20 SHEETS

| ORIGINAL PLAN | SURVEY PLOTTED BY | DATE |
|---|---|---|
| | TOPOS BY | " |
| | TRACED BY | " |
| NOTE BOOK | DESIGNED BY | " |
| No. | QUANTITIES BY | " |
| | CHECKED BY | " |
| | CHECKED BY | " |

| FED. ROAD DIST. NO. | STATE | FED. AID PROJ. NO. | FISCAL YEAR | SHEET NO. | TOTAL SHEETS |
|---|---|---|---|---|---|
| HAWAII | HAW. | I-H2-1(8)-2 | 1973 | 122 | 160 |

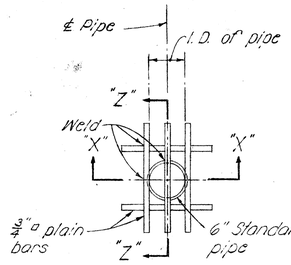


PLAN

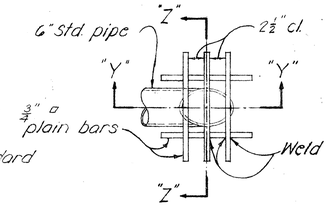


PLAN

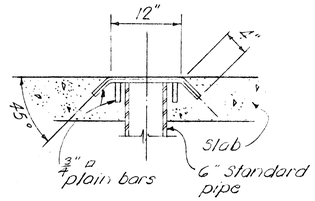


SECTION "Z-Z"

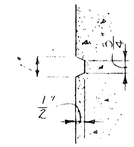


TYPICAL CONCRETE GROOVE DETAIL

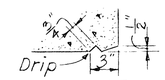


DRIP DETAIL

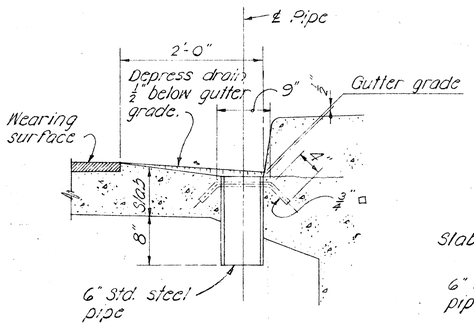


SECTION "X-X"

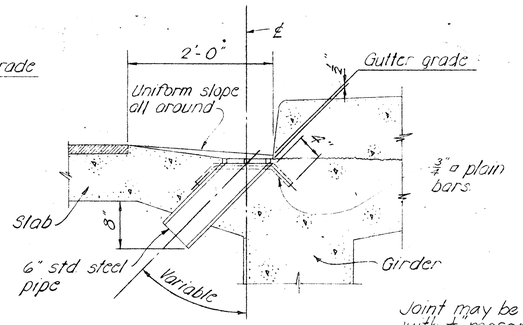


SECTION "Y-Y"

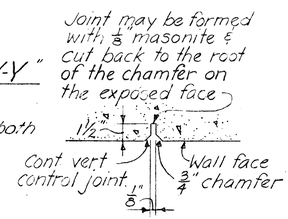


NOTE:

Metal drains shall be considered incidental to Class A Concrete in both concrete and steel bridges and will not be paid for separately.
Assemblage of grillage and pipe shall be hot-dip galvanized after all welding is completed.

TYPICAL DRAINAGE DETAILS

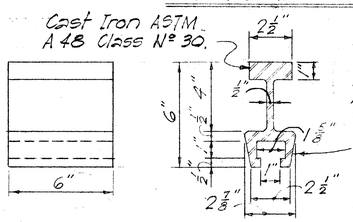


INSERT DETAIL

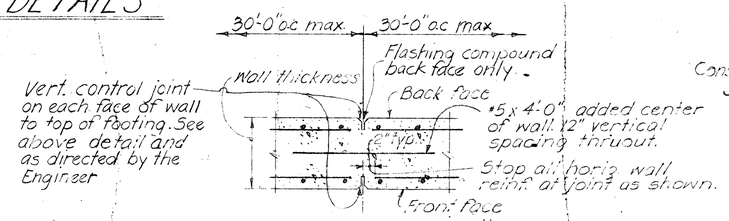


CONTROL JOINT DETAILS

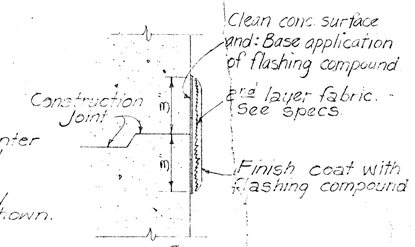


TYP. FLASHING COMPOUND WATERPROOFING DETAIL

# GENERAL NOTES

1 - All concrete shall be Class A unless otherwise noted.
2 - Reinforcing shall be detailed in accordance with A.C.I. Manual of Standard Practice for Detailing Reinforced Concrete Highway Structures unless otherwise noted.
3 - Clearance for reinforcing bars shall be as follows, unless otherwise noted:
  a - 1 1/2" For stirrups of beams & pier caps.
  b - 2" For ties of columns.
  c - 2" For formed walls.
  d - 3" For footings.
4 - Minimum spacing between parallel bars shall be 2 1/2 times the diameter of bars, but in no case shall the clear distance between the bars be less than 1 1/2 times the maximum size of the coarse aggregate.
5 - All dimensions relating to reinforcing are to centers of bars unless otherwise noted.
6 - Reinforcing bars shall be securely tied at all intersections & lap splices & shall be held in place during pouring to maintain their proper locations as shown on plans.
7 - Vertical column bars shall be arranged in such a manner as to miss pier cap bars above as directed by the Engineer.
8 - Except as otherwise noted on drawings, all exterior corners & re-entrant angles in concrete work shall be chamfered 3/4" x 3/4".
9 - Concrete seats receiving steel plates, leadplates or neoprene pads shall be poured monolithically with supporting structures & top of concrete seats shall be finished with a steel trowel to a smooth level surface at the elevation shown on the plans.
10 - Elastomeric Pads: Bottom of bridge bearing pads shall be secured against displacement with adhesives approved by the Engineer. Pads shall be incidental to concrete and will not be paid for separately.
11 - Forms for all exposed surfaces of separation structures and surfaces of retaining walls visible from a traveled way or from a populated area shall be plywood except that metal forms may permitted provided a surface finish satisfactory to the Engineer can be obtained and the use of such forms is approved in writing by the Engineer. Forms for round columns shall be made of materials that will give a smooth finish and true dimensions as given in the plans. Forms for prestressed concrete members shall be either metal or plywood.
12 - Gothic letters and figures approximating dimensions shown will be acceptable if approved by the Engineer.
13 - The contractor shall verify the location of all existing utility lines and notify the respective owners before commencing work of excavation or driving of piles.
14 - Standard Detail Drawings refer to all structures in general, except for modifications as may be required for special conditions. For such modifications refer to the corresponding detailed drawings.

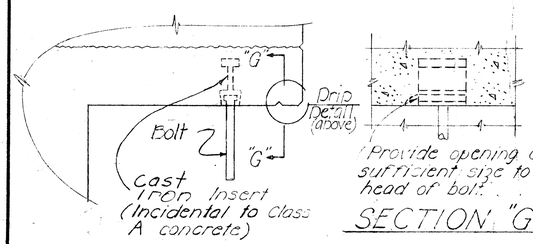


DETAIL of PIPE HANGERS & INSERTS




SECTION "G-G"

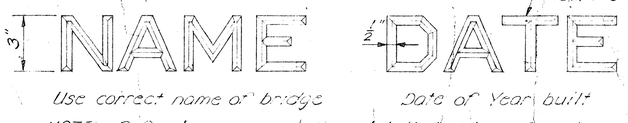


NOTE: Refer to corresponding detail drawings for placement of such names & dates at end post.
Exact details & spacing of letters & figures shall be as directed by the Engineer. See Note #12

TYPICAL DETAIL OF LETTERS & FIGURES AT CONCRETE END POST

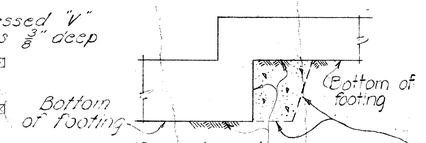


Note! In case of over excavation, the contractor shall backfill this area with minimum Class D concrete at his own expense.

TYPICAL EXCAVATION FOR CONTINUOUS FOOTING STEP-UP

APPROVAL RECOMMENDED:
Paul T. Yamashita — 1-23-70
BRIDGE DESIGN ENGINEER — DATE

APPROVED
For Paul T. Yamashita — 1-28-70
ASSISTANT CHIEF, ENGINEERING — DATE

| NO. | REVISION | APPROVED BY | DATE |
|---|---|---|---|
| | | | |

STATE OF HAWAII
DEPARTMENT OF TRANSPORTATION
HIGHWAYS DIVISION

STANDARD DETAILS
NOTES AND MISCELLANEOUS DETAILS

Date: October 1969

SHEET No. 13 OF 20 SHEETS DB-100

| ORIGINAL PLAN | SURVEY PLOTTED BY | DRAWN BY | TRACED BY | DESIGNED BY | QUANTITIES BY | CHECKED BY | DATE |
|---|---|---|---|---|---|---|---|
| NOTE BOOK No. | | | | | | | |

PRINTED ON NO. 1000H CLEARPRINT

| FED. ROAD DIST. NO. | STATE | FED. AID PROJ. NO. | FISCAL YEAR | SHEET NO. | TOTAL SHEETS |
|---|---|---|---|---|---|
| HAWAII | HAW. | F-112-1(8)a | 1973 | 183 | 160 |

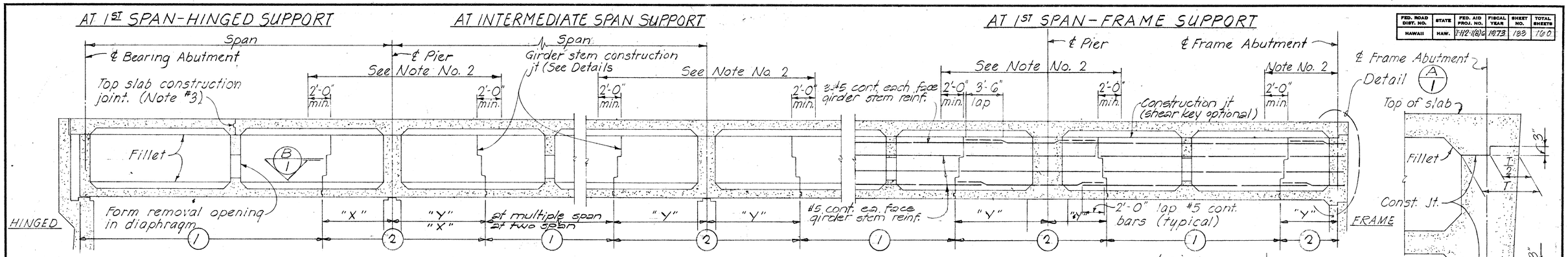


# PLACING DIAGRAM FOR SUPERSTRUCTURE CONCRETE

NOTE:

1. Numbers ① & ② indicate sequence of placing bottom slab & girder stem concrete. ② may be placed with ① when approved by the Engineer provided that the ① sections adjoining the ② sections are placed in this pour. For any deviation from the above the Contractor shall submit a diagram to the Engineer for approval.
2. No top slab construction joint or form removal opening shall be located in the region over the piers as noted, nor in the supporting section of a hinged span.
3. When top slab is not poured continuously, and top slab forms are not removed, construction joint in top slab shall be located over an intermediate diaphragm.
4. Top slab concrete shall be placed separately from the stem. Top slab concrete may be placed continuously or in parts as approved by the Engineer, providing pour is not in conflict with the above notes.
5. Dimension "X" = 1/4 span. "Y" = 1/5 span.
6. No lapping of main bars shall be permitted at construction joints.

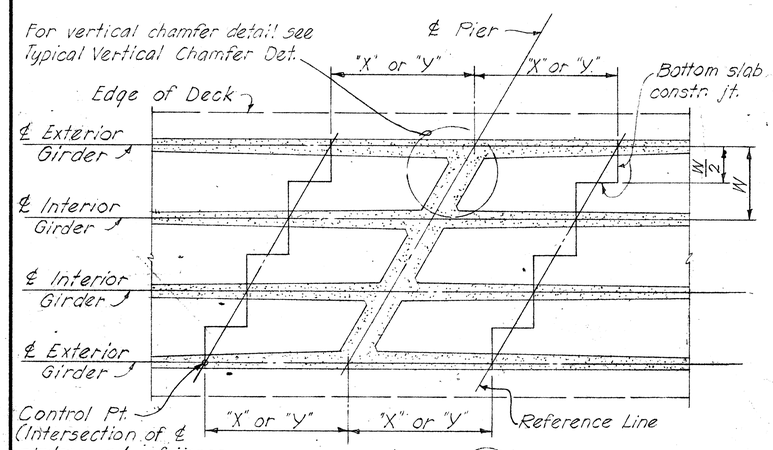


SECTION B/1

TREATMENT OF CONSTRUCTION JOINT
BRIDGES ON SKEW

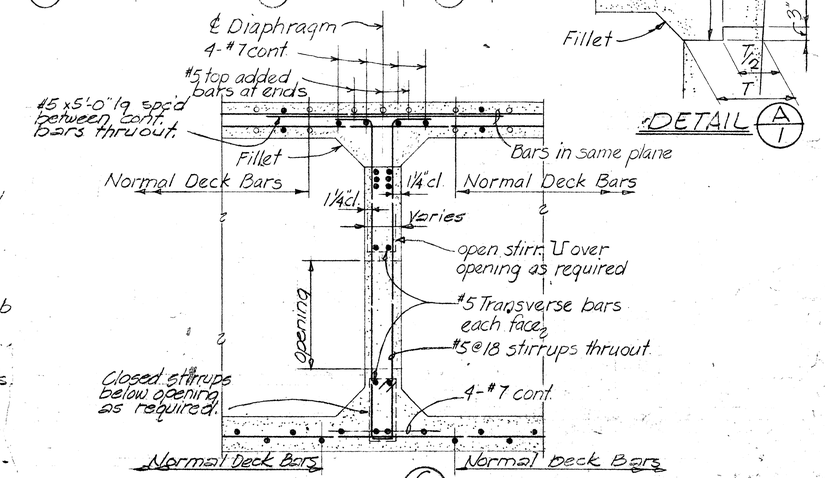


SECTION C/1

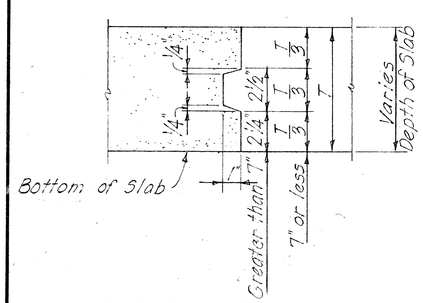


NOTE:

If the Contractor elects to leave top slab forms in place, form removal opening shall be omitted and replaced by 3" vent.

No vertical shoring shall be placed in the center half of top slab span W.

TYPICAL SLAB CONSTRUCTION JOINT DETAIL

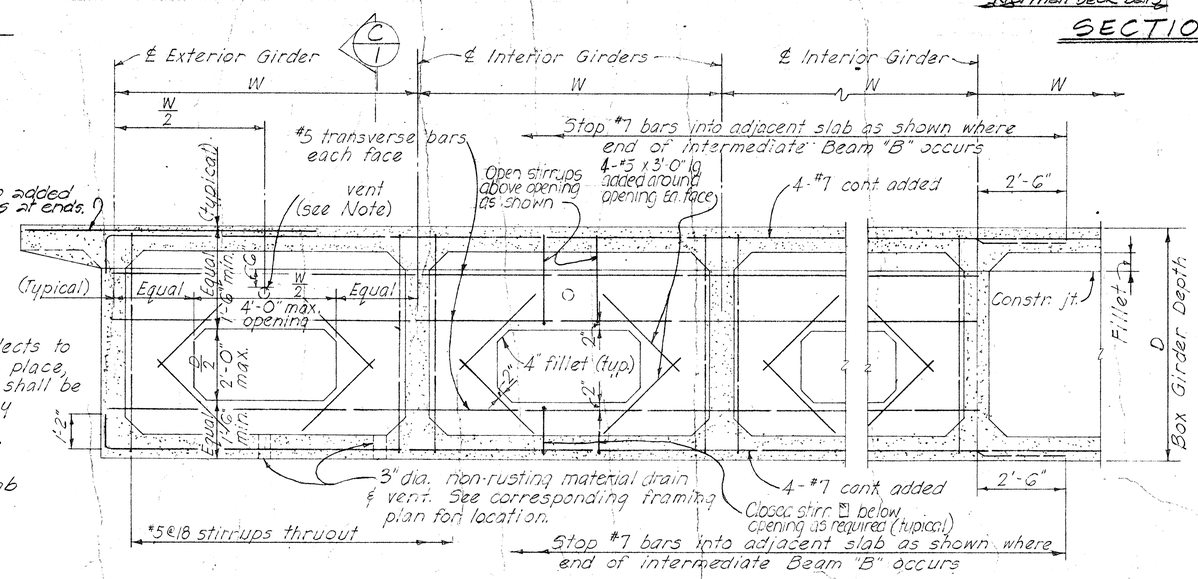


AT NON-CONTINUOUS ENDS TYPICAL INTERIOR SPAN

TYPICAL BEAM "B" DETAILS

| NO. | REVISION | APPROVED BY | DATE |
|---|---|---|---|
| | | | |

APPROVAL RECOMMENDED:
Paul T. Yamashita — 1-23-70
BRIDGE DESIGN ENGINEER — DATE

APPROVED
Paul T. Yamashita — 1-28-70
For ASSISTANT CHIEF, ENGINEERING — DATE

STATE OF HAWAII
DEPARTMENT OF TRANSPORTATION
HIGHWAYS DIVISION

STANDARD DETAILS
CONCRETE BOX GIRDER

SHEET No. 14 OF 20 SHEETS DB-101-1

| ORIGINAL PLAN | SURVEY PLOTTED BY | DATE |
|---|---|---|
| | DRAWN BY | |
| NOTE BOOK | TRACED BY | |
| No. | DESIGNED BY | |
| | QUANTITIES BY | |
| | CHECKED BY | |

PRINTED ON NO. 1000H CLEARPRINT

| FED. ROAD DIST. NO. | STATE | FED. AID PROJ. NO. | FISCAL YEAR | SHEET NO. | TOTAL SHEETS |
|---|---|---|---|---|---|
| HAWAII | HAW. | F-112-1(8)X | 1973 | 134 | 160 |

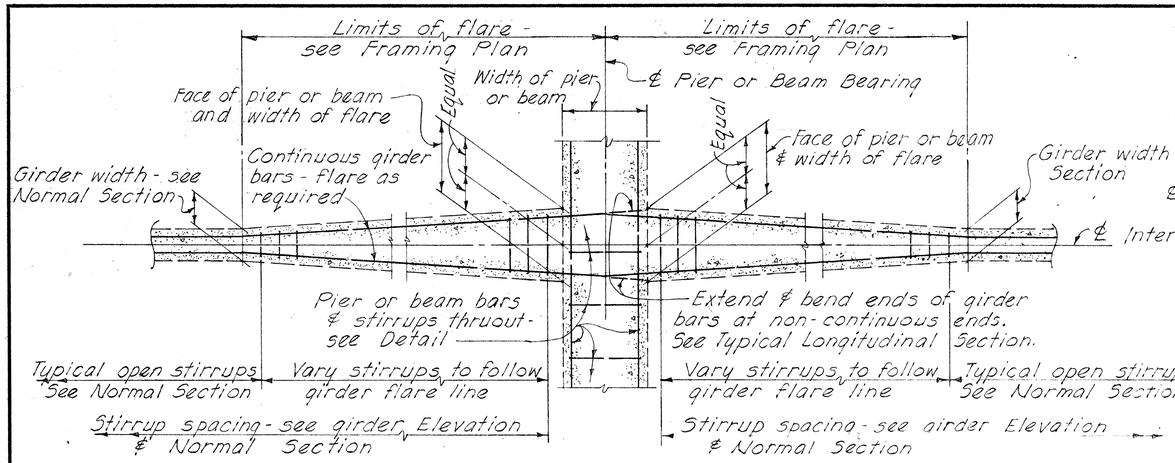


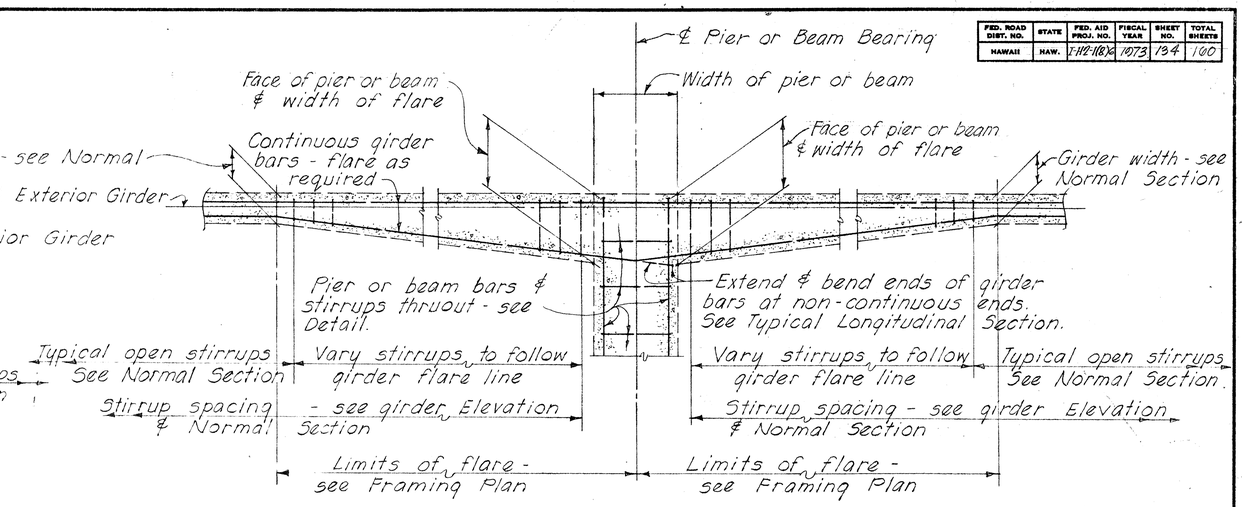


INTERIOR GIRDER — EXTERIOR GIRDER

## TYPICAL DETAILS OF GIRDER FLARE AT NORMAL OR RADIAL SUPPORTS – CONTINUOUS ENDS AS SHOWN (NON-CONTINUOUS ENDS SIMILAR EXCEPT AS OTHERWISE NOTED)

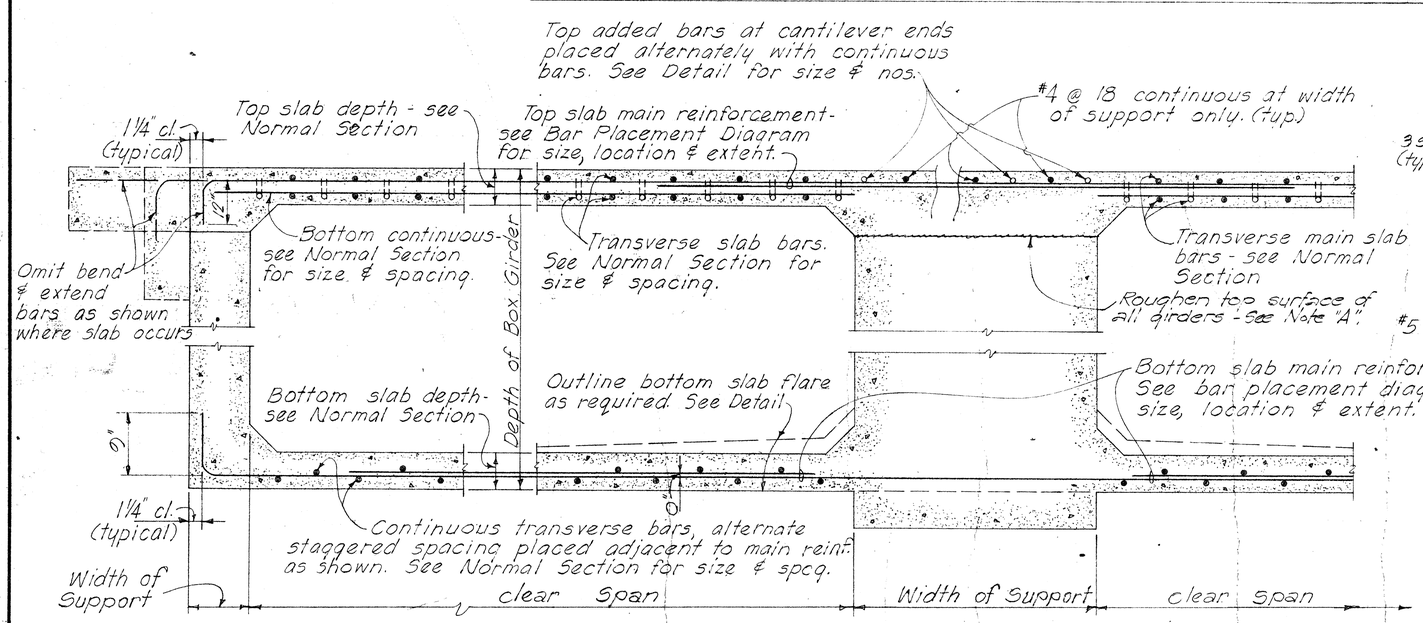


AT NON-CONTINUOUS END — AT CONTINUOUS SUPPORT

## TYPICAL LONGITUDINAL DECK SECTION ALONG GIRDER AT NORMAL OR RADIAL SUPPORTS

Note "A" The entire surface of the joint shall be thoroughly cleaned of surface laitance, curing compound, and other material foreign to the concrete and clean aggregate be exposed by abrasive blast cleaning after the curing period or immediately before placing concrete at the joint.

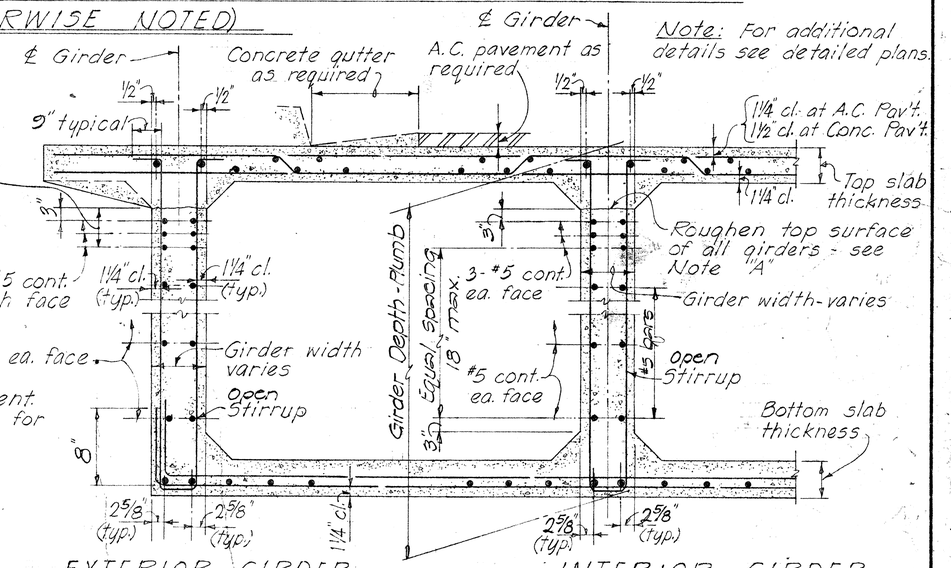


EXTERIOR GIRDER — INTERIOR GIRDER

## TYPICAL NORMAL BOX GIRDER SECTION

Note: For additional details see detailed plans.

| NO. | REVISION | APPROVED BY | DATE |
|---|---|---|---|
| | | | |

APPROVAL RECOMMENDED
Paul T. Yamashita — 1-23-70
BRIDGE DESIGN ENGINEER — DATE

APPROVED
Paul T. Yamashita — 1-28-70
For ASSISTANT CHIEF, ENGINEERING — DATE

STATE OF HAWAII
DEPARTMENT OF TRANSPORTATION
HIGHWAYS DIVISION

STANDARD DETAILS
CONCRETE BOX GIRDER

SHEET No. 15 OF 20 SHEETS DB-101-2

ORIGINAL PLAN — SURVEY PLOTTED BY — DRAWN BY — TRACED BY — DESIGNED BY — QUANTITIES BY — CHECKED BY — DATE — NOTE BOOK No.

PRINTED ON NO. 1000H CLEARPRINT

| FED. ROAD DIST. NO. | STATE | FED. AID PROJ. NO. | FISCAL YEAR | SHEET NO. | TOTAL SHEETS |
|---|---|---|---|---|---|
| HAWAII | HAW. | I-H2-1(8)6 | 1973 | 135 | 160 |

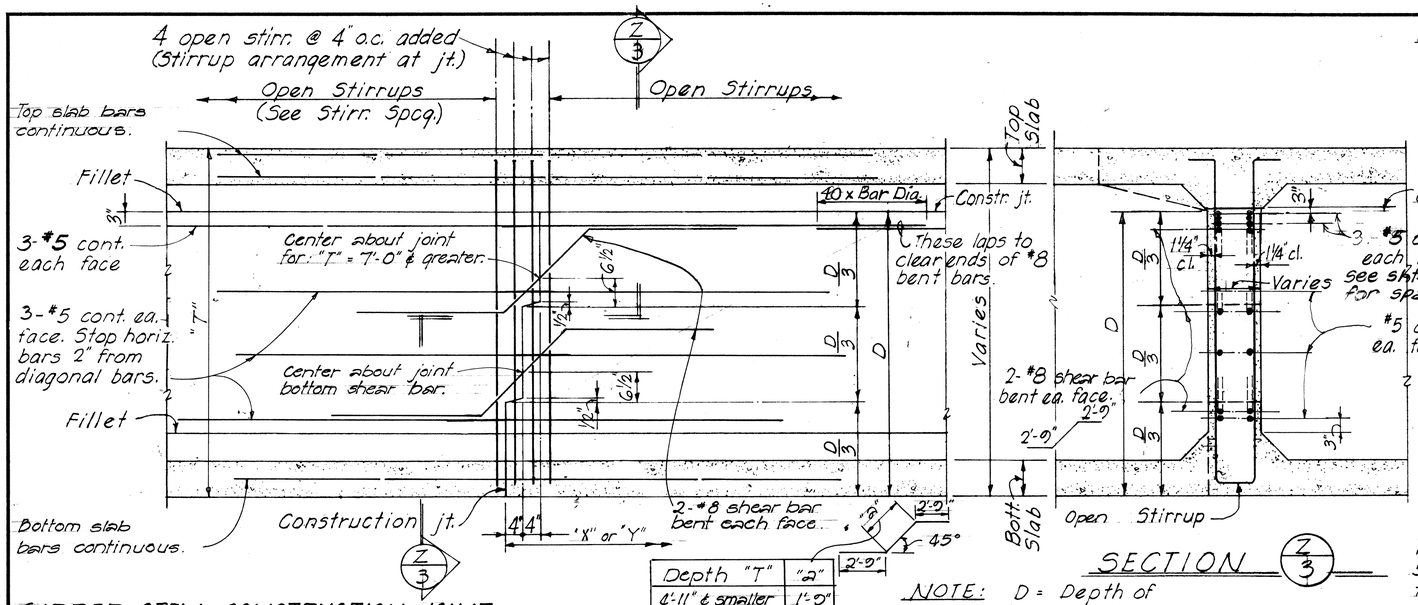


NOTE: D = Depth of girder stem to bott. of slab.

SECTION Z/3

## GIRDER STEM CONSTRUCTION JOINT

| Depth "T" | "2" |
|---|---|
| 4'-11" & smaller | 1'-0" |
| 5'-0" to 5'-11" | 2'-0" |
| 6'-0" to 6'-11" | 2'-3" |
| 7'-0" & greater | 3'-0" |

NOTE:
D = Depth of girder stem to bottom of slab.
S = Spacing of #5 cont. girder stem longitudinal bars.
For additional details see Normal Section of the Plans.

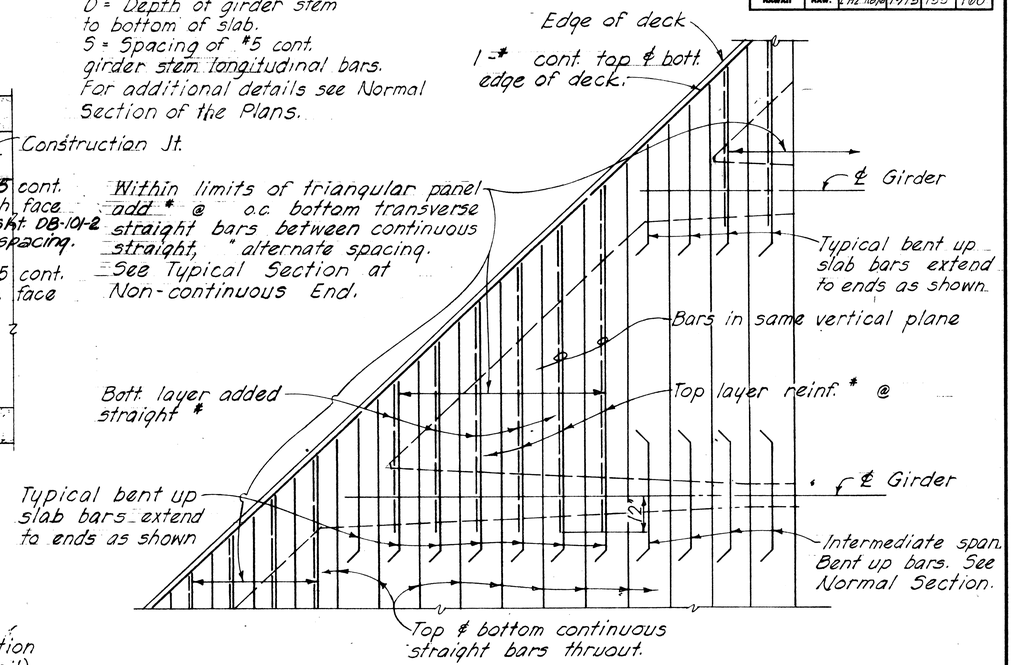


## PART PLAN - TYPICAL ARRANGEMENT OF TOP SLAB REINFORCEMENT AT SKEWED ENDS

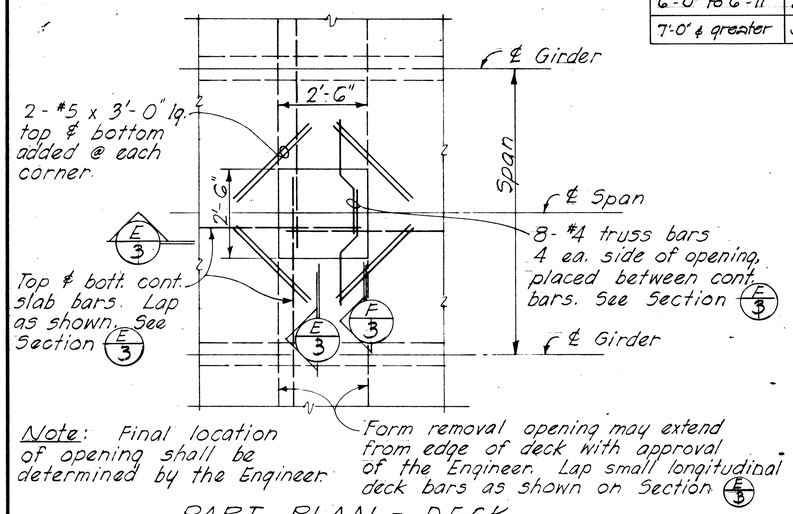


Note: Final location of opening shall be determined by the Engineer.

## PART PLAN - DECK SHOWING FORM REMOVAL OPENING

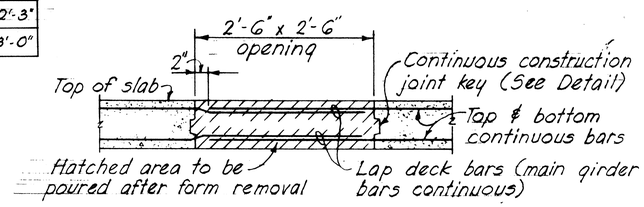


SECTION E/3

Note: Form removal opening at top slab shall not be located where main girder bars occur.

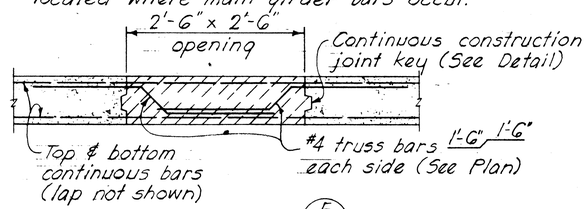


SECTION F/3

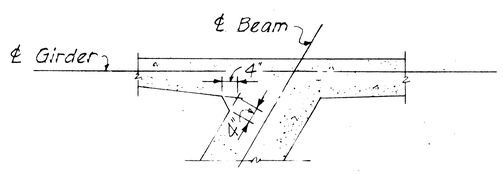


## TYPICAL DETAIL OF VERTICAL CHAMFER AT ACUTE INTERSECTION OF SKEWED CONCRETE MEMBER

APPROVAL RECOMMENDED:
Paul T. Yamashita — 1-23-70
BRIDGE DESIGN ENGINEER — DATE

APPROVED
Paul T. Yamashita — 1-28-70
For ASSISTANT CHIEF, ENGINEERING — DATE

| NO. | REVISION | APPROVED BY | DATE |
|---|---|---|---|
| | | | |

STATE OF HAWAII
DEPARTMENT OF TRANSPORTATION
HIGHWAYS DIVISION

STANDARD DETAILS
CONCRETE BOX GIRDER

SCALE AS NOTED

SHEET No. 16 OF 20 SHEETS DB-101-3

| ORIGINAL PLAN | SURVEY PLOTTED BY | DATE |
|---|---|---|
| | SURVEY BY | |
| | TRACED BY | |
| NOTE BOOK | DESIGNED BY | |
| | QUANTITIES BY | |
| No. | CHECKED BY | |

PRINTED ON NO. 1000H CLEARPRINT

| FED. ROAD DIST. NO. | STATE | FED. AID PROJ. NO. | FISCAL YEAR | SHEET NO. | TOTAL SHEETS |
|---|---|---|---|---|---|
| HAWAII | HAW. | I-H2-1(B)6 | 1973 | 136 | 160 |

## CURVE DATA

Δ = 40°06'25"
R = 10'
Lc = 7'

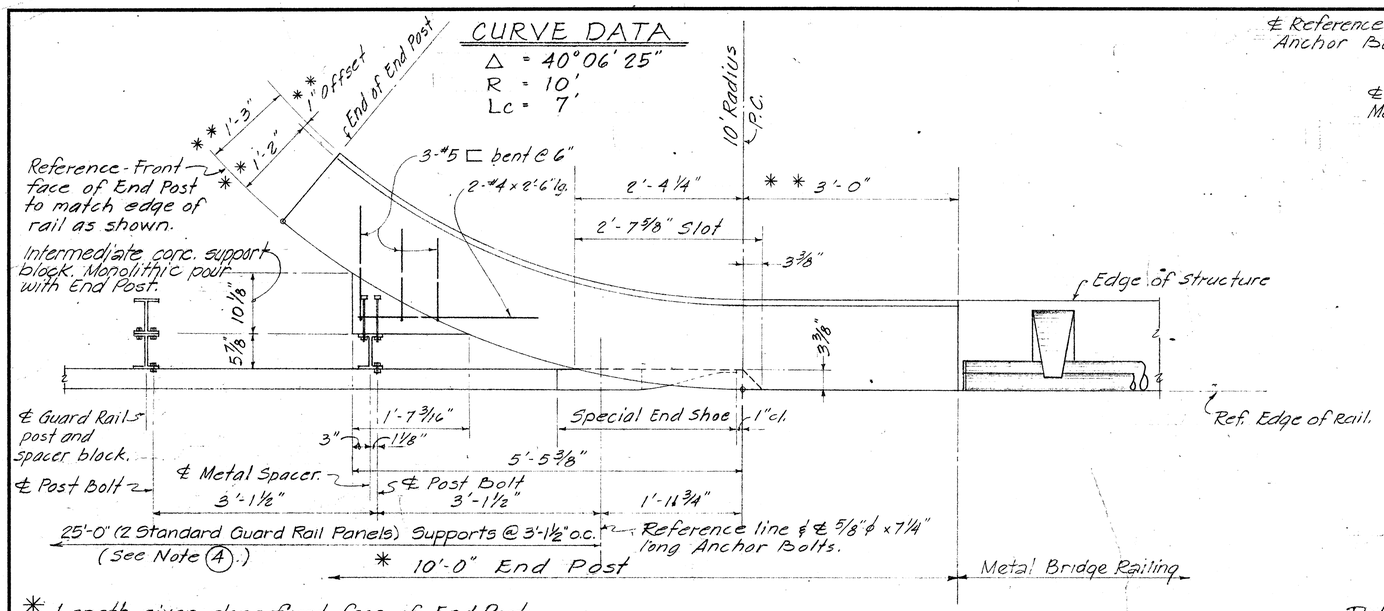


* Length given along front face of End Post.

## PLAN

Scale: 1" = 1'-0"

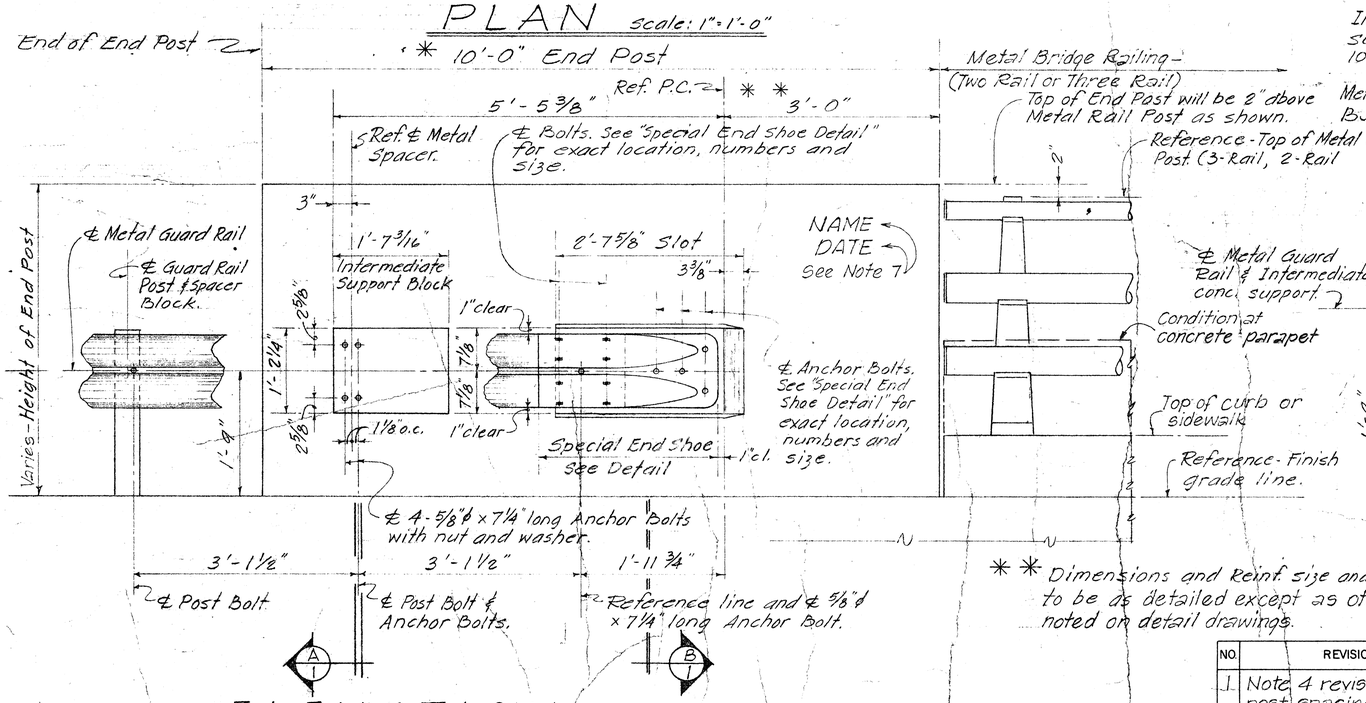


## ELEVATION

Scale: 1" = 1'-0"

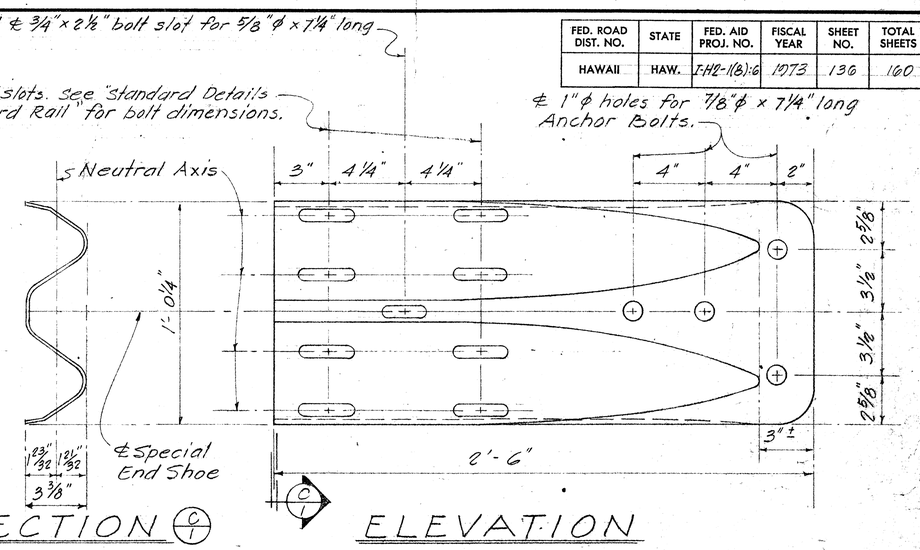


## SECTION C/1 — ELEVATION

## SPECIAL END SHOE DETAILS

Scale: 3" = 1'-0"

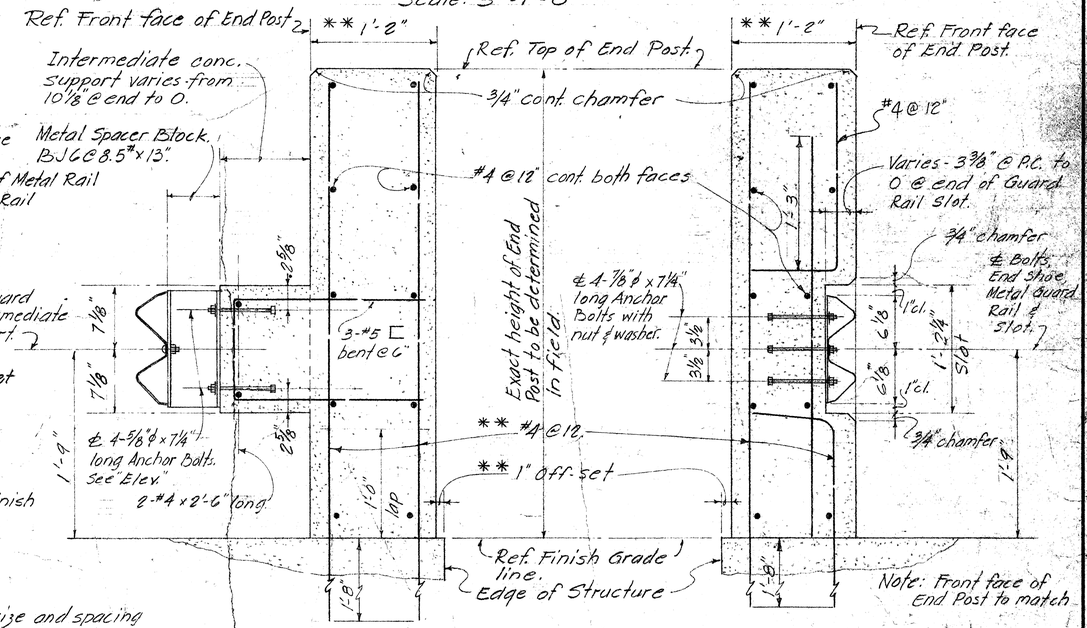


## SECTION A/1

Scale 1 1/8" = 1'-0"

## SECTION B/1

Scale 1 1/8" = 1'-0"

* * Dimensions and Reinf. size and spacing to be as detailed except as otherwise noted on detail drawings.

NOTES:

1. All Anchor Bolts shall be High Strength bolts conforming to the requirements of ASTM A-325.
2. All shoe assembly, including anchor bolts, nuts and washers, shall be galvanized.
3. Special End Shoe shall be Fabricated from 10 gage steel conforming to the requirements of AASHO 180.
4. First 25'-0" of guard rail adjoining "Special End Shoe" shall be galvanized steel.
5. Anchor Bolt length given under bolt head.
6. These details are applicable for Connections to Retaining walls also.
7. Place name of structure as shown. For location, see "Plan" on Contract Drawing. Date shown will be year structure is completed. Letter size and detail see standard Drawing DB-100.

| NO. | REVISION | APPROVED BY | DATE |
|---|---|---|---|
| 1. | Note 4 revised; 3'-1 1/2" post spacing extended to 25'-0". Note 7 added | H.T. | 2-27-72 |

APPROVAL RECOMMENDED: Paul T. Yamashita, BRIDGE DESIGN ENGINEER — DATE 1-23-70

APPROVED: Paul T. Yamashita, For ASSISTANT CHIEF ENGINEER — DATE 1-24-70

STATE OF HAWAII
DEPARTMENT OF TRANSPORTATION
HIGHWAYS DIVISION

STANDARD DETAILS
METAL GUARD RAIL CONNECTION AT VERTICAL FACE TYPE END POST

Scale: As shown

SHEET No. 17 OF 20 SHEETS DB-204

| ORIGINAL PLAN | | DATE |
|---|---|---|
| | SURVEY PLOTTED BY | |
| | DRAWN BY | |
| | TRACED BY | |
| | DESIGNED BY | |
| NOTE BOOK | QUANTITIES BY | |
| No. | CHECKED BY | |

K+E CRYSTALENE® LA 2920 TRACING PAPER

| FED. ROAD DIST. NO. | STATE | FED. AID PROJ. NO. | FISCAL YEAR | SHEET NO. | TOTAL SHEETS |
|---|---|---|---|---|---|
| HAWAII | HAW. | F-112-1(8)6 | 1973 | 197 | 160 |

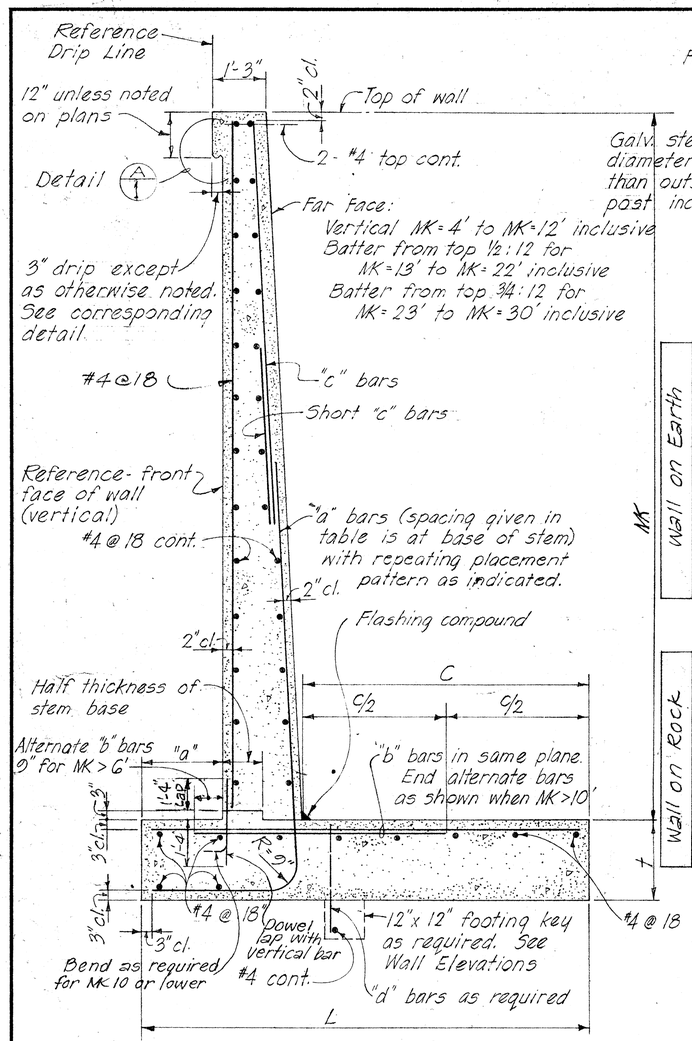


WALL SECTION

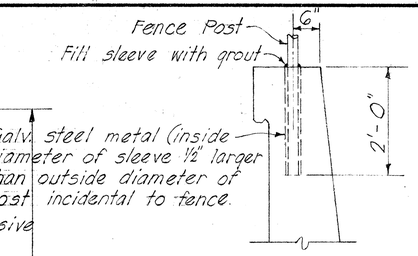


CHAIN LINK FENCE POST DETAIL

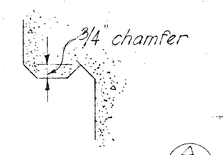


DETAIL A/1

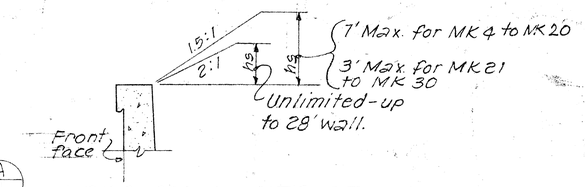


DESIGN LIMITS OF WALL SURCHARGE AND SLOPES

## SCHEDULE OF DIMENSIONS AND REINFORCING STEEL

Wall on Earth

| Maximum "MK" | 4E | 5E | 6E | 7E | 8E | 9E | 10E | 11E | 12E | 13E | 14E | 15E | 16E | 17E | 18E | 19E | 20E | 21E | 22E | 23E | 24E | 26E | 28E | 30E |
|---|---|---|---|---|---|---|---|---|---|---|---|---|---|---|---|---|---|---|---|---|---|---|---|---|
| a | 6" | 6" | 6" | 12" | 12" | 12" | 12" | 12" | 12" | 12" | 15" | 18" | 21" | 24" | 24" | 24" | 27" | 30" | 33" | 36" | 39" | 54" | 60" | 72" |
| t | 14" | 14" | 14" | 14" | 14" | 14" | 14" | 18" | 18" | 18" | 18" | 18" | 21" | 21" | 24" | 24" | 24" | 27" | 30" | 31" | 33" | 36" | 39" | 42" |
| L | 2.5' | 3.0' | 3.5' | 4.0' | 4.5' | 5.0' | 5.5' | 6.0' | 6.5' | 7.0' | 7.75' | 8.25' | 9.0' | 9.75' | 10.5' | 11.5' | 12.5' | 13.5' | 14.5' | 15.25' | 16.0' | 18.0' | 20.0' | 21.0' |
| "a" bars | #3@12" | #3@12" | #4@12" | #4@9" | #4@5½" | #5@7" | #6@7" | #6@6" | #6@5" | #7@9" | #6@5½" | #7@6" | #8@6" | #8@5¾" | #9@6" | #9@6" | #10@6" | #10@6" | #10@5½" | #10@6" | #10@5¾" | #11@6" | #11@5" | #11@4½" |
| "b" bars | #3@12" | #3@12 | #3@12" | #3@9" | #4@11" | #4@7" | #5@7" | #5@6" | #5@5" | #7@9" | #6@5½" | #7@6" | #8@6" | #7@5¾" | #8@6" | #9@6" | #10@6" | #10@6" | #10@5½" | #10@6" | #10@5¾" | #11@6" | #11@5" | #11@4½" |
| "c" bars | | | | | | | | #4 | #4 | #4 | #4 | #4 | #5 | #5 | #5 | #6 | #6 | #6 | #7 | #7 | #7 | #7 | #7 | #7 |
| "d" bars | #3@12" | #3@12" | #3@12" | #3@12" | #4@18" | #4@15" | #4@15" | #4@12" | #4@11" | #4@9" | #5@12" | #5@12" | #5@10" | #5@9" | #5@9" | #5@8" | #6@10" | #6@9" | #7@12" | #7@11" | #7@10" | #7@ | #7@ | #7@6" |

Wall on Rock

| Maximum "MK" | 4R | 5R | 6R | 7R | 8R | 9R | 10R | 11R | 12R | 13R | 14R | 15R | 16R | 17R | 18R | 19R | 20R | 21R | 22R | 23R | 24R | 26R | 28R | 30R |
|---|---|---|---|---|---|---|---|---|---|---|---|---|---|---|---|---|---|---|---|---|---|---|---|---|
| a | 6" | 6" | 6" | 12" | 12" | 12" | 12" | 12" | 12" | 12" | 15" | 18" | 21" | 21" | 21" | 21" | 24" | 24" | 27" | 30" | 33" | 39" | 39" | 51" |
| t | 14" | 14" | 14" | 14" | 14" | 14" | 14" | 18" | 18" | 18" | 18" | 18" | 18" | 18" | 18" | 21" | 21" | 21" | 21" | 24" | 24" | 27" | 30" | 36" |
| L | 2.5' | 3.0' | 3.5' | 4.0 | 4.5' | 5.0' | 5.5' | 6.0' | 6.5' | 6.75 | 7.25' | 7.75 | 8.25' | 8.75' | 9.25' | 9.75' | 10.25' | 10.5' | 11.0' | 11.5' | 12.0' | 13.0' | 14.0' | 15.0' |
| "a" bars | #3@12" | #3@12" | #4@12" | #4@9" | #4@5½" | #5@6" | #6@7" | #6@6" | #6@5" | #7@9" | #6@5½" | #7@6" | #8@6" | #8@6" | #9@6" | #9@6" | #10@6" | #10@6" | #10@5½" | #10@6" | #10@5¾" | #11@6" | #11@5" | #11@4½" |
| "b" bars | #3@12" | #3@12" | #3@12" | #3@9" | #4@11" | #4@6" | #5@7" | #5@6" | #5@5" | #7@9" | #6@5½" | #7@6" | #7@6" | #8@6" | #9@6" | #9@6" | #10@6" | #10@6" | #10@5½" | #10@6" | #10@5¾" | #10@6" | #10@5" | #9@4½" |
| "c" bars | | | | | | | | #4 | #4 | #4 | #4 | #4 | #5 | #5 | #5 | #6 | #6 | #6 | #7 | #7 | #7 | #7 | #7 | #7 |
| "d" bars | #3@12" | #3@12" | #3@12" | #3@12" | #4@18" | #4@15" | #4@15" | #4@12" | #4@11" | #4@9" | #5@12" | #5@12" | #5@10" | #5@9" | #5@9" | #5@8" | #6@10" | #6@9" | #7@12" | #7@11" | #7@10" | #7@ | #7@ | #7@6" |

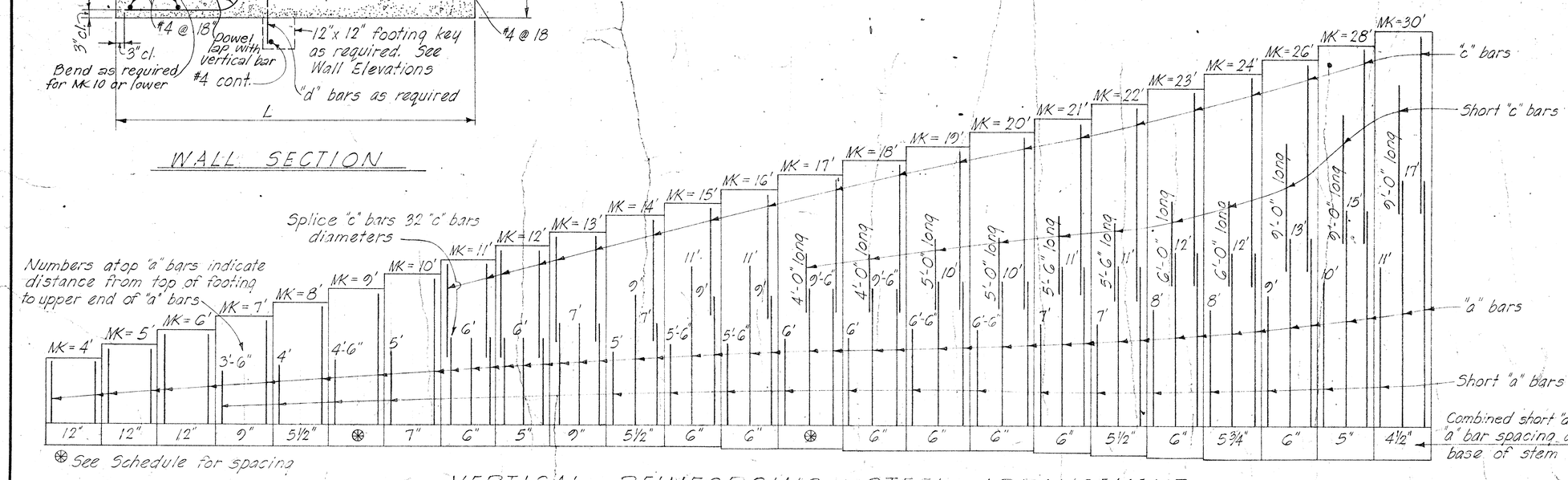


⊛ See Schedule for spacing

VERTICAL REINFORCING STEEL ARRANGEMENT

| NO. | REVISION | APPROVED BY | DATE |
|---|---|---|---|
| | | | |

APPROVAL RECOMMENDED
Paul T. Yamashita — 1-23-70
BRIDGE DESIGN ENGINEER — DATE

APPROVED
For Paul T. Yamashita — 1-28-70
For ASSISTANT CHIEF, ENGINEERING — DATE

STATE OF HAWAII
DEPARTMENT OF TRANSPORTATION
HIGHWAYS DIVISION

STANDARD DETAILS

RETAINING WALL TYPE T-1

SCALE AS NOTED

SHEET No. 18 OF 20 SHEETS DB-207-1

| ORIGINAL PLAN | | DATE |
|---|---|---|
| | SURVEY PLOTTED BY | |
| | DRAWN BY | |
| | TRACED BY | |
| | DESIGNED BY | |
| NOTE BOOK | QUANTITIES BY | |
| No. | CHECKED BY | |

PRINTED ON NO. 1000H CLEARPRINT

| FED. ROAD DIST. NO. | STATE | FED. AID PROJ. NO. | FISCAL YEAR | SHEET NO. | TOTAL SHEETS |
|---|---|---|---|---|---|
| HAWAII | HAW. | IM-H-1(8)46 | 1973 | 138 | 160 |

NOTE:
Spacing of joints
Expansion = 96'-0" max.
Contraction = 32'-0" max.

For alternate contraction joint and control joint details - See Standard Details Sht. #DB-100

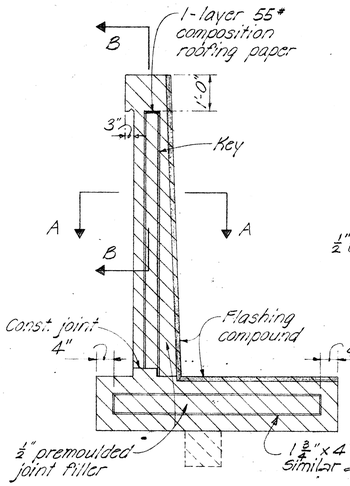


JOINT ELEVATION

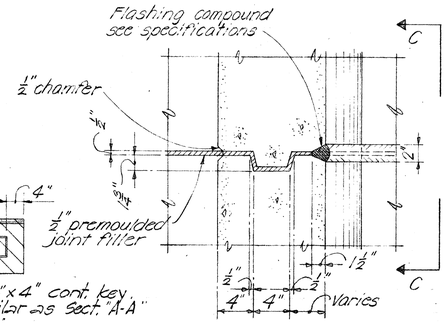


SECTION A-A

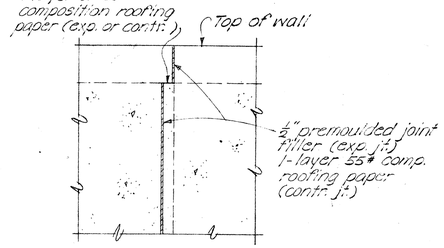


SECTION B-B

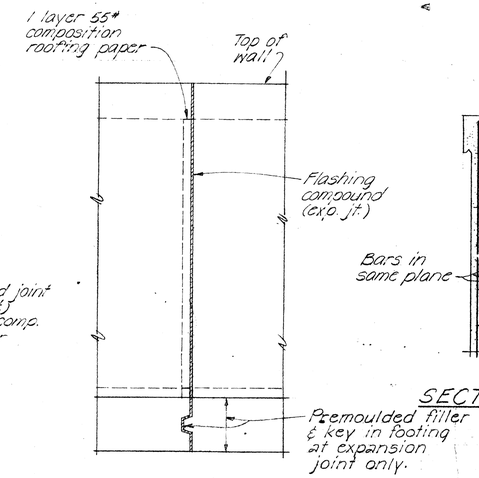


SECTION C-C

TYPICAL EXPANSION JOINT DETAILS No Scale

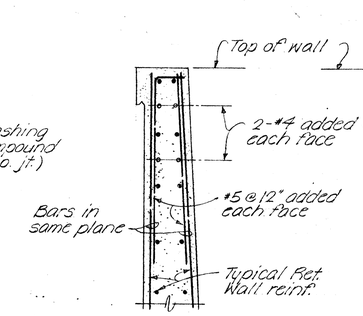


SECTION D-D

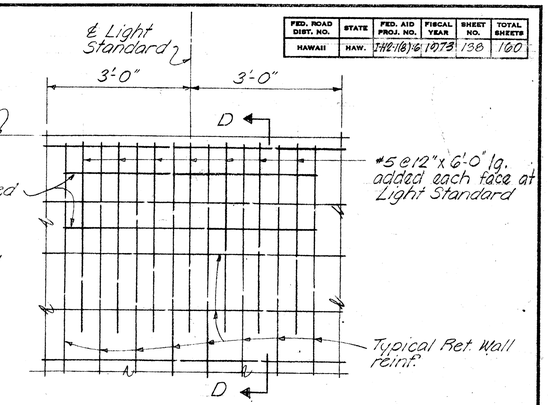


ELEVATION

TYPICAL ADDED REINFORCEMENT AT LIGHT STANDARD BASE No Scale

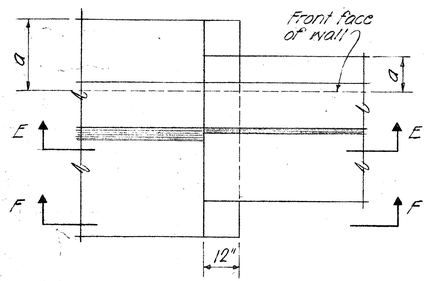


PLAN

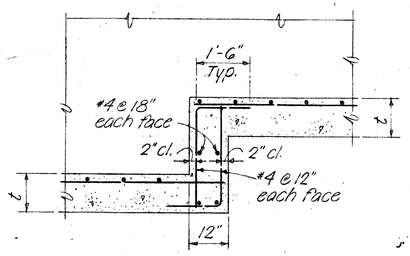


SECTION E-E

AT CONTINUOUS FOOTING

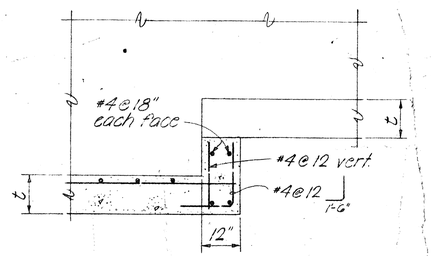


SECTION F-F

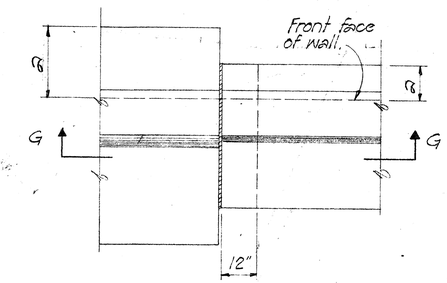


PLAN

AT EXPANSION JOINT

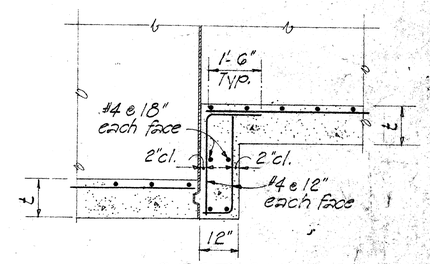


SECTION G-G

TYPICAL FOOTING STEP-UP DETAILS No Scale

NOTE
Hatched areas denote limits of structural excavation pay line. All other excavation shall be roadway excavation except as otherwise noted.

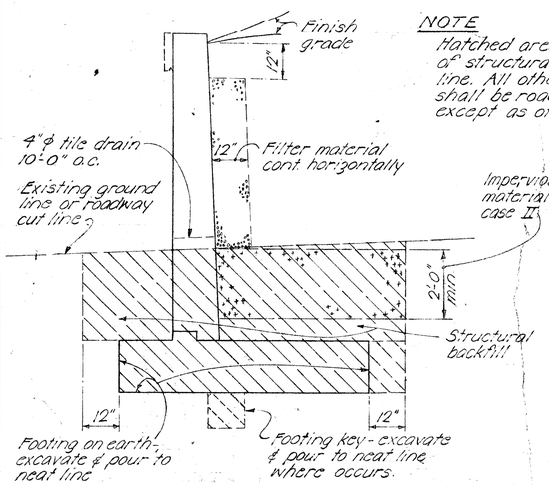


CASE I

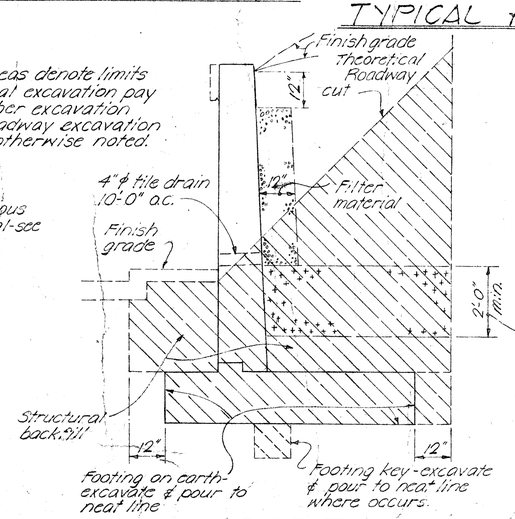


CASE II

Impervious material as selected by the Engineer incidental to structural excavation.
The subgrade upon which filter material is to be placed shall be made as impervious as possible by pneumatic tamping or other approved methods.
Impervious material shall be incidental to roadway excavation or imported borrow when used in embankment area.

STRUCTURAL EXCAVATION & DRAINAGE DETAILS No Scale

| NO | REVISION | APPROVED BY | DATE |
|---|---|---|---|
| 1 | Change note spacing of joints. | H.F. | 2-4-72 |

APPROVAL RECOMMENDED:
Paul T. Yamashita — 1-23-70
BRIDGE DESIGN ENGINEER — DATE

APPROVED
Paul T. Yamashita — 1-28-70
For ASSISTANT CHIEF ENGINEER — DATE

STATE OF HAWAII
DEPARTMENT OF TRANSPORTATION
HIGHWAYS DIVISION

STANDARD DETAILS
RETAINING WALL TYPE T-1

SCALE AS NOTED

SHEET No. 10 OF 20 SHEETS DB-207-2

| ORIGINAL PLAN | SURVEY PLOTTED BY | DATE |
|---|---|---|
| | DRAWN BY | |
| | TRACED BY | |
| NOTE BOOK | DESIGNED BY | |
| No. | QUANTITIES BY | |
| | CHECKED BY | |

PRINTED ON NO. 1000H CLEARPRINT

| FED. ROAD DIST. NO. | STATE | FED. AID PROJ. NO. | FISCAL YEAR | SHEET NO. | TOTAL SHEETS |
|---|---|---|---|---|---|
| HAWAII | HAW. | I-H2-1(8):6 | 1973 | 139 | 160 |

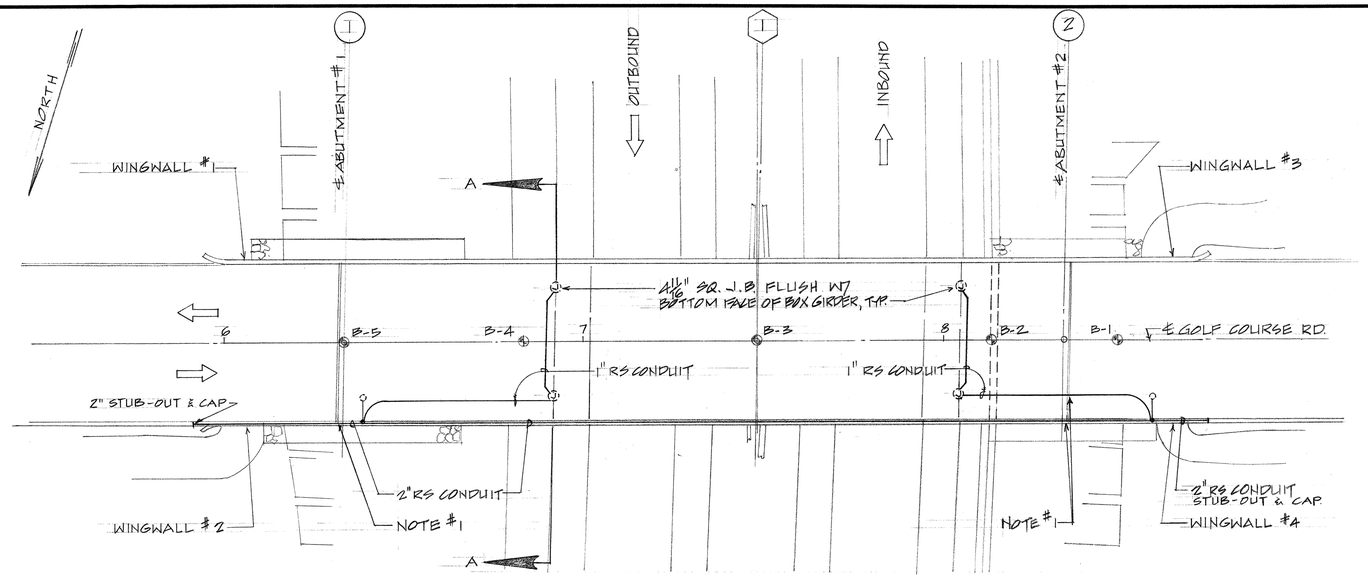


LIGHTING PLAN

SCALE: 1" = 20'-0"

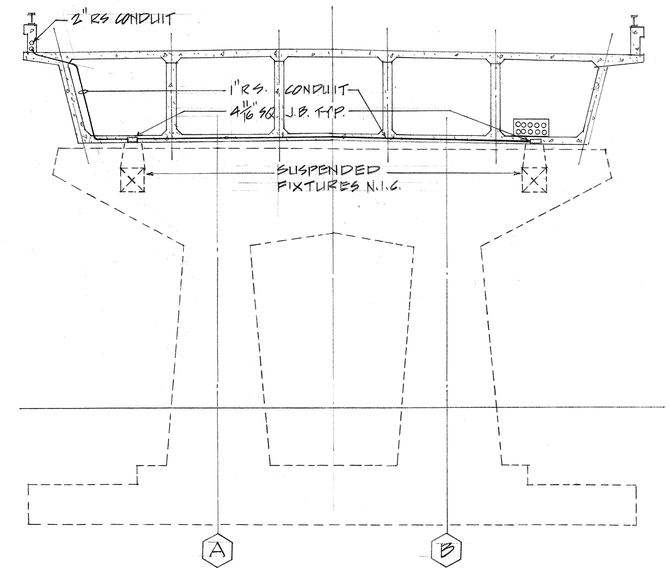


NORMAL SECTION "A-A"

SCALE: 3/16" = 1'-0"

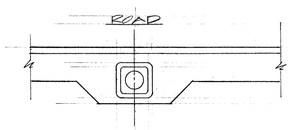


PLAN

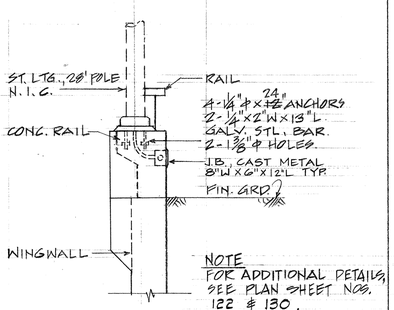


SECTION

WING WALL

SCALE: 1/2" = 1'-0"

NOTES:

1. GRADE SEPARATION ABUTMENT, PROVIDE EXP. COUPLING AT EACH CONDUIT.
2. SEE STRUCTURAL DRAWINGS FOR CONCRETE PORTION OF WORK.
3. SEE PLAN SHEET NO. 64 FOR ADDITIONAL HWY LIGHTING DETAILS.

STATE OF HAWAII
DEPARTMENT OF TRANSPORTATION
HIGHWAYS DIVISION

GOLF COURSE SEPARATION

STA. 6+32.81 TO STA. 8+34.31

LIGHTING PLAN

LEILEHUA INTERCHANGE
F.A.I. PROJ. NO. I-H2-1(8):6 DATE: APR., '73

SHEET No. 20 OF 20 SHEETS

| ORIGINAL PLAN | SURVEY PLOTTED BY | DATE |
|---|---|---|
| | DRAWN BY | |
| | TRACED BY | |
| NOTE BOOK | DESIGNED BY | |
| | QUANTITIES BY | |
| No. | CHECKED BY | |

PRINTED ON NO. 1000H CLEARPRINT

412