FED. ROAD DIST. NO.	STATE	FED. AID PROJ. NO.	FISCAL YEAR	SHEET NO.	TOTAL SHEETS
HAWAII	HAW.	S-0990(2)	62-63	7	19

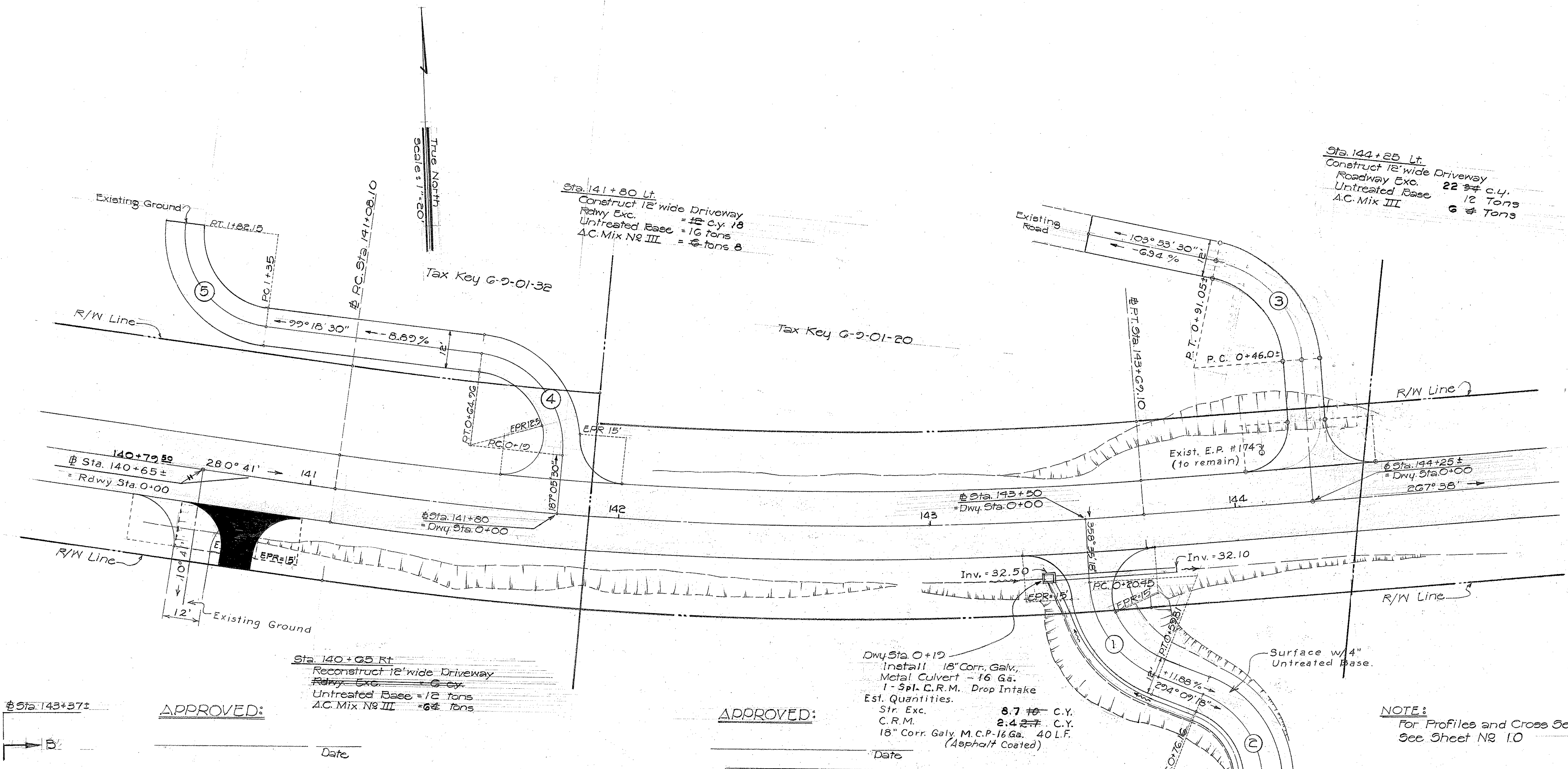
True North
Scale: 1"=20'
Existing Ground
P.T. 1+82.15
P.C. 1+35
℄ P.C. Sta. 141+08.10
Tax Key 6-9-01-32
Tax Key 6-9-01-20
R/W Line
99° 18' 30"
8.89 %
12'
R.T. 0+64.96
P.C. 0+19
EPR 12.5'
EPR 15'
187° 05' 30"
140+79.50
℄ Sta. 140+65 ±
= Rdwy. Sta. 0+00
280° 41'
141
142
143
144
℄ Sta. 141+80
= Dwy. Sta. 0+00
EPR = 15'
10'
12'
Existing Ground
Existing Road
103° 53' 30"
6.94 %
℄ P.T. Sta. 143+69.10
P.T. 0+91.05
P.C. 0+46.0 ±
Exist. E.P. # 174
(to remain)
℄ Sta. 144+25 ±
= Dwy. Sta. 0+00
267° 38'
℄ Sta. 143+50
= Dwy. Sta. 0+00
358° 35' 18"
Inv. = 32.50
Inv. = 32.10
EPR = 15'
P.C. 0+20.45
P.T. 0+52.51
11.88 %
294° 09' 18"
P.C. 0+76.15
P.T. 1+12.96
Surface w/ 4" Untreated Base.
Exist'g Gate

Sta. 141 + 80 Lt.
Construct 12' wide Driveway
Rdwy. Exc. = ~~12~~ c.y. 18
Untreated Base = 16 tons
A.C. Mix No III = ~~6~~ tons 8

Sta. 144 + 25 Lt.
Construct 12' wide Driveway
Roadway Exc. 22 ~~34~~ c.y.
Untreated Base 12 Tons
A.C. Mix III 6 ~~4~~ Tons

Sta. 140 + 65 Rt
Reconstruct 12' wide Driveway
~~Rdwy. Exc. = 6 c.y.~~
Untreated Base = 12 tons
A.C. Mix No III = 6 ~~4~~ tons

Dwy. Sta. 0 + 19
Install 18" Corr., Galv., Metal Culvert - 16 Ga.
1 - Spl. C.R.M. Drop Intake
Est. Quantities.
Str. Exc. 8.7 ~~10~~ C.Y.
C.R.M. 2.4 ~~2.7~~ C.Y.
18" Corr. Galv. M.C.P-16 Ga. 40 L.F.
(Asphalt Coated)

APPROVED:

Date

APPROVED:

Date

NOTE:
For Profiles and Cross Sections of Driveways See Sheet No 10

Sta. 143 + 50 Rt.
Construct 12' wide Driveway
Rdwy. Exc. = 229 ~~232~~ c.y.
Untreated Base = 35 tons
A.C. Mix No III = 10 ~~8~~ tons

CURVE DATA

	①	②	③	④	⑤
Δ	64° 26' 00"	70° 11' 55"	73° 44' 30"	87° 47' 00"	90° 00' 00"
Δ/2	32° 13' 00"	35° 05' 57.5"	36° 52' 15"	43° 53' 30"	45° 00' 00
R	35.00	30.00	35.00	30.00	30.00
T	22.05	21.08	26.25	28.86	30.00
C	37.32	34.50	42.00	41.60	42.43
L	39.36	36.76	45.05	45.96	47.12
S.E.	10 % Max.				

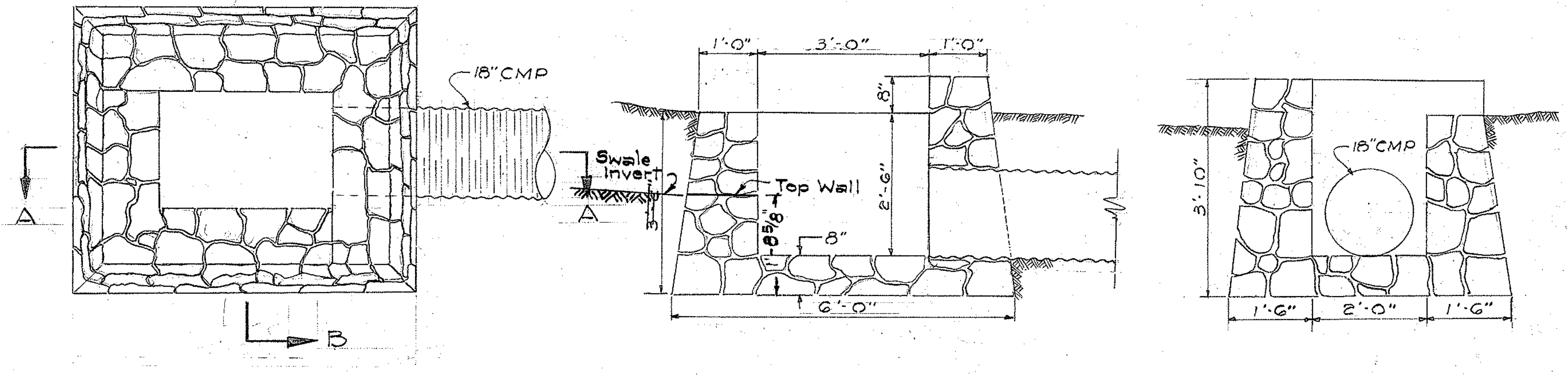
℄ Sta. 143+37 ±
B
A
18" CMP
Swale Invert
2
3
Top Wall
1'-0"
3'-0"
1'-0"
8"
2'-6"
8 5/8"
8"
6'-0"
3'-10"
18" CMP
1'-6"
2'-0"
1'-6"

PLAN

SECTION "A-A"

SECTION "B-B"

DETAIL OF SPECIAL C.R.M. DROP INTAKE

Scale: 1/2" = 1'-0"

ORIGINAL PLAN
NOTE BOOK
No.
SURVEY PLOTTED BY ______ DATE
DRAWN BY ______ "
TRACED BY ______ "
DESIGNED BY ______ "
QUANTITIES BY ______ "
CHECKED BY ______ "

STATE OF HAWAII
DEPARTMENT OF TRANSPORTATION
HIGHWAYS DIVISION

PROPOSED DRIVEWAYS

AT STA. 140+65± RT., 141+80 LT.,
143+50 RT., & 144+25± LT.
PROJECT No S-0990(2)

Scale: 1" = 20'

SHEET No. OF SHEETS

PRINTED ON CLEARPRINT 1000-H

FED. ROAD DIST. NO.	STATE	FED. AID PROJ. NO.	FISCAL YEAR	SHEET NO.	TOTAL SHEETS
HAWAII	HAW.	S-0990(2)	1962-'63	8	19

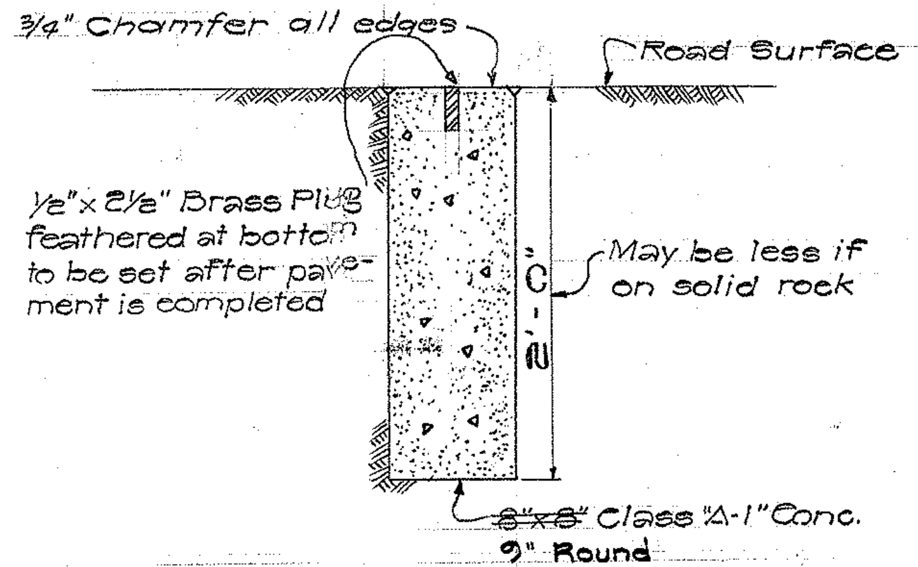

3/4" Chamfer all edges
Road Surface
1/2"x 2 1/2" Brass Plug feathered at bottom to be set after pavement is completed
May be less if on solid rock
2'-0"
~~8"x8"~~ Class "A-1" Conc.
9" Round

CENTER LINE MONUMENT

Scale: 1"=1'-0"

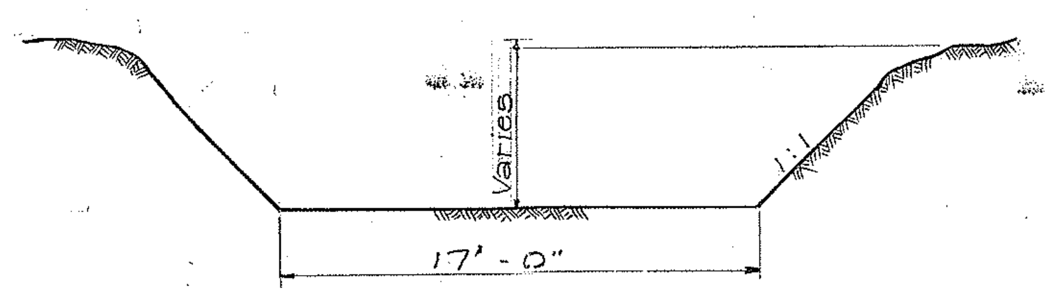

Varies
1:1
17'-0"

TYPICAL SECTION OF OUTFALL CHANNEL

Not to Scale

CAMP ERDMAN
Y. M. C. A. Office
Sta. 168+50 left
Construct 12' Driveway
Est. Quant.
Untreated Base 13 tons
A.C. Mix III 4.86 tons
Install Salvaged 24" RCCP under Driveway 48 l.f.
Structure Exc 40.2 ~~48~~ c.y.
Installed 168 L.F. of 24" Cl. III Reinf. Conc. Culv't Pipe.
Constructed CRM Drop Intake 50 c.y.
IRON WOOD TREES
Inv.= 11.63
Inv.= 11.52
Wooden Fence with CRM Posts
R/W Line
3/4" Pipe
12'
Ditch P.I. 168+00
24" Conc. Pipe
276° 11' 46"
120 L.F.
CRM D.I.
Ditch P.I. 170+00
272° 36' 48"
48 L.F.
169+93.21
186° 11' 46"
168+72±
168
169
170
171
172
173
174
Rdwy ℄ Sta. 168+50± = Driveway Sta. 0+00
Rdwy ℄ Sta. 168+69± = Driveway Sta. 0+00
Inv.= 11.57
Inv.= 11.49
Flow
11° 11' 46"
El. = 15.78
El. = 15.78
El. = 9.45
El. = 9.45
El. = 15.39
Inv.= 10.00
Inv.= 10.90
Excavate Channel as necessary for Drainage
Demolish Existing Loose Rock Headwall
276° 11' 46"
2" Pipeline
Waterline Abandoned
Sta. 171+00±
Remove existing 36" Culvert, Demolish Headwalls, Install (3) 48" Culvert & 2 CRM Headwalls.
Est. Quant. (See Sht. No 6)
True North
Scale: 1"=20'
Existing Road to Beach (Abandon)
Sta. 174+13.91
Construct Driveway
Est. Quant.
Untreated Base 12 tons
A.C. Mix III 5.0 tons
Existing Road to Beach
10'
Ag. determine in field
186° 11' 46"
E.P.R.=15'
E.P.R.=15'
Rdwy ℄ P.C. Sta. 174+09.53 = Dwy. Sta. 0+00
Transition Ditch to Swale
(See Cross Sections)
173+00
174+00

Driveway Sta. 0+28±
Install 48" C.G.M.C.P.
1-Special Headwall (See detail this sheet)
Est. Quant.
Struc. Exc. 51.7 ~~58~~ c.y.
C.R.M. 4.9 ~~4.7~~ c.y.
~~48" Corr. Galv. Metal Culvert Pipe (12 ga.) (Asphalt Coated)~~ or 48" Cl. III R.C.C.P. 32 l.f.

Sta. 168+69± Right
Construct 12 ft. Driveway
Est. Quant.
Untreated Base 15 tons
A.C. Mix III ~~5.3~~ 8 tons

GLOBE WIRELESS LTD.

DETAIL FOR MULTIPLE BARREL HEADWALL							
No.	D	D'	L	X	H	D/2+1'-0"	Y
1	36"	44"	10'-6"	5' 3"	5'-0"	2'-6"	—
2	36"	44"	15'-8"	5'-3"	5'-0"	2'-6"	1'-6"
2	48"	58"	20'-4"	*6'-9"	6'-6"	3'-0"	*2'-0"
3	48"	58"	27-2"	6'-9"	6'-6"	3'-0"	2'-0"

*Note:
"X" & "Y" dimensions shall be determined in the field to conform to existing Twin-Barrel Culvert at Sta. 198+37±

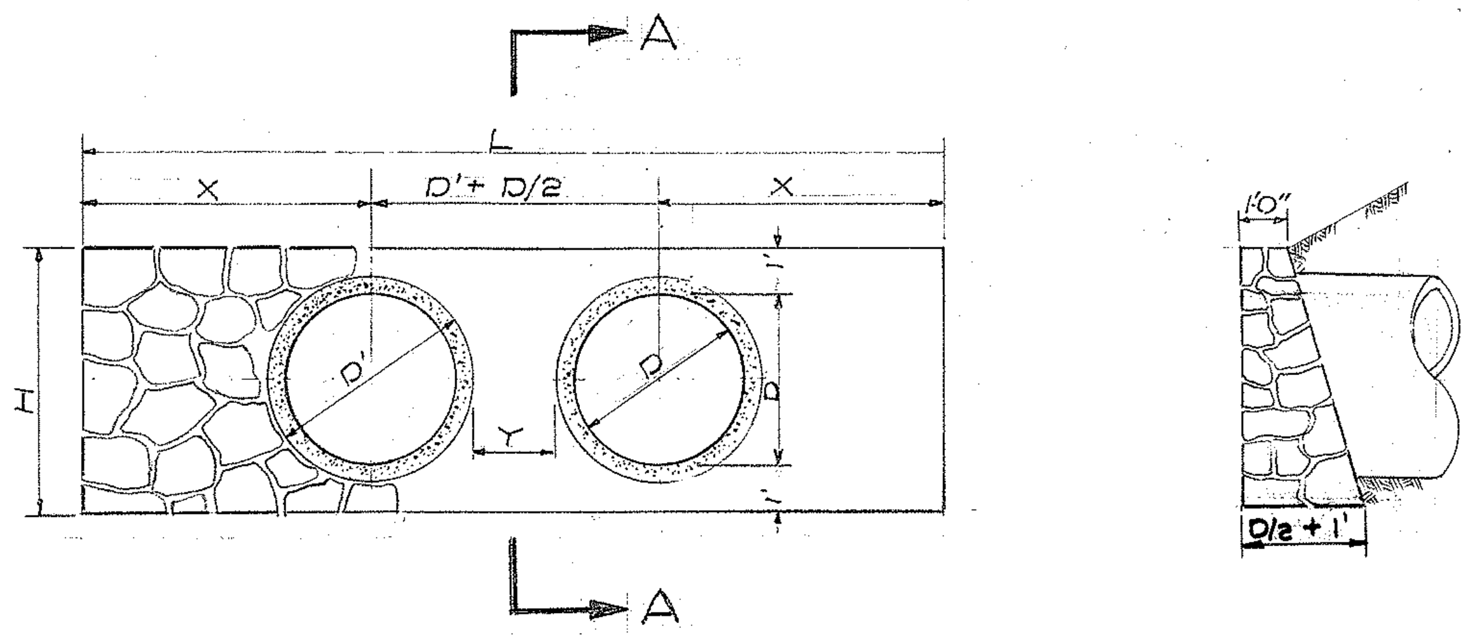

A
L
X
D'+D/2
X
H
D'
D
Y
A
1'0"
D/2+1'

ELEVATION

SECTION "A-A"

TYPICAL HEADWALL FOR MULTIPLE CULVERTS

Scale: None

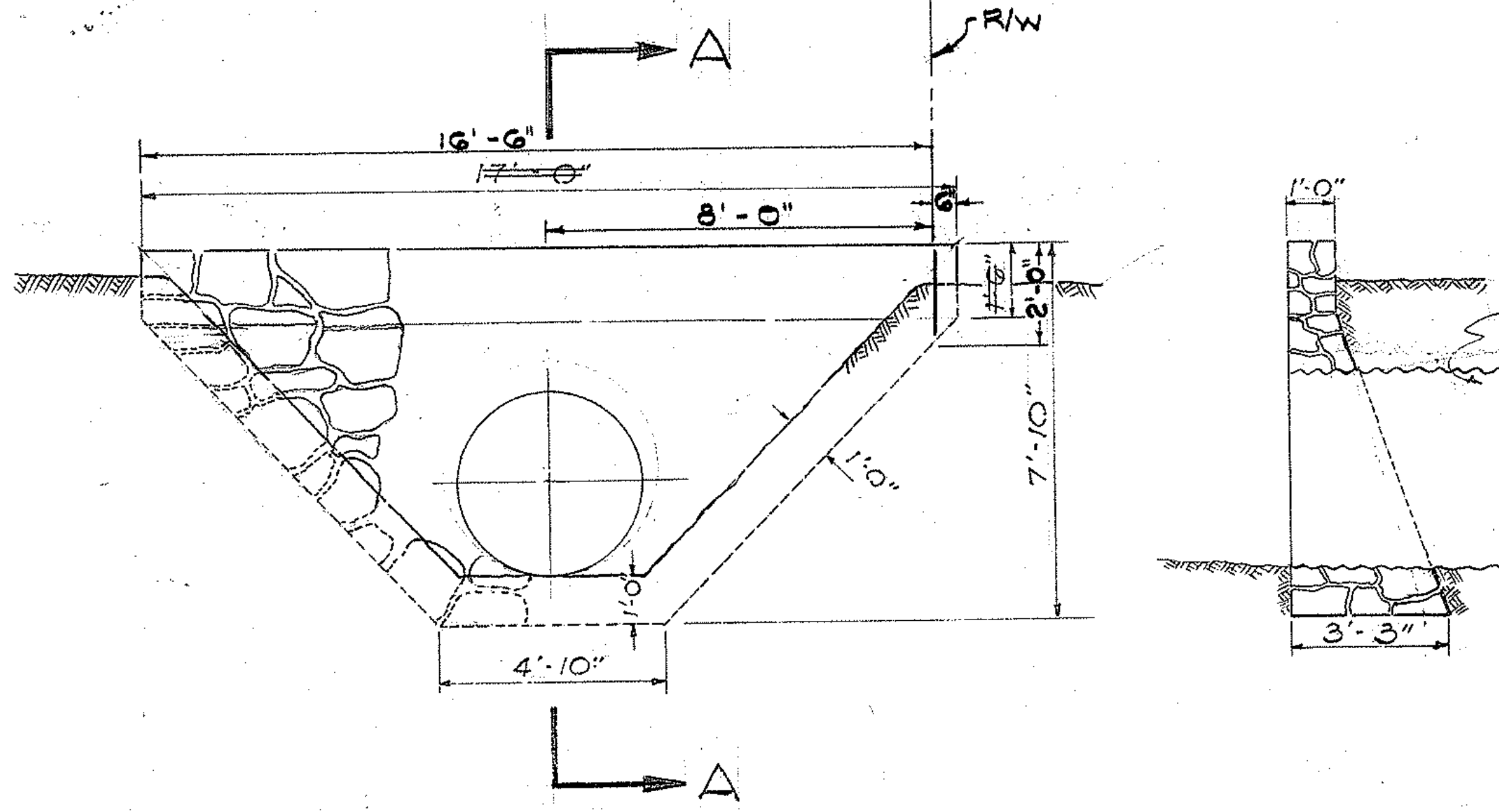

A
R/W
16'-6"
~~17'-0"~~
8'-0"
6"
~~1'-6"~~
2'-0"
7'-10"
1'-0"
1'-0"
4'-10"
A
1'-0"
~~48" CMP or~~
48" Cl. III RCCP
3'-3"

ELEVATION

SECTION "A-A"

DETAIL FOR SPECIAL CRM HEADWALL

Scale: 1/4"=1'-0"

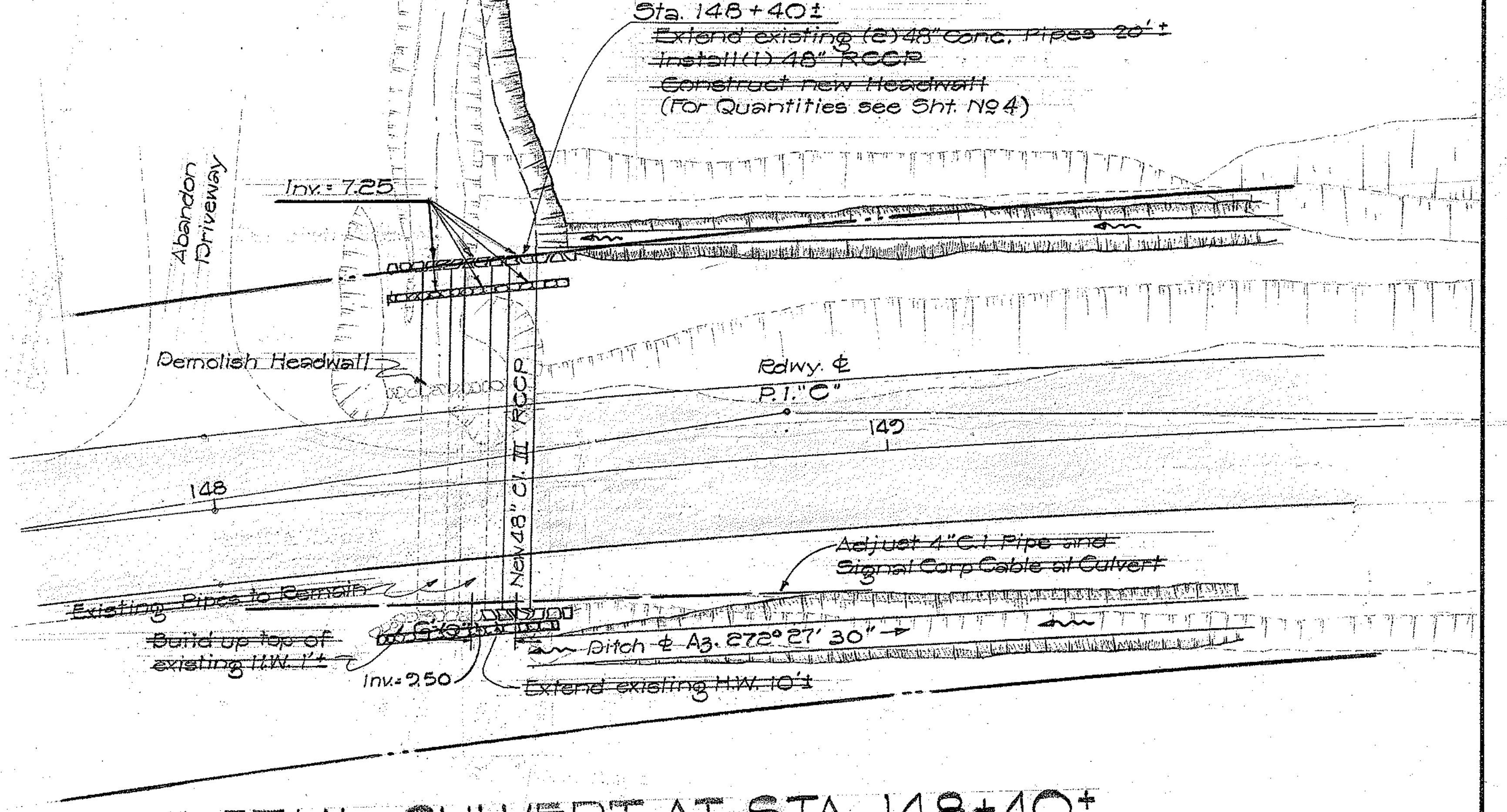

Sta. 148+40±
~~Extend existing (2) 48" Conc. Pipes 20'±~~
~~Install (1) 48" RCCP~~
~~Construct new Headwall~~
(For Quantities see Sht. No 4)
Abandon Driveway
Inv.= 7.25
Demolish Headwall
Rdwy. ℄
P.I. "C"
149
148
New 48" Cl. III RCCP
~~Adjust 4" C.I. Pipe and Signal Corp Cable at Culvert~~
~~Existing Pipes to Remain~~
~~Build up top of existing H.W. 1'±~~
Inv.= 9.50
Ditch ℄ Ag. 272° 27' 30"
~~Extend existing H.W. 10'±~~

DETAIL - CULVERT AT STA. 148+40±

Scale: 1"=20'-0"

STATE OF HAWAII
DEPARTMENT OF TRANSPORTATION
HIGHWAYS DIVISION

DETAIL OF
DRAINAGE - DRIVEWAY
& CENTERLINE MONUMENT
PROJECT No S-0990(2)

Scale: As Noted March 1963

SHEET No. OF SHEETS

ORIGINAL PLAN	SURVEY PLOTTED BY ______ DATE ______
	DRAWN BY ______ " ______
	TRACED BY ______ " ______
NOTE BOOK	DESIGNED BY ______ " ______
	QUANTITIES BY ______ " ______
No. ______	CHECKED BY ______ " ______

PRINTED ON CLEARPRINT 1000-H

FED. ROAD DIST. NO.	STATE	FED. AID PROJ. NO.	FISCAL YEAR	SHT NO.	TOTAL SHEET
HAWAII	HAW.	S-0990(2)	62-63	9	19

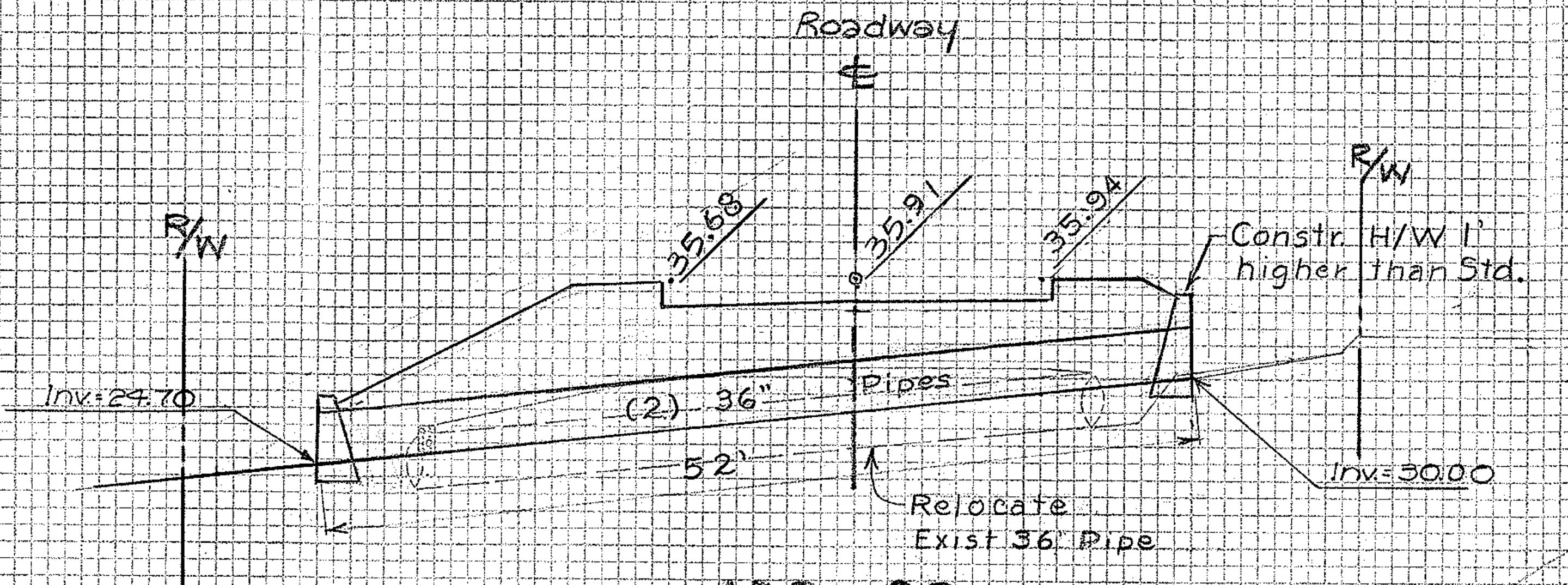

Roadway
℄
R/W
R/W
35.68
35.91
35.94
Constr. H/W 1' higher than Std.
Inv.=24.70
(2) 36" Pipes
52'
Inv.=30.00
Relocate Exist 36" Pipe
30
20

139 + 80

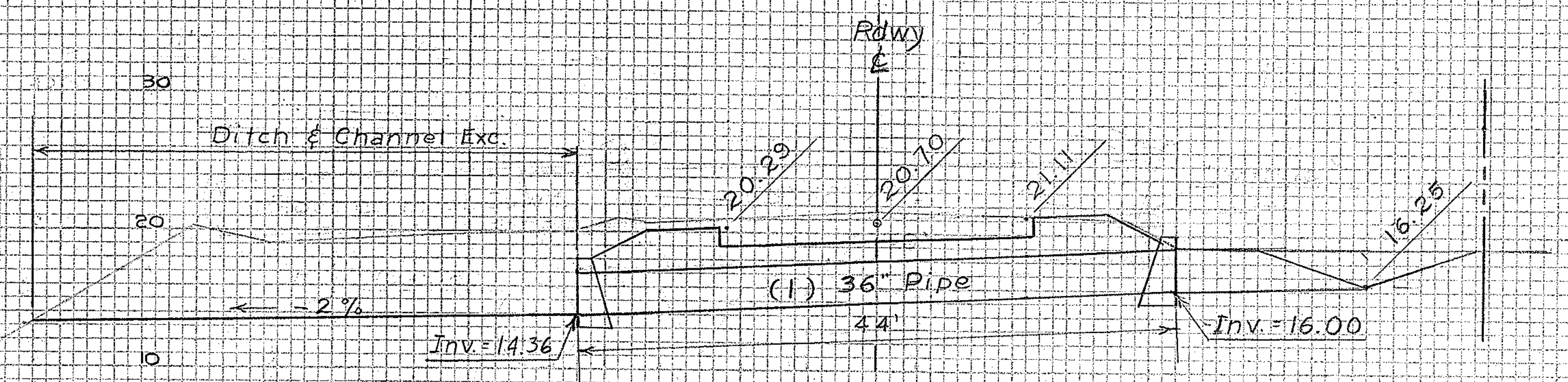

Rdwy
℄
30
Ditch & Channel Exc.
20.29
20.70
21.11
16.25
20
~2%
10
(1) 36" Pipe
Inv.=14.36
44'
Inv.=16.00

179 + 00

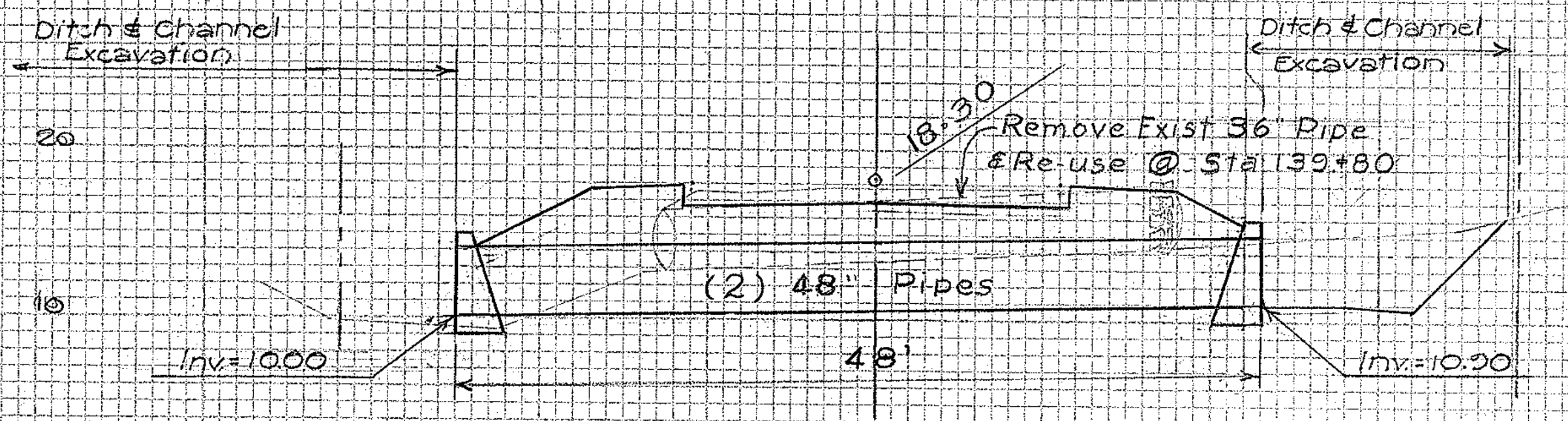

Ditch & Channel Excavation
Ditch & Channel Excavation
20
18.30
Remove Exist 36" Pipe & Re-use @ Sta 139+80
10
(2) 48" Pipes
Inv.=10.00
48'
Inv.=10.00

171 + 00

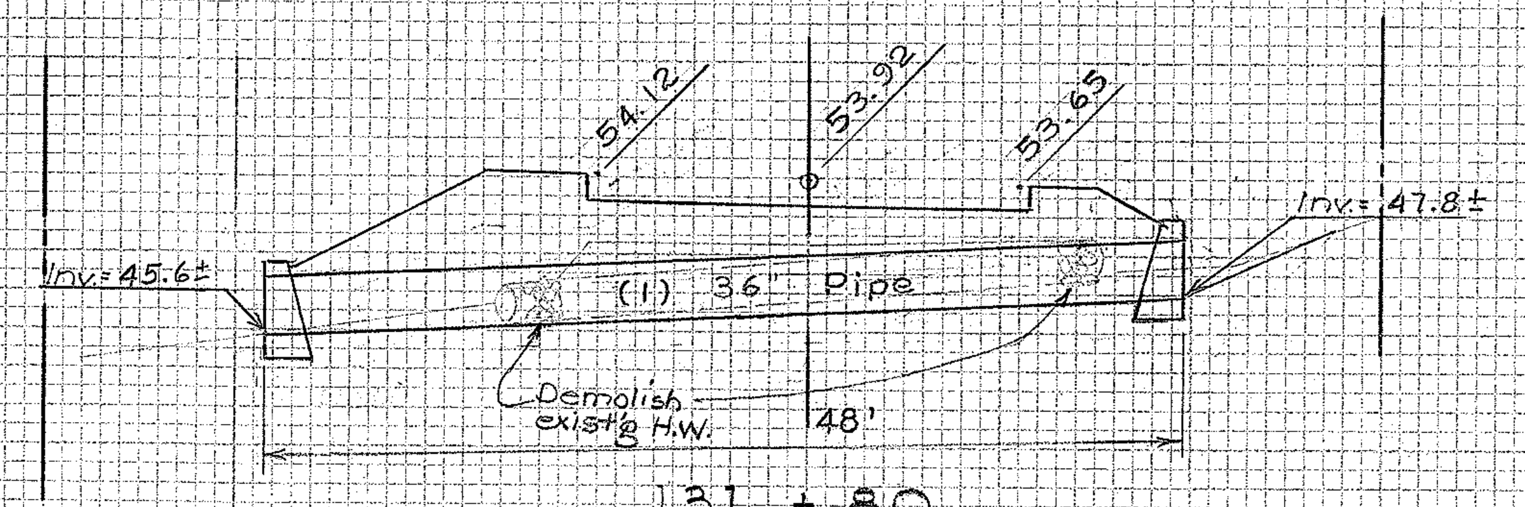

54.12
53.92
53.65
Inv.=47.8±
50
Inv.=45.6±
(1) 36" Pipe
Demolish exist'g H.W.
48'
40

131 + 80

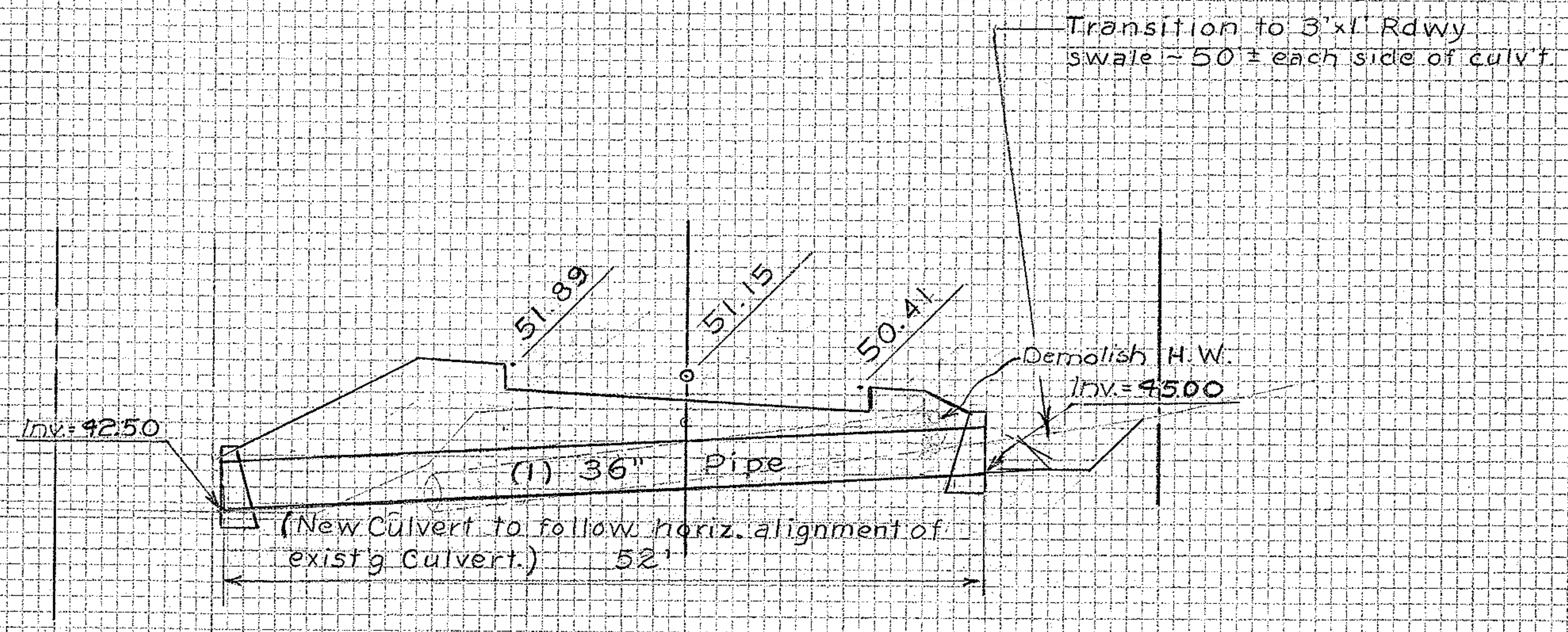

Transition to 3'x1' Rdwy swale ~50'± each side of culv't.
51.89
51.15
50.41
Demolish H.W.
Inv.=45.00
50
Inv.=42.50
(1) 36" Pipe
(New Culvert to follow horiz. alignment of exist'g Culvert.)
52'
40

130 + 55.19

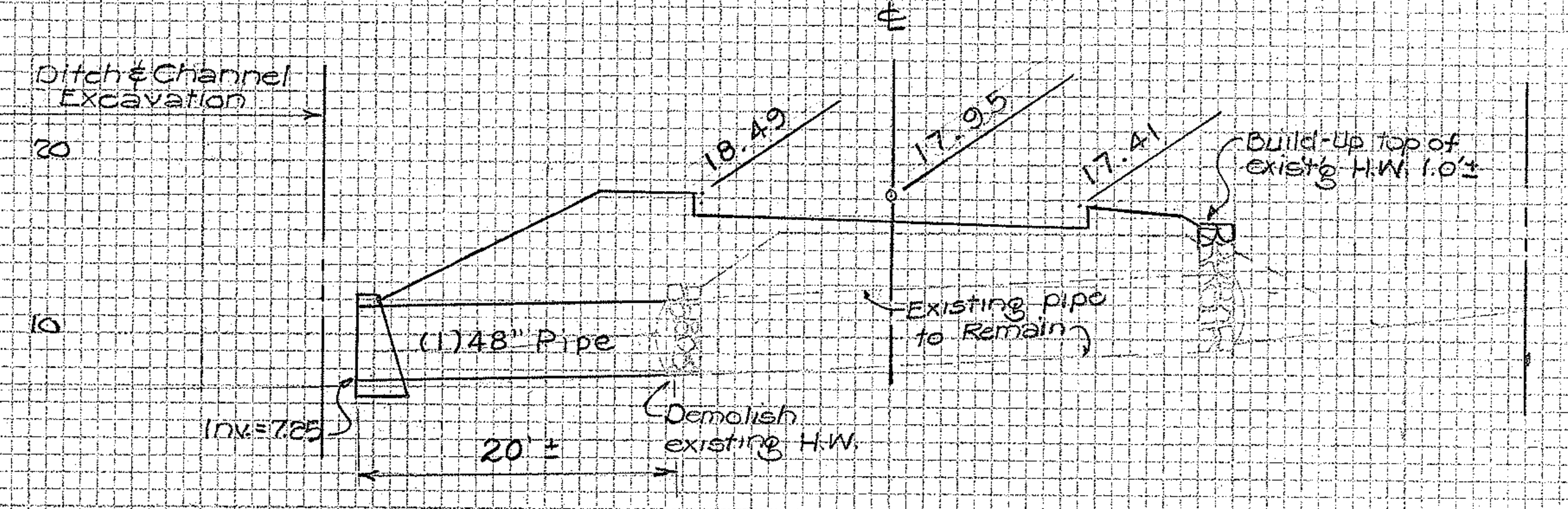

℄
Ditch & Channel Excavation
20
18.49
17.95
17.41
Build-Up top of exist'g H.W. 1.0'±
10
(1) 48" Pipe
Existing pipe to Remain
Inv.=7.25
Demolish existing H.W.
20'±

148 + 39.99 (See Roadway Plan)

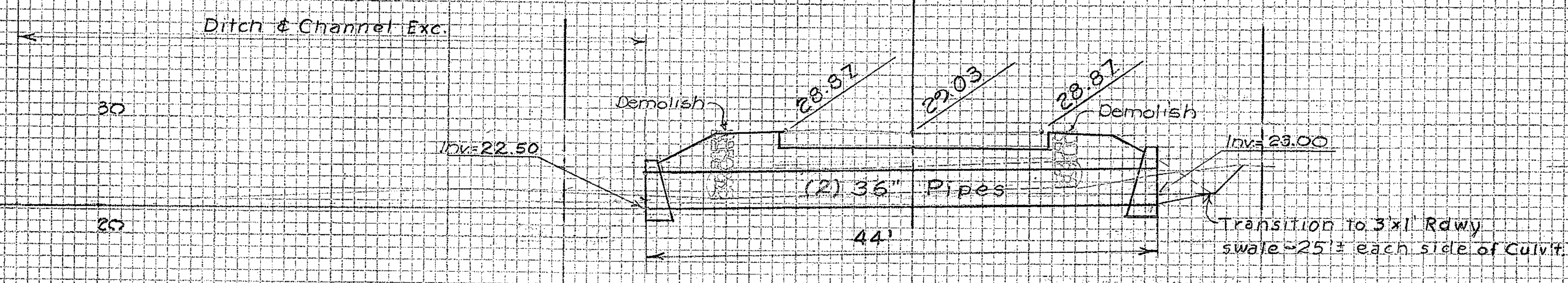

Ditch & Channel Exc.
Demolish
28.87
29.03
28.87
Demolish
30
Inv.=22.50
Inv.=23.00
(2) 36" Pipes
Transition to 3'x1' Rdwy swale ~25'± each side of Culv't.
20
44'

122 + 68

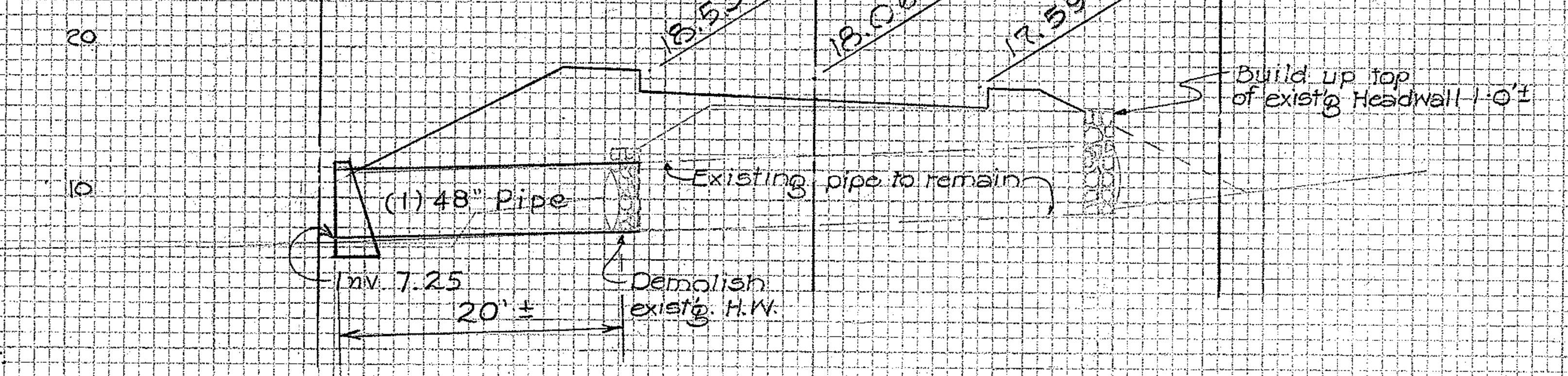

20
18.53
18.06
17.59
Build up top of exist'g Headwall 1.0'±
10
(1) 48" Pipe
Existing pipe to remain
Inv. 7.25
Demolish exist'g H.W.
20'±

148 + 34.99 (See Roadway Plan)

NOTE:

1. All existing 36" & 48" R.C.C.P. shall be salvaged and re-used, if serviceable.
2. All new culvert pipe shall be Class III Reinforced Concrete Culvert Pipe, of sizes shown, except as otherwise noted in the Plans, or ordered by the Engineer.

FINAL SURVEY NOTE BOOK NO.
SURVEYED
PLOTTED
TEMPLATE
AREAS
AREAS CHECKED
BY
DATE

ORIGINAL SURVEY NOTE BOOK NO.
SURVEYED
PLOTTED
TEMPLATE
AREAS
AREAS CHECKED
BY
DATE

CULVERT PROFILES

NO. 3-CROSS SECTION, F.A.S.
CLEARPRINT PAPER CO., S. F. CAL.
NO. 1020H-3

FED. ROAD DIST. NO.	STATE	FED.AID PROJ. NO.	FISCAL YEAR	SHEET NO.	TOTAL SHEETS
HAWAII	HAW.	S-0990(2)	62-63	10	19

FINAL SURVEY
SURVEYED
PLOTTED
TEMPLATE
AREAS
NOTE BOOK
AREAS CHECKED
NO.
BY
DATE

ORIGINAL SURVEY
SURVEYED
PLOTTED
TEMPLATE
AREAS
NOTE BOOK
AREAS CHECKED
NO.
BY
DATE

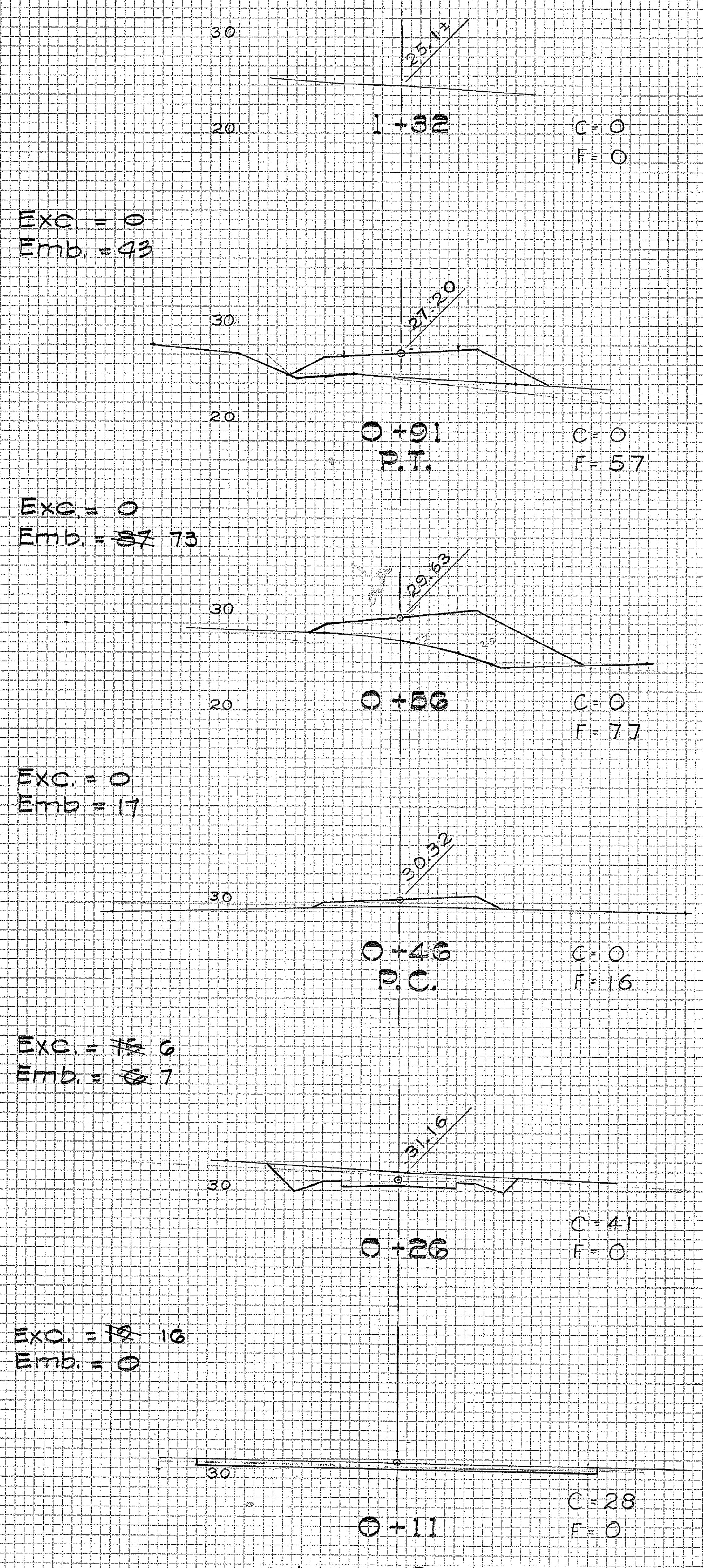
30
25.1±
20
1+32
C=0
F=0
Exc. = 0
Emb. = 43
27.20
0+91
P.T.
C=0
F=57
Exc. = 0
Emb. = ~~87~~ 73
29.63
0+56
C=0
F=77
Exc. = 0
Emb = 17
30.32
0+46
P.C.
C=0
F=16
Exc. = ~~15~~ 6
Emb. = ~~6~~ 7
31.16
0+26
C=41
F=0
Exc. = ~~19~~ 16
Emb. = 0
0+11
C=28
F=0

Driveway~Sta. 144+25 Lt.

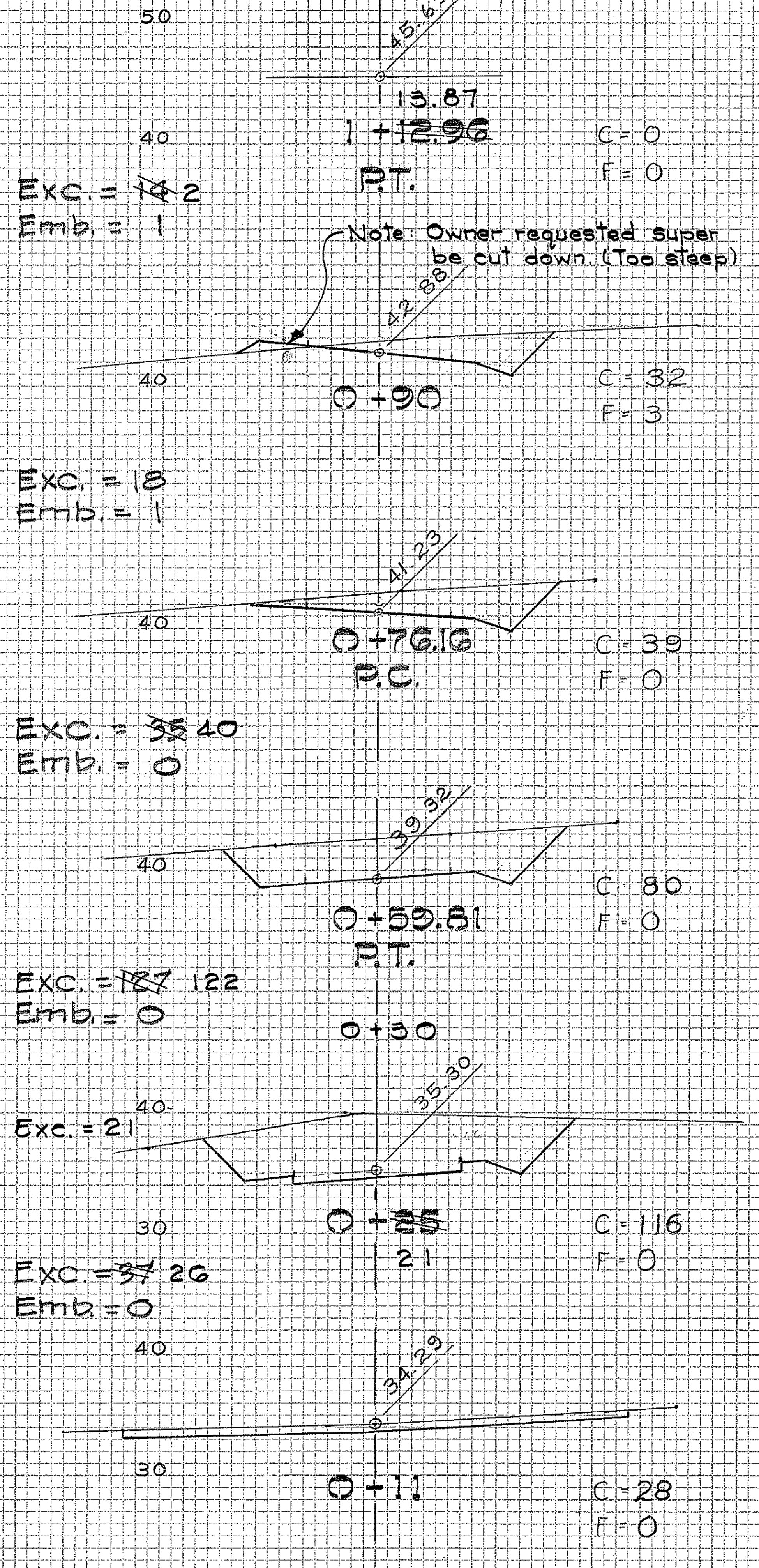
50
45.6±
13.87
1+~~12.96~~
P.T.
C=0
F=0
Exc. = ~~14~~ 2
Emb. = 1
Note: Owner requested super be cut down. (Too steep)
42.88
40
0+90
C=32
F=3
Exc. = 18
Emb. = 1
41.23
0+76.16
P.C.
C=39
F=0
Exc. = ~~35~~ 40
Emb. = 0
39.32
0+59.81
P.T.
C 80
F=0
Exc. = ~~187~~ 122
Emb. = 0
0+50
Exc. = 21
35.30
0+~~25~~
21
C=116
F=0
Exc. = ~~37~~ 26
Emb = 0
34.29
30
0+11
C=28
F=0

Driveway~Sta. 143+50 Rt.

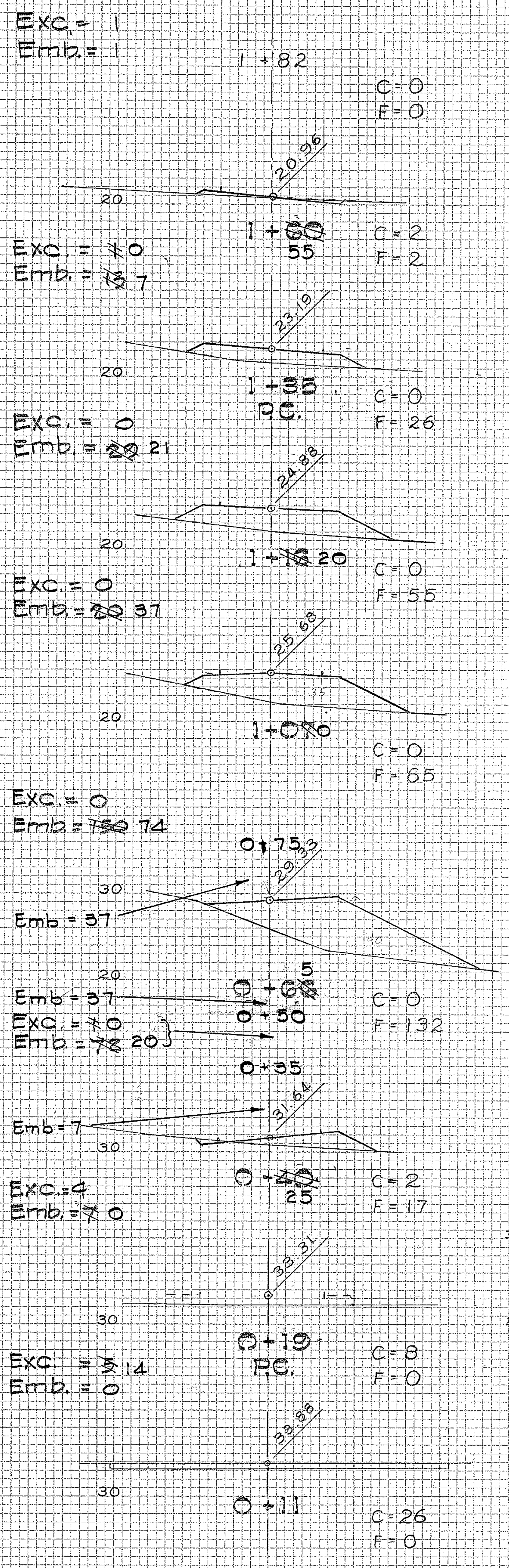
Exc. = 1
Emb. = 1
1+82
C=0
F=0
20.96
20
1+~~60~~
55
C=2
F=2
Exc. = ~~1~~0
Emb. = ~~13~~ 7
23.19
1+35
P.C.
C=0
F=26
Exc. = 0
Emb. = ~~29~~ 21
24.88
1+~~16~~ 20
C=0
F=55
Exc. = 0
Emb. = ~~20~~ 37
25.68
1+0~~7~~0
C=0
F=65
Exc. = 0
Emb. = ~~150~~ 74
0+75
29.33
Emb = 37
30
0+6~~6~~
5
Emb = 37
Exc. = ~~1~~0
Emb. = ~~78~~ 20
0+50
C=0
F=132
0+35
Emb = 7
31.64
0+~~20~~
25
C=2
F=17
Exc. = 4
Emb. = ~~7~~ 0
33.31
0+19
P.C.
C=8
F=0
Exc. = ~~5~~ 14
Emb. = 0
33.88
0+11
C=26
F=0

Driveway~Sta. 141+80 Lt.

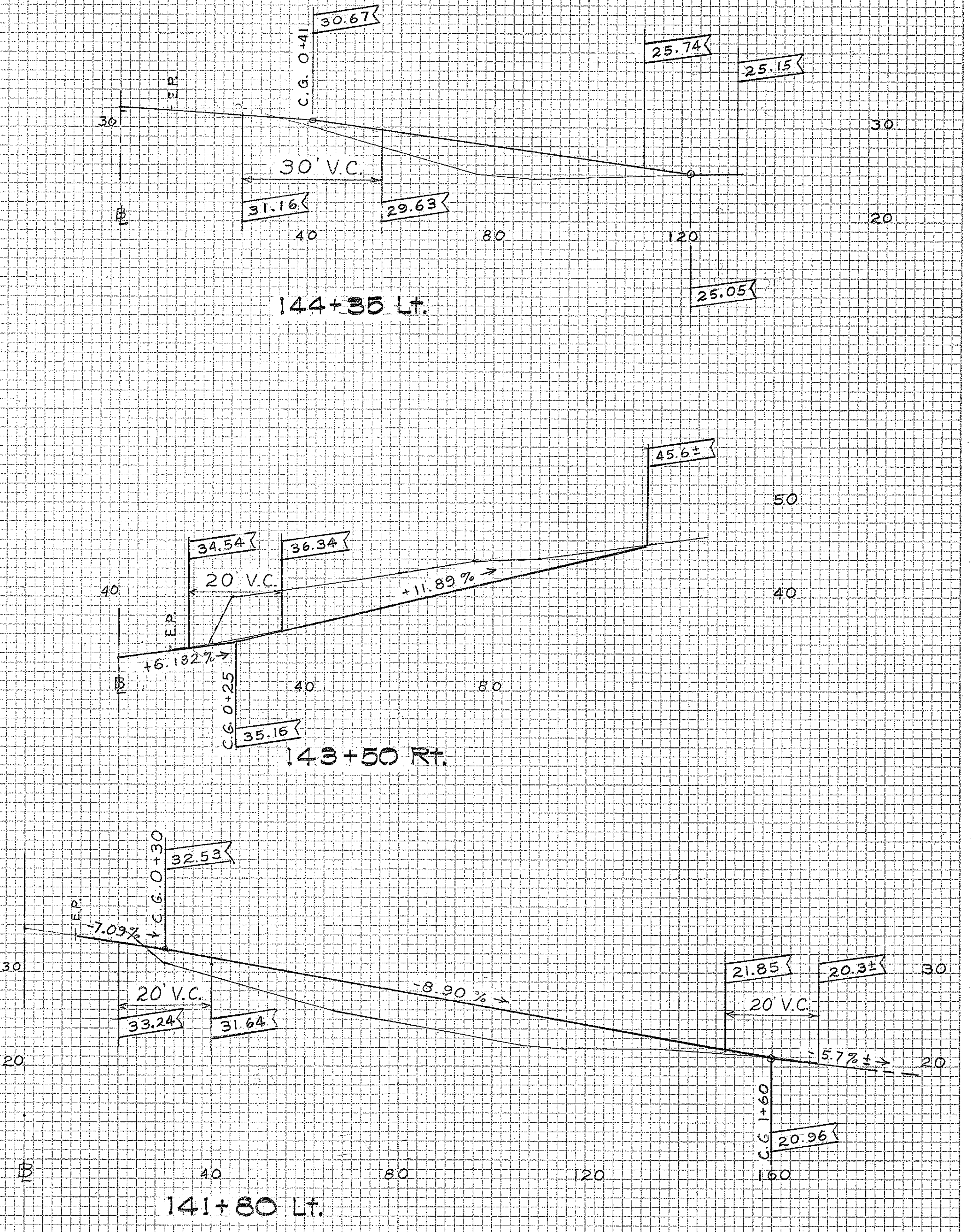
30.67
C.G. 0+41
E.P.
30' V.C.
31.16
29.63
25.74
25.15
25.05
40
80
120
30
20
144+35 Lt.
45.6±
34.54
36.34
20' V.C.
+11.89 %
+6.182 %
E.P.
C.G. 0+25
35.16
40
80
50
40
143+50 Rt.
32.53
C.G. 0+30
E.P.
-7.09%
20' V.C.
33.24
31.64
-8.90 %
21.85
20.3±
20' V.C.
-5.7% ±
C.G. 1+60
20.96
40
80
120
160
30
20
141+80 Lt.

PROFILE
Scale: Hor. 1"=20'
Vert. 1"=10'

DRIVEWAY DETAILS

PLATE 3 - CROSS SECTION, F.A.S.
CLEARPRINT PAPER CO., S. F. CAL.
NO. 1000H-3