Exhibit C

H-3 AS-BUILT DRAWINGS FOR EXISTING OPCOM COMMMUNICATION SYSTEM

H-3 Legend

ABBREVIATIONS

AFF	= ABOVE FINISHED FLOOR
BLW	= BELOW
BYD	= BEYOND
CB	= CONTROL BLDG.
CO	= CARBON MONOXIDE DETECTOR
COMM	= COMMUNICATIONS
DN	= DOWN
DWG	= DRAWING
EL	= ELEVATION
ELEC	= ELECTRICAL
EQ	= EQUAL
EQUIP.	= COMMUNICATIONS EQUIPMENT ROOM
FACP	= FIRE ALARM CONTROL PANEL
FF	= FINISHED FLOOR
FKOC	= FIBEROPTIC COMMUNICATION EQUIPMENT
F.V. & E.	= FIRE VALVE AND EXTINGUISHER
GRS	= GALVANIZED RIGID METAL CONDUIT
HECO	= HAWAIIAN ELECTRIC COMPANY
HTCO	= HAWAIIAN TELEPHONE COMPANY
MAX	= MAXIMUM
MCC	= MOTOR CONTROL CENTER
MIN	= MINIMUM
ML	= MATCH LINE
OPP	= OPPOSITE
PCM	= PULSE CODE MODULATION
PDP	= POWER DISTRIBUTION PANEL
PVC	= POLYVINYL CHLORIDE CONDUIT
PW	= POWER
RTU	= REMOTE TERMINAL UNIT
SIM	= SIMILAR
TB	= TRAFFIC BEARING
TB(F)	= TERMINAL BOARD
T-PED	= CHEMREMSENSE
SH	= SHELF
CB	= TERMINAL BOARD

CONDUIT NUMBERING SYSTEM

S-1 THRU S-99	SYSTEMWIDE CUTSHAW FROM CONTROL BUILDING TO HAWN APPROACH.
S-100 THRU S-199	BRANCH CIRCUITS, TUNNELS & GROUP. ROOME (EXO = INBOUND; EXO = OUTBOUND).
S-200 THRU S-299	CONTROL BUILDING
S-300 THRU S-399	HALAWA IB PORTAL BLDG.
S-400 THRU S-499	HALAWA OB PORTAL BLDG.
S-500 THRU S-599	OPEN
S-600 THRU S-699	HAWAI IB PORTAL BLDG.
S-700 THRU S-799	HAWAI OB PORTAL BLDG.
S-800 THRU S-899	HAWAI APPROACH.
S-900 THRU S-1099	HALAWA APPROACH.
S-1100 THRU S-1199	HAWAI APPROACH.
01 - 09	VERTICAL TRUNK LINES
10 - 29	LEVEL 1 & A BRANCH LINES
30 - 49	LEVEL 2 BRANCH LINES
50 - 69	LEVEL 3 BRANCH LINES
70 - 89	LEVEL 4 BRANCH LINES
90 - 99	ROOF LEVEL BRANCH LINES

LEGEND

SECTION — SECTION DESIGNATION; SHEET ON WHICH SECTION IS DRAWN; SHEET FROM WHICH SECTION IS TAKEN

DETAIL — DETAIL DESIGNATION; SHEET ON WHICH DETAIL IS DRAWN; SHEET FROM WHICH DETAIL IS TAKEN

SECTION OR DETAIL TAKEN AND DRAWN ON THE SAME SHEET OR STANDARD SECTIONS OR DETAIL

FIRE ZONE IDENTIFICATION SYSTEM

XX XX — BOX NUMBER (SEQUENTIAL)

FLOOR LEVEL: A / 1 / 2 / 3 / 4 / X

BUILDING:
- NW = HALAWA IB
- SW = HALAWA OB
- NE = HAWAI IB
- SE = HAWAI OB
- CB = CONTROL BUILDING
- HS = HECO SUBSTATION

PULLBOX IDENTIFICATION SYSTEM

FUNCTION: S = SYSTEMS, C = COMMUNICATIONS, F = FIRE OR T = TRAFFIC

FIRE - 2.0 — BOX NUMBER (SEQUENTIAL)

FLOOR LEVEL: A / 1 / 2 / 3 / 4 / X

BUILDING:
- NW = HALAWA IB
- SW = HALAWA OB
- NE = HAWAI IB
- SE = HAWAI OB
- CB = CONTROL BUILDING
- HS = HECO SUBSTATION

BOX TYPE:
- HH = HANDHOLE
- JB = JUNCTION BOX
- PB = PULLBOX
- PS = PULLSTATION
- (TXX) = EMERGENCY TELEPHONE

BOX NUMBER (SEQUENTIAL)

TUNNELBORE: N = INBOUND, S = OUTBOUND

HHS - 3.15

CROSSPROGRAME NUMBER (NEAREST / RELATIVE)

FUNCTION: S = SYSTEMS, C = COMMUNICATIONS, F = FIRE OR T = TRAFFIC

CIRCUIT IDENTIFIERS

FP	FIRE PROTECTION
IS	INTRUSION DETECTION
SC	SUPERVISORY & CONTROL
T	TELEPHONE
SP	SPARE (EMPTY)
TC	TRAFFIC
S-XXX	CONDUIT IDENTIFICATION NUMBER
TV	TELEVISION
CB	COMMUNICATIONS ONLY

GENERAL NOTES

1. SEE SHEETS NO. T3 THRU T36 FOR CONDUIT AND EQUIPMENT SCHEDULES.
2. SWEEP AND CAP ALL UNUSED SLEEVES THROUGH STRUCTURE AT EACH END AND ALL CONDUITS THAT DO NOT TERMINATE IN A PULLBOX OR JUNCTION BOX.
3. CONDUIT SIZES SHOWN IN CONTRACT DOCUMENTS REFERENCE THE MINIMUM INSIDE DIAMETER REQUIRED.
4. INTRUSION DETECTION DEVICES LABELED ID-CXXX, ID-XXX OR ID-TX ARE ASSOCIATED WITH SPECIFIC FIRE PROTECTION VALVE SECTIONS AND VALVE BOXES. SEE SHEETS NO. X01 AND M11, CONTRACT 98, FOR SHOWING AND IDENTIFICATION.
5. SEE SHEETS NO. T13 AND T14 FOR MOST TYPICAL EXPOSED CONDUIT INSTALLATION AND SUPPORT DETAILS.
6. SUPERVISORY & CONTROL JUNCTION BOXES AND INTERFACE TERMINAL CABINETS SHALL BE MOUNTED 3'-6" (NOMINAL) ABOVE FINISHED FLOOR FOR PORTAL AND CONTROL BUILDINGS.
7. USE SLEEVES FURNISHED AND INSTALLED BY OTHERS WHERE APPLICABLE. CORE DRILL AS REQUIRED.
8. SMOKE DETECTORS SHALL BE MOUNTED AT A MAXIMUM HEIGHT EQUAL TO BOTTOM OF LOWEST BEAM IN THAT ZONE.

ELECTRICAL

PANEL WIRING

FIELD WIRING

SYMBOL	ABBR.	DESCRIPTION
	SD	SMOKE DETECTOR
	JB	JUNCTION BOX CEILING MOUNTED
	JB	JUNCTION BOX WALL MOUNTED
	PS	FIRE ALARM PULL STATION
	T XXX	TELEPHONE PANEL
	PB(X)	PULLBOX, HECO, EXISTING IN GRADE
	PB(X)	PULLBOX, HECO, IN GRADE, 1'-4" X 2'-6"
	HHX (X)	HANDHOLE, HECO, EXISTING
	HH (X)	HANDHOLE, HECO, 4' X 8'
	PB(X)	PULLBOX, HTCO, EXISTING IN GRADE
	PB(X)	PULLBOX, HTCO, IN GRADE, LARGE NO. 4.35 T-8
	PBS XX	PULLBOX (TYPE C), COMM., EXISTING SEE SHEET NO. T730
	PBS XX	PULLBOX (TYPE C), COMM., IN GRADE SEE SHEET NO. T730
	PBS XX	PULLBOX (TYPE D), ELEC., EXISTING SEE SHEET NO. T730
	PBS XX	PULLBOX (TYPE D), ELEC., IN GRADE SEE SHEET NO. T730
	PBS XX	PULLBOX (TYPE D), SIGNALS, EXISTING SEE SHEET NO. T730
	PBS XX	PULLBOX (TYPE D), SIGNALS, IN GRADE SEE SHEET NO. T730
	HHS XX	HANDHOLE, ELECTRICAL (EXISTING)
	HHS XX	HANDHOLE, SIGNALS (EXISTING)
	HHS XX	HANDHOLE, COMM (EXISTING)
	HHS XX	JUNCTION BOX, ELECTRICAL 18'W X 34"L X 12"D
	HHS XX	JUNCTION BOX, SIGNALS 18'W X 34"L X 12"D
	HHS XX	JUNCTION BOX, COMM. 18'W X 34"L X 12"D
EES	EES 01	EMERGENCY EXIT SIGN
	IS	INTRUSION DETECTION CONNECTION
	SC	SUPERVISORY AND CONTROL (TFC, RTU)
	TV	CLOSED CIRCUIT TELEVISION CAMERA
	C 01	INTERCOM
	H 01	HORN
	ST 01	STROBE
	F 01	FLASHING BEACON
E	EXB XXX	EMERGENCY PHONE INBOUND ROADWAY
E	EXB XXX	EMERGENCY PHONE OUTBOUND ROADWAY

SYMBOL	ABBR.	DESCRIPTION
	FKOC	FIBEROPTIC INTERFACE COMMUNICATION EQUIPMENT
	FO HUB X	FIBEROPTIC HUB W/DOOR LOCATION INDICATED
	SC 01	SIGN CONTROLLER W/DOOR LOCATION INDICATED
	TC 01	TRAFFIC CONTROLLER W/DOOR LOCATION INDICATED
	TVC	TV CONTROLLER W/DOOR LOCATION INDICATED
	SC(T)01	SIGN CONTROLLER (FUTURE)(NIC)
	TC(T)01	TRAFFIC CONTROLLER (FUTURE)(NIC)
	T 01	HECO TRANSFORMER PAD - SINGLE PHASE W/DOOR LOCATION INDICATED
	T 03	HECO TRANSFORMER PAD - 3 PHASE W/DOOR LOCATION INDICATED
		SERVICE METER CABINET
	GR/S	RETAINING WALL / STRUCTURE
	FV	FDICE
P	P	POWER SOURCE
	IA	IMPACT ATTENUATOR
RTU	RTU	REMOTE TERMINAL UNIT
ITC	ITC	INTERFACE TERMINAL CABINET
FACP	FACP	FIRE ALARM CONTROL PANEL
	DA 01	DETECTOR AMPLIFIER
	DG 01	SWING GATE
	TS 01	TRAFFIC SIGNAL HORIZONTAL MOUNT
	OH 01	OVERHEIGHT DETECTOR
	SP	SIGN POST
	CMS 01	CHANGEABLE MESSAGE SIGN
	CMS(F)01	CHANGEABLE MESSAGE SIGN (FUTURE)(NIC)
	FS 01	FIXED MESSAGE SIGN
	LS	LIGHT STANDARD (POLE)
	LSB	LIGHT FIXTURE IN BARRIER
	TN	CONDUIT/CABLE SCHEDULE
	CN	CONSTRUCTION NOTE
	HD	LINEAR HEAT DETECTOR
	FS 01	FIXED SIGN - OVERHEIGHT DETECTOR

SYMBOL	ABBR.	DESCRIPTION
	VDS 1.1-1.3	VEHICLE DETECTION STATION
VMS	VMS 01	VARIABLE MESSAGE SIGN
	VMS(F)01	VARIABLE MESSAGE SIGN (FUTURE)(NIC)
	LCD 01	LANE CONTROL DISPLAY (CHANGEABLE)
	LCD(F)01	LANE CONTROL DISPLAY (FUTURE)(NIC)
	LCD 01	LANE CONTROL DISPLAY - SINGLE INDICATION
	TS 01	SINGLE TRAFFIC SIGNAL - VERTICAL MOUNT
	TS 01	SINGLE TRAFFIC SIGNAL - VERTICAL MOUNT (FUTURE)
	TS 01.02	DOUBLE TRAFFIC SIGNAL - VERTICAL MOUNT
	TS 01 (F)	DOUBLE TRAFFIC SIGNAL - VERTICAL MOUNT (FUTURE)
	SB 01	SIGN BRIDGE
	SB 01	SIGN BRIDGE (FUTURE)(NIC)
	CS	SIGN BRIDGE CANTILEVER (EXISTING)
	SS	SIGN BRIDGE HALF-WIDTH
	SS	SIGN BRIDGE HALF-WIDTH (EXISTING)
CO	CO M	CO MONITOR

CONDUIT

CONDUIT STUBOUT WITH CAP

CONDUIT TURNED DOWN OR AWAY

CONDUIT TURNED UP OR TOWARD

CONDUIT EXPOSED (CIRCUIT IDENTIFIER SHOWN)

CONDUIT EMBEDDED IN FLOOR OR CEILING (CIRCUIT IDENTIFIER SHOWN)

CONDUIT, IN STRUCTURE

CONDUIT, IN STRUCTURE (EXISTING)

SURFACE MOUNTED CONDUIT

WARLINE FIBEROPTIC CABLE

RADIO NONHOMOGENEOUS

CONDUIT, IN GRADE (EXISTING)

CONDUIT, IN GRADE

ADSL CABLE (NEW)

REV.	DATE	DESCRIPTION	BY	APP.
A	7-9-94	ISSUED FOR APPROVAL	B.C.	

SCALE: AS SHOWN

DESIGNED: R. COOPER 7-9-94 APPROVED

DRAWN: R. COOPER 7-9-94 FILE: 000-0005 / DATE: 07-11-94 APPROVED

CHECKED

TRANSDYN CONTROLS, INC.

STATE OF HAWAII
DEPARTMENT OF TRANSPORTATION

INTERSTATE ROUTE H-3
ABBREVIATIONS, GENERAL NOTES & SYMBOLS

JOB NO.	CLIENT JOB NO.	DRAWING NO.	REVISION
3125		3125-000-0005	A

H-3 System Block Diagram

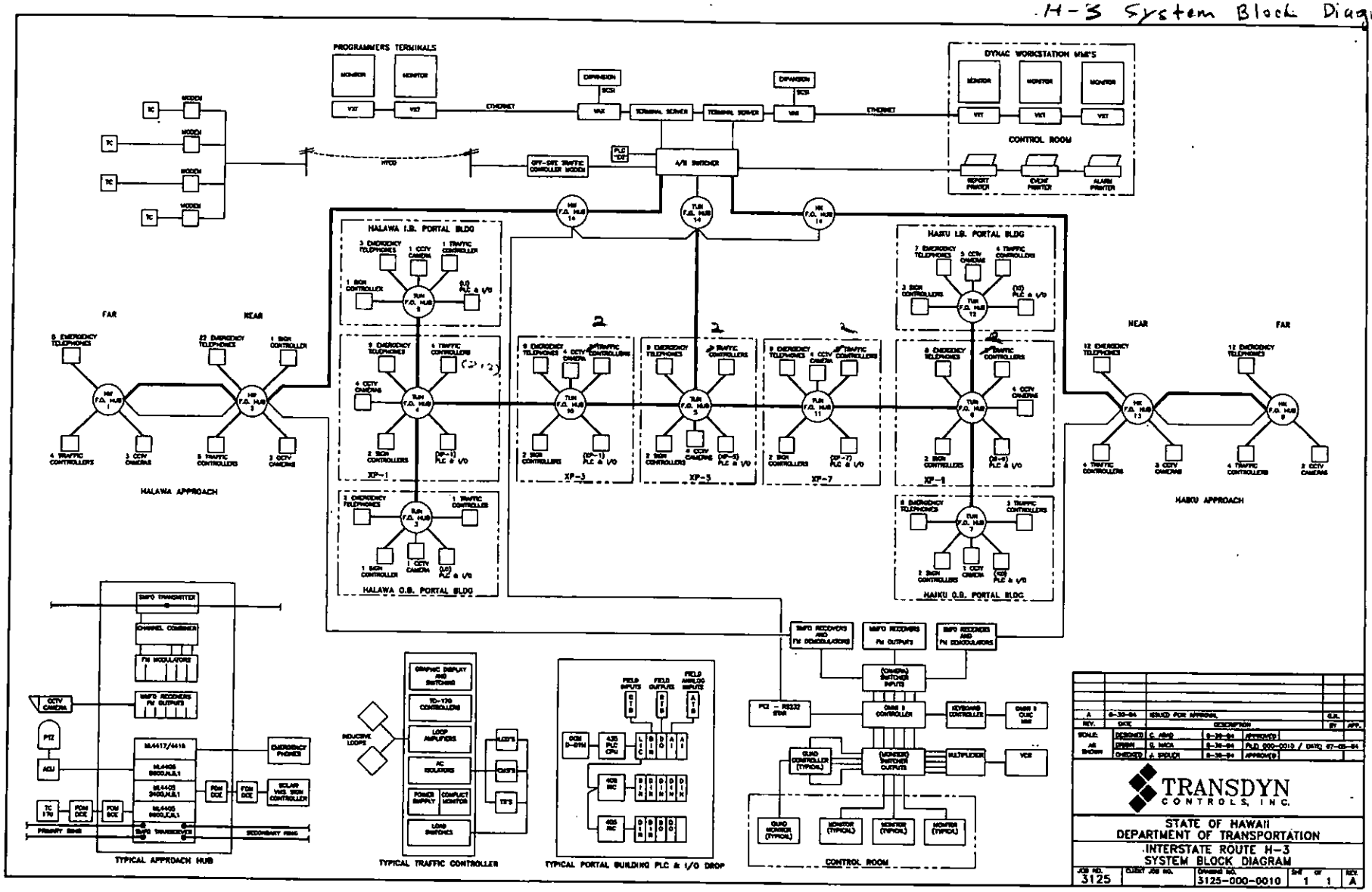

Telephone & Intercom System

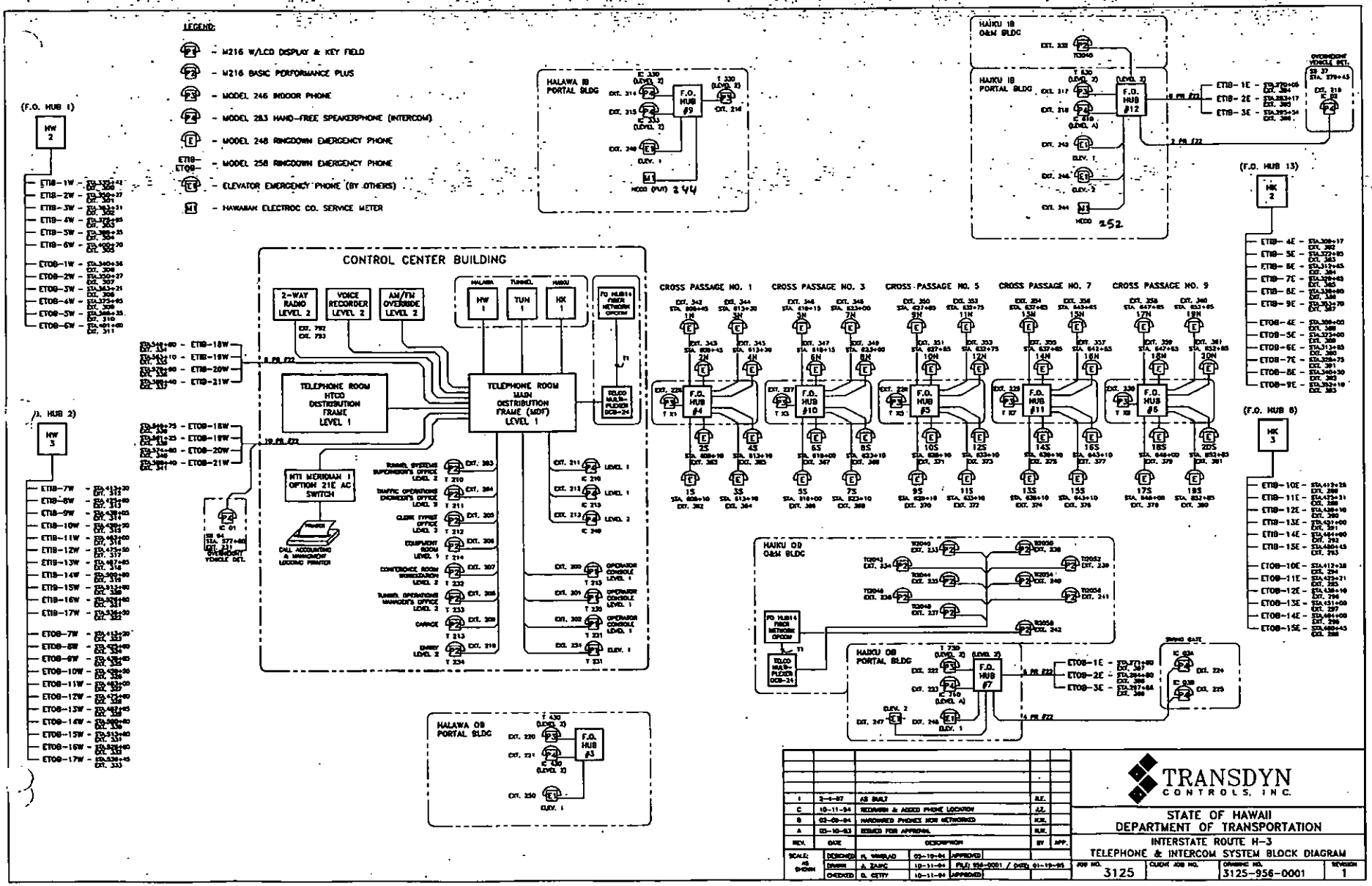

Traffic Control System

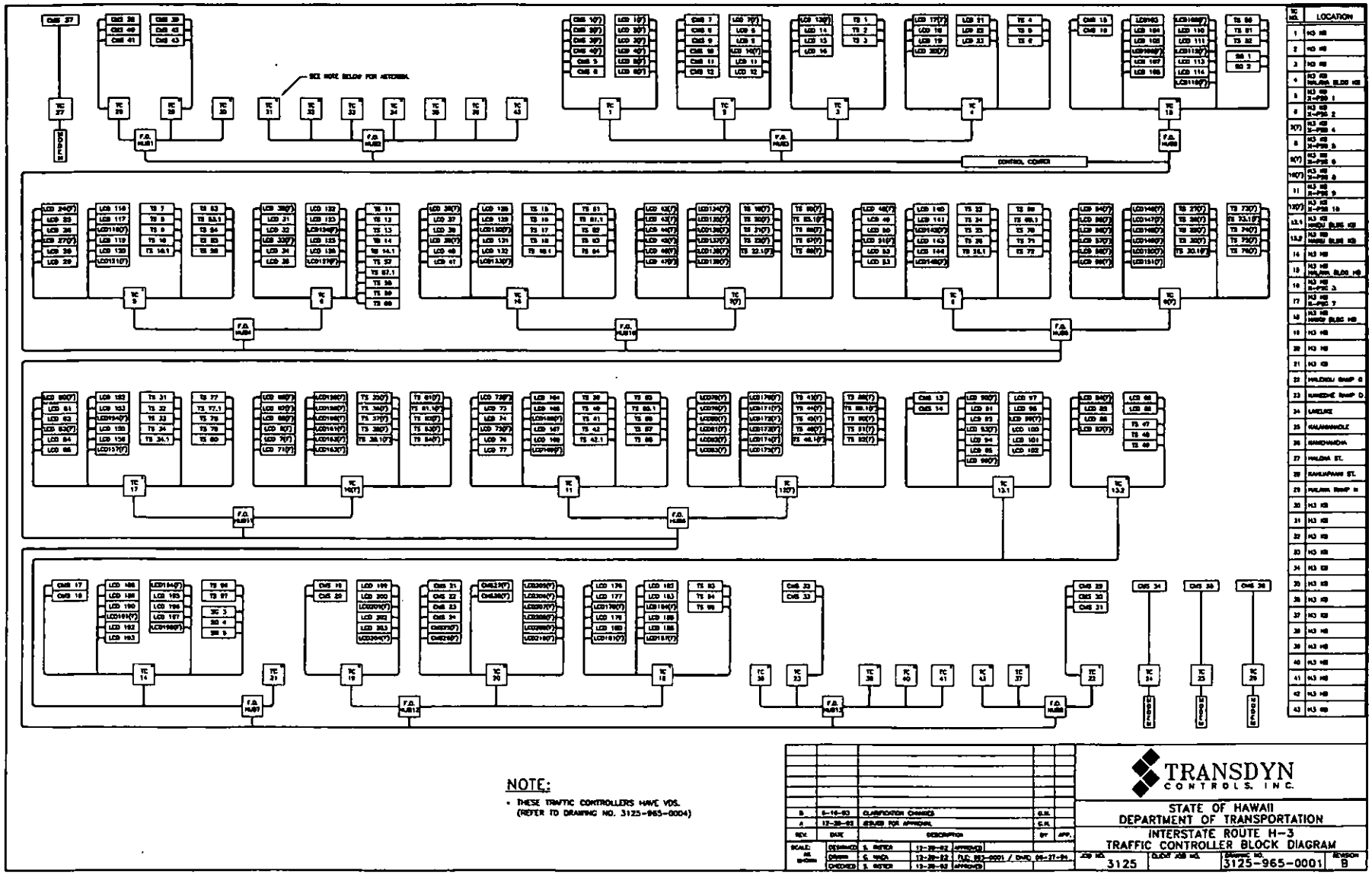

CMS System

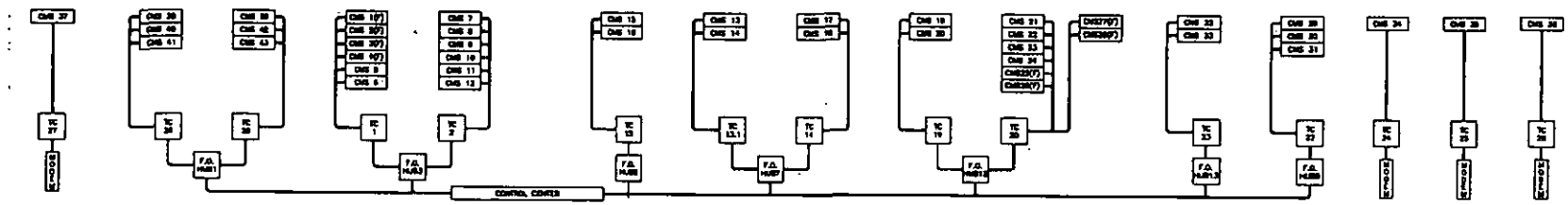

REV.	DATE	DESCRIPTION	BY	APP.
B	6-15-83	CLARIFICATION CHANGES	S.R.	
A	12-30-82	ISSUED FOR APPROVAL	C.R.	

SCALE: AS SHOWN

DESIGNED	S. RISTER	12-30-82	APPROVED
DRAWN	E. HAGA	12-30-82	PLI 965-0002 / DATE 06-29-84
CHECKED	S. RISTER	12-30-82	APPROVED

TRANSDYN CONTROLS, INC.

STATE OF HAWAII
DEPARTMENT OF TRANSPORTATION

INTERSTATE ROUTE H-3
CMS BLOCK DIAGRAM

JOB NO. 3125 | CLIENT JOB NO. | DRAWING NO. 3125-965-0002 | REVISION B

VMS System

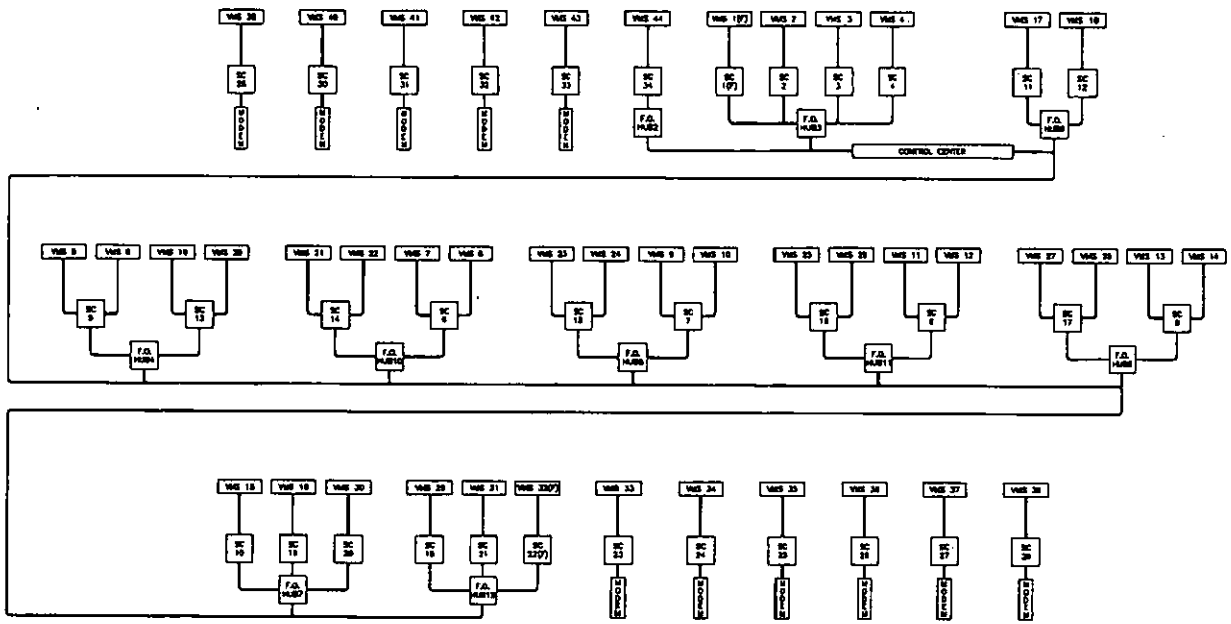

SIC NO.	LOCATION
01(7)	H3 KB
2	H3 KB
3	H3 KB
4	H3 KB HALAWA BLDG KB
5	X-PSC 2 KB
6	X-PSC 4 KB
7	X-PSC 6 KB
8	X-PSC 8 KB
9	X-PSC 10 KB
10	H3 KB HAKU BLDG KB
11	H3 HB
12	H3 HB HALAWA BLDG HB
13	X-PSC 2 HB
14	X-PSC 4 HB
15	X-PSC 6 HB
16	X-PSC 8 HB
17	X-PSC 8 LO HB
18	H3 HB HAKU BLDG HB
19	H3 HB
20	H3 HB
21	H3 KB
22(7)	H3 HB
23	KAMEHAMEHA
24	KANEOHE BAY DR.
25	H3 HB
26	KALANIANAOLE
27	KAHEKILI
28	KAMILO ST.
29	KAMEHAMEHA
30	KORNALIA
31	SCHOOL ST.
32	LUNALILO ST.
33	H1
34	H3 HB

VMS NO	LOCATION
01(7)	H3 KB
2	H3 KB
3	H3 KB
4	H3 KB
5 & 6	H3 KB
7 & 8	H3 KB
9 & 10	H3 KB
11 & 12	H3 KB
13 & 14	H3 KB
15	H3 KB
17	H3 HB
18	H3 HB
19 & 20	H3 HB
21 & 22	H3 HB
23 & 24	H3 HB
25 & 26	H3 HB
27 & 28	H3 HB
29	H3 HB
18	H3 KB
30	H3 HB
31	H3 HB
32(7)	H3 HB
33	KAMEHAMEHA
34	KANEOHE BAY DR.
35	H3 HB
36	KALANIANAOLE
37	KAHEKILI
38	H1
39	KAMEHAMEHA
40	KORNALIA
41	H1
42	H1
43	H1
44	H3 HB

REV.	DATE	DESCRIPTION	BY	APP.
B	6-19-93	CLARIFICATION CHANGES	B.R.	
A	12-29-92	ISSUED FOR APPROVAL	B.R.	

SCALE AS SHOWN

DESIGNED	B. RITTER	12-29-92	APPROVED
DRAWN	C. IMAOA	12-29-92	FILE: 965-0003 / DATE: 12-13-94
CHECKED	B. RITTER	12-29-92	APPROVED

TRANSDYN CONTROLS, INC.

STATE OF HAWAII
DEPARTMENT OF TRANSPORTATION

INTERSTATE ROUTE H-3
VMS BLOCK DIAGRAM

JOB NO.	CLIENT JOB NO.	DRAWING NO.	REVISION
3125		3125-965-0003	B

Vehicle Detection System

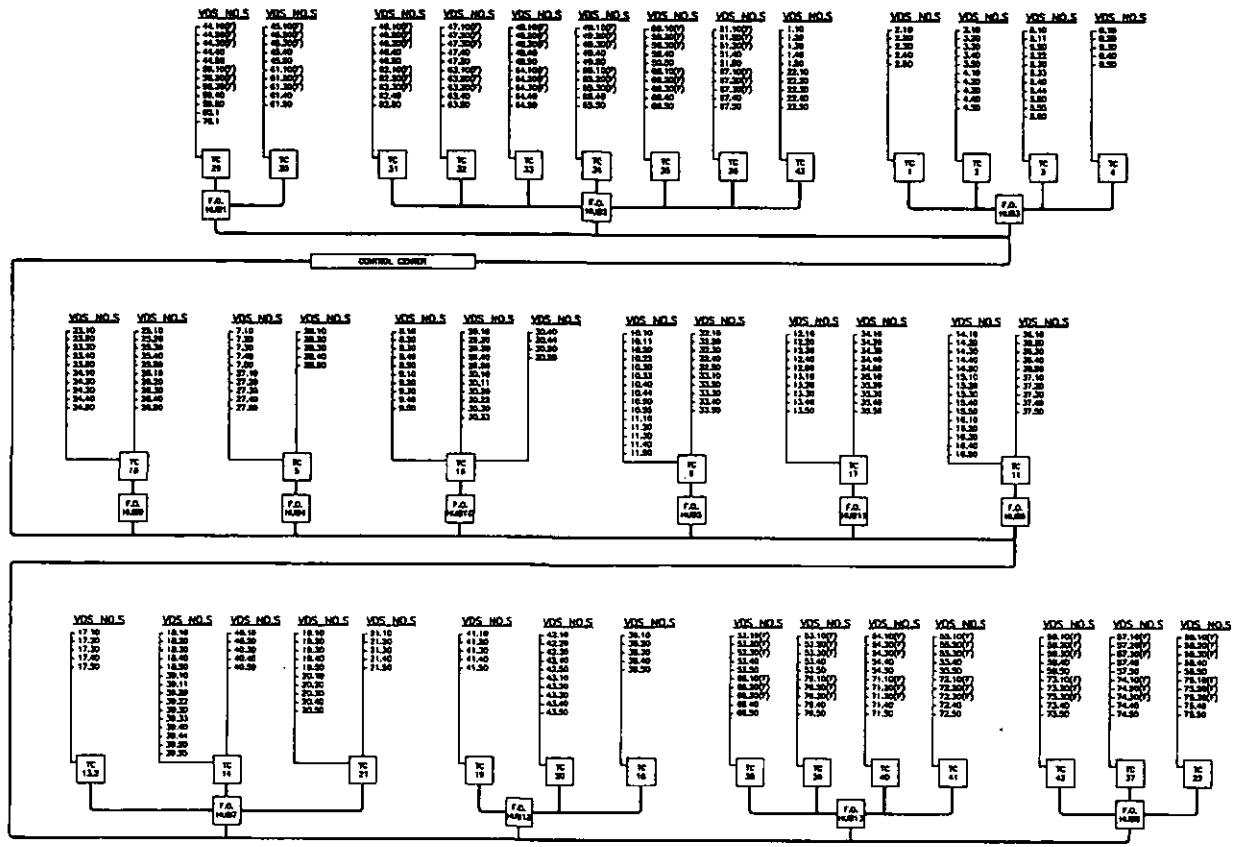

REV.	DATE	DESCRIPTION	BY	APP.
B	6-16-93	CLARIFICATION CHANGES	C.K.	
A	12-30-93	ISSUED FOR APPROVAL	C.K.	

SCALE: AS SHOWN

DESIGNED	E. WATER	12-30-92	APPROVED
DRAWN	C. WOO	12-30-92	FILE: 965-0004 / DATE: 06-27-94
CHECKED	E. WATER	12-30-93	APPROVED

TRANSDYN CONTROLS, INC.

STATE OF HAWAII
DEPARTMENT OF TRANSPORTATION

INTERSTATE ROUTE H-3
VDS BLOCK DIAGRAM

JOB NO.	CLIENT JOB NO.	DRAWING NO.	REVISION
3125		3125-965-0004	B

Typical Power @ Cabinets

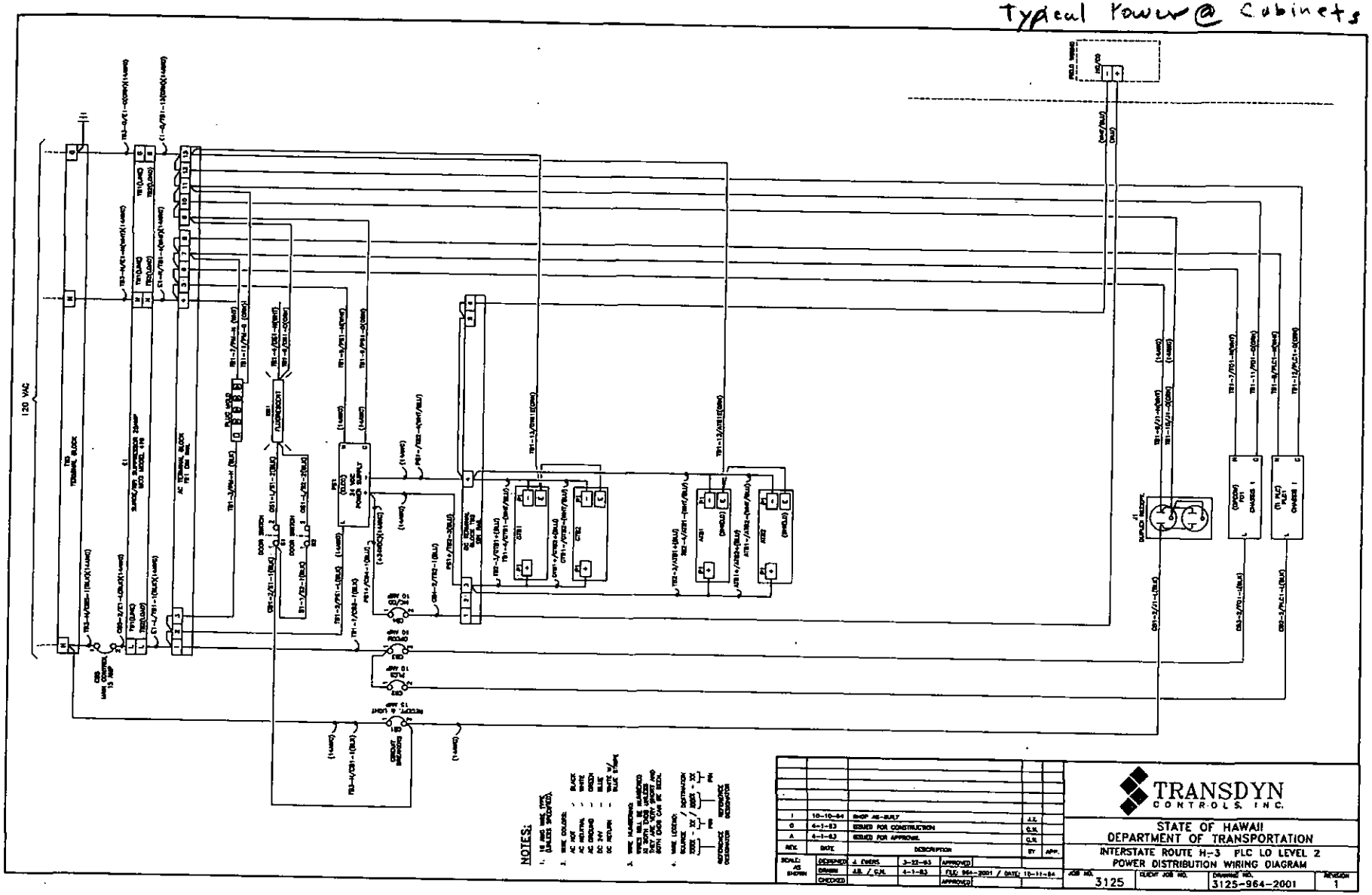

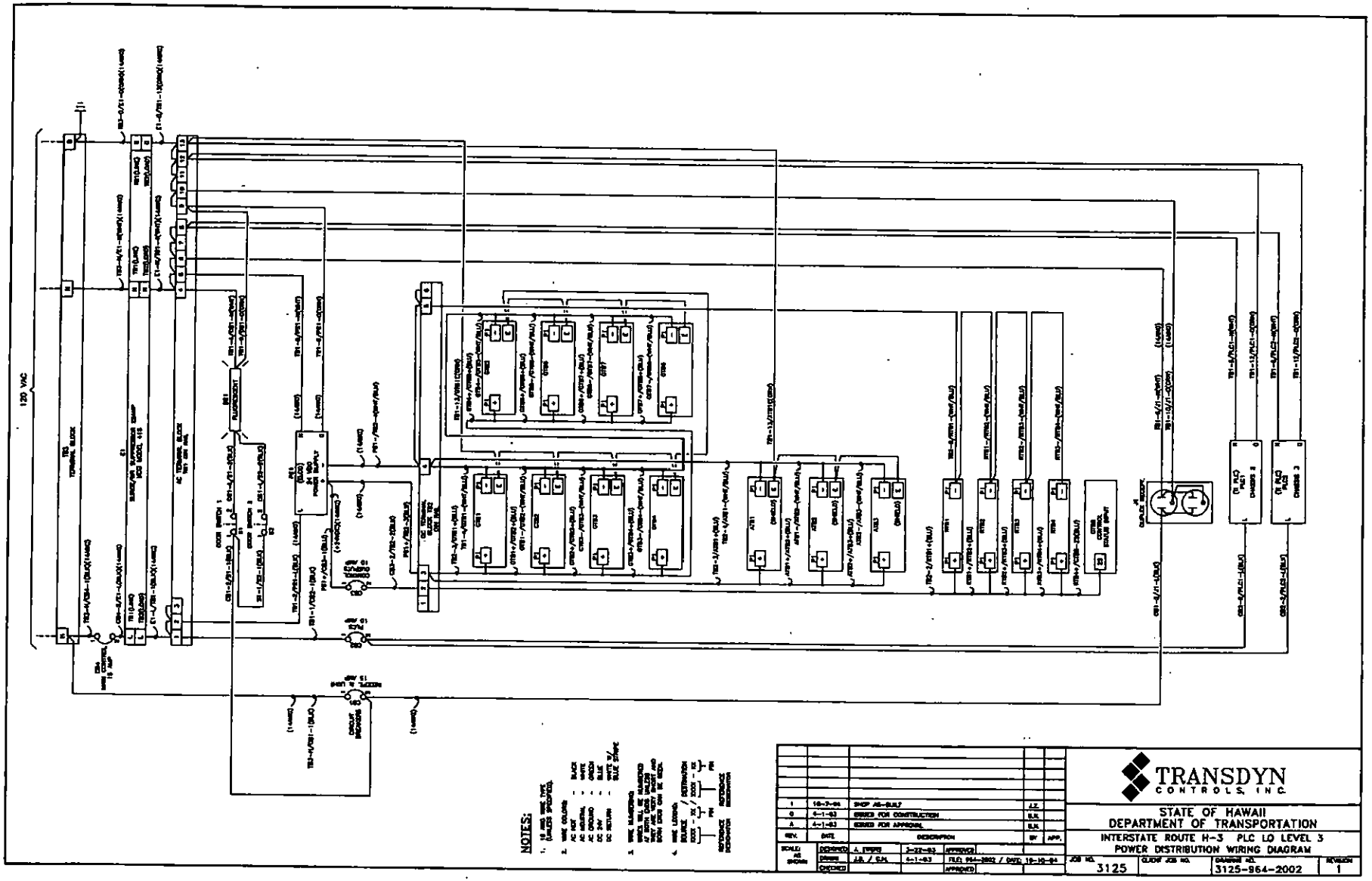

NOTES:

REV.	DATE	DESCRIPTION	BY	APP.
1	10-7-94	SHOP AS-BUILT		JJZ
0	4-1-93	ISSUED FOR CONSTRUCTION		S.K.
A	4-1-93	ISSUED FOR APPROVAL		S.K.

SCALE: AS SHOWN
DESIGNED: A. TIMPES 3-22-93
DRAWN: J.B. / S.K. 4-1-93
CHECKED:
APPROVED:
FILE: 964-2002 / DATE: 10-10-94

TRANSDYN CONTROLS, INC.

STATE OF HAWAII
DEPARTMENT OF TRANSPORTATION
INTERSTATE ROUTE H-3 PLC LO LEVEL 3
POWER DISTRIBUTION WIRING DIAGRAM

JOB NO. 3125 | CLIENT JOB NO. | DRAWING NO. 3125-964-2002 | REVISION 1

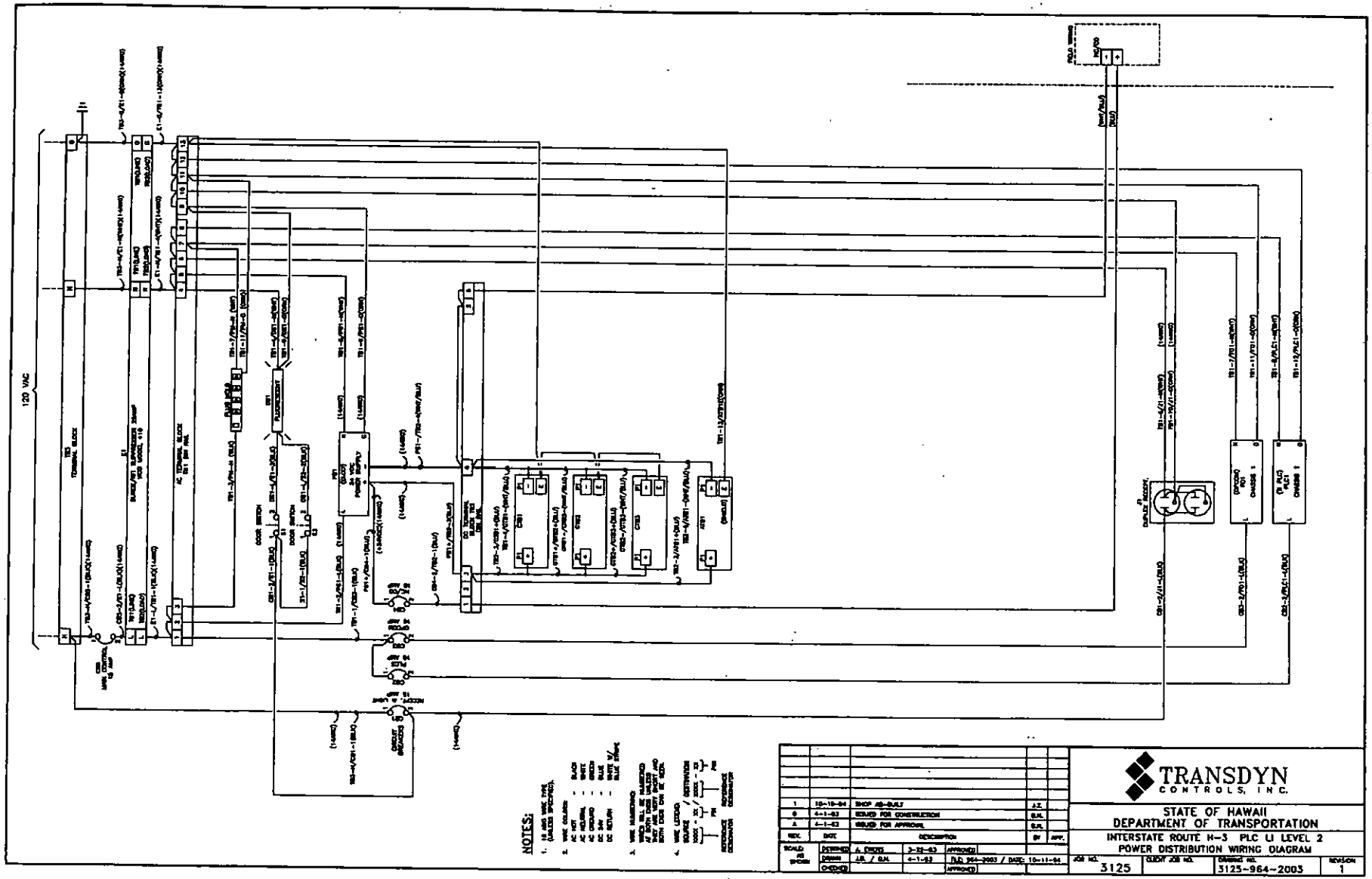
120 VAC
TB3 TERMINAL BLOCK
CIRCUIT BREAKER
AC TERMINAL BLOCK
DOOR SWITCH
CIRCUIT BREAKER
DC TERMINAL BLOCK
CR1
CR2
CR3
CR4
DUPLEX RECEPT.
NOTES:
1. 18 AWG WIRE TYPE (UNLESS SPECIFIED).
2. WIRE COLORS:
BLACK - AC HOT
WHITE - AC NEUTRAL
GREEN - AC GROUND
RED - DC +
BLUE - DC RETURN
BLUE W/ WHITE STRIPE
3. WIRE NUMBERING:
WIRES WILL BE NUMBERED AT BOTH ENDS UNLESS BOTH ARE WITHIN 6" OF EACH OTHER.
4. WIRE LOCATION / DESTINATION:
SOURCE / DESTINATION
REFERENCE DESIGNATOR
REFERENCE DESIGNATOR
1 10-10-94 SHOP AS-BUILT J.Z.
0 4-1-93 ISSUED FOR CONSTRUCTION B.H.
A 4-1-93 ISSUED FOR APPROVAL B.H.
REV. DATE DESCRIPTION BY APP.
SCALE: AS SHOWN
DESIGNED A. CHUNG 3-22-93 APPROVED
DRAWN J.B. / B.H. 4-1-93 DWG 964-2003 / DATE: 10-11-94
CHECKED APPROVED
TRANSDYN CONTROLS, INC.
STATE OF HAWAII
DEPARTMENT OF TRANSPORTATION
INTERSTATE ROUTE H-3 PLC LI LEVEL 2
POWER DISTRIBUTION WIRING DIAGRAM
JOB NO. 3125
CLIENT JOB NO.
DRAWING NO. 3125-964-2003
REVISION 1

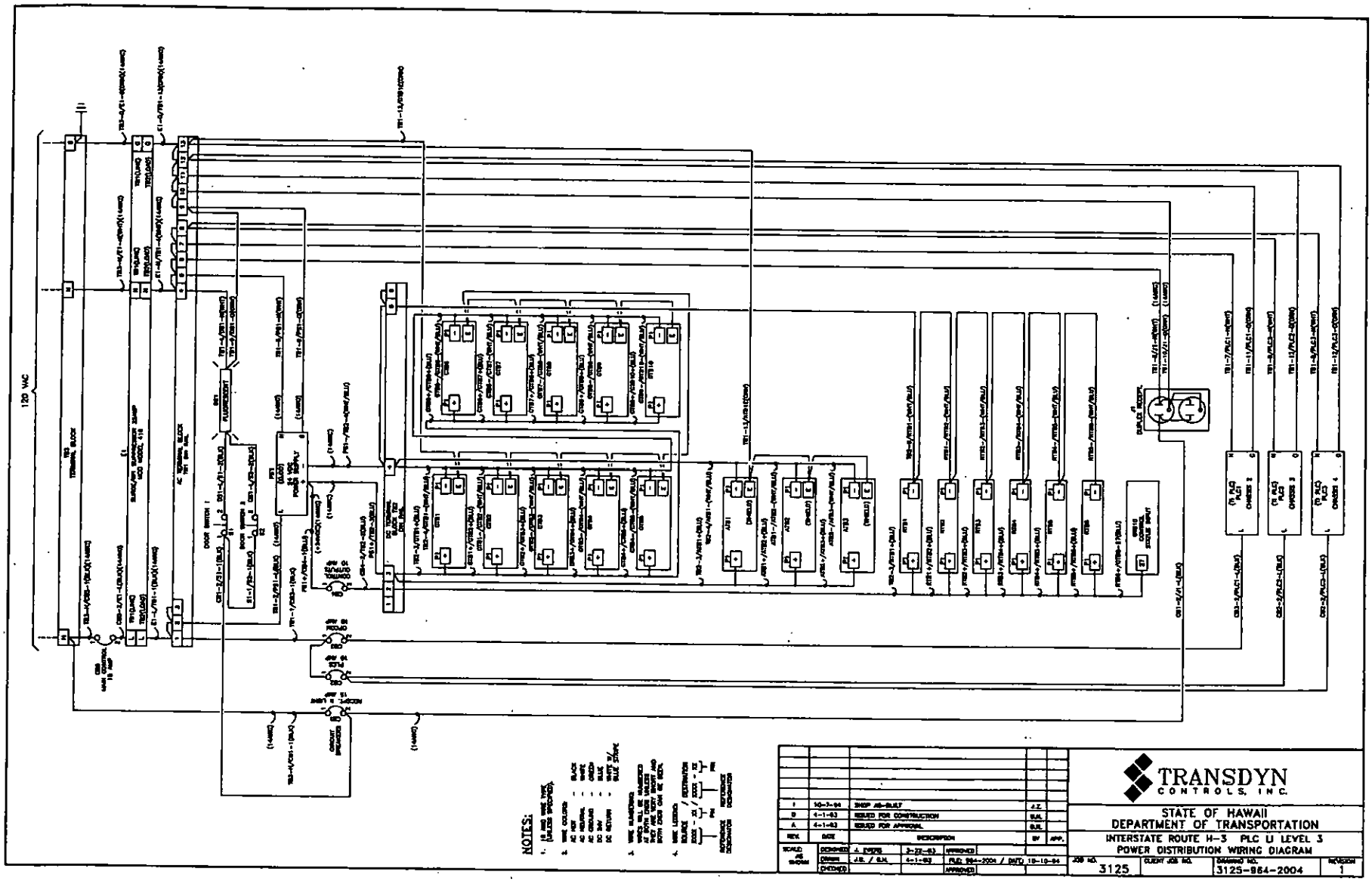
120 VAC
TRANSDYN
CONTROLS, INC.
STATE OF HAWAII
DEPARTMENT OF TRANSPORTATION
INTERSTATE ROUTE H-3 PLC U LEVEL 3
POWER DISTRIBUTION WIRING DIAGRAM
3125
3125-964-2004
1
NOTES:

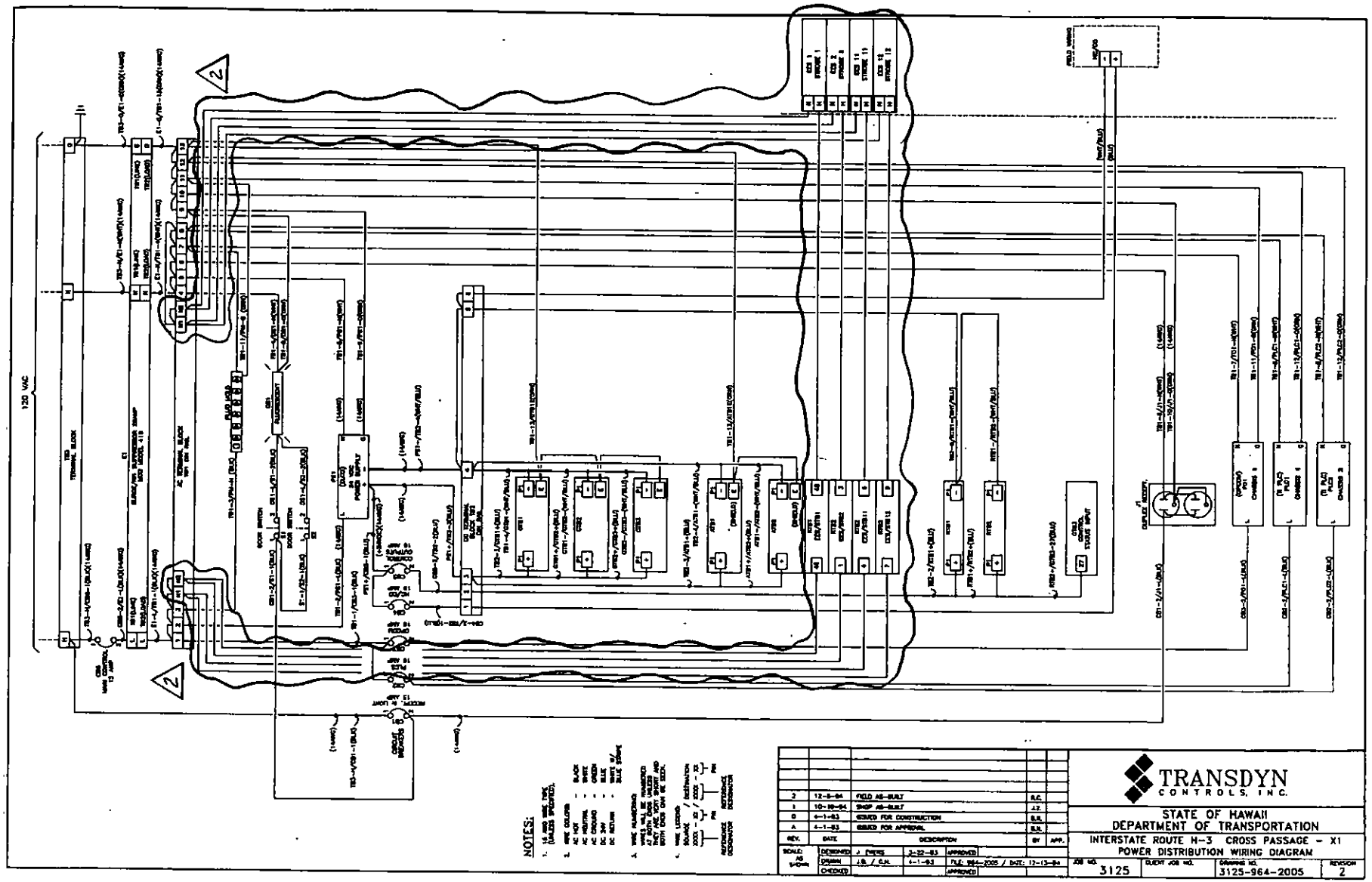

NOTES:

1. 14 AWG WIRE TYPE (UNLESS SPECIFIED).
2. WIRE COLORS
   - AC HOT = BLACK
   - AC NEUTRAL = WHITE
   - AC GROUND = GREEN
   - DC 24V = BLUE
   - DC RETURN = WHITE W/ BLUE STRIPE
3. WIRE NUMBERING
   WIRES WILL BE NUMBERED AT BOTH ENDS WITH THE SAME NUMBER. THE WIRE WILL START WITH BOTH ENDS OAN WIRE EXCL.
4. WIRE LEGEND
   SOURCE / DESTINATION
   XXXX - XX / XXXX - XX
   PN
   SOURCE REFERENCE DESTINATION

REV.	DATE	DESCRIPTION	BY	APP.
2	12-5-94	FIELD AS-BUILT	R.C.	
1	10-10-94	SHOP AS-BUILT	J.Z.	
0	4-1-93	ISSUED FOR CONSTRUCTION	B.R.	
A	4-1-93	ISSUED FOR APPROVAL	B.R.	

SCALE: AS SHOWN
DESIGNED: J. PARKS 3-22-93 APPROVED
DRAWN: J.B. / D.H. 4-1-93 FILE: 964-2005 / DATE: 12-13-94
CHECKED: APPROVED

TRANSDYN CONTROLS, INC.

STATE OF HAWAII
DEPARTMENT OF TRANSPORTATION
INTERSTATE ROUTE H-3 CROSS PASSAGE - X1
POWER DISTRIBUTION WIRING DIAGRAM

JOB NO. 3125 | CLIENT JOB NO. | DRAWING NO. 3125-964-2005 | REVISION 2

EQUIPMENT ELEVATION

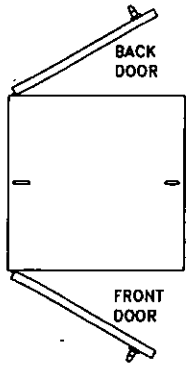

NAMEPLATE SCHEDULE							
NO.	QTY	1ST LINE DESCRIPTION	2ND LINE DESCRIPTION	3RD LINE DESCRIPTION	TYPE	LETTER SIZE	SIZE
1	1	HAWAII OUTBOUND	FIBER OPTIC HUB 3	LEVEL 2	BLK w/ WHT MESSAGE	1/4"	8" X 3"
2							
3							
4							
5							

LOCATION
HAWAII SUBGUND PORTAL BLDG

BILL OF MATERIAL				
ITEM	QTY	MFR.	PART NO.	DESCRIPTION
1	1	HOFFMAN	A-72E24H72SA	"ENCLOSURE, 72"X24"X36", HDWR 18"
2	1	HOFFMAN	A-72EP24HTS	BACK MTG ANGLES
3	2	HOFFMAN	A-72EP24P1	"BACKPANEL, HALF"
4				
5	1	HOFFMAN	X-LF16018	FLUORESCENT LIGHT STRIP, 18" LAMP
6	2	TRANSDYN	~~	SIDE PANEL 9 1/8" X 31"
7	2	HOFFMAN	A-LF5X3	DOOR SWITCH
8				
9	1	CLCO	P3H1-24	"DC POWER SUPPLY, 24V",336 WATT
10	1	MCE	416	SURGE/RFI SUPPRESSOR
11	2	TI	U-989	PLC BASE
12	1	TI	435 DC-CPU	PLC CPU
13	1	TI	405 DM	DATA COMMUNICATIONS MODULE
14	1	TI	U-144	UNIBUS CABINBUSE
15	1	TI	405 DC IO EX	LOCAL TO EXPANSION
16	1	JMP	~~	POWER CORD BLK 4"
17	A/R	PANDUIT	TYPE E	PLASTIC WIREWAY
18	3	TI	U-884	32 DIGITAL INPUT MODULE
19	1	TI	U-187	32 DIGITAL OUTPUT MODULE
20	2	FACTS	485-8A3C	8 ANALOG INPUT MODULE
21	1	OPCOM	HL4144-1	"CHASSIS, FIBER OPTIC LAN"
22	1	OPCOM	HL4441	POWER SUPPLY
23	1	OPCOM	HL4143	FIBER OPTIC CONTROL CARD
24	2	OPCOM	HL4140	RS232 DROP CARD
25	1	OPCOM	HL4420	RS485 MULTI-DROP CARD
26	6	SQUARE D	QOU115	CIRCUIT BREAKER, 15 AMP
27	1	TBB	TBB	DUPLEX RECEPTACLE
28	AR	PANDUIT	E20X6L66	"WIREWAY, 6" WIDE X 2" HIGH"
29	3	POLYBUS	ETB2403	GENERAL TERMINAL BLOCK
30	2	POLYBUS	RTB2403	RELAY TERMINAL BLOCK
31	2	POLYBUS	ATB2405	ANALOG TERMINAL BLOCK
32	AR	EXTRELEC	160310.10	HTS RAIL
33	22	EXTRELEC	115116.07	TERMINAL BLOCK
34	3	EXTRELEC	110260.16	END SECTION
35	4	EXTRELEC	110240.26	END STOP
36	1	TRANSDYN	~~	4-PLUG OUTLET STRIP
37	3	SQUARE D	QOU110	CIRCUIT BREAKER, 10 AMP
38	1	BICC	401-000-000	TBP TERMINATION CABINET
39	1	BICC	463-000-000	SPLICE SHELF
40	1	BICC	TBD	CABLE STORAGE
41	1	TRANSDYN	~~	F.O.N. BRACKET

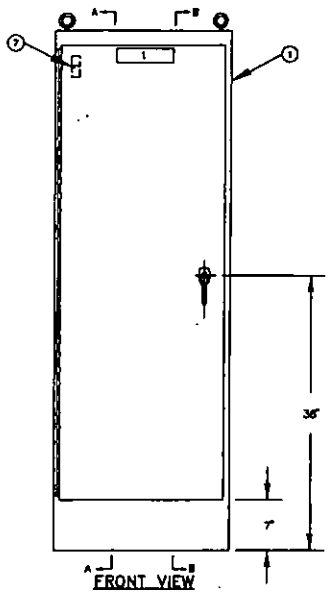

FRONT VIEW

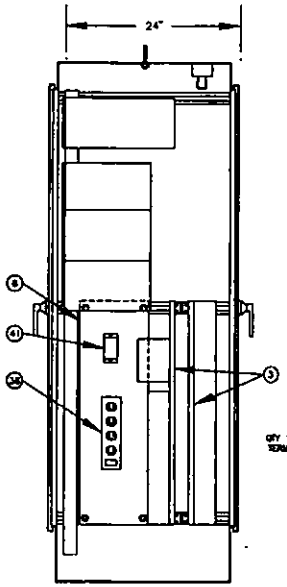

SECTION A-A

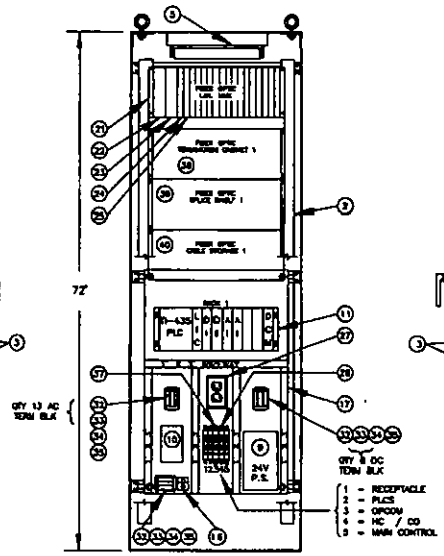

FRONT SECTION VIEW

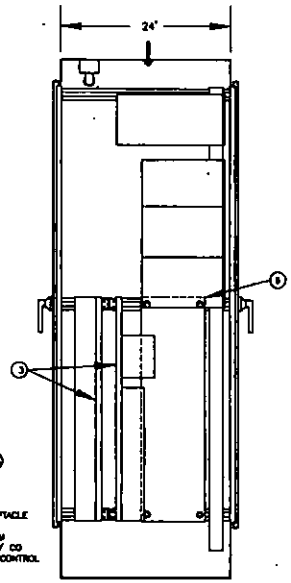

SECTION B-B

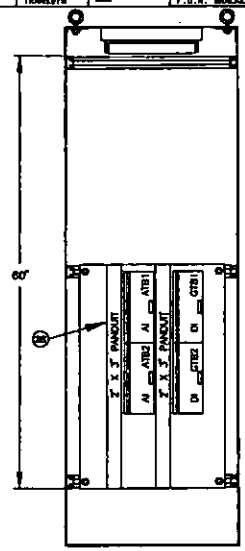

BACK SECTION VIEW

NOTES

1.) FOR TI MODULE LOCATION REFER TO BLOCK DIAGRAM DRAWING: 3125-964-0002

2.) FOR POWER DISTRIBUTION WIRING DIAGRAM REFER TO DRAWING: 3125-964-2001

REV.	DATE:	DESCRIPTION	BY	APP.
1	10/5/94	SHOP AS-BUILT	J.Z.	CH.A.
B	5/27/93	SPLICE CABINETS	G.H.	J.E.
A	3/31/93	8 AI MODULES	G.H.	J.E.

DRAWN BY	DAVID DREYER	APPR. BY	
DESIGN BY	JOHN EWERS	APPR. BY	
CHECK BY	JOHN EWERS	APPR. BY	

DATE: 3-4-1993 FILE: 964-3001 / DATE: 01-19-95

TRANSDYN CONTROLS, INC.

H-3 TRANS-KOOLAU TUNNEL
TI PLC & OPCOM
EQUIPMENT ELEVATION
PLC-LO LEV2

JOB NO. 3125
CLIENT JOB NO.
SCALE 1/16" = 1"
SHT 1 OF 1
DRAWING NO. 3125-964-3001

EQUIPMENT ELEVATION

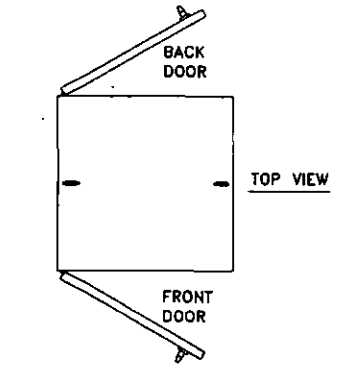

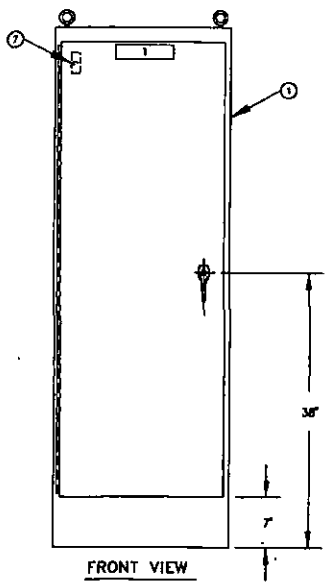

FRONT VIEW

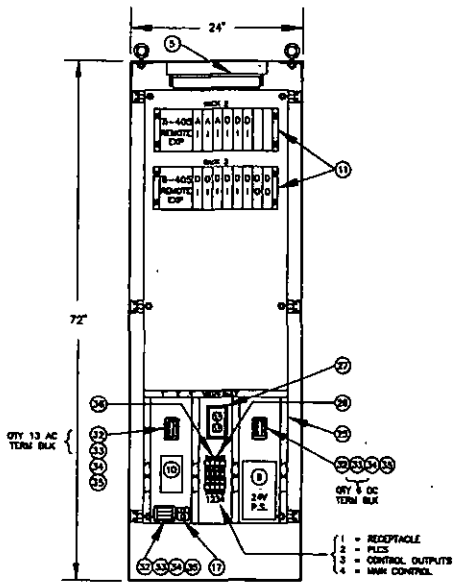

FRONT SECTION VIEW

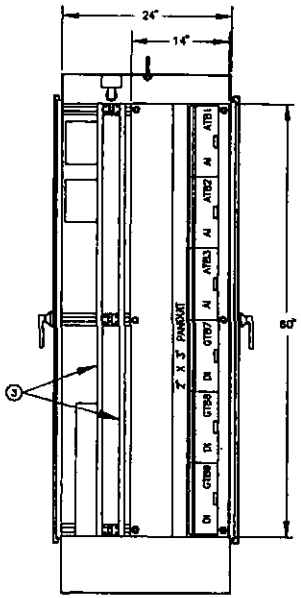

LEFT SIDE SECTION VIEW

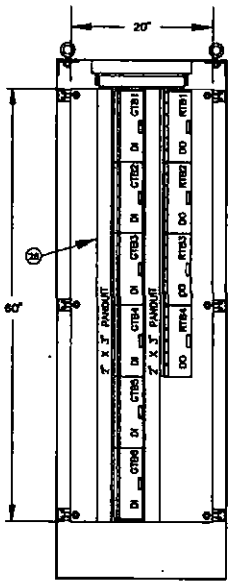

BACK SECTION VIEW

NAMEPLATE SCHEDULE

NO.	QTY	1ST LINE INSCRIPTION	2ND LINE INSCRIPTION	TYPE	LETTER HGT	SIZE
1	1	HAUNA OUTBOUND	LEVEL 3	BLK W/ WHT LETTERS	1/4"	6" X 3"
2				BLK W/ WHT LETTERS	1/4"	6" X 3"
3						
4						
5						

LOCATION

HAUNA OUTBOUND PORTAL BLDG

BILL OF MATERIAL

ITEM	QTY	MFR.	PART NO.	DESCRIPTION
1	1	HOFFMAN	A-72X24X12SDA	"ENCLOSURE, 72"X24"X24"", HDMA 12"
2				
3	2	HOFFMAN	A-72PBMF1	"BACKPANEL, FULL"
4	1	HOFFMAN	A24PBMF14	"SIDEPANEL, FULL"
5	1	HOFFMAN	X-LF16010	FLUORESCENT LIGHT STRIP, 18" LAMP
6				
7	2	HOFFMAN	A-LSSW1	DOOR SWITCH
8				
9	1	ELCO	K16WA-E4	"DC POWER SUPPLY, 24V",100 WATT
10	1	ADC	416	SURGE/RFI SUPPRESSOR
11	2	TI	U-DM8	PLC BASE
12				
13				
14				
15				
16	2	TI	405 DC RIC	REMOTE IO EXPANSION
17	1	JMP	—	POWER END BUS 4"
18	8	TI	U-DM8	32 DIGITAL INPUT MODULE
19	2	TI	U-18T	32 DIGITAL OUTPUT MODULE
20	3	FACTS	405-BASIC	8 ANALOG INPUT MODULE
21				
22				
23				
24				
25	A/R	PANDUIT	TYPE E	PLASTIC WIREWAY
26	2	SQUARE D	QO115	CIRCUIT BREAKER, 15 AMP
27	1	TIB	T20	SUPLEX RECEPTACLE
28	AR	PANDUIT	T38	"WIREWAY, 2" WIDE X 3" HIGH"
29	9	POLYBUS	ETB2405	GENERAL TERMINAL BLOCK
30	4	POLYBUS	RTB2405	RELAY TERMINAL BLOCK
31	9	POLYBUS	ATB2405	ANALOG TERMINAL BLOCK
32	AR	ENTRELEC	168340.10	RTG RAIL
33	22	ENTRELEC	115116.07	TERMINAL BLOCK
34	3	ENTRELEC	118368.16	END SECTION
35	6	ENTRELEC	180802.06	END STOP
36	2	SQUARE D	QO110	CIRCUIT BREAKER, 10 AMP

NOTES

1.) FOR TI MODULE LOCATION REFER TO BLOCK DIAGRAM DRAWING: 3125-964-0002

2.) FOR POWER DISTRIBUTION WIRING DIAGRAMS REFER TO DRAWINGS: 3125-964-2011(KO LEV3) 3125-964-2002(LO LEV3)

REV.	DATE:	DESCRIPTION	BY	APP.
1	10/5/94	SHOP AS-BUILT	J.Z.	CH.A.
B	5/27/93	CABINET SIZE	G.N.	J.E.
A	3/31/93	8 AI MODULES	G.N.	J.E.

DRAWN BY	DAVID DREYER	APPR. BY	
DESIGN BY	JOHN EMERS	APPR. BY	
CHECK BY	JOHN EMERS	APPR. BY	

DATE: 3-3-1993 FILE: 964-3002 / DATE: 01-19-95

TRANSDYN CONTROLS, INC.

H-3 TRANS-KOOLAU TUNNEL
TI PLC
EQUIPMENT ELEVATION
PLC-LO LEV3

JOB NO. 3125
CLIENT JOB NO.
SCALE 1/16" = 1"
SHT 1 OF 1
DRAWING NO. 3125-964-3002

EQUIPMENT ELEVATION

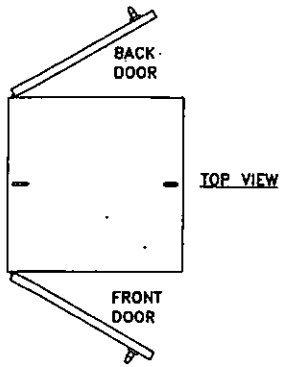

NAMEPLATE SCHEDULE						
NO.	QTY	1ST LINE DESCRIPTION	2ND LINE DESCRIPTION	3RD LINE DESCRIPTION	TYPE	SIZE
1	1	HAWAII GROUND	FIBER OPTIC HUB 4	LEVEL 2	BLACK ON WHITE LAMINATE	1/4" 8" X 2"
2						
3						
4						
5						

LOCATION
HAWAII GROUND FORCE BLDG

BILL OF MATERIAL

ITEM	QTY	MFR.	PART NO.	DESCRIPTION
1	1	HOFFMAN	A-72242424SSA	"ENCLOSURE, 72"X24"X24", NEMA 12"
2	1	HOFFMAN	A-72SPE4FS	BACK MTG ANGLES
3	2	HOFFMAN	A-72PE4F1	"PANEL, HALF"
4	2	TRANSDYN	—	SIDE PANEL 9 1/4" X 21"
5	1	HOFFMAN	H-LF16D10	FLUORESCENT LIGHT STRIP, 18" LAMP
6	1	TRANSDYN	—	F.O.H. BRACKET
7	2	HOFFMAN	A-LF2VS	DOOR SWITCH
8	1	TRANSDYN	—	4-PLUG OUTLET STRIP
9	1	ELCO	P288-24	"DC POWER SUPPLY, 24V".336 WATT
10	1	MCG	416	SURGE/RFI SUPPRESSOR
11	2	TI	U-903	PLC BASE
12	1	TI	420 DC-CPU	PLC CPU
13	1	TI	485 SM	DATA COMMUNICATIONS MODULE
14	1	TI	G-1AM	LYPMON CARTRIDGE
15	1	TI	480 DC 10 EX	LOCAL IO EXPANSION
16	1	JMP	—	POWER CORD BLUE 4'
17	A/R	PANDUIT	TYPE E	PLASTIC WIREWAY
18	3	TI	U-DSM	32 DIGITAL INPUT MODULE
19	1	TI	U-1DT	32 DIGITAL OUTPUT MODULE
20	2	FACTS	400-8AIC	8 ANALOG INPUT MODULE
21	1	OPCOM	HL4440-1	"CHASSIS, FIBER OPTIC LAN"
22	1	OPCOM	HL4401	POWER SUPPLY
23	1	OPCOM	HL4402	FIBER OPTIC CONTROL CARD
24	2	OPCOM	HL4405	RS232 DROP CARD
25	1	OPCOM	HL4404	RS485 MULTI-DROP CARD
26	2	SQUARE D	QOU115	CIRCUIT BREAKER, 15 AMP
27	1	TBD	TBD	DUPLEX RECEPTACLE
28	AR	PANDUIT	CEXLCG4	"WIREWAY, 6" WIDE X 2" HIGH"
29	3	POLYRUS	GTB2485	GENERAL TERMINAL BLOCK
30	2	POLYRUS	RTB2485	RELAY TERMINAL BLOCK
31	1	POLYRUS	ATB2485	ANALOG TERMINAL BLOCK
32	AR	ENTRELEC	168540.12	MTG RAIL
33	22	ENTRELEC	115116.07	TERMINAL BLOCK
34	3	ENTRELEC	168560.16	END SECTION
35	6	ENTRELEC	163690.06	END STOP
36				
37	3	SQUARE D	QOU115	CIRCUIT BREAKER, 15 AMP
38	1	BICC	481-680-000	72P TERMINATION CABINET
39	1	BICC	463-680-000	SPLICE SHELF
40	1	BICC	TBD	CABLE STORAGE
41				

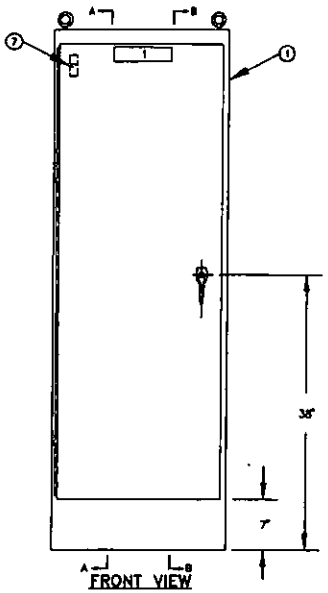

FRONT VIEW

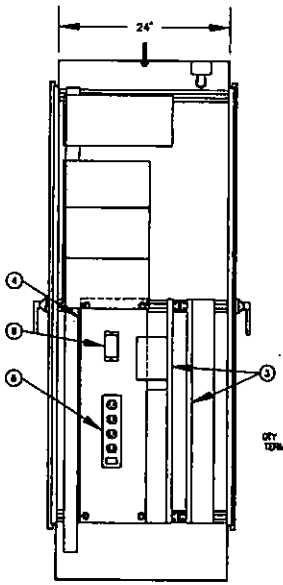

SECTION A-A

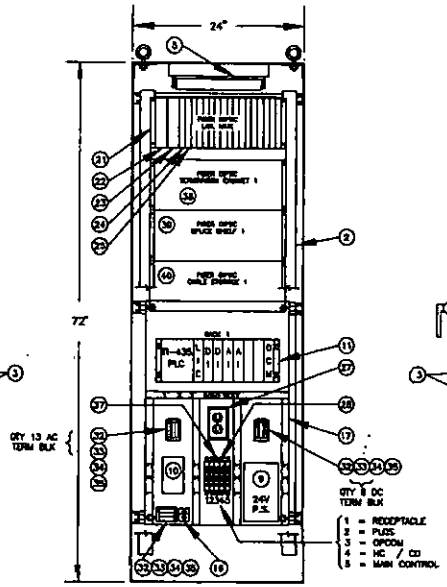

FRONT SECTION VIEW

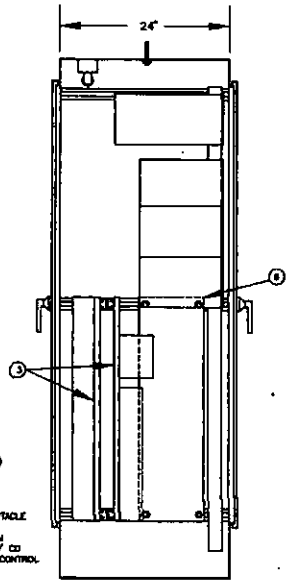

SECTION B-B

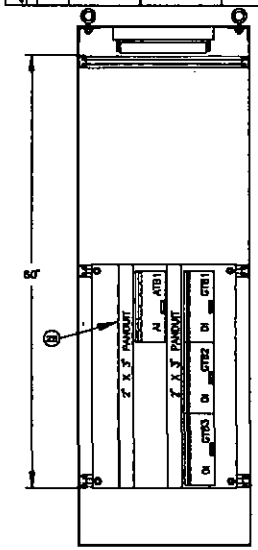

BACK SECTION VIEW

NOTES

1.) FOR TI MODULE LOCATION REFER TO BLOCK DIAGRAM DRAWING: 3125-964-0002

2.) FOR POWER DISTRIBUTION WIRING DIAGRAM REFER TO DRAWING: 3125-964-2003

REV.	DATE:	DESCRIPTION	BY	APP.
1	10/5/94	SHOP AS-BUILT	J.Z.	CH.A.
B	5/27/93	SPLICE CABINETS	G.N.	J.E.
A	3/31/93	8 AI MODULES	G.N.	J.E.

DRAWN BY	DAVID DREYER	APPR. BY	
DESIGN BY	JOHN EWERS	APPR. BY	
CHECK BY	JOHN EWERS	APPR. BY	
DATE: 3-4-1993		FILE: 964-3003 / DATE: 01-19-95	

TRANSDYN CONTROLS, INC.

H-3 TRANS-KOOLAU TUNNEL
TI PLC & OPCOM
EQUIPMENT ELEVATION
PLC-LI LEV2

JOB NO. 3125
CLIENT JOB NO.
SCALE 1/16" = 1"
SHT 1 OF 1
DRAWING NO. 3125-964-3003

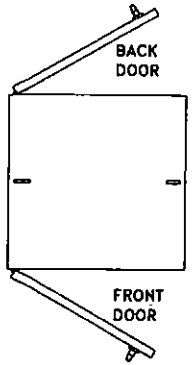

TOP VIEW

EQUIPMENT ELEVATION

NAMEPLATE SCHEDULE					
NO.	QTY	1ST LINE DESCRIPTION	2ND LINE DESCRIPTION	TYPE	SIZE
1	1	HAUBA BRIDGE	LEVEL 3		4" x 4"
2					
3					
4					
5					

LOCATION
HAUBA BRIDGE PORTAL BLDG

BILL OF MATERIAL

ITEM	QTY	MFR.	PART NO.	DESCRIPTION
1	1	HOFFMAN	A-7090WWFSDA	"ENCLOSURE, 78"X24"X24"", NEMA 12"
2				
3	2	HOFFMAN	A-72P24W1	"BACKPANEL, FULL"
4	2	HOFFMAN	A-72SP24	"SUBPANEL, FULL"
5	1	HOFFMAN	X-LF16318	FLUORESCENT LIGHT STRIP, 18" LAMP
6				
7	2	HOFFMAN	A-LFSV3	DOOR SWITCH
8				
9	1	CLCD	61314-04	"DC POWER SUPPLY, 24V",150 WATT
10	1	MOV	416	SURGE/RFI SUPPRESSOR
11	3	TI	U-080	PLC BASE
12				
13				
14				
15				
16	3	TI	405 DC REC	REMOTE IO EXPANSION
17	1	AMP	—	POWER CHB BUS 4"
18	10	TI	U-088	32 DIGITAL INPUT MODULE
19	3	TI	U-187	32 DIGITAL OUTPUT MODULE
20	3	FACTS	405-8ADC	8 ANALOG INPUT MODULE
21				
22				
23				
24				
25	A/R	PANDUIT	TYPE C	PLASTIC WIREWAY
26	2	SQUARE D	QOU115	CIRCUIT BREAKER, 15 AMP
27	1	TRD	TRD	DUPLEX RECEPTACLE
28	AR	PANDUIT	E2X3LG6	"WIREWAY, 2" WIDE X 3" HIGH"
29	18	POLYBUS	OTB2405	GENERAL TERMINAL BLOCK
30	6	POLYBUS	RTB2405	RELAY TERMINAL BLOCK
31	9	POLYBUS	ATB2405	ANALOG TERMINAL BLOCK
32	AR	ENTRELOC	1A0369.12	RTD RAIL
33	22	ENTRELOC	119116.07	TERMINAL BLOCK
34	9	ENTRELOC	118368.16	END SECTION
35	4	ENTRELOC	1B3968.24	END STOP
36	3	SQUARE D	QOU110	CIRCUIT BREAKER, 10 AMP

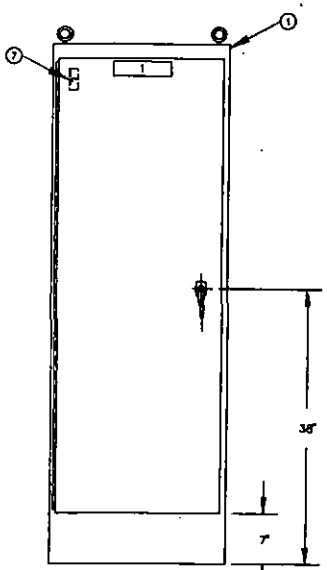

FRONT VIEW

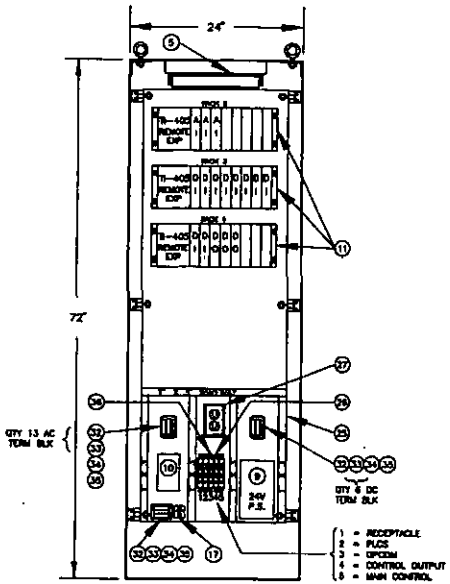

FRONT SECTION VIEW

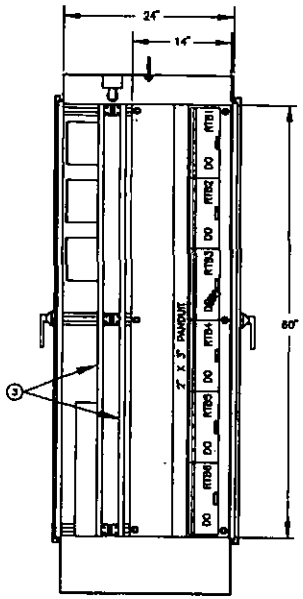

LEFT SIDE SECTION VIEW

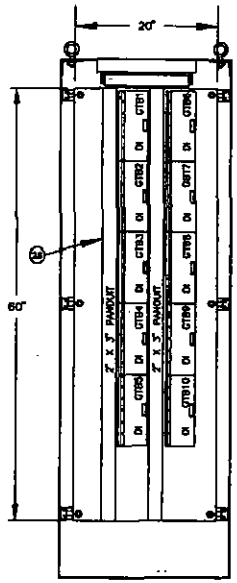

BACK SECTION VIEW

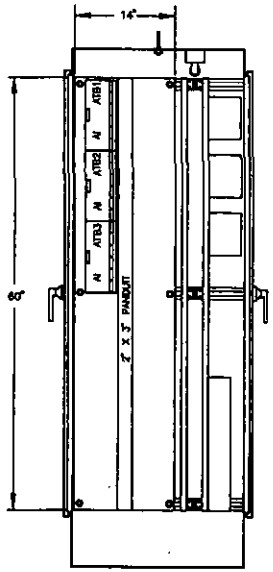

RIGHT SIDE SECTION VIEW

NOTES

1.) FOR TI MODULE LOCATION REFER TO BLOCK DIAGRAM DRAWING: 3125-964-0002

2.) FOR POWER DISTRIBUTION WIRING DIAGRAM REFER TO DRAWING: 3125-964-2004

REV.	DATE:	DESCRIPTION	BY	APP.
1	10/5/94	SHOP AS-BUILT	J.Z.	CH.A.
B	5/27/93	CABINET SIZE	G.H.	J.E.
A	3/31/93	8 AI MODULES	G.H.	J.E.

DRAWN BY	DAVID DREYER	APPR. BY	
DESIGN BY	JOHN EWERS	APPR. BY	
CHECK BY	JOHN EWERS	APPR. BY	
DATE: 3-3-1993	FILE: 964-3004 / DATE: 01-19-95		

TRANSDYN CONTROLS INC.

H-3 TRANS-KOOLAU TUNNEL
TI PLC
EQUIPMENT ELEVATION
PLC-LI LEV3

JOB NO. 3125
CLIENT JOB NO.
SCALE 1/16" = 1"
SHT 1 OF 1
DRAWING NO. 3125-964-3004

EQUIPMENT ELEVATION

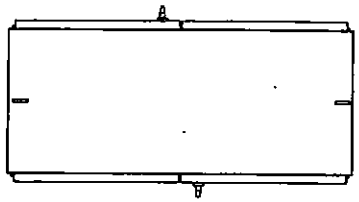

TOP VIEW

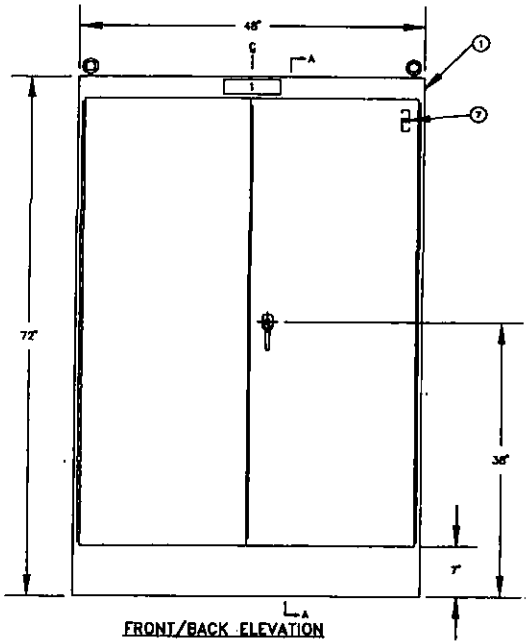

FRONT/BACK ELEVATION

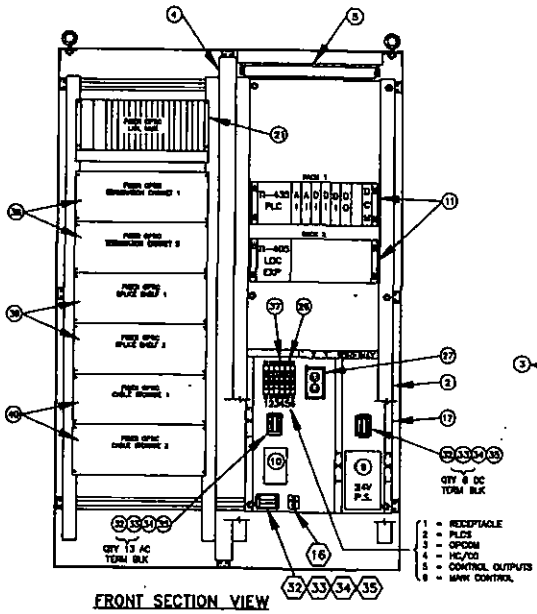

FRONT SECTION VIEW

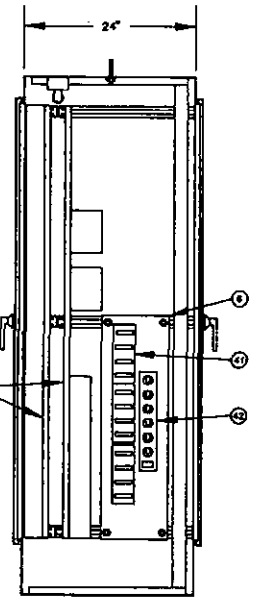

SECTION A-A

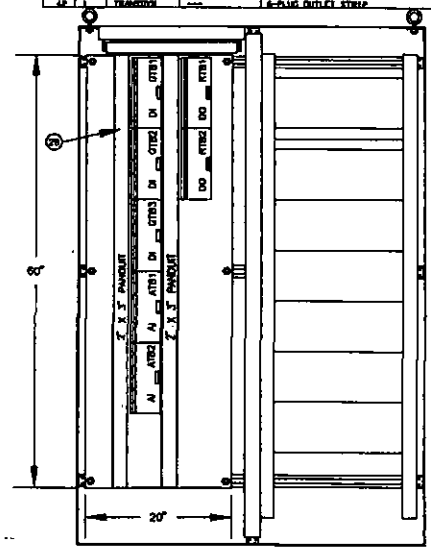

BACK SECTION VIEW

NAMEPLATE SCHEDULE

NO.	QTY	1ST LINE DESCRIPTION	2ND LINE DESCRIPTION	TYPE	LETTER HEIGHT	SIZE
1	1	CROSS PASSAGE 1	FIBER OPTIC HUB 4	BLK W/ WHT LETTERS	1/4"	4" X 2"
2						
3						
4						
5						

BILL OF MATERIAL

ITEM	QTY	MFR.	PART NO.	DESCRIPTION
1	1	HOFFMAN	A-72X48H[illegible]	VIDCLOSURE, 72"X48"X34", NEMA 12"
2	2	HOFFMAN	A-72[illegible]	RACK MTG ANGLE
3	2	HOFFMAN	A-72P[illegible]	"BACKPANEL, FULL"
4	3	HOFFMAN	A-72[illegible]	CENTER PANEL SUPPORT
5	1	HOFFMAN	X-LF16[illegible]	FLUORESCENT LIGHT STRIP, 18" LAMP
6	1	TRANSDYN	—	SIDE PANEL 9 1/2" X 31"
7	2	HOFFMAN	A-LF[illegible]	DOOR SWITCH
8				
9	1	ELCO	P300-24	"DC POWER SUPPLY, 24V",336 WATT
10	1	MOV	416	SURGE/RFI SUPPRESSOR
11	2	TI	U-[illegible]	PLC BASE
12	1	TI	435 DC-CPU	PLC CPU
13	1	TI	410 DM	DATA COMMUNICATIONS MODULE
14	1	TI	U-140	EPROM CARTRIDGE
15	1	TI	410 DC IO EX	LOCAL IO EXPANSION
16	1	JMP	—	POWER CRO BUS 4"
17	A/R	PANDUIT	TYPE E	PLASTIC WIREWAY
18	3	TI	U-[illegible]	32 DIGITAL INPUT MODULE
19	1	TI	U-[illegible]	32 DIGITAL OUTPUT MODULE
20	2	FACTS	403-8AIC	8 ANALOG INPUT MODULE
21	1	OPCOM	KL4440-1	"CHASSIS, FIBER OPTIC LAN"
22	1	OPCOM	KL4401	POWER SUPPLY
23	1	OPCOM	KL4410	FIBER OPTIC CONTROL CARD
24	8	OPCOM	KL4410	RS232 DROP CARD
25	1	OPCOM	KL4420	RS485 MULTI-DROP CARD
26	2	SQUARE D	QOU115	CIRCUIT BREAKER, 15 AMP
27	1	TRD	TRD	DUPLEX RECEPTACLE
28	AR	PANDUIT	E2X6LG6	"WIREWAY, 2" WIDE X 3" HIGH"
29	3	POLYBAR	ST20245	GENERAL TERMINAL BLOCK
30	2	POLYBAR	RT20245	RELAY TERMINAL BLOCK
31	2	POLYBAR	AT20245	ANALOG TERMINAL BLOCK
32	AR	ENTRELOC	16[illegible].12	MTG RAIL
33	22	ENTRELOC	113116.07	TERMINAL BLOCK
34	3	ENTRELOC	118968.16	END SECTION
35	6	ENTRELOC	103108.06	END STOP
36				
37	4	SQUARE D	QOU110	CIRCUIT BREAKER, 10 AMP
38	2	BICC	481-940-048	TSP TERMINATION CABINET
39	2	BICC	463-940-088	SPLICE SHELF
40	2	BICC	TSD	CABLE STORAGE
41	2	LAZY	KD-3	SPLITTER BOX
42	1	TRANSDYN	—	6-PLUG OUTLET STRIP

NOTES

1.) FOR TI MODULE LOCATION REFER TO BLOCK DIAGRAM DRAWING: 3125-964-0002

2.) FOR POWER DISTRIBUTION WIRING DIAGRAMS REFER TO DRAWINGS: 3125-964-2005(X1) 3125-964-2006(X3) 3125-964-2008(X7)

REV.	DATE:	DESCRIPTION	BY	APP.
1	10/5/94	SHOP AS-BUILT	J.Z.	CH.A.
B	5/27/93	SPLICE CABINETS	G.N.	J.E.
A	3/31/93	8 AI MODULES	G.N.	J.E.

DRAWN BY	DAVID DREYER	APPR. BY
DESIGN BY	JOHN EWERS	APPR. BY
CHECK BY	JOHN EWERS	APPR. BY

DATE: 2-22-1993 FILE: 964-3005 / DATE: 01-19-95

TRANSDYN CONTROLS, INC.

H-3 TRANS-KOOLAU TUNNEL
TI PLC & OPCOM
EQUIPMENT ELEVATION
CROSS PASSAGE X1

JOB NO. 3125
CLIENT JOB NO.
SCALE 1/16" = 1"
SHT 1 OF 1
DRAWING NO. 3125-964-3005

EQUIPMENT ELEVATION

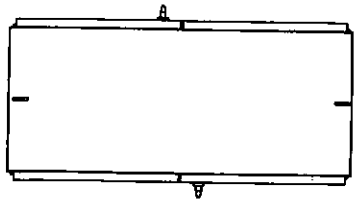

TOP VIEW

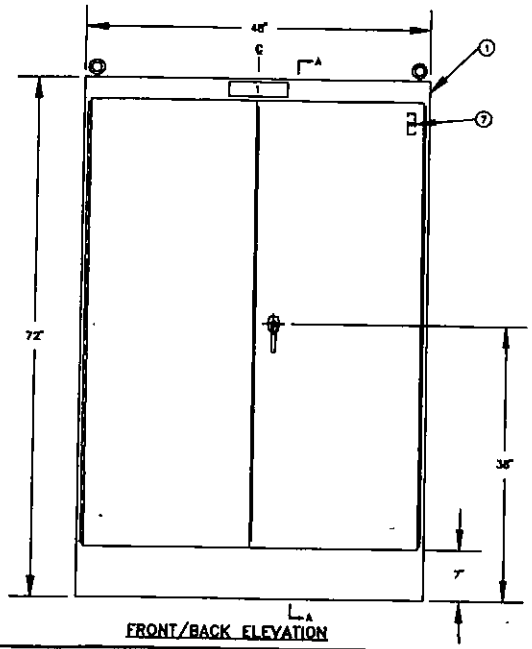

FRONT/BACK ELEVATION

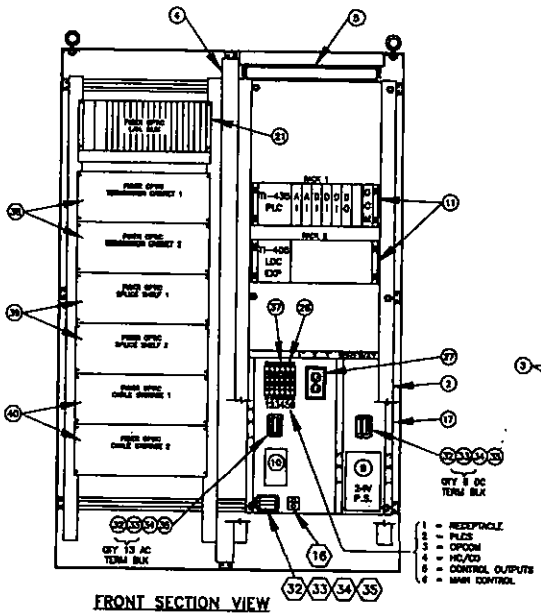

FRONT SECTION VIEW

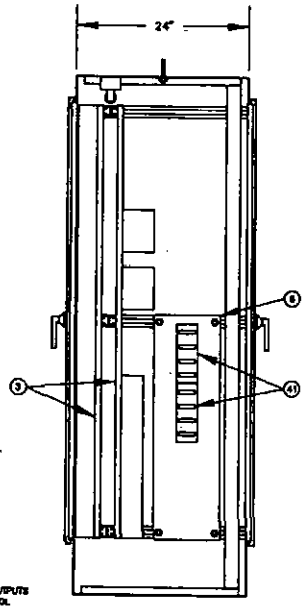

SECTION A-A

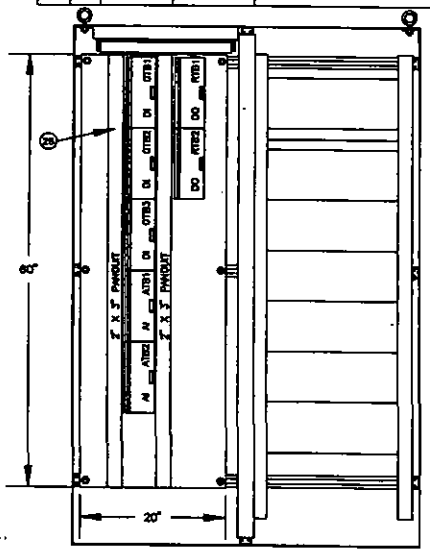

BACK SECTION VIEW

NAMEPLATE SCHEDULE

NO.	QTY	1ST LINE DESCRIPTION	2ND LINE DESCRIPTION	TYPE	LETTER HEIGHT	SIZE
1	1	CROSS PASSAGE 3	FIBER OPTIC HUB 10	Bkn w/ Wht LETTERS	1/4"	8" x 2"
2						
3						
4						
5						

BILL OF MATERIAL

ITEM	QTY	MFR.	PART NO.	DESCRIPTION
1	1	HOFFMAN	A-7848HFIBAS	"ENCLOSURE, 78"X48"X24", NEMA 12"
2	2	HOFFMAN	A-72BP4PS	BACK RTE ANGLE
3	2	HOFFMAN	A-72P4-P1	"BACKPANEL, FULL"
4	3	HOFFMAN	A-72P3SP2	CONTOR PANEL SUPPORT
5	1	HOFFMAN	A-LF16LH	FLUORESCENT LIGHT STRIP, 18" LAMP
6	1	TRANSDYN	----	SIDE PANEL 8 1/2" X 31"
7	2	HOFFMAN	A-LFSVD	DOOR SWITCH
8				
9	1	ELCO	P298-24	"DC POWER SUPPLY, 24V".396 WATT
10	1	MOC	416	SURGE/RFI SUPPRESSOR
11	8	TI	U-DBB	PLC BASE
12	1	TI	435 DC-CPU	PLC CPU
13	1	TI	485 DM	DATA COMMUNICATIONS MODULE
14	1	TI	U-14M	UVPROM CARTRIDGE
15	1	TI	405 DC IO EX	LOCAL IO EXPANSION
16	1	AMP	----	POWER GND BUS 4"
17	A/R	PANDUIT	TYPE E	PLASTIC WIREWAY
18	3	TI	U-DBM	32 DIGITAL INPUT MODULE
19	1	TI	U-16T	32 DIGITAL OUTPUT MODULE
20	2	FACTS	405-8ADC	8 ANALOG INPUT MODULE
21	1	OPCOM	RL4441-1	"CHASSIS, FIBER OPTIC LAN"
22	1	OPCOM	RL4441	POWER SUPPLY
23	1	OPCOM	RL4402	FIBER OPTIC CONTROL CARD
24	2	OPCOM	RL4403	RS232 DROP CARD
25	1	OPCOM	RL4421	RS485 MULTI-DROP CARD
26	2	SQUARE D	QOU115	CIRCUIT BREAKER, 15 AMP
27	1	TBD	TBD	DUPLEX RECEPTACLE
28	AR	PANDUIT	E20X12L06	"WIREWAY, 2" WIDE X 3" HIGH"
29	2	POLYRUS	ETB2405	GENERAL TERMINAL BLOCK
30	2	POLYRUS	RTB2405	RELAY TERMINAL BLOCK
31	2	POLYRUS	ATB2405	ANALOG TERMINAL BLOCK
32	AR	ENTRELOC	1WS040.12	RTE RAIL
33	22	ENTRELOC	1TS110.07	TERMINAL BLOCK
34	2	ENTRELOC	1DS060.16	END SECTION
35	6	ENTRELOC	1ES000.06	END STOP
36				
37	4	SQUARE D	QOU110	CIRCUIT BREAKER, 10 AMP
38	2	SICC	483-949-000	FOP TERMINATION CABINET
39	2	SICC	483-949-000	SPLICE SHELF
40	2	SICC	TBD	CABLE STORAGE
41	2	CNZY	KS-2	SPLITTER BOX

NOTES

1.) FOR TI MODULE LOCATION REFER TO BLOCK DIAGRAM DRAWING: 3125-964-0002

2.) FOR POWER DISTRIBUTION WIRING DIAGRAMS REFER TO DRAWINGS: 3125-964-2005(X1) 3125-964-2006(X3) 3125-964-2008(X7)

REV.	DATE:	DESCRIPTION	BY	APP.
1	10/5/94	SHOP AS-BUILT	J.Z.	CH.A.
B	5/27/93	SPLICE CABINETS	G.N.	J.E.
A	3/31/93	8 AI MODULES	G.N.	J.E.

DRAWN BY: DAVID DREYER — APPR. BY:
DESIGN BY: JOHN EWERS — APPR. BY:
CHECK BY: JOHN EWERS — APPR. BY:
DATE: 2-22-1993 — FILE: 964-3006 / DATE: 01-19-95

TRANSDYN CONTROLS, INC.

H-3 TRANS-KOOLAU TUNNEL
TI PLC & OPCOM
EQUIPMENT ELEVATION
CROSS PASSAGE X3

JOB NO. 3125
CLIENT JOB NO.
SCALE 1/16" = 1" — SHT 1 OF 1
DRAWING NO. 3125-964-3006

EQUIPMENT ELEVATION

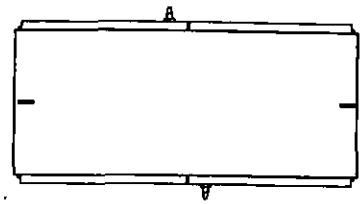

TOP VIEW

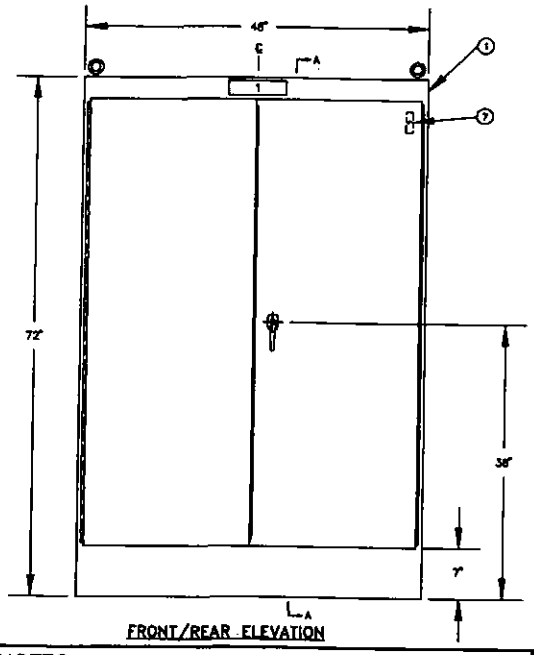

FRONT/REAR ELEVATION

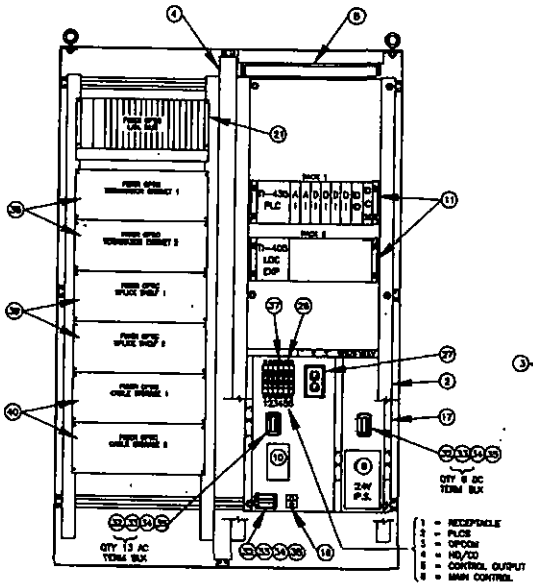

FRONT SECTION VIEW

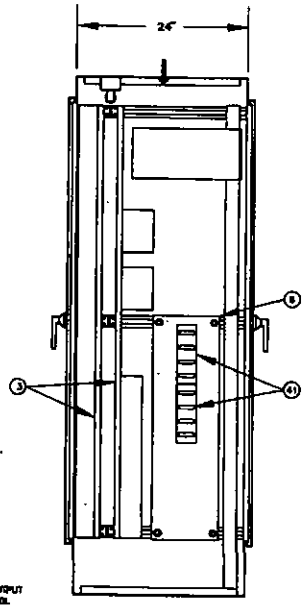

SECTION A-A

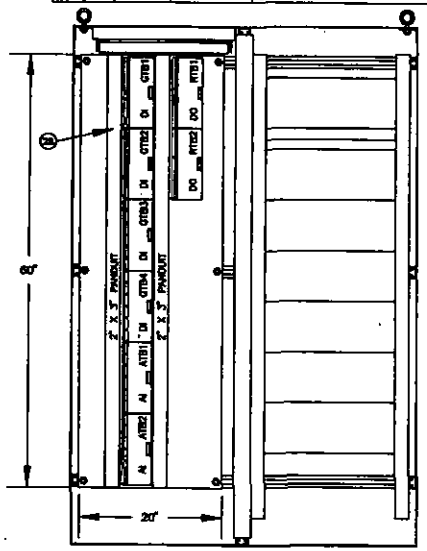

BACK SECTION VIEW

NAMEPLATE SCHEDULE

NO.	QTY	1ST LINE DESCRIPTION	2ND LINE DESCRIPTION	TYPE	LETTER SIZE	SIZE
1	1	CROSS PASSAGE 5	FIBER OPTIC HUB 6	[illegible]	1/4"	8" X 3"
2						
3						
4						
5						

BILL OF MATERIAL

ITEM	QTY	MFR.	PART NO.	DESCRIPTION
1	1	HOFFMAN	A-72X48X[illegible]	"ENCLOSURE, 72"X48"X24", NEMA 12"
2	2	HOFFMAN	A-72SP24F3	BACK RTS ANGLE
3	2	HOFFMAN	A-72P24F1	"BACKPANEL, FULL"
4	3	HOFFMAN	A-72F3CP3	CENTER PANEL SUPPORT
5	1	HOFFMAN	A-LF16U18	FLUORESCENT LIGHT STRIP, 18" LAMP
6	1	TRANSDYN	—	SIDE PANEL 8 1/4" X 31"
7	2	HOFFMAN	A-LF3VD	DOOR SWITCH
8				
9	1	ELCO	P269-24	"DC POWER SUPPLY, 24V".336 WATT
10	1	MCB	416	SURGE/RFI SUPPRESSOR
11	2	TI	U-983	PLC BASE
12	1	TI	430 3C-CPU	PLC CPU
13	1	TI	405 3N	DATA COMMUNICATIONS MODULE
14	1	TI	U-144	VAPROM CARTRIDGE
15	1	TI	405 3C 10 EX	LOCAL IO EXPANSION
16	1	JMP	—	POWER GND BUS 6"
17	A/R	PANDUIT	TYPE C	PLASTIC WIREWAY
18	3	TI	U-989	3X DIGITAL INPUT MODULE
19	1	TI	U-187	3X DIGITAL OUTPUT MODULE
20	6	FACTS	405-8ADC	8 ANALOG INPUT MODULE
21	1	OPCOM	ML4419-1	"CHASSIS, FIBER OPTIC LAN"
22	1	OPCOM	ML4411	POWER SUPPLY
23	3	OPCOM	ML4413	FIBER OPTIC CONTROL CARD
24	2	OPCOM	ML4415	RS232 DROP CARD
25	1	OPCOM	ML4421	RS485 MULTI-DROP CARD
26	2	SQUARE D	QOU115	CIRCUIT BREAKER, 15 AMP
27	1	TRD	TRD	"DUPLEX RECEPTACLE"
28	AR	PANDUIT	C200LG6	"WIREWAY, 2" WIDE X 2" HIGH"
29	3	POLYRAD	GT38403	GENERAL TERMINAL BLOCK
30	6	POLYRAD	RT38403	RELAY TERMINAL BLOCK
31	2	POLYRAD	AT38403	ANALOG TERMINAL BLOCK
32	AR	CONTROLEX	1168340.12	RTS RAIL
33	22	CONTROLEX	1121110.07	TERMINAL BLOCK
34	2	CONTROLEX	1128340.16	END SECTION
35	6	CONTROLEX	1120340.06	END STOP
36	8	CAXY	HB-3	SPLITTER BOX
37	4	SQUARE D	QOU110	CIRCUIT BREAKER, 10 AMP
38	6	BICC	401-040-000	ZEP TERMINATION CABINET
39	2	BICC	402-040-000	SPLICE SHELF
40	2	BICC	TRD	CABLE STORAGE
41	2	CAXY	HB-2	SPLITTER BOX

NOTES

1.) FOR TI MODULE LOCATION REFER TO BLOCK DIAGRAM DRAWING: 3125-964-0002

2.) FOR POWER DISTRIBUTION WIRING DIAGRAM REFER TO DRAWING: 3125-964-2007(X5) 3125-964-2009(X9)

REV.	DATE:	DESCRIPTION	BY	APP.
1	10/5/94	SHOP AS-BUILT	J.Z.	CH.A.
B	5/27/93	SPLICE CABINETS	G.N.	J.E.
A	3/31/93	8 AI MODULES	G.N.	J.E.

DRAWN BY	DAVID DREYER	APPR. BY	
DESIGN BY	JOHN EWERS	APPR. BY	
CHECK BY	JOHN EWERS	APPR. BY	

DATE: 2-22-1993 FILE: 964-3007 / DATE: 01-19-95

TRANSDYN CONTROLS, INC.

H-3 TRANS-KOOLAU TUNNEL
TI PLC & OPCOM
EQUIPMENT ELEVATION
CROSS PASSAGE X5

JOB NO. 3125
CLIENT JOB NO.
SCALE 1/16" = 1"
SHT 1 OF 1
DRAWING NO. 3125-964-3007

EQUIPMENT ELEVATION

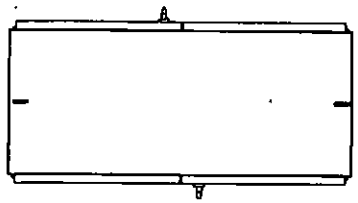

TOP VIEW

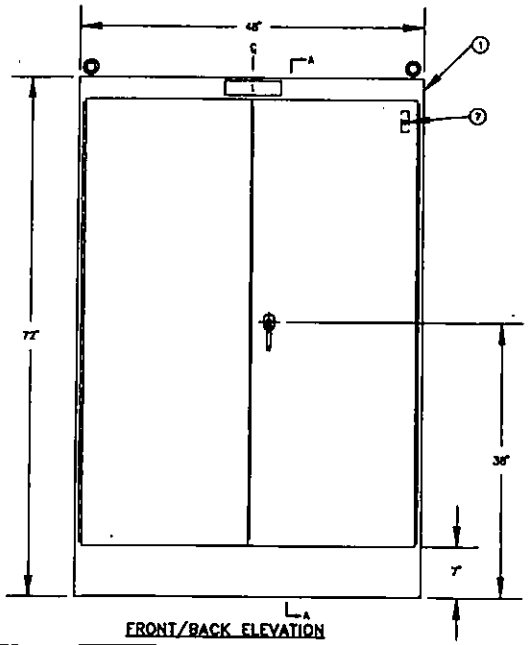

FRONT/BACK ELEVATION

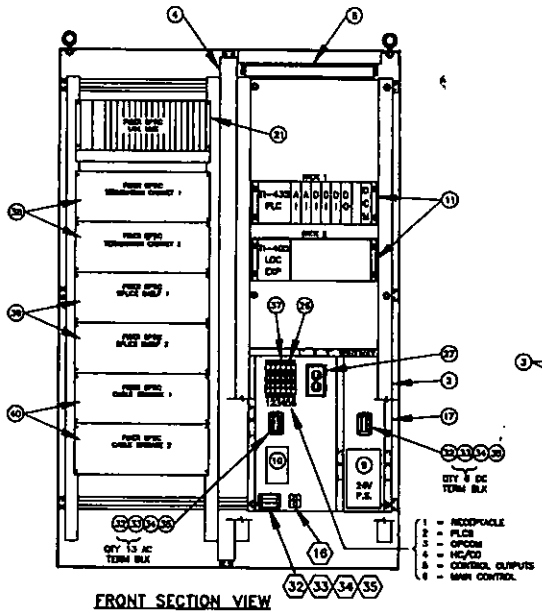

FRONT SECTION VIEW

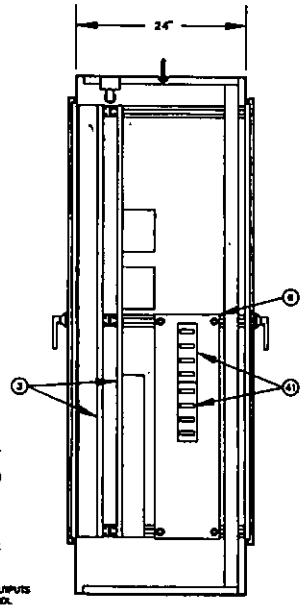

SECTION A-A

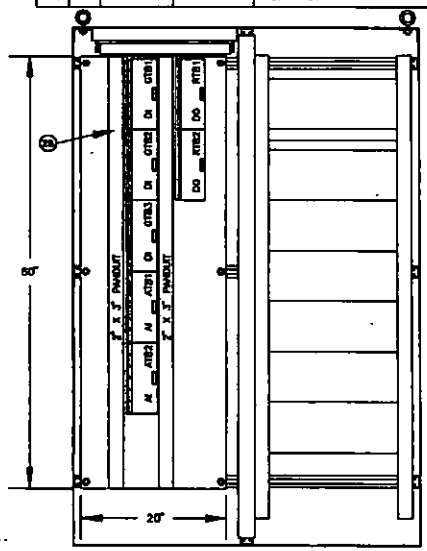

BACK SECTION VIEW

NAMEPLATE SCHEDULE

NO.	QTY	1ST LINE DESCRIPTION	2ND LINE DESCRIPTION	TYPE	WIDTH	BOX
1	1	CROSS PASSAGE 7	PER SPEC NUB 11	[illegible]	1/4"	4" X 2"
2						
3						
4						
5						

BILL OF MATERIAL

ITEM	QTY	MFR.	PART NO.	DESCRIPTION
1	1	HOFFMAN	A-72486WF[illegible]	"ENCLOSURE, 72"X48"X24", WDWA 18"
2	2	HOFFMAN	A-72BPWP[illegible]	BACK WTB ANGLE
3	2	HOFFMAN	A-72P[illegible]	"BACKPANEL, FULL"
4	3	HOFFMAN	A-72F[illegible]	CENTER PANEL SUPPORT
5	3	HOFFMAN	X-LF16[illegible]	FLUORESCENT LIGHT STRIP, 18" LAMP
6	1	TRANSDYN	—	SIDE PANEL 9 1/2" X 31"
7	8	HOFFMAN	A-LF[illegible]	DOOR SWITCH
8				
9	1	CLCO	P360-24	"DC POWER SUPPLY, 24V",336 WATT
10	1	MCG	416	SURGE/RFI SUPPRESSOR
11	8	TI	U-[illegible]	PLC RACK
12	1	TI	435 DC-CPU	PLC CPU
13	1	TI	485 DM	DATA COMMUNICATIONS MODULE
14	1	TI	0-1[illegible]	LAPMON CARTRIDGE
15	1	TI	145 DC 10 CX	LOCAL IO EXPANSION
16	1	JMP	—	POWER ONE SIZE 4"
17	A/R	PANDUIT	TYPE E	PLASTIC WIREWAY
18	2	TI	U-[illegible]	32 DIGITAL INPUT MODULE
19	1	TI	U-[illegible]	32 DIGITAL OUTPUT MODULE
20	2	FACTS	488-[illegible]	8 ANALOG INPUT MODULE
21	1	OPCOM	ML4[illegible]-1	"CHASSIS, FIBER OPTIC LAN"
22	1	OPCOM	ML4[illegible]	POWER SUPPLY
23	1	OPCOM	ML4[illegible]	FIBER OPTIC CONTROL CARD
24	2	OPCOM	ML4[illegible]	RS232 DROP CARD
25	1	OPCOM	ML4[illegible]	RS485 MULTI-DROP CARD
26	2	SQUARE D	[illegible]	CIRCUIT BREAKER, 15 AMP
27	1	TBD	TBD	DUPLEX RECEPTACLE
28	A/R	PANDUIT	[illegible]	"WIREWAY, 2" WIDE X 3" HIGH"
29	3	POLYBUS	[illegible]	GENERAL TERMINAL BLOCK
30	8	POLYBUS	[illegible]	RELAY TERMINAL BLOCK
31	8	POLYBUS	[illegible]	ANALOG TERMINAL BLOCK
32	A/R	INTERLOC	[illegible]	GTO RAIL
33	22	INTERLOC	[illegible]	TERMINAL BLOCK
34	3	INTERLOC	[illegible]	END SECTION
35	6	INTERLOC	[illegible]	END STOP
36				
37	4	SQUARE D	[illegible]	CIRCUIT BREAKER, 10 AMP
38	8	BICC	[illegible]	TWP TERMINATION CABINET
39	8	BICC	[illegible]	SPLICE SHELF
40	2	BICC	TBD	CABLE STORAGE
41	8	CATT	[illegible]	SPLITTER BOX

NOTES

1.) FOR TI MODULE LOCATION REFER TO BLOCK DIAGRAM DRAWING: 3125-964-0002

2.) FOR POWER DISTRIBUTION WIRING DIAGRAMS REFER TO DRAWINGS:
3125-964-2005(X1)
3125-964-2006(X3)
3125-964-2006(X7)

REV.	DATE:	DESCRIPTION	BY	APP.
1	10/3/94	SHOP AS-BUILT	J.Z.	CHLA.
B	5/27/93	SPLICE CABINETS	G.N.	J.E.
A	3/31/93	8 AI MODULES	G.N.	J.E.

DRAWN BY: DAVID DREYER — APPR. BY:
DESIGN BY: JOHN EMERS — APPR. BY:
CHECK BY: JOHN EMERS — APPR. BY:
DATE: 2-22-1993 — FILE: 964-3008 / DATE: 01-18-95

TRANSDYN CONTROLS, INC.

H-3 TRANS-KOOLAU TUNNEL
TI PLC & OPCOM
EQUIPMENT ELEVATION
CROSS PASSAGE X7

JOB NO. 3125
CLIENT JOB NO.
SCALE 1/16" = 1" — SHT 1 OF 1
DRAWING NO. 3125-964-3008

EQUIPMENT ELEVATION

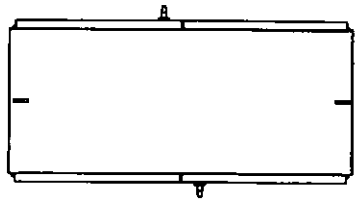

TOP VIEW

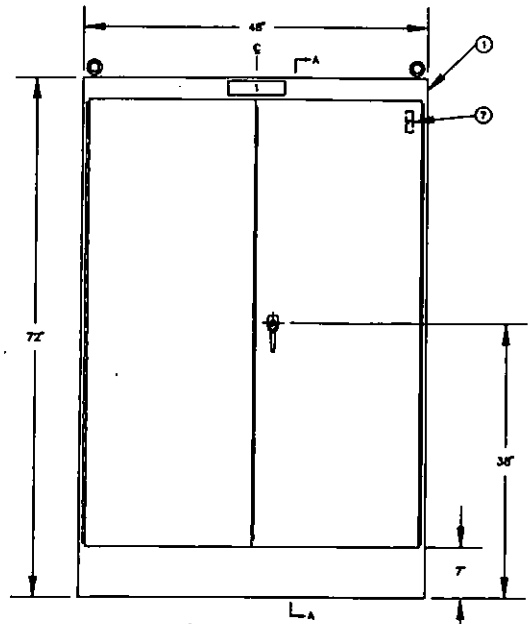

FRONT/REAR ELEVATION

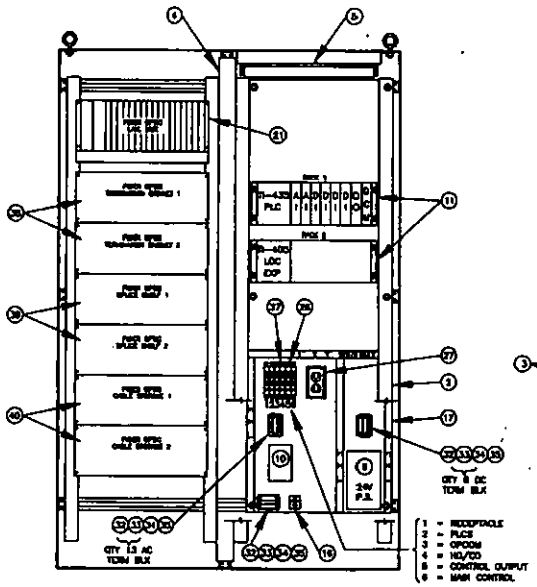

FRONT SECTION VIEW

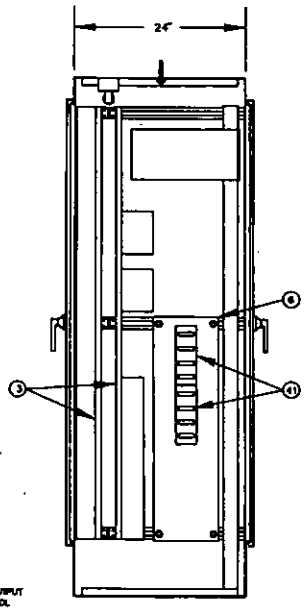

SECTION A-A

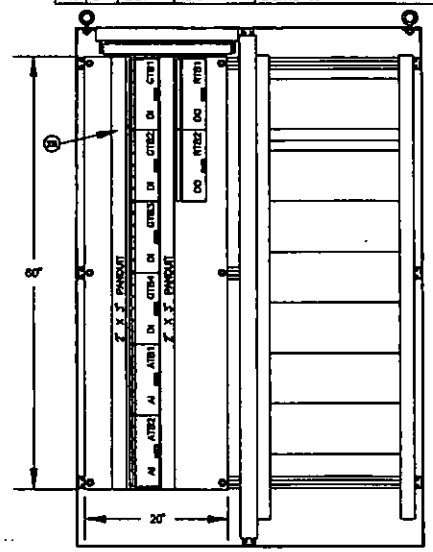

BACK SECTION VIEW

NAMEPLATE SCHEDULE

NO.	QTY	1ST LINE DESCRIPTION	2ND LINE DESCRIPTION	TYPE	HOLE SIZE	SIZE
1	1	[illegible]	[illegible]	[illegible]	1/4"	8" x 8"
2						
3						
4						
5						

BILL OF MATERIAL

ITEM	QTY	MFR.	PART NO.	DESCRIPTION
1	1	HOFFMAN	A-72X48X12SWS	"ENCLOSURE, 72"X48"X24", NEMA 12"
2	2	HOFFMAN	A-72SP24F3	BACK RTS HINGE
3	2	HOFFMAN	A-72SP24F1	"SHIMPANEL, FULL"
4	3	HOFFMAN	A-72P12CP2	CENTER PANEL SUPPORT
5	1	HOFFMAN	A-LF16S18	FLUORESCENT LIGHT STRIP, 18" LAMP
6	1	TRANSDYN	[illegible]	SIDE PANEL @ 3/4" X 32"
7	2	HOFFMAN	A-LT2X3	DOOR SWITCH
8				
9	1	CLCO	P300-24	"DC POWER SUPPLY, 24V",336 WATT
10	1	MCG	416	SURGE/RFI SUPPRESSOR
11	2	TI	U-488	PLC BASE
12	1	TI	430 DC-CPU	PLC CPU
13	1	TI	488 DM	DATA COMMUNICATIONS MODULE
14	1	TI	U-1 MM	UPTRON CARTRIDGE
15	1	TI	400 DC 16 EX	LOCAL IO EXPANSION
16	1	AMP	—	POWER END BLK 4"
17	A/R	PANDUIT	TYPE C	PLASTIC WIREWAY
18	3	TI	U-488	32 DIGITAL INPUT MODULE
19	1	TI	U-16T	16 DIGITAL OUTPUT MODULE
20	2	FACTS	400-8AIC	8 ANALOG INPUT MODULE
21	1	OPCOM	RL4100-1	"CHASSIS, FIBER OPTIC LAN"
22	1	OPCOM	RL4401	POWER SUPPLY
23	1	OPCOM	RL4403	FIBER OPTIC CONTROL CARD
24	8	OPCOM	RL4402	SERIAL DRIVE CARD
25	1	OPCOM	RL4421	RS485 MULTI-DROP CARD
26	2	SQUARE D	QO115	CIRCUIT BREAKER, 15 AMP
27	1	TBD	TBD	DUPLEX RECEPTACLE
28	A/R	PANDUIT	CR3H1L6	"WIREWAY, 2" WIDE X 3" HIGH"
29	2	POLYRAD	DT2B4R3	GENERAL TERMINAL BLOCK
30	6	POLYRAD	RT2B4R3	RELAY TERMINAL BLOCK
31	6	POLYRAD	AT2B4R3	ANALOG TERMINAL BLOCK
32	A/R	ENTRELOCK	1X8S14.12	RTS RAIL
33	22	ENTRELOCK	1X5116.07	TERMINAL BLOCK
34	2	ENTRELOCK	1X8X8.16	END SECTION
35	6	ENTRELOCK	1X2X8.06	END STOP
36	2	CAIY	MS-8	SPLITTER BOX
37	4	SQUARE D	QO115	CIRCUIT BREAKER, 15 AMP
38	2	SICC	401-540-001	TOP TERMINATION CABINET
39	2	SICC	402-540-001	SPLICE SHELF
40	2	SICC	TBD	CABLE STORAGE
41	2	CAIY	MS-8	SPLITTER BOX

NOTES

1.) FOR TI MODULE LOCATION REFER TO BLOCK DIAGRAM DRAWING: 3125-964-0002

2.) FOR POWER DISTRIBUTION WIRING DIAGRAM REFER TO DRAWING: 3125-964-2007(XS) 3125-964-2009(XS)

REV.	DATE:	DESCRIPTION	BY	APP.
1	10/5/94	SHOP AS-BUILT	J.Z.	CH.A.
B	5/27/93	SPLICE CABINETS	G.N.	J.E.
A	3/31/93	8 AI MODULES	G.N.	J.E.

DRAWN BY	DAVID DREYER	APPR. BY	
DESIGN BY	JOHN EWERS	APPR. BY	
CHECK BY	JOHN EWERS	APPR. BY	

DATE: 2-22-1993 FILE: 964-3009 / DATE: 01-19-95

TRANSDYN CONTROLS, INC.

H-3 TRANS-KOOLAU TUNNEL
TI PLC & OPCOM
EQUIPMENT ELEVATION
CROSS PASSAGE X9

JOB NO. 3125
CLIENT JOB NO.
SCALE 1/16" = 1"
SHT 1 OF 1
DRAWING NO. 3125-964-3009

EQUIPMENT ELEVATION

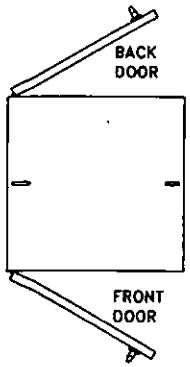

NAMEPLATE SCHEDULE

BOL	QTY	1ST LINE DESCRIPTION	2ND LINE DESCRIPTION	3RD LINE DESCRIPTION	TYPE	LETTER SIZE	SIZE
1	1	MAIN OUTDOOR	FIBER OPTIC HUB 7	LEVEL 2	BLK W/ WHT LETTERS	1/4"	6" X 2"
2	1						
3							
4							
5							

LOCATION

MAIN OUTDOOR FIBER HUB

BILL OF MATERIAL

ITEM	QTY	MFR.	PART NO.	DESCRIPTION
1	1	HOFFMAN	A-72X48X24	"ENCLOSURE, 72"X24"X24", NEMA 12"
2	1	HOFFMAN	A-72BP24PT	BACK MTG BACKIES
3	2	HOFFMAN	A-72P24P1	"BACKPANEL, 72x24"
4	2	TRANSDYN	—	SIDE PANEL 9 3/4" X 31"
5	1	HOFFMAN	A-LF142010	FLUORESCENT LIGHT STRIP, 18" LAMP
6	1	TRANSDYN	—	F.O.N. BRACKET
7	2	HOFFMAN	A-LT1H2	DOOR SWITCH
8	1	TRANSDYN	—	4-PLUG OUTLET STRIP
9	1	CLCO	P3H-24	"DC POWER SUPPLY, 24V",336 WATT
10	1	RCE	416	SURGE/RFI SUPPRESSOR
11	2	TI	U-980	PLC BASE
12	1	TI	420 DC-CPU	PLC CPU
13	1	TI	405 DM	DATA COMMUNICATIONS MODULE
14	1	TI	D-16M	UVROM CARTRIDGE
15	1	TI	440 DC 10 CX	LOCAL IO EXPANSION
16	1	—	—	POWER GND BLK 4"
17	1/2	PANDUIT	TYPE E	PLASTIC WIREWAY
18	3	TI	U-988	32 DIGITAL INPUT MODULE
19	1	TI	U-16T	32 DIGITAL OUTPUT MODULE
20	2	FACTS	403-BASC	8 ANALOG INPUT MODULE
21	1	OPCOM	RL4404-1	"CHASSIS, FIBER OPTIC LAN"
22	1	OPCOM	RL4411	POWER SUPPLY
23	1	OPCOM	RL4413	FIBER OPTIC CONTROL CARD
24	2	OPCOM	RL4419	ACCESS SHOP CARD
25	1	OPCOM	RL4420	32485 MULTI-DROP CARD
26	2	SQUARE D	QOU115	CIRCUIT BREAKER, 15 AMP
27	1	TEK	TEK	DUPLEX RECEPTACLE
28	AR	PANDUIT	E2X6LG6	"WIREWAY, 6" WIDE X 2" HIGH"
29	3	POLYGON	GTB8490	GENERAL TERMINAL BLOCK
30	2	POLYGON	RTB8490	RELAY TERMINAL BLOCK
31	2	POLYGON	ATB8490	ANALOG TERMINAL BLOCK
32	AR	ENTRELOC	160B04.12	NTS RAIL
33	22	ENTRELOC	315114.07	TERMINAL BLOCK
34	3	ENTRELOC	315060.16	END SECTION
35	4	ENTRELOC	315080.06	END STOP
36	1	TRANSDYN	—	6-PLUG OUTLET STRIP
37	2	SQUARE D	QOU110	CIRCUIT BREAKER, 10 AMP
38	1	BICC	401-010-000	78P TERMINATION CABINET
39	1	BICC	463-010-000	SPLICE SHELF
40	1	BICC	TBW	CABLE STORAGE
41	2	CATT	RS-2	SPLITTER BOX

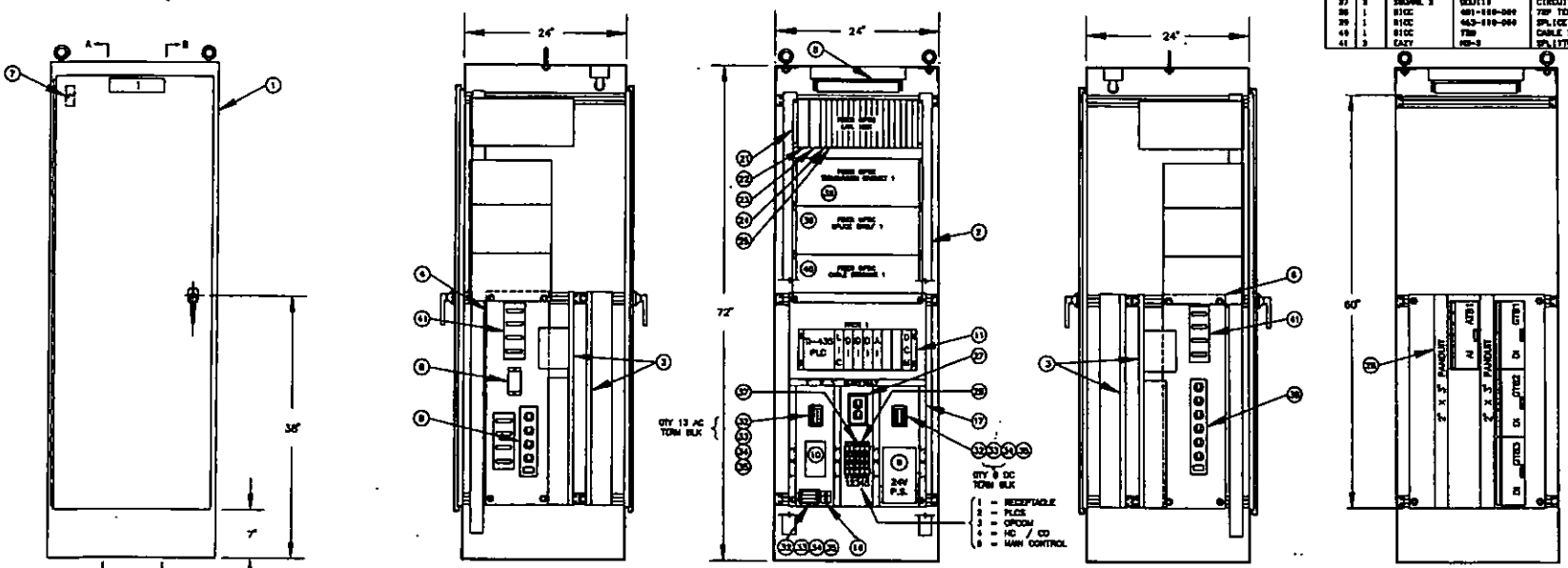

FRONT VIEW | SECTION A-A | FRONT SECTION VIEW | SECTION B-B | BACK SECTION VIEW

NOTES

1.) FOR TI MODULE LOCATION REFER TO BLOCK DIAGRAM DRAWING: 3125-964-0002

2.) FOR POWER DISTRIBUTION WIRING DIAGRAM REFER TO DRAWING: 3125-964-2010

REV.	DATE:	DESCRIPTION	BY	APP.
1	10/5/94	SHOP AS-BUILT	J.Z.	CH.A.
B	5/27/93	SPLICE CABINETS	G.N.	J.E.
A	3/31/93	8 AI MODULES	G.N.	J.E.

DRAWN BY	DAVID DREYER	APPR. BY	
DESIGN BY	JOHN EMERS	APPR. BY	
CHECK BY	JOHN EMERS	APPR. BY	

DATE: 3-4-1993 FILE: 964-3010 / DATE: 01-19-95

TRANSDYN CONTROLS INC.

H-3 TRANS-KOOLAU TUNNEL
TI PLC & OPCOM
EQUIPMENT ELEVATION
KO LEV2

JOB NO. 3125
CLIENT JOB NO.
SCALE 1/16" = 1"
SHT 1 OF 1
DRAWING NO. 3125-964-3010

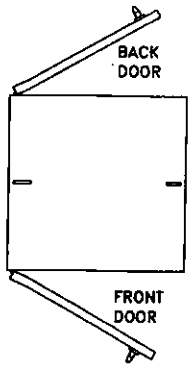

TOP VIEW

EQUIPMENT ELEVATION

NAMEPLATE SCHEDULE					
NO.	QTY	1ST LINE DESCRIPTION	2ND LINE DESCRIPTION	TYPE	LETTER SIZE	SIZE
1	1	MAIN CONTROL	LEVEL 3	PLASTIC LAMINATE ACRYLIC	1/4"	9" X 2"
2						
3						
4						
5						

LOCATION
MAIN CONSOLE PANEL SIDE

BILL OF MATERIAL

ITEM	QTY	MFR.	PART NO.	DESCRIPTION
1	1	HOFFMAN	A-72X24X6SSA	"ENCLOSURE, 72"X24"X24"", NEMA 12"
2	2	HOFFMAN	A-72P24F1	"BACKPANEL, FULL"
3	1	HOFFMAN	A72SHP14	"SIDEPANEL, FULL"
4	1	HOFFMAN	X-LF16318	FLUORESCENT LIGHT STRIP, 18" LAMP
5				
6	2	HOFFMAN	A-LF2X9	DOOR SWITCH
7				
8				
9	1	ELCO	K1684-24	"DC POWER SUPPLY, 24V".100 WATT
10	1	MOV	416	SURGE/RFI SUPPRESSOR
11	2	TI	U-980	PLC BASE
12				
13				
14				
15				
16	2	TI	405 DC RIC	REMOTE IO EXPANSION
17	1	JAP	---	POWER CAB BUS 4'
18	8	TI	U-88N	32 DIGITAL INPUT MODULE
19	2	TI	U-18T	32 DIGITAL OUTPUT MODULE
20	3	FACTS	405-8ADC	8 ANALOG INPUT MODULE
21				
22				
23				
24				
25	A/R	PANDUIT	TYPE E	PLASTIC WIREWAY
26	2	SQUARE D	QO115	CIRCUIT BREAKER, 15 AMP
27	1	TEO	T30	DUPLEX RECEPTACLE
28	AR	PANDUIT	T80	"WIREWAY, 8" WIDE X 3" HIGH"
29	8	POLYBUS	GTB8485	GENERAL TERMINAL BLOCK
30	4	POLYBUS	RTB8485	RELAY TERMINAL BLOCK
31	3	POLYBUS	ATB8485	ANALOG TERMINAL BLOCK
32	AR	ENTRELOC	164510.12	NYS RAIL
33	22	ENTRELOC	115116.07	TERMINAL BLOCK
34	2	ENTRELOC	115368.16	END SECTION
35	4	ENTRELOC	160498.06	END STOP
36	2	SQUARE D	QO115	CIRCUIT BREAKER, 15 AMP

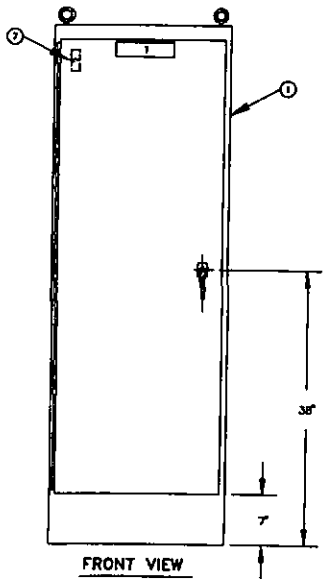

FRONT VIEW

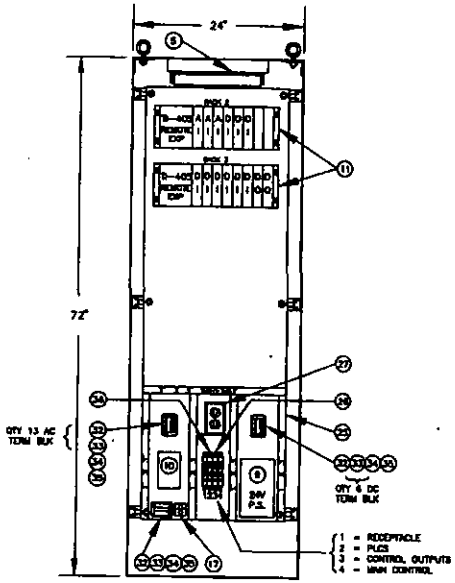

FRONT SECTION VIEW

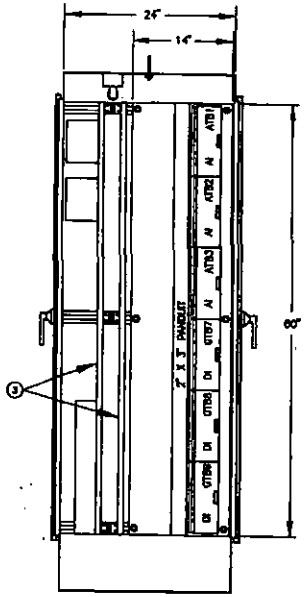

LEFT SIDE SECTION VIEW

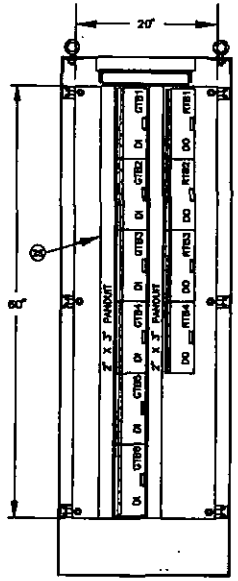

BACK SECTION VIEW

NOTES

1.) FOR TI MODULE LOCATION REFER TO BLOCK DIAGRAM DRAWING: 3125-964-0002

2.) FOR POWER DISTRIBUTION WIRING DIAGRAMS REFER TO DRAWINGS: 3125-964-2011(KO LEV3) 3125-964-2002(LO LEV3)

REV.	DATE:	DESCRIPTION	BY	APP.
1	10/5/94	SHOP AS-BUILT	J.Z.	CH.A.
B	5/27/93	CABINET SIZE	G.N.	J.E.
A	3/31/93	8 AI MODULES	G.N.	J.E.

DRAWN BY	DAVID DREYER	APPR. BY	
DESIGN BY	JOHN EWERS	APPR. BY	
CHECK BY	JOHN EWERS	APPR. BY	

DATE: 3-3-1993 FILE: 964-3011 / DATE: 01-19-95

TRANSDYN CONTROLS, INC.

H-3 TRANS-KOOLAU TUNNEL
TI PLC
EQUIPMENT ELEVATION
PLC-KO LEV3

JOB NO. 3125
CLIENT JOB NO.
SCALE 1/16" = 1"
SHT 1 OF 1
DRAWING NO. 3125-964-3011

EQUIPMENT ELEVATION

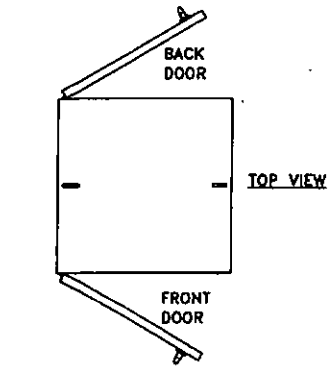

NAMEPLATE SCHEDULE							
NO.	QTY	1ST LINE DESCRIPTION	2ND LINE DESCRIPTION	3RD LINE DESCRIPTION	TYPE	LETTER SIZE	SIZE
1	1	MAIN GROUND	FIBER OPTIC HUB 10	LOCO. 3	BLACK ON WHITE	1/4"	5" x 2"
2							
3							
4							
5							

LOCATION
MAIN INDOOR PANEL BOX

BILL OF MATERIAL				
ITEM	QTY	MFR.	PART NO.	DESCRIPTION
1	1	HOFFMAN	A-72248247SA	ENCLOSURE, 72"X24"X24", NEMA 12"
2	1	HOFFMAN	A-72SP247S	BACK MTG ANGLES
3	8	HOFFMAN	A-72SP47S	SIDEPANEL, HALF "
4				
5	1	HOFFMAN	S-L/14X8	FLUORESCENT LIGHT STRIP, 18" LAMP
6	1	TRANSDYN		SIDE PANEL, 9 1/4" X 21"
7	6	HOFFMAN	A-LXSV8	DOOR SWITCH
8				
9	1	CLCO	P200-84	"XS" POWER SUPPLY, 84V", 336 WATT
10	1	MCG	416	SURGE/RFI SUPPRESSOR
11	8	TI	U-SR2	PLC BASE
12	1	TI	425 DC-CPU	PLC CPU
13	1	TI	425 DH	DATA COMMUNICATIONS MODULE
14	1	TI	C-14M	UPTRON CARTRIDGE
15	1	TI	425 DC 10 EX	LOCAL IO EXPANSION
16	1	AMP	----	POWER GND BUS 4"
17	A/B	PANDUIT	TYPE E	PLASTIC WIREWAY
18	2	TI	U-DIN	32 DIGITAL INPUT MODULE
19	1	TI	U-DOT	32 DIGITAL OUTPUT MODULE
20	8	FACTS	4102-0402C	8 ANALOG INPUT MODULE
21	1	OPCOM	RL4400-1	"CHASSIS, FIBER OPTIC LAN"
22	1	OPCOM	RL4401	POWER SUPPLY
23	1	OPCOM	RL4402	FIBER OPTIC CONTROL CARD
24	8	OPCOM	RL4403	RS232 DROP CARD
25	1	OPCOM	RL4405	RS485 (RAIL)-DROP CARD
26	2	SQUARE D	QOL115	CIRCUIT BREAKER, 15 AMP
27	1	TSB	TS8	DUPLEX RECEPTACLE
28	AR	PANDUIT	C20CBL66	"WIREWAY, 2" WIDE X 3" HIGH"
29	2	POLYPAK	6T2R4T3	GENERAL TERMINAL BLOCK
30	2	POLYPAK	RT2R4T3	RELAY TERMINAL BLOCK
31	2	POLYPAK	AT2R4T3	ANALOG TERMINAL BLOCK
32	AR	DITMOLCO	1660301.10	MTG RAIL
33	22	DITMOLCO	115136.07	TERMINAL BLOCK
34	3	DITMOLCO	118368.16	EMS SECTION
35	6	DITMOLCO	1103882.06	EMS STOP
36	5	TRANSDYN	----	U-PLUG OUTLET STRIP
37	3	SQUARE D	QOL115	CIRCUIT BREAKER, 15 AMP
38	1	BICC	481-010-040	78P TERMINATION CABINET
39	1	BICC	463-010-090	SPLICE SHELF
40	1	BICC	T89	CABLE STORAGE
41	4	CATV	RS-9	SPLITTER BOX

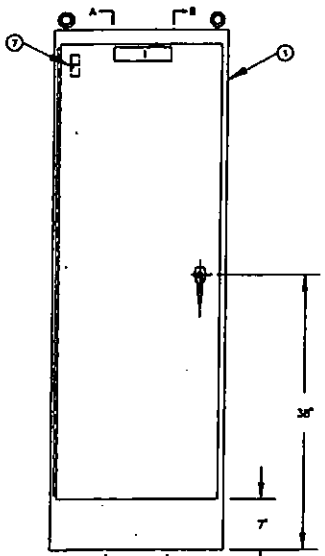

FRONT VIEW

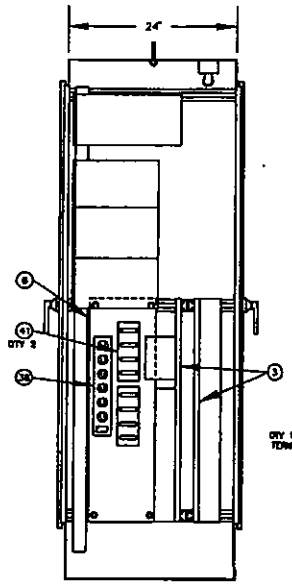

SECTION A-A

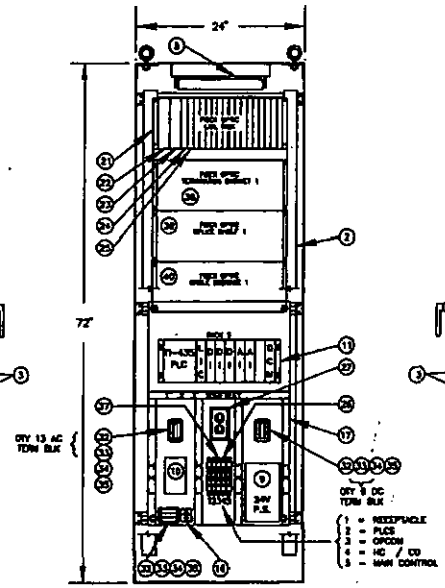

FRONT SECTION VIEW

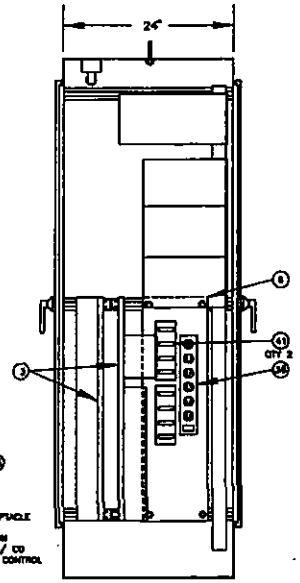

SECTION B-B

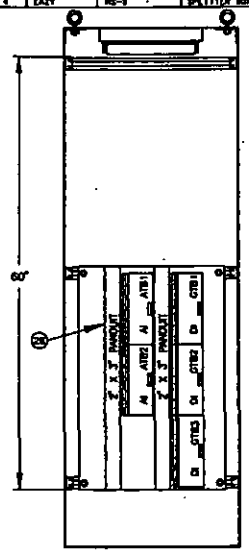

BACK SECTION VIEW

NOTES

1.) FOR TI MODULE LOCATION REFER TO BLOCK DIAGRAM DRAWING: 3125-964-0002

2.) FOR POWER DISTRIBUTION WIRING DIAGRAM REFER TO DRAWING: 3125-964-3012

REV.	DATE:	DESCRIPTION	BY	APP.
1	10/5/94	SHOP AS-BUILT	J.Z.	CH.A.
B	5/27/93	SPLICE CABINETS	G.N.	J.E.
A	3/31/93	8 AI MODULES	G.N.	J.E.

DRAWN BY	DAVID DREYER	APPR. BY	
DESIGN BY	JOHN EWERS	APPR. BY	
CHECK BY	JOHN EWERS	APPR. BY	

DATE: 3-4-1993 FILE: 964-3012 / DATE: 10-11-94

TRANSDYN CONTROLS INC

H-3 TRANS-KOOLAU TUNNEL
TI PLC & OPCOM
EQUIPMENT ELEVATION
PLC-KI LEV2

JOB NO. 3125
CLIENT JOB NO.
SCALE 1/16" = 1"
SHT 1 OF 1
DRAWING NO. 3125-964-3012

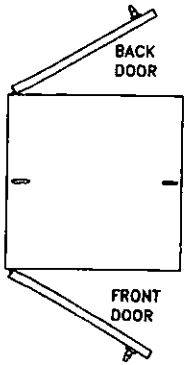

TOP VIEW

EQUIPMENT ELEVATION

NAMEPLATE SCHEDULE						
NO.	QTY	1ST LINE DESCRIPTION	2ND LINE DESCRIPTION	TYPE	LETTER SIZE	SIZE
1	1	MAIN GROUND	LEVEL 3	BUS BAR WITH HOLES	1/4"	8" X 2"
2						
3						
4						
5						

LOCATION
MAIN GROUND PANEL SUB

BILL OF MATERIAL				
ITEM	QTY	MFR.	PART NO.	DESCRIPTION
1	1	HOFFMAN	A-72X48X6FSTA	"ENCLOSURE, 72"'X48"'X36"', HOWA 16"
2				
3	2	HOFFMAN	A-72P24F1	"BACKPANEL, FULL"
4	2	HOFFMAN	A-72P24F14	"SIDEPANEL, FULL"
5	1	HOFFMAN	SL-LFTLS010	FLUORESCENT LIGHT STRIP, 18" LAMP
6				
7	2	HOFFMAN	A-LFDSW	DOOR SWITCH
8				
9	1	ELCO	K15W-24	"DC POWER SUPPLY, 24V".150 WATT
10	1	MCG	416	SURGE/RFI SUPPRESSOR
11	9	TI	U-BBS	PLC BASE
12				
13				
14				
15				
16	3	TI	485 DC RIC	REMOTE IO CONNECTION
17	1	JAM	—	POWER GND BUS 4"
18	10	TI	U-DSM	32 DIGITAL INPUT MODULE
19	3	TI	U-16T	32 DIGITAL OUTPUT MODULE
20	4	FACTS	485-8ADC	8 ANALOG INPUT MODULE
21				
22				
23				
24				
25	A/R	PANDUIT	TYPE E	PLASTIC WIREWAY
26	2	SQUARE D	QO115	CIRCUIT BREAKER, 15 AMP
27	1	TRB	TRB	DUPLEX RECEPTACLE
28	AR	PANDUIT	T99	"WIREWAY, 2" WIDE X 3" HIGH"
29	10	POLYBUS	GTB6405	GENERAL TERMINAL BLOCK
30	6	POLYBUS	RTB6405	RELAY TERMINAL BLOCK
31	4	POLYBUS	ATB6405	ANALOG TERMINAL BLOCK
32	AR	CONTROLOC	16R390.12	RTD RAIL
33	22	CONTROLOC	115116.07	TERMINAL BLOCK
34	3	CONTROLOC	118368.16	END SECTION
35	4	CONTROLOC	103942.25	END STOP
36	3	SQUARE D	QO110	CIRCUIT BREAKER, 10 AMP

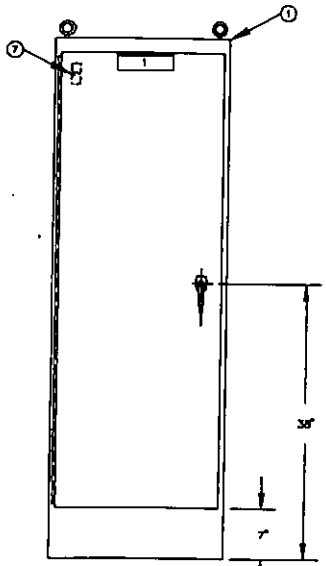

FRONT VIEW

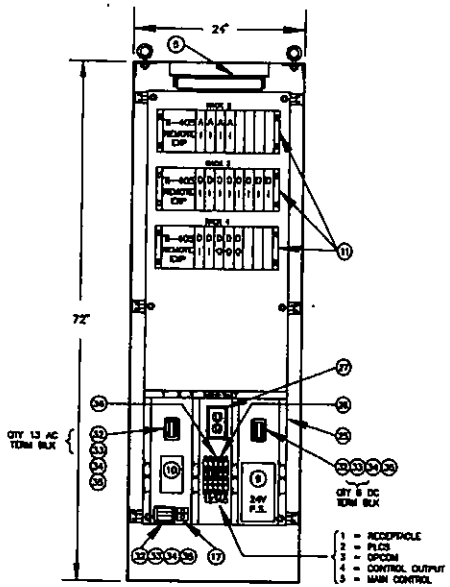

FRONT SECTION VIEW

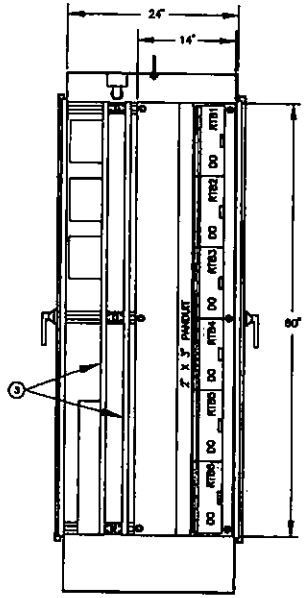

LEFT SIDE SECTION VIEW

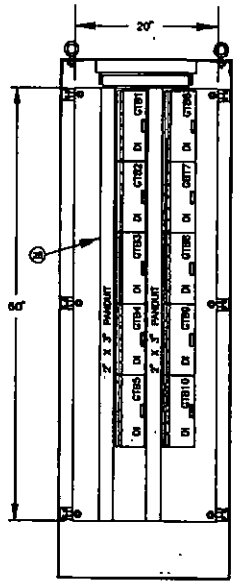

BACK SECTION VIEW

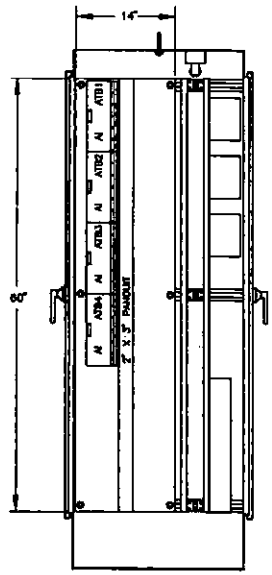

RIGHT SIDE SECTION VIEW

NOTES

1.) FOR TI MODULE LOCATION REFER TO BLOCK DIAGRAM DRAWING: 3125-964-0002

2.) FOR POWER DISTRIBUTION WIRING DIAGRAM REFER TO DRAWING: 3125-964-2013

REV.	DATE:	DESCRIPTION	BY	APP.
1	10/5/94	SHOP AS-BUILT	J.Z.	CH.A.
B	5/27/93	CABINET SIZE	G.N.	J.E.
A	3/31/93	8 AI MODULES	G.N.	J.E.

DRAWN BY	DAVID DREYER	APPR. BY	
DESIGN BY	JOHN EWERS	APPR. BY	
CHECK BY	JOHN EWERS	APPR. BY	

DATE: 3-1-1993 FILE: 964-3013 / DATE: 01-19-95

TRANSDYN CONTROLS, INC.

H-3 TRANS-KOOLAU TUNNEL
TI PLC
EQUIPMENT ELEVATION
PLC-K1 LEV3

JOB NO. 3125
CLIENT JOB NO.
SCALE 1/16" = 1"
SHT 1 OF 1
DRAWING NO. 3125-964-3013

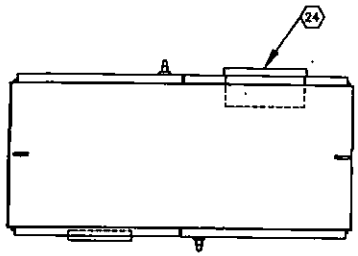

TOP VIEW

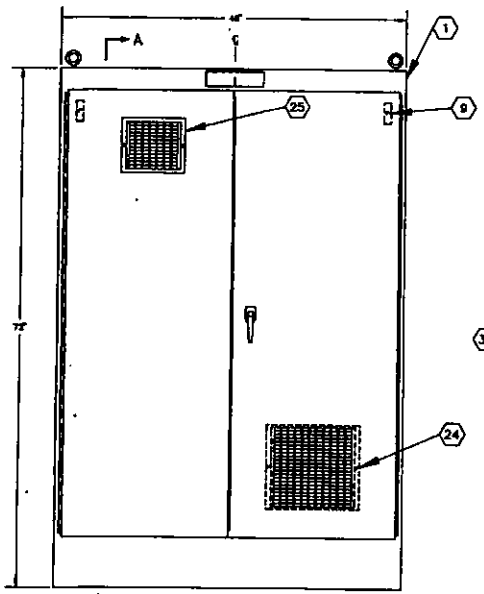

FRONT/REAR ELEVATION

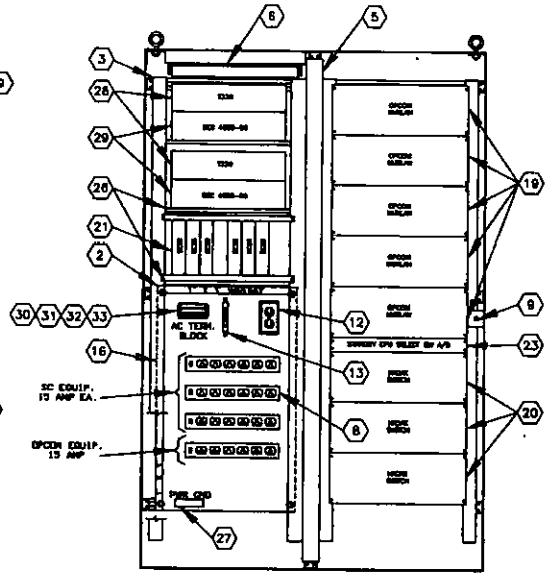

FRONT SECTION VIEW

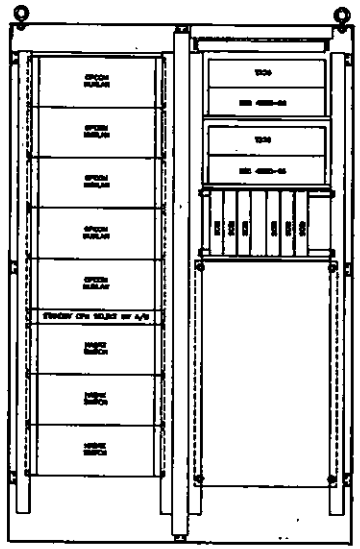

REAR SECTION VIEW

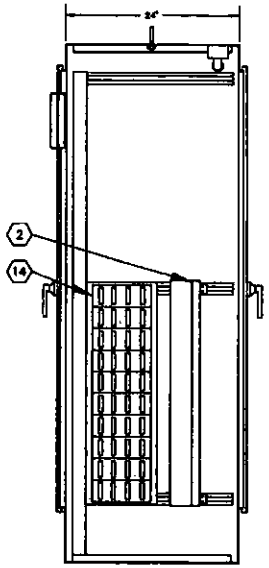

SECTION A-A

NAMEPLATE SCHEDULE						
NO.	QTY	1ST LINE DESCRIPTION	2ND LINE DESCRIPTION	TYPE	LETTER SIZE	SIZE
1	1	CONTROL CENTER	[illegible]	[illegible]	1/4"	8" x 3"
2						
3						
4						
5						

LOCATION
CONTROL CENTER

BILL OF MATERIAL

ITEM	QTY	MFR.	PART NO.	DESCRIPTION
1	1	HOFFMAN	A-[illegible]	ENCLOSURE, 24X48X72, NEMA 12
2	1	HOFFMAN	A-72P24F2	HALF PANEL
3	2	HOFFMAN	A-72RA19TH	RACK MOUNTING ANGLE
4				
5	2	HOFFMAN	A-72FSCPS	CENTER PANEL SUPPORT
6	1	HOFFMAN	X-LF16018	FLUORESCENT LIGHT STRIP, 18" LAMP
7				
8	4	NCG	279	6 OUTLET POWER STRIP, 15 AMP
9	4	HOFFMAN	A-LFSV0	DOOR SWITCH
10				
11				
12	1	TBD	TBD	DUPLEX RECEPTACLE
13	1	SQUARE D	QOU115	CIRCUIT BREAKER, 15 AMP
14	10	ABLE	----	3-WAY SPLITTER
15				
16	A/R	PANDUIT	TYPE E	PLASTIC WIREWAY
17				
18				
19	1	OPCOM	SEE NOTE 1	FIBER OPTIC MUX
20	2	HADAX	6898	HADAX SWITCH
21	6	ABLE	SC26	SERIAL PORT MUX
22				
23	1	TBD	TBD	STANDBY CPU SELECT SWITCH A/B
24	1	HOFFMAN	A-PA18AXPN	COOLING FAN PACKAGE
25	1	HOFFMAN	A-CX0818	EXHAUST GRILL & FILTER
26	2	HAMMOND	HA3219N0815CCB	MOUNTING SHELF
27	1	JAP		POWER GND BUS 4"
28	2	BCC	3216X	CCP BCC 1/72CH TAPE DRIVE
29	2	BCC	4890-90	YAX SLC COMPUTER
30	A/R	ENTRELEC	160560.18	RTG RAIL
31	6	ENTRELEC	115116.07	TERMINAL BLOCK
32	1	ENTRELEC	118240.16	DCO SECTION
33	2	ENTRELEC	183082.05	DCO STOP
34				

NOTES

1.) FOR TI MODULE LOCATION REFER TO BLOCK DIAGRAM DRAWING: 3125-964-0002

2.) FOR POWER DISTRIBUTION WIRING DIAGRAM REFER TO DRAWING: 3125-964-2014

3.) SEE DWG 3125-964-3024 FOR (2 OF 2) OF SC & OPCOM CONTROL CENTER.

REV.	DATE:	DESCRIPTION	BY	APP.
0	9-21-94	SHOP AS-BUILT	J.Z.	S.R.
B	5-27-93	POWER STRIPS	G.N.	J.E.
A	3-31-93	TB, SS, CB & PS	G.N.	J.E.

DRAWN BY	DAVID DREYER	APPR. BY	
DESIGN BY	JOHN EWERS	APPR. BY	
CHECK BY	JOHN EWERS	APPR. BY	

DATE: 2-23-1993 FILE: 984-3014 / DATE: 01-19-95

TRANSDYN CONTROLS, INC.

H-3 TRANS-KOOLAU TUNNEL
SC & OPCOM (1 OF 2)
EQUIPMENT ELEVATION
CONTROL CENTER

JOB NO. 3125
CLIENT JOB NO.
SCALE 1/16" = 1"
SHT 1 OF 1
DRAWING NO. 3125-964-3014

EQUIPMENT ELEVATION

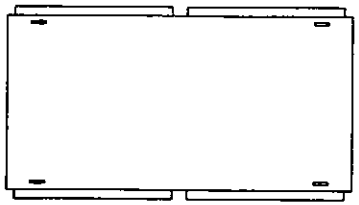

TOP VIEW

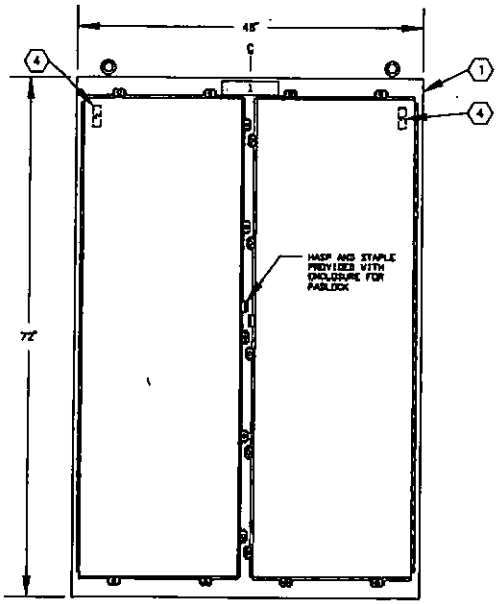

FRONT / BACK VIEW

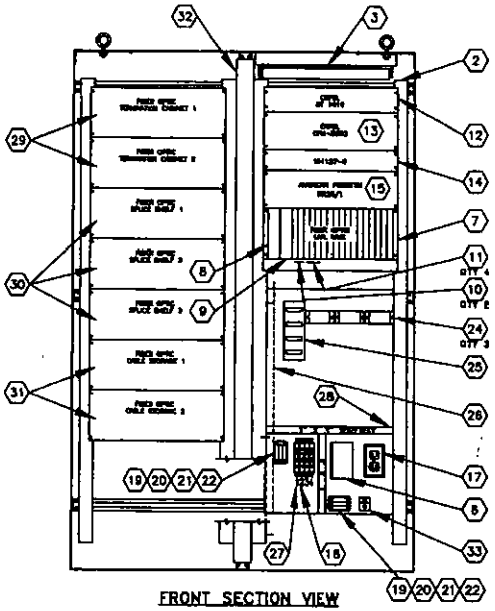

FRONT SECTION VIEW

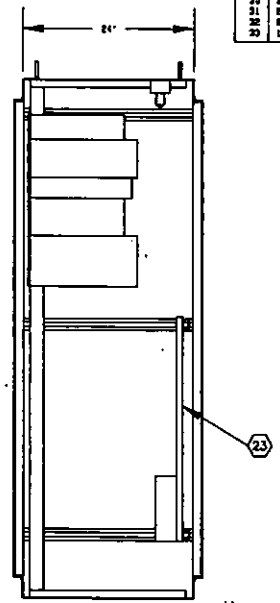

SIDE SECTION VIEW

NAMEPLATE SCHEDULE

NO.	QTY	1ST LINE DESCRIPTION	2ND LINE DESCRIPTION	TYPE	LETTER SIZE	SIZE
1	1	HALAWA FAR APPROACH	FIBER OPTIC MUX V/CCTV	[illegible]	1/4"	6" x 2"
2						
3						
4						
5						

LOCATION
[illegible]

BILL OF MATERIAL

ITEM	QTY	MFR.	PART NO.	DESCRIPTION
1	1	HOFFMAN	CUSTOM	ENCLOSURE, 72X48X24, NEMA 4
2	1	HOFFMAN	A-72SP84F3	RACK MTG ANGLES
3	1	HOFFMAN	X-LF16S18	FLUORESCENT LIGHT STRIP, 18" LAMP
4	4	HOFFMAN	A-LF3VB	DOOR SWITCH
5	1	SIEGER	FSC-SS9	FIBER SPLICE CENTER
6	1	MCG	414	SURGE SUPPRESSOR
7	1	OPCOM	ML4400-1	CHASSIS, FIBER OPTIC LAN
8	1	OPCOM	ML4401	POWER SUPPLY
9	1	OPCOM	ML4403	FIBER OPTIC CONTROL CARD
10	2	OPCOM	ML4405	RS232 DROP CARD
11	4	OPCOM	ML4417	PHONE CARD
12	1	CATOL	OT 1010	OPTICAL TRANSMITTER
13	1	CATOL	CTM-2090	CONTROLLER
14	1	CATOL	151127-8	COMBINER
15	1	FIBERTEK	MR24/1	MULTIPLEXER AN
16	2	SQUARE D	QOU115	CIRCUIT BREAKER, 15 AMP
17	1	TBD	TBD	DUPLEX RECEPTACLE
18				
19	A/R	ENTRELOC	168060.12	MTG RAIL
20	11	ENTRELOC	115116.07	TERM. BLOCK
21	2	ENTRELOC	118060.16	END SECTION
22	4	ENTRELOC	103002.26	END STOP
23	1	HOFFMAN	A72P84FP	HALF BACK PANEL
24	3	TRANSDYN	---	F.O.M. BRACKET
25	1	GAST	HS-3	SPLITTER BOX
26	1	SOUND'R	AZS-1	6 DUPLEX OUTLET POWER STRIP
27	1	SQUARE D	QOU110	CIRCUIT BREAKER, 10 AMP
28	A/R	PANDUIT	TYPE E	PLASTIC WIREWAY
29	2	BICC	481-600-000	72P TERMINATION CABINET
30	2	BICC	463-600-000	SPLICE SHELF
31	2	BICC	TBD	CABLE STORAGE
32	2	HOFFMAN	A-72FSCPS	CENTER PANEL SUPPORT
33	1.	TRANSDYN	---	GND LUG

NOTES

1.) FOR POWER DISTRIBUTION WIRING DIAGRAM REFER TO DRAWING: 3125-964-2016

REV.	DATE:	DESCRIPTION	BY	APP.
1	10/5/94	SHOP AS-BUILT	J.Z.	CH.A.
C	5/27/93	SPLICE CABINETS	G.N.	J.E.
B	3/31/93	DOOR & TEMP. CONTROL SW.	G.N.	J.E.

DRAWN BY: DAVID DREYER — APPR. BY:
DESIGN BY: JOHN EWERS — APPR. BY:
CHECK BY: JOHN EWERS — APPR. BY:
DATE: 2-23-1993 FILE: 964-3015 / DATE: 01-19-95

TRANSDYN CONTROLS, INC.

H-3 TRANS-KOOLAU TUNNEL
CCTV & OPCOM
EQUIPMENT ELEVATION
HALAWA FAR APPROACH

JOB NO. 3125
CLIENT JOB NO.
SCALE 1/16" = 1"
SHT 1 OF 1
DRAWING NO. 3125-964-3015

EQUIPMENT ELEVATION

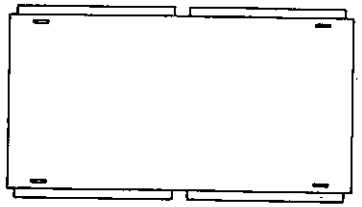

TOP VIEW

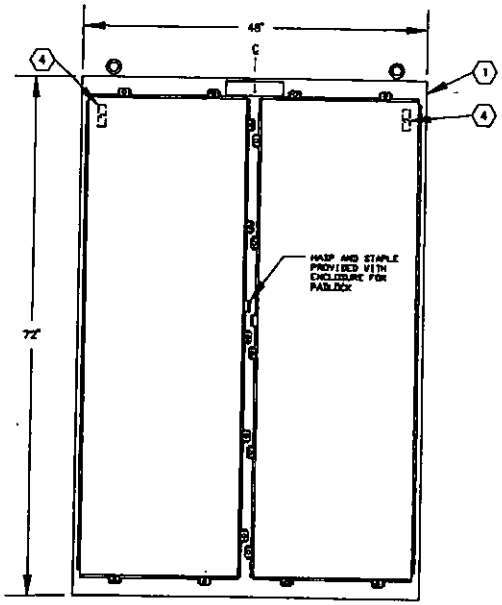

FRONT / BACK VIEW

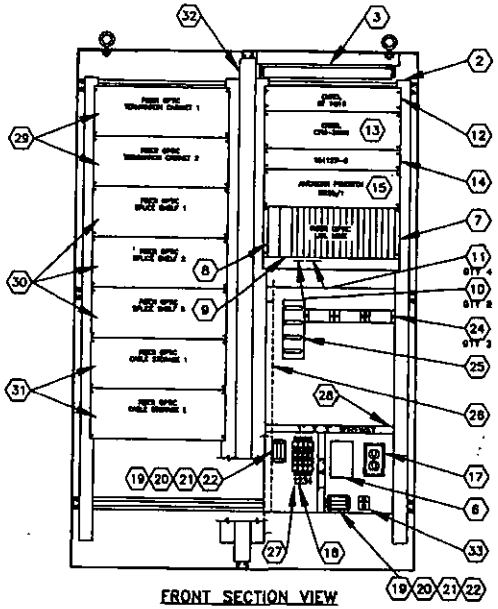

FRONT SECTION VIEW

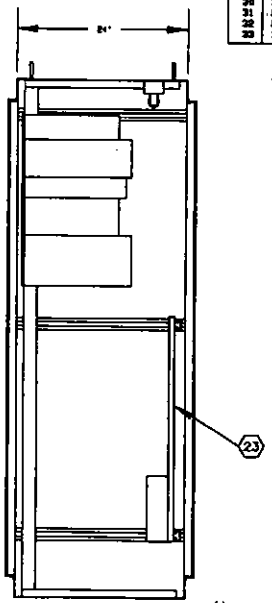

SIDE SECTION VIEW

NAMEPLATE SCHEDULE

NO.	QTY	1ST LINE DESCRIPTION	2ND LINE DESCRIPTION	TYPE	LETTER SIZE	SIZE
1	1	MAIN HIGH APPROACH	FIBER OPTIC HUB TUNNEL	BLACK ON GOLD VINYL	1/4"	2" x 2"
2						
3						
4						
5						

LOCATION
[illegible]

BILL OF MATERIAL

ITEM	QTY	MFR.	PART NO.	DESCRIPTION
1	1	HOFFMAN	CUSTOM	ENCLOSURE, 72X48X24, NEMA 4
2	1	HOFFMAN	A-72BPE4FS	BACK MTG ANGLES
3	1	HOFFMAN	X-LF16018	FLUORESCENT LIGHT STRIP, 18" LAMP
4	4	HOFFMAN	A-LF3MD	DOOR SWITCH
5	1	SIECOR	FSC-050	FIBER SPLICE CENTER
6	1	MOD	416	SURGE SUPPRESSOR
7	1	OPCOM	ML4408-1	CHASSIS, FIBER OPTIC LAN
8	1	OPCOM	ML4401	POWER SUPPLY
9	1	OPCOM	ML4403	FIBER OPTIC CONTROL CARD
10	2	OPCOM	ML4408	RS232 DROP CARD
11	4	OPCOM	ML4417	PHONE CARD
12	1	CATEL	DT 1018	OPTICAL TRANSMITTER
13	1	CATEL	CFM-3000	CONTROLLER
14	1	CATEL	191187-0	COMBINER
15	1	FIBERTEX	RS825/1	MULTIPLEXER AM
16	3	SQUARE D	QOU115	CIRCUIT BREAKER, 15 AMP
17	1	TRD	TRD	DUPLEX RECEPTACLE
18				
19	A/R	ENTRELOC	168509.12	MTG RAIL
20	11	ENTRELOC	115116.07	TERM. BLOCK
21	2	ENTRELOC	118368.16	END SECTION
22	4	ENTRELOC	103002.06	END STOP
23	1	HOFFMAN	A72P24FZ	HALF BACK PANEL
24	3	TRANSDYN	---	F.O.N. BRACKET
25	1	EATY	H2-3	SPLITTER BOX
26	1	SQUARE'D	ACD-1	6 DUPLEX OUTLET POWER STRIP
27	1	SQUARE D	QOU118	CIRCUIT BREAKER, 10 AMP
28	A/R	PANDUIT	TYPE E	PLASTIC WIREWAY
29	2	BICC	481-966-906	72P TERMINATION CABINET
30	2	BICC	463-966-906	SPLICE SHELF
31	2	BICC	TR3	CABLE STORAGE
32	2	HOFFMAN.	A-78FSCPS	CENTER PANEL SUPPORT
33	1	TRANSDYN	---	GND LUG

NOTES

1.) FOR POWER DISTRIBUTION WIRING DIAGRAM REFER TO DRAWING: 3125-964-2018

REV.	DATE:	DESCRIPTION	BY	APP.
1	10/5/94	SHOP AS-BUILT	J.Z.	CH.A.
C	5/27/93	SPLICE CABINETS	G.N.	J.E.
B	3/31/93	DOOR & TEMP. CONTROL SW.	G.N.	J.E.

DRAWN BY	DAVID DREYER	APPR. BY	
DESIGN BY	JOHN EWERS	APPR. BY	
CHECK BY	JOHN EWERS	APPR. BY	

DATE: 2-23-1993 FILE: 964-3016 / DATE: 01-19-95

TRANSDYN CONTROLS, INC.

H-3 TRANS-KOOLAU TUNNEL
CCTV & OPCOM
EQUIPMENT ELEVATION
HAIKU NEAR APPROACH

JOB NO. 3125
CLIENT JOB NO.
SCALE 1/16" = 1"
SHT 1 OF 1
DRAWING NO. 3125-964-3016

Control Center Cabinets (Equipment Room)

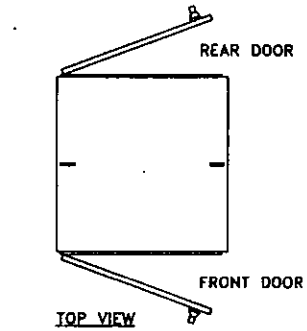

TOP VIEW

EQUIPMENT ELEVATION

NAMEPLATE SCHEDULE						
NO.	QTY	1ST LINE DESCRIPTION	2ND LINE DESCRIPTION	TYPE	LETTER SIZE	SIZE
1	1	CONTROL CENTER	FIBER OPTIC SPLICE CABINET	BLK W/ WHT LETTERS	1/4"	6" x 2"
2						
3						
4						
5						

BILL OF MATERIAL				
ITEM	QTY	MFR.	PART NO.	DESCRIPTION
1	1	HOFFMAN	A-72242416SM	ENCLOSURE, 72X24X24, NEMA 12
2	1	HOFFMAN	A-24BP24F3	BACK MTG ANGLES
3	3	BICC	481-040-040	72" TERMINATION CABINET
4	5	BICC	483-040-060	SPLICE SHELF
5	1	BICC	T20	CABLE STORAGE
6	1	HOFFMAN	X-LF16310	FLUORESCENT LIGHT STRIP, 18" LAMP
7	2	HOFFMAN	A-LF3VB	DOOR SWITCH
8	A/R	ENTRELEC	163598.12	MTG RAIL
9	9	ENTRELEC	113116.07	TERMINAL BLOCK
10	1	ENTRELEC	113368.16	END SECTION
11	2	ENTRELEC	163602.26	END STOP

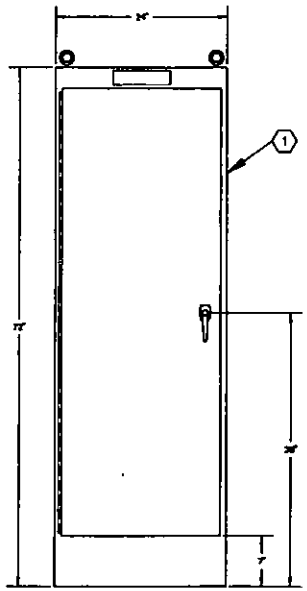

FRONT/REAR ELEVATION

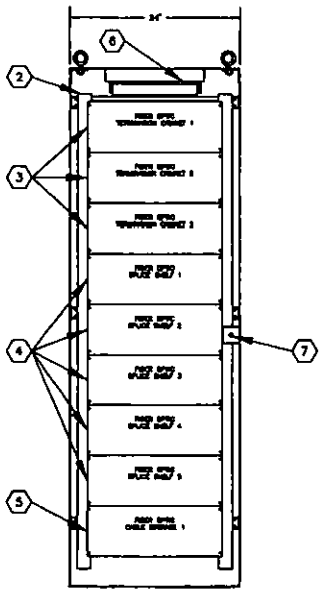

FRONT SECTION VIEW

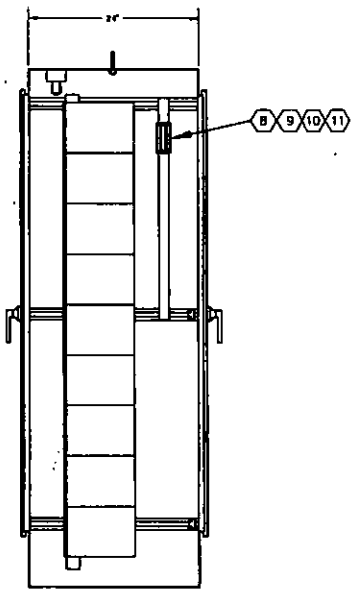

SIDE SECTION VIEW

NOTES

1.) FOR POWER DISTRIBUTION WIRING DIAGRAM REFER TO DRAWING: 3125-964-2021

REV.	DATE:	DESCRIPTION	BY	APP.
B	5/27/93	SPLICE CABINET	G.N.	J.E.
A	4-9-93	ISSUED FOR APPROVAL	G.N.	J.E.

DRAWN BY	GREG NAGA	APPR. BY	
DESIGN BY	JOHN EWERS	APPR. BY	
CHECK BY	JOHN EWERS	APPR. BY	
DATE: 4-9-93	FILE: 964-3028 / DATE: 01-19-95		

TRANSDYN CONTROLS, INC.

H-3 TRANS-KOOLAU TUNNEL
FIBER OPTIC SPLICE CABINET
EQUIPMENT ELEVATION
CONTROL CENTER

JOB NO. 3125
CLIENT JOB NO.
SCALE 1/16" = 1"
SHT 1 OF 1
DRAWING NO. 3125-964-3028

EQUIPMENT ELEVATION

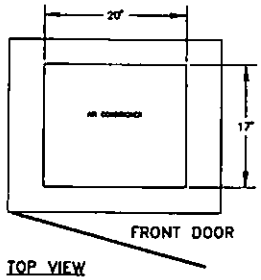

TOP VIEW

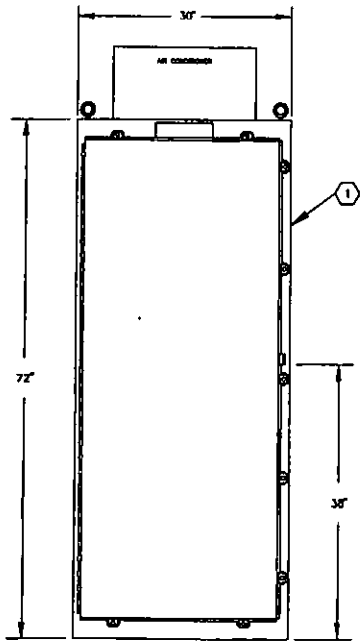

FRONT / BACK VIEW

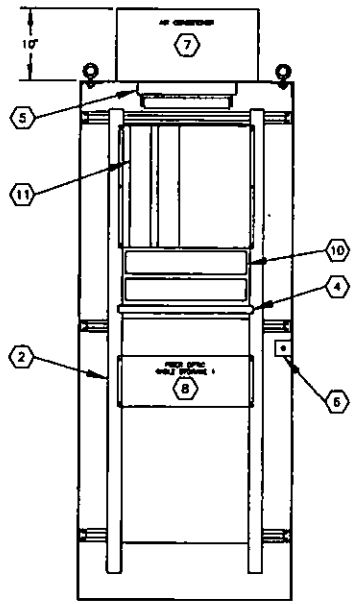

FRONT SECTION VIEW

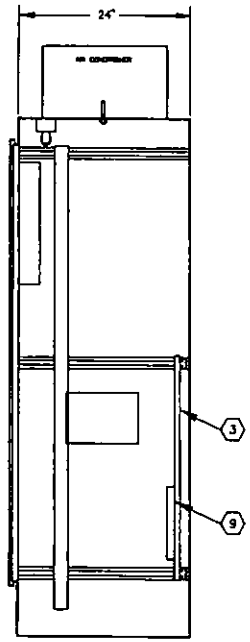

SIDE SECTION VIEW

NAMEPLATE SCHEDULE

NO.	QTY	1ST LINE INSCRIPTION	2ND LINE INSCRIPTION	TYPE	LETTER HGT	SIZE
1	1	VOICE CIRCUITS	CROSS CONNECT	PLE W/ WHT LETTERS	1/4"	8" X 3"
2						
3						
4						
5						

BILL OF MATERIAL

ITEM	QTY	MFR.	PART NO.	DESCRIPTION
1	1	HOFFMAN	A-72X36X24FS	ENCLOSURE, 72X36X24, NEMA 4
2	1	HOFFMAN	HDDUTIE3	RACK MTG ANGLES, 30"CAB./19" EQUIP.
3	1	HOFFMAN	A72P30F2	BACK PANEL, HALF
4	1	HOFFMAN	A/R	SHELF
5	1	HOFFMAN	X-LF16218	FLUORESCENT LIGHT STRIP, 18" LAMP
6	1	HOFFMAN	A-LFSW3	DOOR SWITCH
7	1	HOFFMAN	D-ACDE021	AIR CONDITIONER
8	1	3ICC	T30	CABLE STORAGE
9	1	MCC	299	SURGE SUPPRESSOR W/ 6 OUTLETS
10	2	GTE	———	MODEMS
11	2	GTE	3624	MUX (NEV BRIDGE)
12	.	.	.	.
13	.	.	.	.
14	.	.	.	.
15	.	.	.	.

NOTES

REV.	DATE	DESCRIPTION	BY	APP.
A	4-6-94	ISSUED FOR APPROVAL	G.N.	J.E.

DRAWN BY	GREG NACA	APPR. BY	
DESIGN BY	JOHN EWERS	APPR. BY	
CHECK BY	JOHN EWERS	APPR. BY	
DATE: 4-6-94	FILE: 964-3031 / DATE: 10-05-94		

TRANSDYN CONTROLS, INC.

H-3 TRANS-KOOLAU TUNNEL
TELCO CROSS CONNECT
EQUIPMENT ELEVATION
VOICE CIRCUITS

JOB NO. 3125
CLIENT JOB NO.
SCALE 1/16" = 1"
SHT 1 OF 1
DRAWING NO. 3125-964-3031

EQUIPMENT ELEVATION

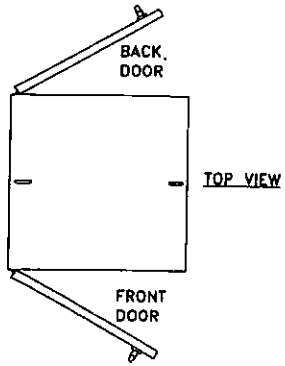

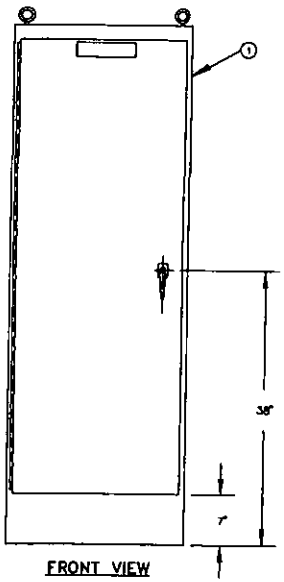

FRONT VIEW

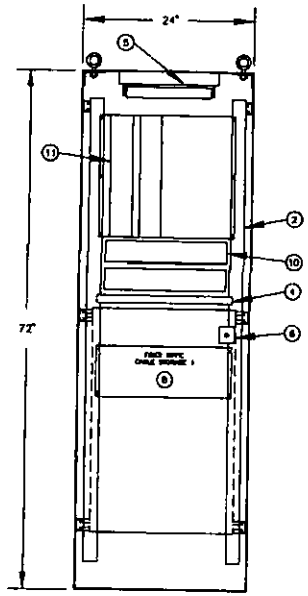

FRONT SECTION VIEW

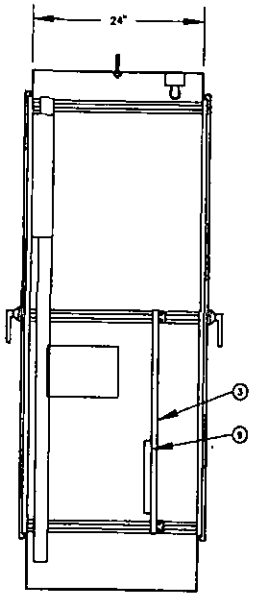

SIDE SECTION VIEW

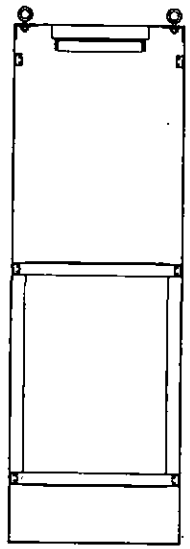

BACK SECTION VIEW

NAMEPLATE SCHEDULE

NO.	QTY	1ST LINE INSCRIPTION	2ND LINE INSCRIPTION	TYPE	LETTER SIZE	SIZE
1	1	VOICE CIRCUITS	GENERAL BUILDING	[illegible]	1/4"	8" X 2"
2						
3						
4						
5						

BILL OF MATERIAL

ITEM	QTY	MFR.	PART NO.	DESCRIPTION
1	1	HOFFMAN	A-72X24F3DA	ENCLOSURE, 72X24X24, NEMA 12
2	1	HOFFMAN	A-72RP24F3	RACK MTG ANGLES
3	1	HOFFMAN	A72PP24F2	BACK PANEL, HALF
4	1	HOFFMAN	A/B	SHELF
5	1	HOFFMAN	X-LF16B10	FLUORESCENT LIGHT STRIP, 18" LAMP
6	1	HOFFMAN	A-LFSV8	DOOR SWITCH
7	.	.	.	.
8	1	BICC	TBB	CABLE STORAGE
9	1	MCG	299	SURGE SUPPRESSOR W/ 6 OUTLETS
10	2	GTE	----	MODEMS
11	2	GTE	3624	MUX (NEW BRIDGE)
12	.	.	.	.
13	.	.	.	.
14	.	.	.	.
15	.	.	.	.

NOTES

REV.	DATE:	DESCRIPTION	BY	APP.
A	4-6-94	ISSUED FOR APPROVAL	G.N.	J.E.

DRAWN BY	GREG NACA	APPR. BY	
DESIGN BY	JOHN EWERS	APPR. BY	
CHECK BY	JOHN EWERS	APPR. BY	

DATE: 4-6-94 FILE: 964-3032 / DATE: 10-05-94

TRANSDYN CONTROLS INC.

H-3 TRANS-KOOLAU TUNNEL
CONTROL BUILDING
EQUIPMENT ELEVATION
VOICE CIRCUITS

JOB NO. 3125
CLIENT JOB NO.
SCALE 1/16" = 1"
SHT 1 OF 1
DRAWING NO. 3225-964-3032

EQUIPMENT ELEVATION

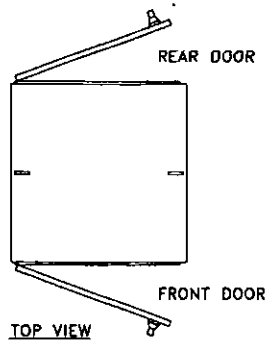

TOP VIEW

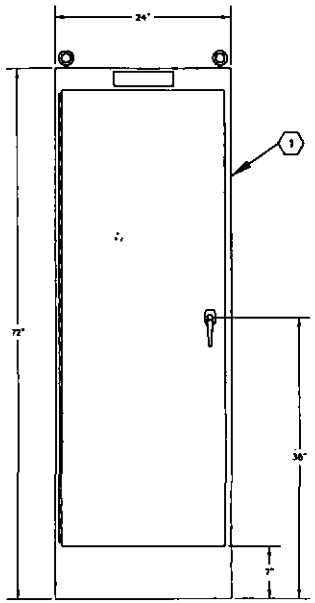

FRONT/REAR ELEVATION

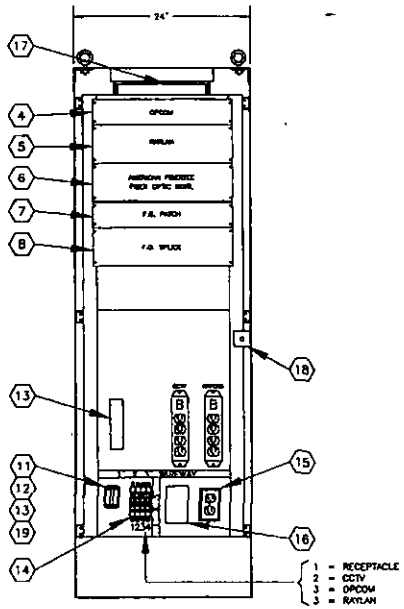

FRONT SECTION VIEW

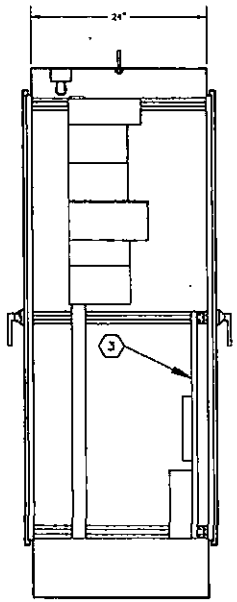

SIDE SECTION VIEW

NAMEPLATE SCHEDULE

NO.	LINE	INSCRIPTION	TYPE	LETTER HGT.	SIZE
1	1	F.O. HVB OMOB	BLK W/ WHT LETTERS	1/4"	8" X 8"
	2				
	3				
2					

BILL OF MATERIAL

ITEM	QTY	MFR.	PART NO.	DESCRIPTION
1	1	HOFFMAN	A-72X24X24SSA	ENCLOSURE, 72X24X24, NEMA 12
2	1	HOFFMAN	A-72X24FS	RACK MOUNTING ANGLES
3	1	HOFFMAN	A72P24F2	BACK PANEL, HALF
4	1	OPCOM	ML44U-1	CHASSIS F.O.
5	1	RAYLAN		CHASSIS LAN
6	1	FIBERTEK	SR-20/1	FIBER OPTIM MULTIPLEXER
7	1	TBD	TBP	F.O. PATCH PANEL
8	1	TBD	TBP	F.O. SPLICE SHELF
9	A/R	ENTRELEC	166500.12	MOUNTING RAIL
10				
11	1	ENTRELEC	110368.16	END SECTION
12	2	ENTRELEC	103002.26	END STOP
13	1	TBD		ETHERNET/FIBER CONVERTER
14	4	SQUARE D	QOU115	CIRCUIT BREAKER, 15 AMP
15	1	TBD	TBD	DUPLEX RECEPTACLE
16	1	MCG	416	SURGE PROTECTOR
17	1	HOFFMAN	A-LFBA2	FLUORESCENT LIGHT
18	2	HOFFMAN	A-LFSWD	DOOR SWITCH

NOTES

1.) FOR POWER DISTRIBUTION WIRING DIAGRAM REFER TO DRAWING: 3125-964-2022

DESIGNED BY	SCOTT RYSTER				
DRAWN BY	R. DUSEY				
CHECKED BY	S.R.				
DATE: 12-12-12	UPDATE: 09-12-95	A REV.	3-11-99 DATE	ISSUED FOR CONSTRUCTION PER CCO-21 DESCRIPTION	R.E. BY / S.R. APP.

TRANSDYN CONTROLS
Pleasanton, California

STATE OF HAWAII
DEPARTMENT OF TRANSPORTATION
H-3 TRANS-KOOLAU TUNNEL
F.O. HVB OMOB - EQUIPMENT ELEVATION

SCALE: AS SHOWN	JOB NO. 3125	
CAD FILE NO. 964-3033	SHT. 1	OF 1
DRAWING NO. 3125-964-3033		REV. A

EQUIPMENT ELEVATION

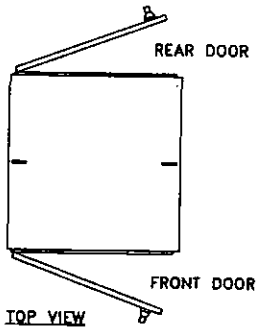

TOP VIEW

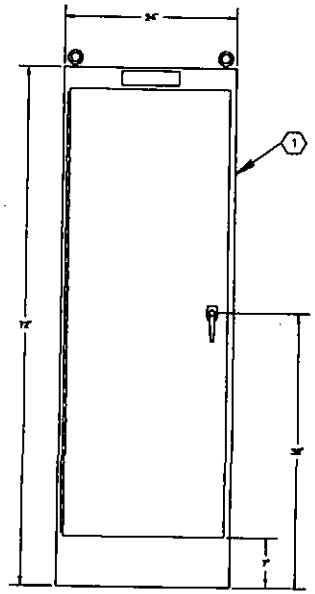

FRONT/REAR ELEVATION

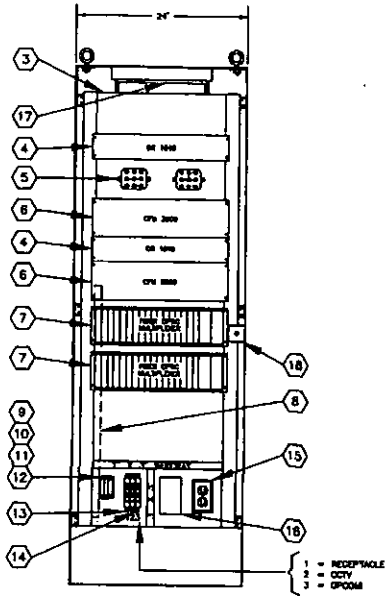

FRONT SECTION VIEW

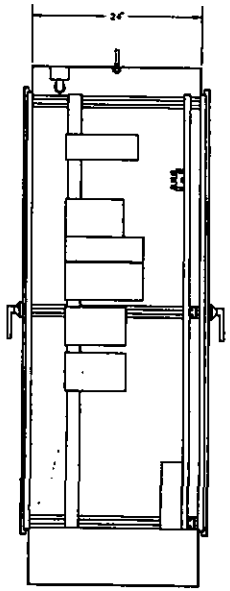

SIDE SECTION VIEW

NAMEPLATE SCHEDULE

NO.	QTY	1ST LINE DESCRIPTION	2ND LINE DESCRIPTION	TYPE	LETTER HEIGHT	SIZE
1	1	CONTROL CENTER	CCTV CABINET 3	[illegible]	1/4"	8" x 8"
2						
3						
4						
5						

BILL OF MATERIAL

ITEM	QTY	MFR.	PART NO.	DESCRIPTION
1	1	HOFFMAN	A-72X24X24SSA	ENCLOSURE, 72X24X24, NEMA 12
2	1	HOFFMAN	A-72BP24F3	BACK MOUNTING ANGLES
3	1	HOFFMAN	A72PE4F1	BACK PANEL, FULL
4	2	CATCL	CR1610	RECEIVER, OPTICAL
5	2	RMS	MAE400FC2	SPLITTER, 8-WAY
6	2	CATCL	CFN 3000	CONTROLLER
7	2	FIBERTEK	SR-8X/1	FIBER OPTIC MULTIPLEXER
8	1	SOUND'R	ACS-1.	6 DUPLEX OUTLET POWER STRIP
9	A/R	ENTRELEC	168590.12	MOUNTING RAIL
10	P	ENTRELEC	115116.07	TERMINAL BLOCK
11	1	ENTRELEC	119360.16	END SECTION
12	2	ENTRELEC	103402.26	END STOP
13	1	SQUARE D	QOU115	CIRCUIT BREAKER, 15 AMP
14	2	SQUARE D	QOU110	CIRCUIT BREAKER, 10 AMP
15	1	TBS	TB3	DUPLEX RECEPTACLE
16	1	MOS	416	SURGE PROTECTOR
17	1	HOFFMAN	A-LF3A2	FLUORESCENT LIGHT
18	2	HOFFMAN	A-LFSVD	DOOR SWITCH

NOTES

1.) FOR POWER DISTRIBUTION WIRING DIAGRAM REFER TO DRAWING: 3125-964-2020

REV.	DATE:	DESCRIPTION	BY	APP.
B	5/27/93	NAMEPLATE	G.M.	J.E.
A	4-9-93	ISSUED FOR APPROVAL	J.B.	J.E.

DRAWN BY	J. BULAWIN	APPR. BY	
DESIGN BY	JOHN EWERS	APPR. BY	
CHECK BY	JOHN EWERS	APPR. BY	
DATE: 4-9-93	FILE: 964-3023 / DATE: 01-19-95		

TRANSDYN CONTROLS, INC.

H-3 TRANS-KOOLAU TUNNEL
CCTV CABINET 3
EQUIPMENT ELEVATION
CONTROL CENTER

JOB NO. 3125
CLIENT JOB NO. 3125
SCALE 1/16" = 1"
SHT 1 OF 1
DRAWING NO. 3125-964-3023

EQUIPMENT ELEVATION

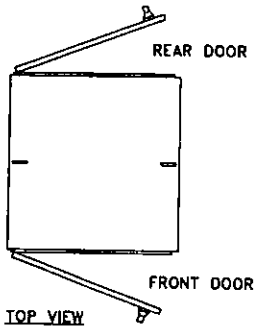

TOP VIEW

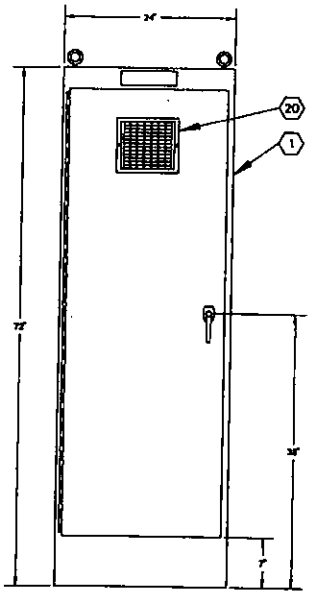

FRONT VIEW

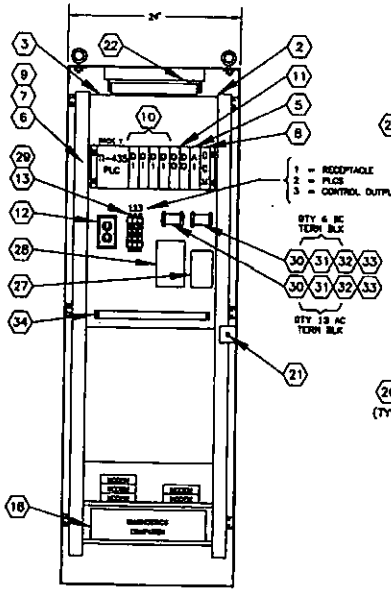

FRONT SECTION VIEW

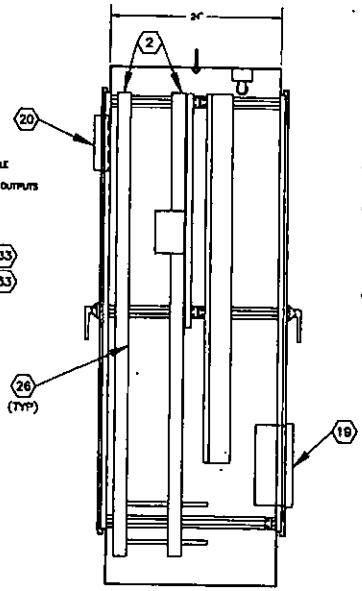

SIDE SECTION VIEW

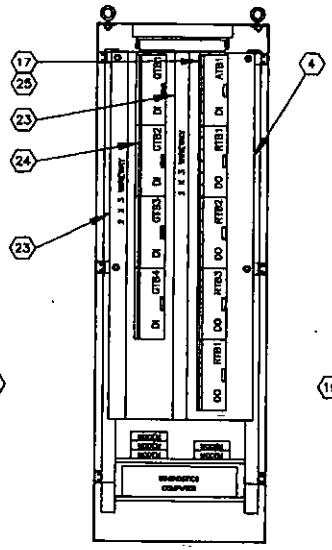

REAR SECTION VIEW

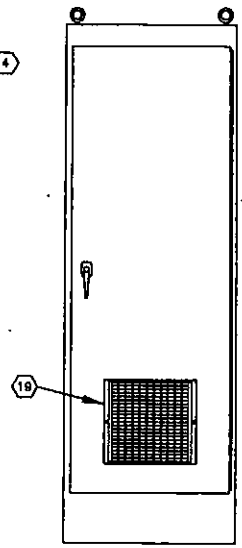

REAR VIEW

NAMEPLATE SCHEDULE

NO.	QTY	1ST LINE DESCRIPTION	2ND LINE DESCRIPTION	TYPE	COLOR/ BACK	SIZE
1	1	CONTROL CENTER	SUPERVISORY & CONTROL	BLK W/ WHT BORDER	1/4"	8" X 2"
2						
3						
4						
5						

LOCATION
CONTROL CENTER

BILL OF MATERIAL

ITEM	QTY	MFR.	PART NO.	DESCRIPTION
1	1	HOFFMAN	A-72X24X6DA	ENCLOSURE, 72X24X24, NEMA 12
2	6	HOFFMAN	A-72BA19TH	BACK MTG ANGLES
3	3	HOFFMAN	A-72PE4FZ	HALF PANEL
4	1	TRC	----	51" X 29" PANEL
5	1	FACTS	405BADC	8 ANALOG INPUT MODULE
6	1	TI	425DC-CPU	PLC CPU
7	1	TI	U-DB9	PLC BASE
8	1	TI	405DM	DATA COMM. MODULE
9	1	TI	G-14M	UV PROM CARTRIDGE
10	4	TI	V-08N	32 DIGITAL INPUT MODULE
11	6	TI	V-16T	32 DIGITAL OUTPUT MODULE
12	1	TBD	.	DUPLEX RECEPTACLE
13	1	SQUARE D	6QU115	CIRCUIT BREAKER, 15 AMP
14				
15				
16				
17	1	POLYBUS	AT32405	ANALOG TERMINAL BLOCK
18	1	DCC	9202X	DIAGNOSTICS COMPUTER
19	1	HOFFMAN	A-FA18AXFN	COOLING FAN PACKAGE
20	1	HOFFMAN	A-EXGR18	EXHAUST GRILL & FILTER
21	1	HOFFMAN	A-LF2X8	DOOR SWITCH
22	1	HOFFMAN	X-LF16G18	FLUORESCENT LIGHT STRIP, 18" LAMP
23	1	PANDUIT	CE2XLG6	VIEWWAY
24	4	POLYBUS	GT32405	GENERAL TERMINAL BLOCK
25	4	POLYBUS	RT32405	RELAY TERMINAL BLOCK
26	6	HOFFMAN	BL24SH	MOUNTING SHELF
27	1	CLCO	X100-24	DC PWR SUPPLY 24V, 100W
28	1	MCG	416	SURGE/RFI SUPPRESSOR
29	2	SQUARE D	6QU110	CIRCUIT BREAKER, 10 AMP
30	A/R	ENTRELEC	168290.12	MTG RAIL
31	20	ENTRELEC	115114.07	TERMINAL BLOCK
32	8	ENTRELEC	118968.16	END SECTION
33	4	ENTRELEC	103988.24	END STOP
34	1	MCG	299	TERM. STRIP W/ SURGE SUPPRESSOR

NOTES

1.) FOR POWER DISTRIBUTION WIRING DIAGRAM REFER TO DRAWING: 3125-964-2017

2.) SEE DWG. 3125-964-3014 FOR (1 OF 2) SC & OPCOM CONTROL CENTER.

REV.	DATE:	DESCRIPTION	BY	APP.
1	1-26-95	CHANGES PER C.O. #45	J.Z.	S.R.
0	9-21-94	SHOP AS-BUILT	J.Z.	S.R.
B	5-27-93	COOLING FAN	G.H.	J.E.
A	4-9-93	ISSUED FOR APPROVAL	J.B.	J.E.

DRAWN BY	J. BULAWN	APPR. BY	
DESIGN BY	JOHN EWERS	APPR. BY	
CHECK BY	JOHN EWERS	APPR. BY	

DATE: 4-9-93 FILE: 964-3024 / DATE: 01-31-95

TRANSDYN CONTROLS, INC.

H-3 TRANS-KOOLAU TUNNEL
RTU EG/SC & OPCOM (2 OF 2)
EQUIPMENT ELEVATION
CONTROL CENTER

JOB NO. 3125
CLIENT JOB NO. 3125
SCALE 1/16" = 1"
SHT 1 OF 1
DRAWING NO. 3125-964-3024

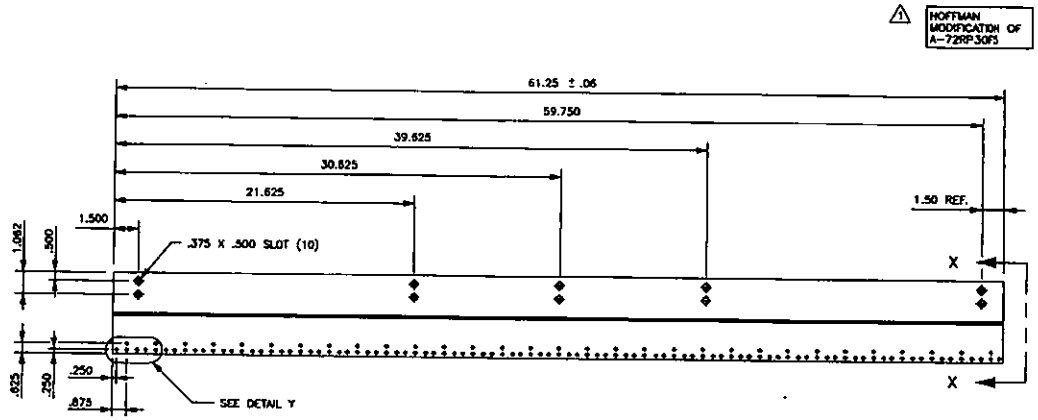

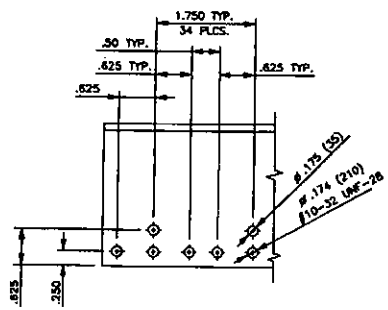

DETAIL Y

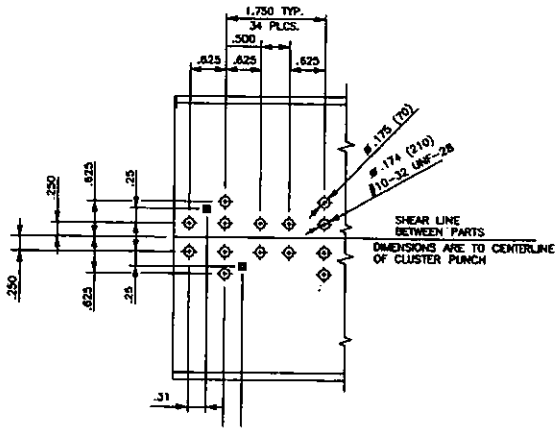

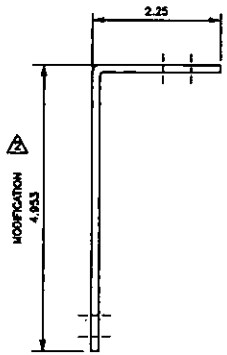

VIEW X-X

NOTES

1. MODIFICATION OF HOFFMAN CAT NO. A-72RP30F5 (MODIFIED) PART NO. 22312-002 (MODIFIED)
2. MODIFICATION WAS: 2.453 IS: 4.953

REV.	DATE:	DESCRIPTION	BY	APP.
0	8-1-94	ISSUED FOR CONSTRUCTION	G.N.	N.W.

DRAWN BY	DAVID DREYER	APPR. BY	
DESIGN BY	JOHN EWERS	APPR. BY	
CHECK BY	JOHN EWERS	APPR. BY	
DATE: 4-28-1993	FILE: 964-3025 / DATE: 10-05-94		

TRANSDYN CONTROLS, INC.

HAWAII H-3
MODIFICATION DRAWING
RACK MTG ANGLE
30" CABINET / 19" RACK

JOB NO. 3125
CLIENT JOB NO.
SCALE N/A
SHT 1 OF 1
DRAWING NO. 3125-964-3025

EQUIPMENT ELEVATION

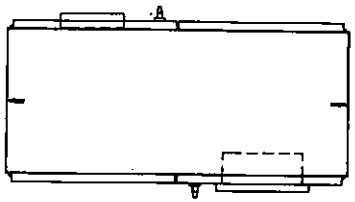

TOP VIEW

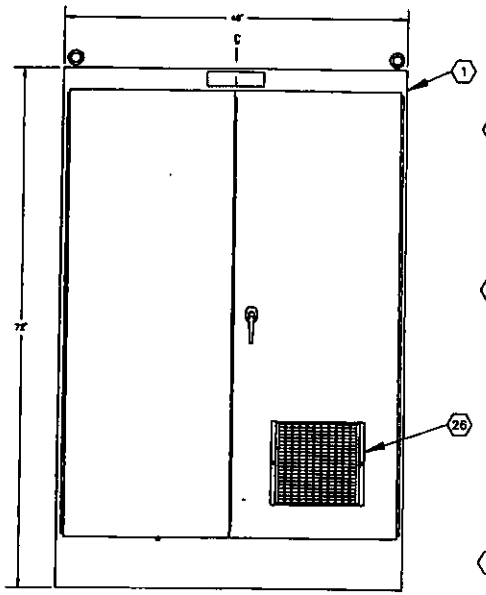

FRONT ELEVATION

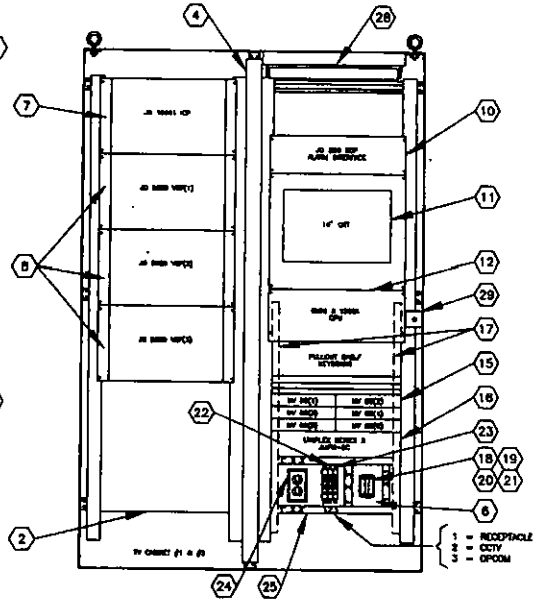

FRONT SECTION VIEW

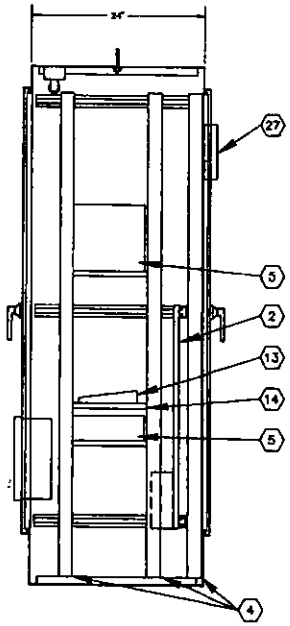

SIDE SECTION VIEW

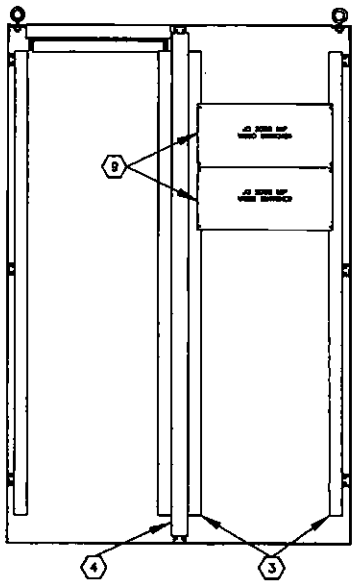

REAR SECTION VIEW

NAMEPLATE SCHEDULE

NO.	QTY	1ST LINE DESCRIPTION	2ND LINE DESCRIPTION	TYPE	LETTER SIZE	SIZE
1	1	CONSOL CENTER	CCTV CABINET 1 & 2	[illegible]	1/4"	6" X 6"
2						
3						
4						
5						

BILL OF MATERIAL

ITEM	QTY	MFR.	PART NO.	DESCRIPTION
1	1	HOFFMAN	A-72X48NFSDAS	ENCLOSURE, 72X48X24, NEMA 12
2	1	HOFFMAN	A-72P24FS	BACK PANEL, HALF
3	4	HOFFMAN	A-72SA19TM	BACK RTO ANGLES
4	2	HOFFMAN	A-72F3CPS	CENTER PANEL SUPPORT
5	2	HOFFMAN	DLE43H	MOUNTING SHELF
6				
7	1	JAVELIN	JD19061CP	.
8	3	JAVELIN	JD2824VCP	
9	2	JAVELIN	JD2403KIP	VIDEO SWITCHER
10	1	JAVELIN	JD2868DP	ALARM INTERFACE
11	1	TED	T80	14" CRT MONITOR
12	1	JAVELIN	1508A	CPU DMI 1508A
13	1	JAVELIN	NA	KEYBOARD
14	1	HOFFMAN	D-LE43HP	PULLOUT KEYBOARD SHELF
15	6	RODOT	HV85	COLOR MULTIVISION PROCESSOR
16	1	UNIPLEX	JUPX-8C	SERIES 8
17	2	SOUND'N	ACE-1	6 DUPLEX OUTLET POWER STRIP
18	A/R	ENTRELEC	168590.12	MOUNTING RAIL
19	A/R	ENTRELEC	115116.07	TERMINAL BLOCK
20	1	ENTRELEC	118360.16	END SECTION
21	2	ENTRELEC	103492.26	END STOP
22	1	SQUARE D	QOU115	CIRCUIT BREAKER, 15 AMP
23	2	SQUARE D	QOU110	CIRCUIT BREAKER, 10 AMP
24	1	TBB	TBB	DUPLEX RECEPTACLE
25	1	MCG	414	SURGE/ARRT SUPPRESSOR
26	1	HOFFMAN	A-PA18AXFN	COOLING FAN PACKAGE
27	1	HOFFMAN	A-CXGR10	EXHAUST GRILLE & FILTER
28	1	HOFFMAN	X-LF16S10	FLUORESCENT LIGHT STRIP, 18" LAMP
29	4	HOFFMAN	A-LFSV8	DOOR SWITCH

NOTES

1.) FOR POWER DISTRIBUTION WIRING DIAGRAM REFER TO DRAWING: 3125-964-2019

REV.	DATE:	DESCRIPTION	BY	APP.
B	5/27/93	COOLING FAN	G.N.	J.E.
A	4-9-93	ISSUED FOR APPROVAL	G.N.	J.E.

DRAWN BY	DAVID DREYER	APPR. BY	
DESIGN BY	JOHN EWERS	APPR. BY	
CHECK BY	JOHN EWERS	APPR. BY	
DATE: 4-9-93	FILE: 964-3022 / DATE: 01-19-95		

TRANSDYN CONTROLS, INC.

H-3 TRANS-KOOLAU TUNNEL
CCTV CABINETS 1 & 2
EQUIPMENT ELEVATION
CONTROL CENTER

JOB NO. 3125
CLIENT JOB NO.
SCALE 1/16" = 1"
SHT 1 OF 1
DRAWING NO. 3125-964-3022

SCADA System

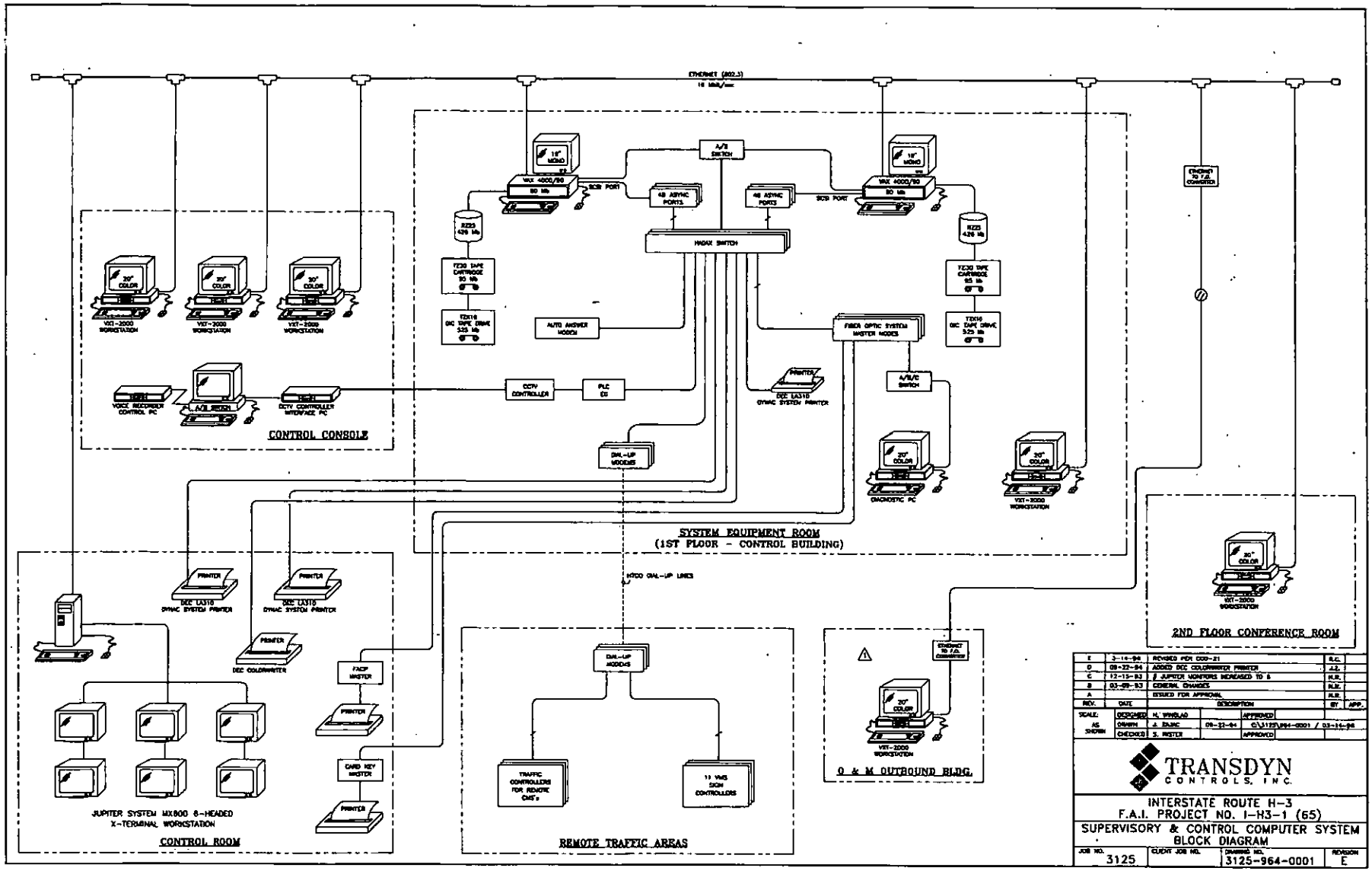

REV.	DATE	DESCRIPTION	BY	APP.
E	3-16-94	REVISED PER CCO-21	R.C.	
D	09-22-94	ADDED DEC COLORWRITER PRINTER	J.J.	
C	12-15-93	8 JUPITER MONITORS INCREASED TO 6	R.R.	
B	03-09-93	GENERAL CHANGES	R.R.	
A		ISSUED FOR APPROVAL	R.R.	

SCALE: AS SHOWN

DESIGNED: H. WINGLAD — APPROVED

DRAWN: J. DUNC — 09-22-94 — C:\3125\H94-0001 / 03-16-94

CHECKED: S. MASTER — APPROVED

TRANSDYN CONTROLS, INC.

INTERSTATE ROUTE H-3
F.A.I. PROJECT NO. I-H3-1 (65)

SUPERVISORY & CONTROL COMPUTER SYSTEM BLOCK DIAGRAM

JOB NO.	CLIENT JOB NO.	DRAWING NO.	REVISION
3125		3125-964-0001	E

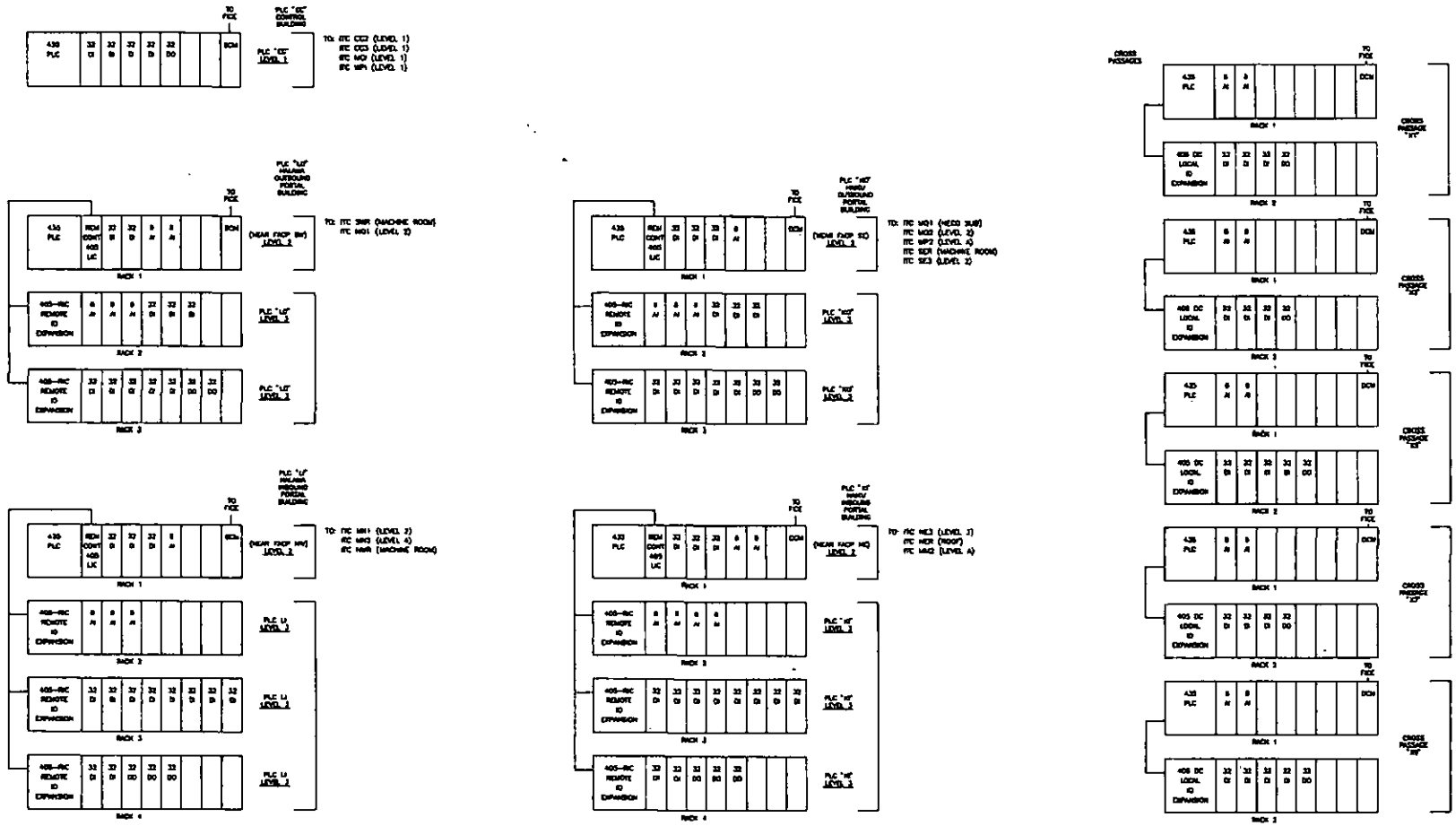

NOTES

REV.	DATE:	DESCRIPTION	BY	APP.
B	3/31/93	8 AI MODULES	G.H.	J.E.
A	2/11/93	GENERAL CHANGES	D.D.	J.E.

DRAWN BY: DAVID DREYER — APPR. BY:
DESIGN BY: JOHN EWERS — APPR. BY:
CHECK BY: JOHN EWERS — APPR. BY:
DATE: 1-23-1993 FILE: 964-0002 / DATE: 06-29-94

TRANSDYN CONTROLS, INC.

H-3 TRANS-KOOLAU TUNNEL
BLOCK DIAGRAM
PLC LAYOUT

JOB NO. 3125
CLIENT JOB NO.
SCALE N/A
SHT 1 OF 1
DRAWING NO. 3125-964-0002

Fiber Optic Cable Routing

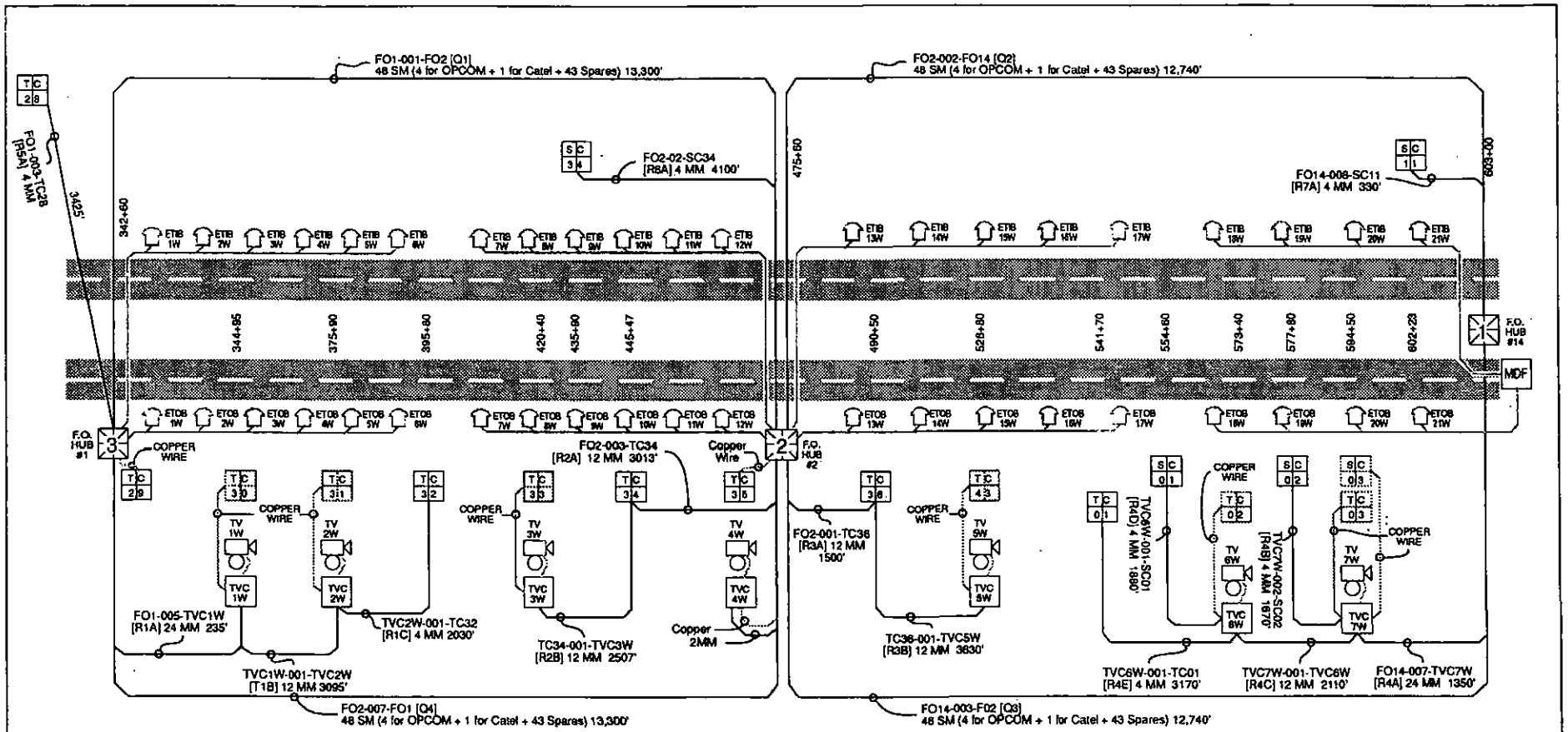

NOTES:

1. FIBER COUNTS SHOWN REFER TO ACTUAL # OF FIBERS IN CABLE BUNDLE.
2. MAP NOT TO SCALE
3. LETTER SHOWN IN SQUARE BRACKETS [ ] NEAR CABLE # IS A CABLE ALIAS

= Opcom fiber optic node
= Traffic Controller
= Programmable Logic Controller
= VMS Sign Controller
= CCTV Control Cabinet
= CCTV Camera

4 MM = 4 Fiber Multimode Cable
12 MM = 12 Fiber Multimode Cable
24 MM = 24 Fiber Multimode Cable
48 SM = 48 Fiber Single Mode Cable
= Copper Wire Connection

REV.	DATE	DESCRIPTION	BY	APP.
D	3/15/94	GENERAL CHANGES	NW	
C	8/19/93	ADDED WIRE TAG NUMBERS	RW	
B	8/20/93	CABLE LENGTHS AND SIZES REVISED	NW	
A	6/17/93	GENERAL CHANGES	NW	

SCALE: NONE
DESIGNED: N. WINBLAD 5/11/93
DRAWN: N. WINBLAD
CHECKED
APPROVED
APPROVED
FILE: FOHWRTG.CDR

Transdyn Controls, Inc.

OPTICAL FIBER ROUTING

HALAWA APPROACH

JOB NO.	CLIENT JOB NO.		REVISION
3125	I-H3-I(65)	3125-964-2205	D

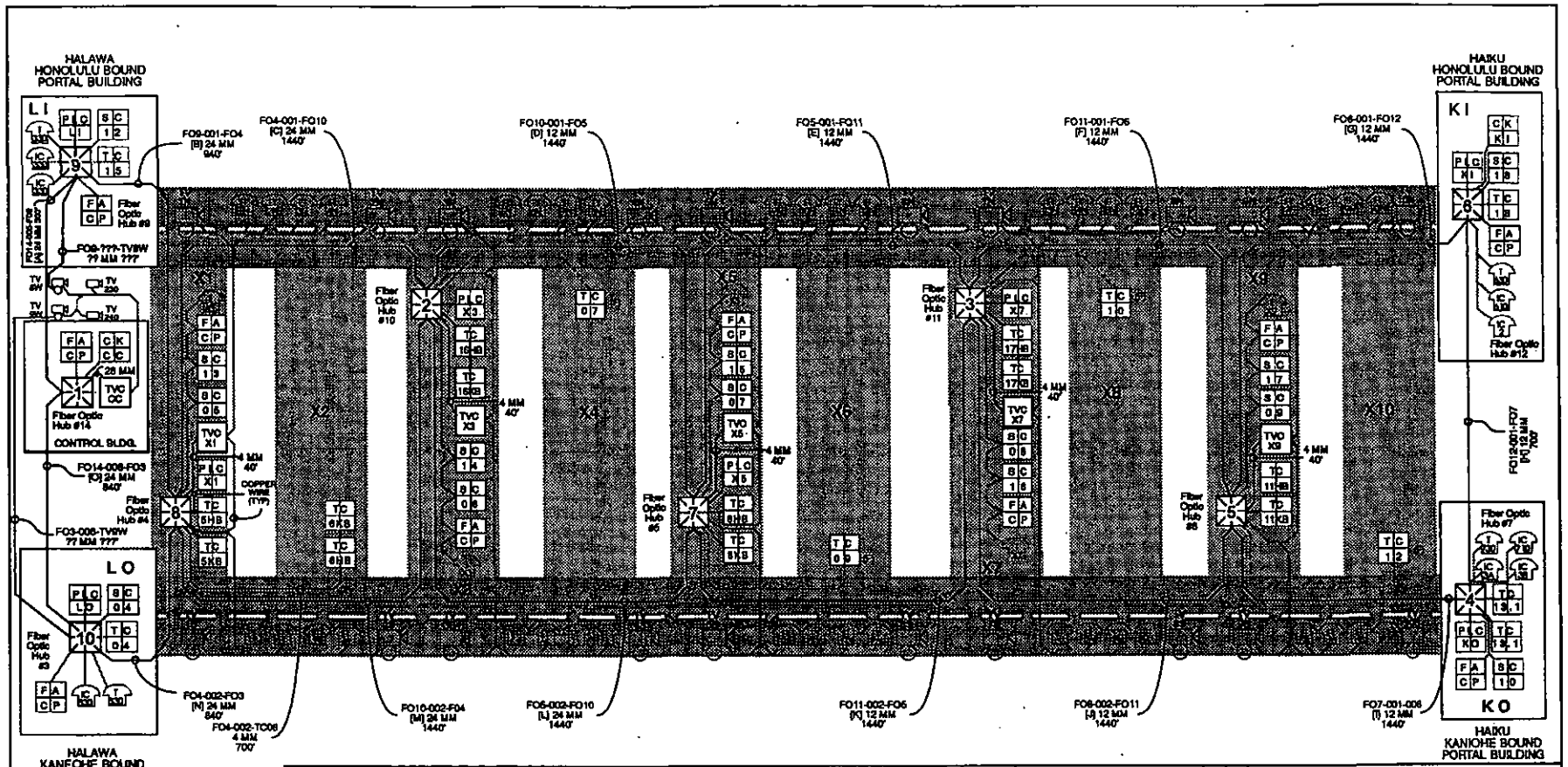

NOTES:

1. FIBER COUNTS SHOWN REFER TO ACTUAL # OF FIBERS IN CABLE BUNDLE.
2. LETTER SHOWN IN SQUARE BRACKETS [ ] NEAR CABLE # IS A CABLE ALIAS.

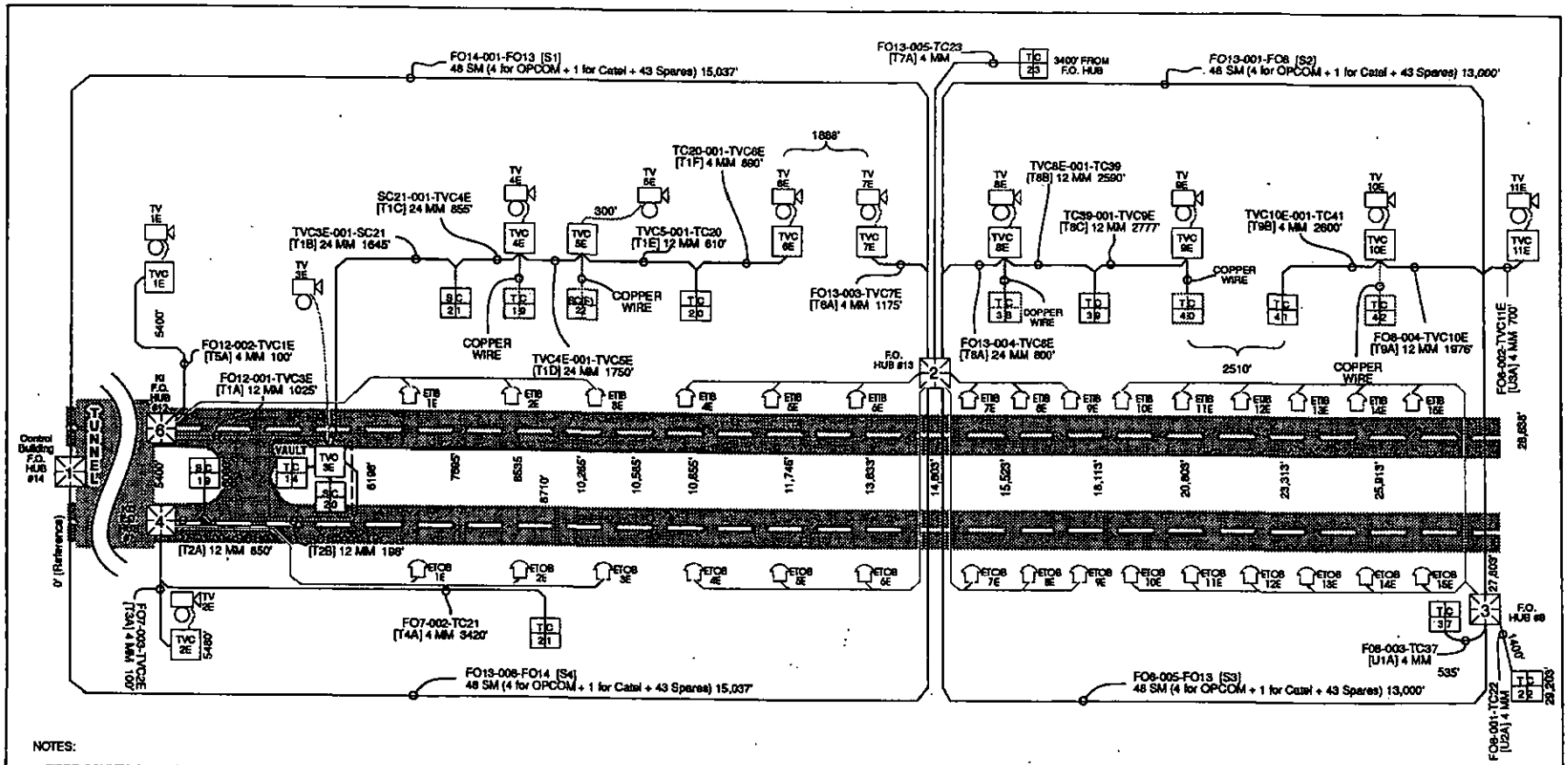

NOTES:

1. FIBER COUNTS SHOWN REFER TO ACTUAL # OF FIBERS IN CABLE BUNDLE.
2. MAP NOT TO SCALE.
3. LETTER SHOWN IN SQUARE BRACKETS [ ] NEAR CABLE # IS A CABLE ALIAS.

= Opcom fiber optic node
= Traffic Controller
= Programmable Logic Controller
= VMS Sign Controller
= CCTV Control Cabinet
= CCTV Camera

4 MM = 4 Fiber Multimode Cable
12 MM = 12 Fiber Multimode Cable
24 MM = 24 Fiber Multimode Cable
48 SM = 48 Single Mode Fibers
= Copper Wire Connection

REV.	DATE	DESCRIPTION	BY	APP.
0	5/8/04	RELEASED FOR CONSTRUCTION	HW	

SCALE NONE | DESIGNED H. WINBLAD 5/11/03 | DRAWN H. WINBLAD | CHECKED | APPROVED | FILE: FOHKRTG.CDR | APPROVED

Transdyn Controls, Inc.

OPTICAL FIBER ROUTING

HAIKU APPROACH

JOB NO.	CLIENT JOB NO.		REVISION
3125	I-H3-I(65)	3125-964-2207	0

H3 - Fiber Optic Data Network Rings - Block Diagram (Nodes and Components)

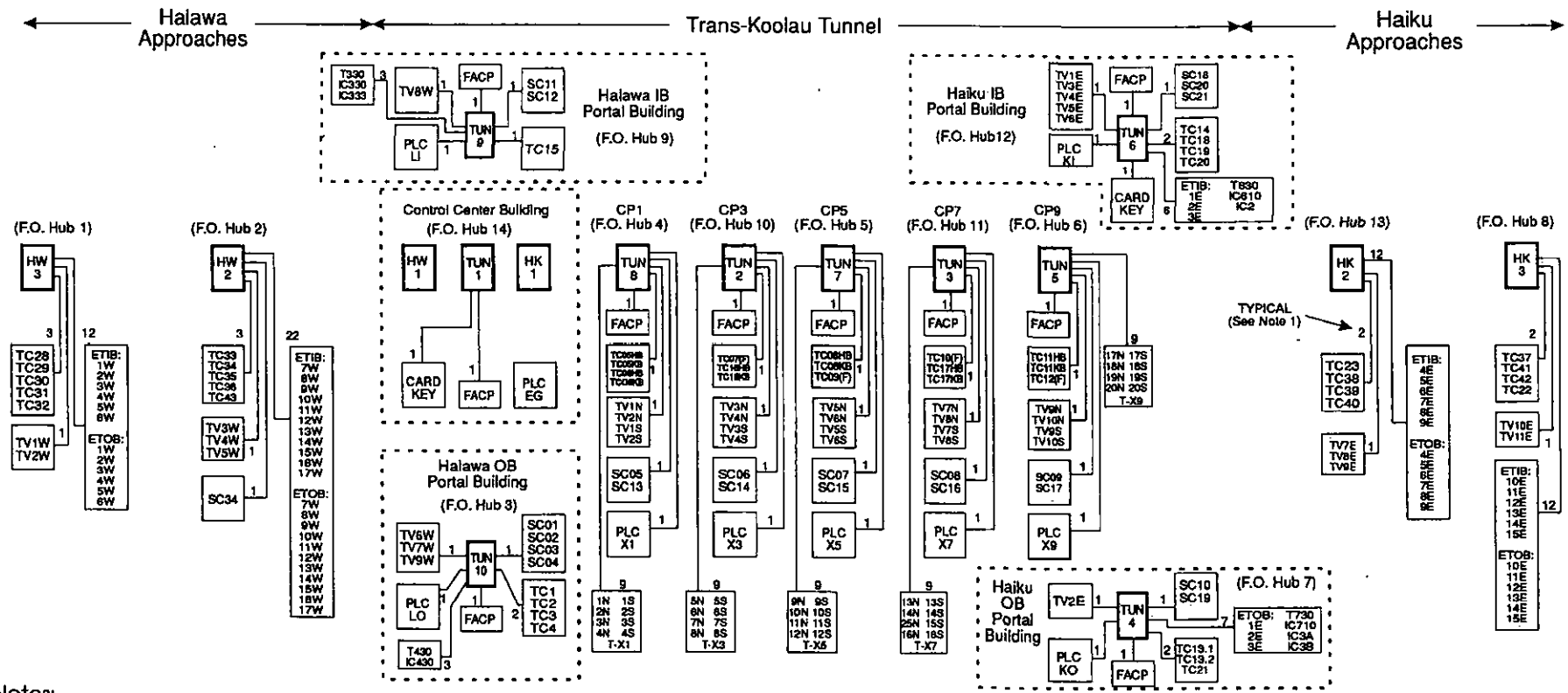

Notes:

1.) NUMBERS SHOWN NEXT TO COMPONENT CONNECTIONS ARE THE NUMBER OF PORTS USED ON FIBER OPTIC MUX.

2.) EMERGENCY TELEPHONES NOT SHOWN ON THIS DRAWING ARE HARDWIRED TO THE TELEPHONE SWITCH THROUGH THE MAIN DISTRIBUTION FRAME.

PLC = PROGRAMMABLE LOGIC CONTROLLER (REPLACES RTU)
TV = CCTV CAMERA PAN TILT ZOOM CONTROLLER
TC = TRAFFIC CONTROLLER
SC = VARIABLE MESSAGE SIGN CONTROLLER
ET = EMERGENCY TELEPHONE (IB = INBOUND, OB = OUTBOUND)
FACP = FIRE ALARM CONTROL PANEL

REV.	DATE	DESCRIPTION	BY	APP.
D	[illegible]	GENERAL CHANGES	MW	
C	[illegible]	TV2E, BOB NODES CHANGED	MW	
B	[illegible]	GENERAL CHANGES	MW	
A	[illegible]	GENERAL CHANGES FOR HS FEEDBACK	MW	

SCALE: AS SHOWN | DESIGNED | DRAWN | CHECKED | R. WEBELAR | 120VAC | APPROVED | FILE: FOLANBO.CDR | APPROVED

Transdyn Controls, Inc.

INTERSTATE ROUTE H3

DATA NETWORK COMPONENTS BLOCK DIAGRAM

JOB NO.	CLIENT JOB NO.		REV.
3125	I-H3-I(65)	3125-964-0102	

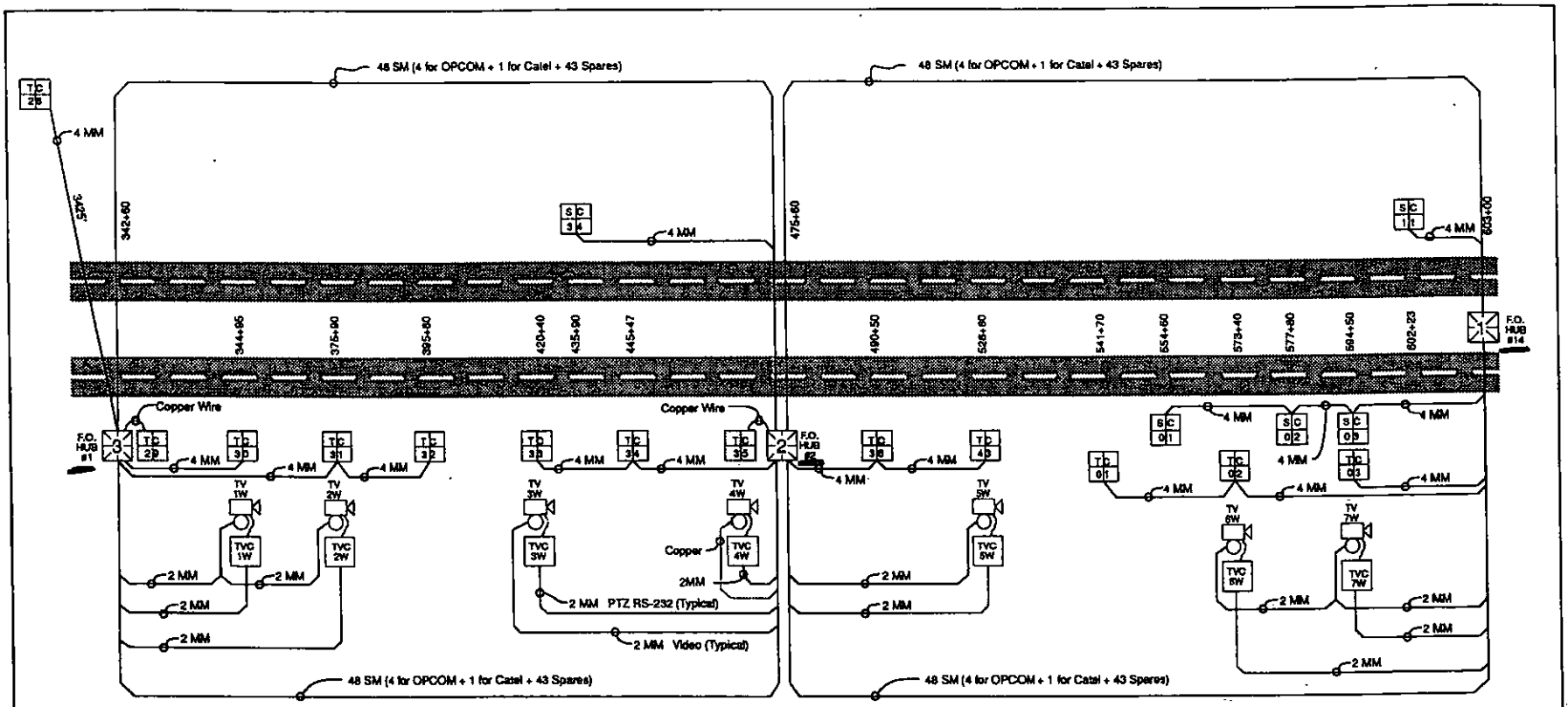

NOTES:

1. FIBER COUNTS SHOWN ARE TWICE THE ACTUAL QUANTITY NEEDED BY EQUIPMENT SHOWN TO PROVIDE 100% SPARES.
2. FIBER CABLES SHOWN WILL BE COMBINED INTO SINGLE CABLE TO SIMPLIFY PULLING. SEE CABLE ROUTING DIAGRAM 3125-964-0208 FOR ACTUAL CABLE PULLS.

- = Opcom fiber optic node
- = Traffic Controller
- = Programmable Logic Controller
- = VMS Sign Controller
- = CCTV Control Cabinet
- = CCTV Camera
- 12 MM = 12 Multimode Fibers
- 48 SM = 48 Single Mode Fibers
- = Copper Wire Connection

REV.	DATE	DESCRIPTION	BY	APP.
0	5/4/99	RELEASE FOR CONSTRUCTION	NW	

SCALE: NONE
DESIGNED: N. WINSLAD 5/1/99
DRAWN: N. WINSLAD
CHECKED
APPROVED
APPROVED
FILE: FORMSUM.DGN

Transdyn Controls, Inc.

OPTICAL FIBER SUMMARY

HALAWA APPROACH

JOB NO.	CLIENT JOB NO.		REVISION
3125	I-H3-I(65)	3125-964-0103	

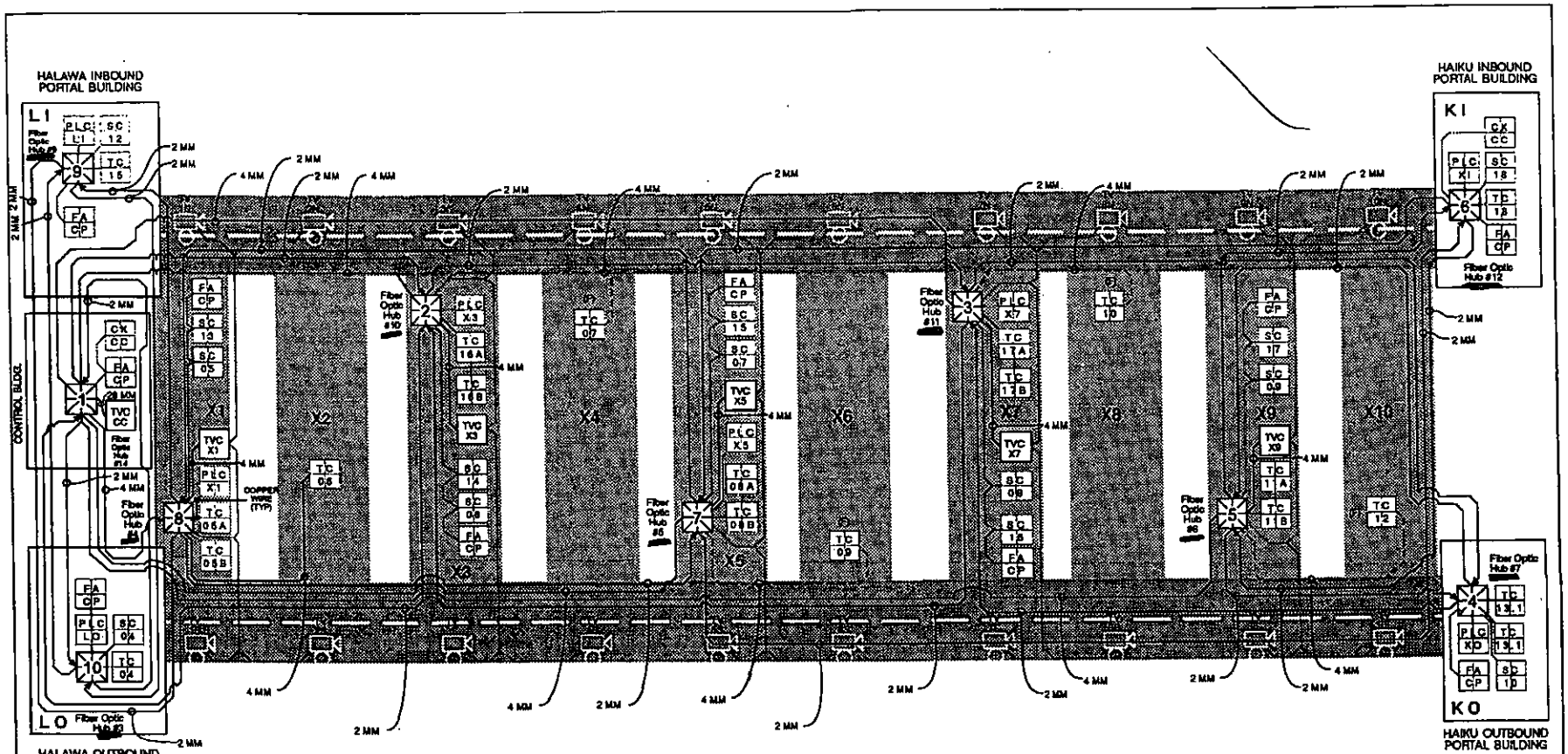

NOTES:

1. FIBER COUNTS SHOWN ARE TWICE THE ACTUAL QUANTITY NEEDED BY EQUIPMENT SHOWN TO PROVIDE 100% SPARES.
2. FIBER CABLES SHOWN WILL BE COMBINED INTO SINGLE CABLE TO SIMPLIFY PULLING. SEE CABLE ROUTING DIAGRAM 3125-964-2206 FOR ACTUAL CABLE PULLS.

Opcom fiber optic node	Fire Alarm Control Panel
Traffic Controller	Card Key Master
Programmable Logic Controller	(F) = Future
VMS Sign Controller	CCTV Control Cabinet
CCTV Camera	

12 MM = 12 Multimode Fibers
48 SM = 48 Single Mode Fibers
- - - = Future Fiber Optic Cable
—— = Copper Wire Connection

REV.	DATE	DESCRIPTION	BY	APP.
0	5/8/94	RELEASED FOR CONSTRUCTION	NW	

SCALE: NONE
DESIGNED: H. WINBLAD 5/11/93
DRAWN: H. WINBLAD
CHECKED
APPROVED
FILE: FOTUNSUM.CDR

Transdyn Controls, Inc.

OPTICAL FIBER SUMMARY

TUNNEL AREA

JOB NO.	CLIENT JOB NO.	REVISION
3125	I-H3-I(65) 3125-964-0104	

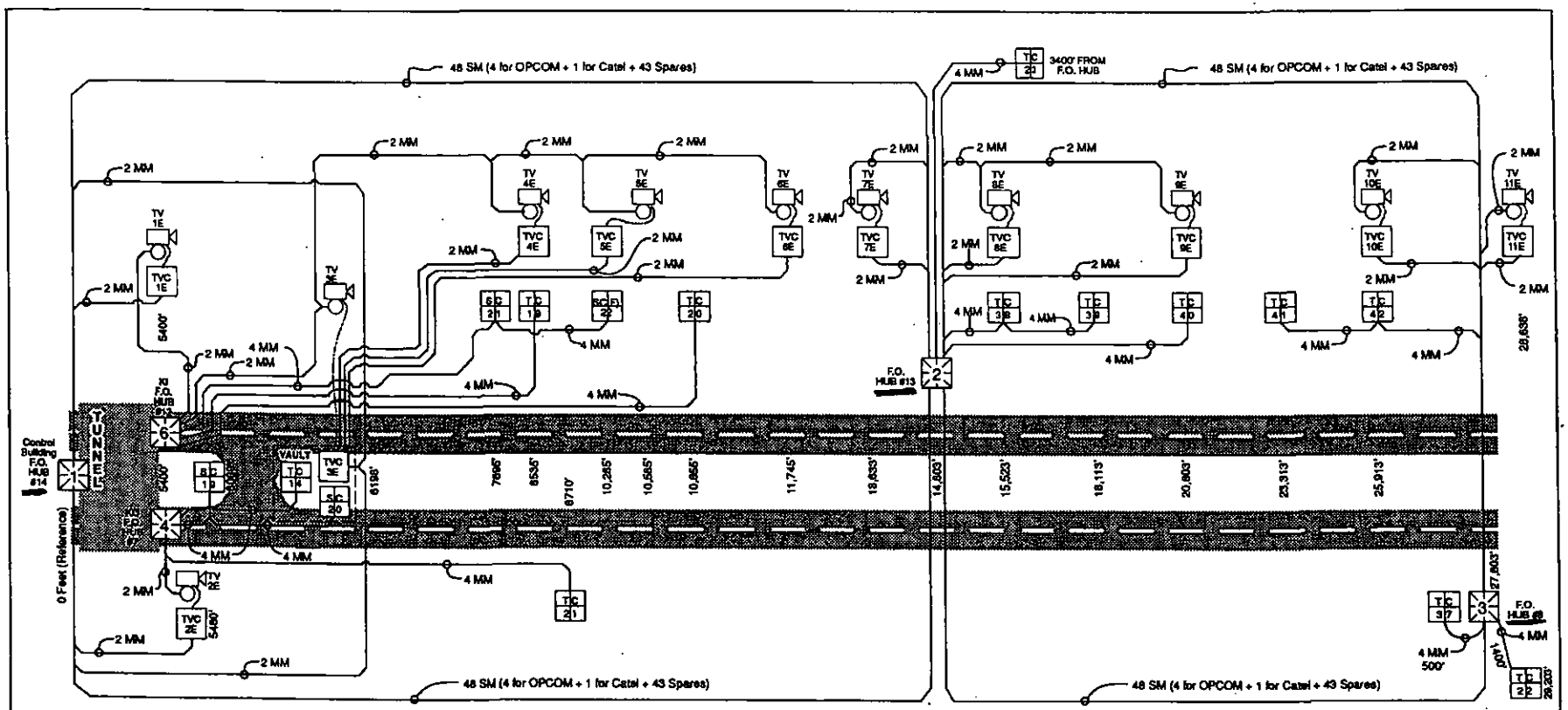
48 SM (4 for OPCOM + 1 for Catel + 43 Spares)
3400' FROM F.O. HUB
2 MM
4 MM
TV 1E
TVC 1E
TV 4E
TVC 4E
TV 5E
TVC 5E
TV 6E
TVC 6E
TV 7E
TVC 7E
TV 8E
TVC 8E
TV 9E
TVC 9E
TV 10E
TVC 10E
TV 11E
TVC 11E
TV 2E
TVC 2E
TUNNEL
VAULT
Control Building F.O. HUB #14
F.O. HUB #13
F.O. HUB #8
0 Feet (Reference)
5400'
5480'
6198'
7696'
8535'
8710'
10,285'
10,585'
10,885'
11,745'
13,533'
14,803'
15,523'
18,113'
20,803'
23,313'
25,913'
28,636'
27,803'
28,203'
4 MM 500'
NOTES:
1. FIBER COUNTS SHOWN ARE TWICE THE ACTUAL QUANTITY NEEDED BY EQUIPMENT SHOWN TO PROVIDE 100% SPARES.
2. FIBER CABLES SHOWN WILL BE COMBINED INTO SINGLE CABLE TO SIMPLIFY PULLING. SEE CABLE ROUTING DIAGRAM 3125-964-2207 FOR ACTUAL CABLE PULLS.
= Opcom fiber optic node
= Traffic Controller
= Programmable Logic Controller
= VMS Sign Controller
= CCTV Control Cabinet
= CCTV Camera
12 MM = 12 Multimode Fibers
48 SM = 48 Single Mode Fibers
= Copper Wire Connection
Transdyn Controls, Inc.
OPTICAL FIBER SUMMARY
HAIKU APPROACH
JOB NO. 3125
CLIENT JOB NO. I-H3-I(65)
3125-964-0105
REVISION

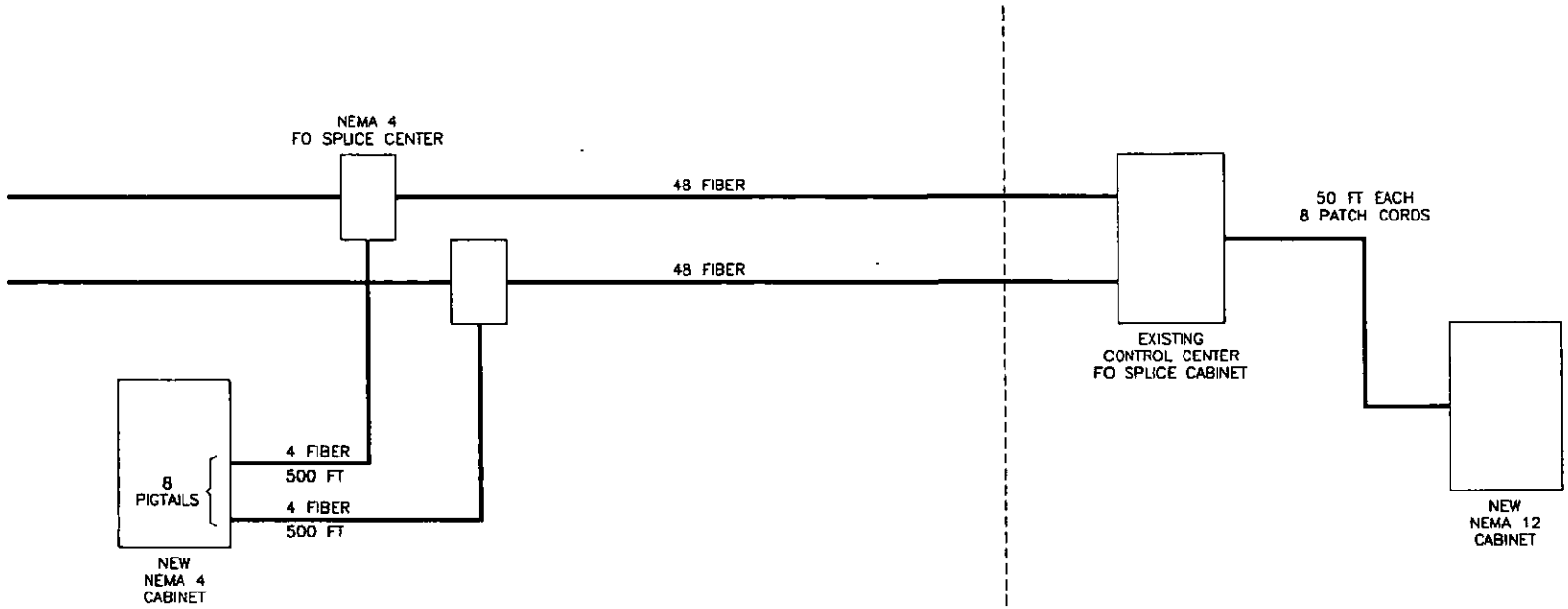

NOTES

REV.	DATE:	DESCRIPTION	BY	APP.
A	4-6-94	ISSUED FOR APPROVAL	G.M.	J.E.

DRAWN BY	GREG MACA	APPR. BY	
DESIGN BY	JOHN EWERS	APPR. BY	
CHECK BY	JOHN EWERS	APPR. BY	
DATE: 4-6-94	FILE: 964-0003 / DATE: 06-29-94		

TRANSDYN CONTROLS, INC.

H-3 TRANS-KOOLAU TUNNEL
TELCO CROSS CONNECT
BLOCK DIAGRAM
VOICE CIRCUITS

JOB NO. 3125
CLIENT JOB NO.
SCALE
SHT 1 OF 1
DRAWING NO. 3125-964-0003

Typical FO Termination Details

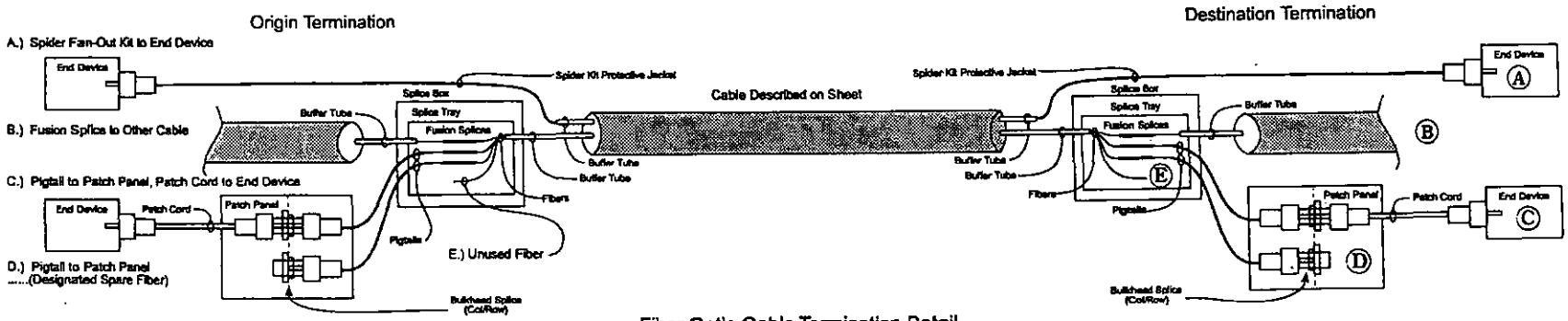

Fiber Optic Cable Termination Detail

A - Spider fan-out kit to end device
B - Fusion splice to other cable
C - Pigtail to patch panel, patch cord to end device
D - Pigtail to patch panel (designated spare fiber)
E - Unused (dark) fiber

Origin Termnination FO Hub #10 | Cable #: FO10-002-FO4 | Destination Termination: FO Hub #4

M

Origin Term. Type	Cable # (B) -or- Patchcord # (C) on Origin End	Origin Buffer Color (B) - or - End Device (A)	Origin Fiber Color (B)	Origin Splice Box # (B, C, D,or E)	Origin Splice Tray # (B, C, D, or E)	Origin Patch Box # (C or D)	Origin Patch Box Col/Row # (C or D)	Buffer Color	Fiber Color	Function	Functional Origin	Functional Destination	Dest. Term. Type	Cable # (B) - or - Patchcord # (C) on Destination Side	Destination Buffer Color (B) - or - End Device (A)	Dest. Fiber Color (B)	Dest. Splice Box # (B, C, D, or E)	Dest. Splice Tray # (B, C, D, or E)	Dest. Patch Box # (C or D)	Dest. Col/Row # (C or D)
B	FO5-002-FO10	BLU	BLU	SBFO10-1	3/1	N/A	N/A	BLU	BLU	TUN DNS SEC RING	OPCOM NODE 8	OPCOM NODE 7	C	FO4-103-OPCOM8	N/A	N/A	SBFO4-1	3/1	PBFO4-1	2/5
C	FO10-108-OPCOM2	N/A	N/A	SBFO10-1	3/13	PBFO10-1	1/4	BLU	ORG	TUN DNS SEC RING	OPCOM NODE 2	OPCOM NODE 1	B	FO4-002-FO3	BLU	ORG	SBFO4-1	3/2	N/A	N/A
B	FO5-002-FO10	BLU	GRN	SBFO10-1	3/3	N/A	N/A	BLU	GRN	TV 9S, 10S (Video)	TVC-X9	TVC-CC	B	FO4-002-FO3	BLU	GRN	SBFO4-1	3/3	N/A	N/A
B	FO5-002-FO10	BLU	BRN	SBFO10-1	3/4	N/A	N/A	BLU	BRN	TV 9N, 10N (Video)	TVC-X9	TVC-CC	B	FO4-002-FO3	BLU	BRN	SBFO4-1	3/4	N/A	N/A
B	FO5-002-FO10	BLU	SLT	SBFO10-1	3/5	N/A	N/A	BLU	SLT	TV 2E (Video)	TVC-2E	TVC-CC	B	FO4-002-FO3	BLU	SLT	SBFO4-1	3/5	N/A	N/A
E	N/A	N/A	N/A	SBFO10-1	3/6	N/A	N/A	BLU	WHT	UNUSED	N/A	N/A	E	N/A	N/A	N/A	SBFO4-1	3/6	N/A	N/A
B	FO5-002-FO10	ORG	BLU	SBFO10-1	3/7	N/A	N/A	ORG	BLU	(Spare) TUN DNS SEC RING	OPCOM NODE 8	OPCOM NODE 7	D	N/A	N/A	N/A	SBFO4-1	3/7	PBFO4-1	2/6
D	N/A	N/A	N/A	SBFO10-1	3/8	PBFO10-1	1/5	ORG	ORG	(Spare) TUN DNS SEC RING	OPCOM NODE 2	OPCOM NODE 1	B	FO4-002-FO3	ORG	ORG	SBFO4-1	3/8	N/A	N/A
B	FO5-002-FO10	ORG	GRN	SBFO10-1	3/9	N/A	N/A	ORG	GRN	(Spare) TV 9S, 10S (Video)	TVC-X9	TVC-CC	B	FO4-002-FO3	ORG	GRN	SBFO4-1	3/9	N/A	N/A
B	FO5-002-FO10	ORG	BRN	SBFO10-1	3/10	N/A	N/A	ORG	BRN	(Spare) TV 9N, 10N (Video)	TVC-X9	TVC-CC	B	FO4-002-FO3	ORG	BRN	SBFO4-1	3/10	N/A	N/A
B	FO5-002-FO10	ORG	SLT	SBFO10-1	3/11	N/A	N/A	ORG	SLT	(Spare) TV 2E (Video)	TVC-2E	TVC-CC	B	FO4-002-FO3	ORG	SLT	SBFO4-1	3/11	N/A	N/A
E	N/A	N/A	N/A	SBFO10-1	3/12	N/A	N/A	ORG	WHT	UNUSED	N/A	N/A	E	N/A	N/A	N/A	SBFO4-1	3/12	N/A	N/A
B	FO5-002-FO10	GRN	BLU	SBFO10-1	4/1	PBFO10-1	1/6	GRN	BLU	TV 5S, 6S (Video)	TVC-X5	TVC-CC	B	FO4-002-FO3	GRN	BLU	SBFO4-1	4/1	N/A	N/A
B	FO5-002-FO10	GRN	ORG	SBFO10-1	4/2	N/A	N/A	GRN	ORG	TV 5N, 6N (Video)	TVC-X5	TVC-CC	B	FO4-002-FO3	GRN	ORG	SBFO4-1	4/2	N/A	N/A
E	N/A	N/A	N/A	SBFO10-1	4/3	N/A	N/A	GRN	GRN	UNUSED	UNUSED	UNUSED	E	N/A	N/A	N/A	SBFO4-1	4/3	N/A	N/A
E	N/A	N/A	N/A	SBFO10-1	4/4	N/A	N/A	GRN	BRN	UNUSED	UNUSED	UNUSED	E	N/A	N/A	N/A	SBFO4-1	4/4	N/A	N/A
E	N/A	N/A	N/A	SBFO10-1	4/5	N/A	N/A	GRN	SLT	UNUSED	UNUSED	UNUSED	E	N/A	N/A	N/A	SBFO4-1	4/5	N/A	N/A
E	N/A	N/A	N/A	SBFO10-1	4/6	N/A	N/A	GRN	WHT	UNUSED	UNUSED	UNUSED	E	N/A	N/A	N/A	SBFO4-1	4/6	N/A	N/A
B	FO5-002-FO10	BRN	BLU	SBFO10-1	4/7	N/A	N/A	BRN	BLU	(Spare) TV 5S, 6S (Video)	TVC-X5	TVC-CC	B	FO4-002-FO3	BRN	BLU	SBFO4-1	4/7	N/A	N/A
B	FO5-002-FO10	BRN	ORG	SBFO10-1	4/8	N/A	N/A	BRN	ORG	(Spare) TV 5N 6N (Video)	TVC-X5	TVC-CC	B	FO4-002-FO3	BRN	ORG	SBFO4-1	4/8	N/A	N/A
E	N/A	N/A	N/A	SBFO10-1	4/9	N/A	N/A	BRN	GRN	UNUSED	UNUSED	UNUSED	E	N/A	N/A	N/A	SBFO4-1	4/9	N/A	N/A
E	N/A	N/A	N/A	SBFO10-1	4/10	N/A	N/A	BRN	BRN	UNUSED	UNUSED	UNUSED	E	N/A	N/A	N/A	SBFO4-1	4/10	N/A	N/A
E	N/A	N/A	N/A	SBFO10-1	4/11	N/A	N/A	BRN	SLT	UNUSED	UNUSED	UNUSED	E	N/A	N/A	N/A	SBFO4-1	4/11	N/A	N/A
E	N/A	N/A	N/A	SBFO10-1	4/12	N/A	N/A	BRN	WHT	UNUSED	UNUSED	UNUSED	E	N/A	N/A	N/A	SBFO4-1	4/12	N/A	N/A

A - Spider fan-out kit to end device
B - Fusion splice to other cable
C - Pigtail to patch panel, patch cord to end device
D - Pigtail to patch panel (designated spare fiber)
E - Unused (dark) fiber

Patch Box #: PBFO4-1

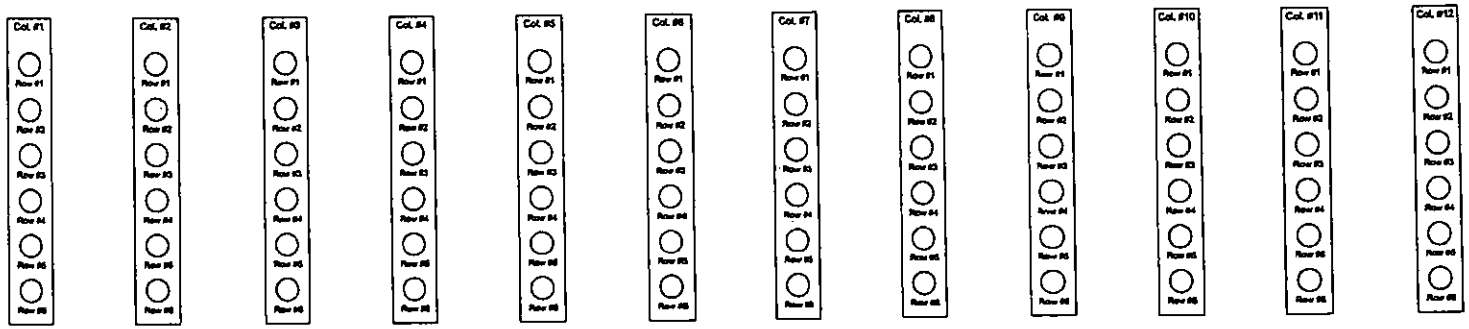

Row		Column #1	Column #2	Column #3	Column #4	Column #5	Column #6	Column #7	Column #8	Column #9	Column #10	Column #11	Column #12
1	Front	FO4-101-OPCOM6	FO4-101-OPCOM6										
	Func.	OPCOM TX PRI (6-9)	OPCOM RX PRI (9-6)										
	Back	FO9-001-FO4	FO4-002-FO3										
2	Front	SPARE	SPARE										
	Func.	OPCOM TX PRI (SPARE)	OPCOM RX PRI (SPARE)										
	Back	FO9-001-FO4	FO4-002-FO3										
3	Front	SPARE	FO4-105-TVCX1										
	Func.	TVCX1 VIDEO 1S, 2S	TVCX1 VIDEO 1S, 2S										
	Back	FO4-002-FO3	FO4-002-FO3										
4	Front	SPARE	FO4-106-TVCX1										
	Func.	TVCX1 VIDEO 1N, 2N	TVCX1 VIDEO 1N, 2N										
	Back	FO4-002-FO3	FO4-002-FO3										
5	Front	FO4-102-OPCOM6	FO3-103-OPCOM6										
	Func.	OPCOM RX PRI (7-6)	OPCOM TX SEC (6-7)										
	Back	FO4-001-FO10	FO10-002-FO4										
6	Front	SPARE	SPARE										
	Func.	OPCOM RX PRI (SPARE)	OPCOM TX SEC (SPARE)										
	Back	FO4-001-FO10	FO10-002-FO4										

Patch Box #: PBFO10-1

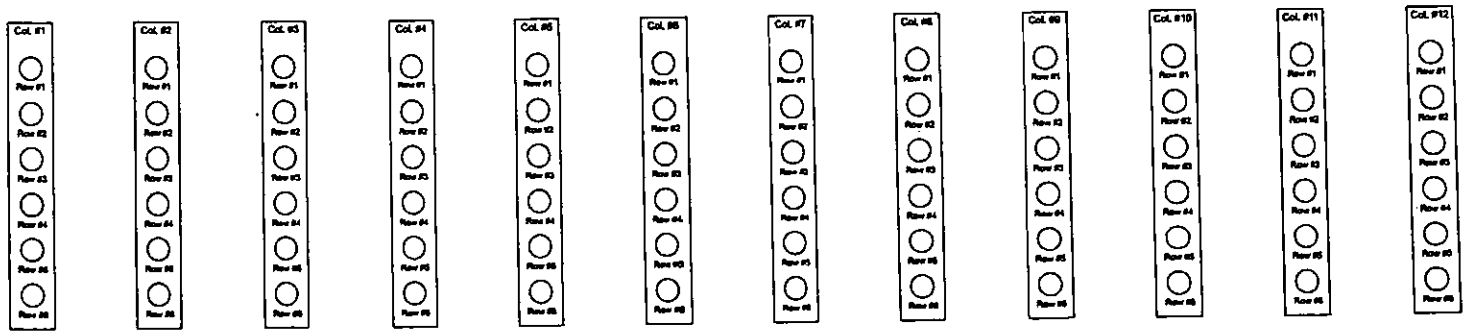

Row		Column #1	Column #2	Column #3	Column #4	Column #5	Column #6	Column #7	Column #8	Column #9	Column #10	Column #11	Column #12
1	Front	FO10-101-OPCOM2	FO10-101-OPCOM2										
	Func.	OPCOM RX PRI (1-2)	OPCOM TX PRI (2-3)										
	Back	FO4-001-FO10	FO10-001-FO5										
2	Front	SPARE	SPARE										
	Func.	OPCOM RX PRI (SPARE)	OPCOM TX PRI (SPARE)										
	Back	FO4-001-FO10	FO10-001-FO5										
3	Front	FO10-102-TVCX3	FO10-103-TVCX3										
	Func.	TVCX3, 3S, 4S VIDEO	TVCX3, 3W 4W VIDEO										
	Back	FO4-001-FO10	FO4-001-FO10										
4	Front	FO5-002-FO10	FO10-105-OPCOM2										
	Func.	OPCOM TX SEC (2-1)	OPCOM RX SEC (3-2)										
	Back	FO10-002-FO4	FO5-002-FO10										
5	Front	SPARE	SPARE										
	Func.	OPCOM TX SEC (SPARE)	OPCOM RX SEC (SPARE)										
	Back	FO10-002-FO4	FO5-002-FO10										
6	Front	SPARE	SPARE										
	Func.	TVCX3, 3N, 4N VIDEO	TVCX3 3S, 4S VIDEO										
	Back	FO4-001-FO10	FO4-001-FO10										

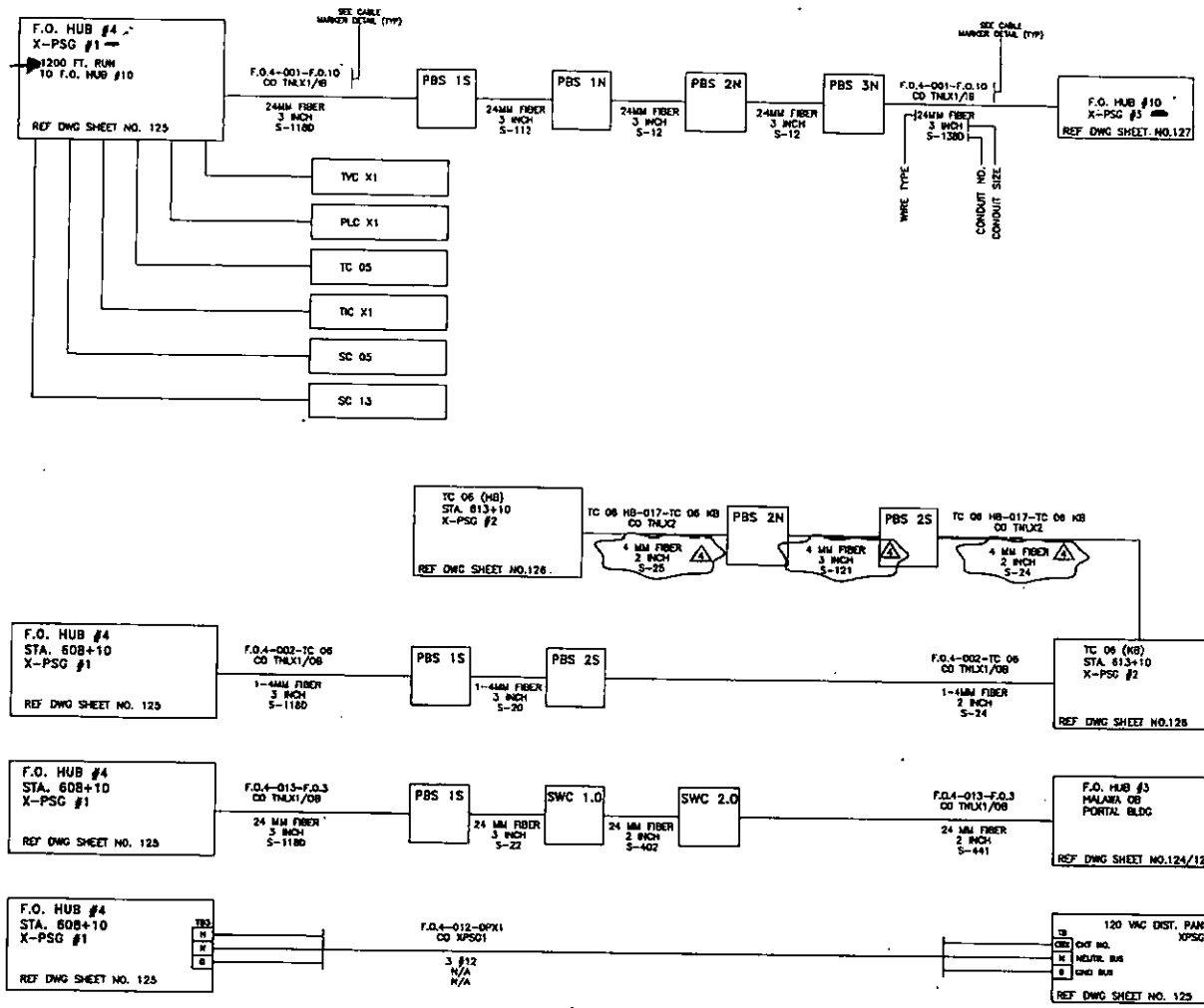

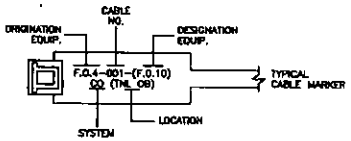

CABLE MARKER DETAIL

REV.	DATE	DESCRIPTION	BY	APP.
4	12-09-94	CHANGED WIRING FROM TC0808 TO TC0808	J.Z.	
3	09-23-94	CHANGED FIBER FROM 12MM TO 48MM FOR/LINE TO TC08	J.Z.	
2	07-08-94	REVISED PER PARCONTS.	J.Z.	
1	05-25-94	REVISED AND RELOCATED TC-06 (KB)	J.B.	
0	04-13-94	ISSUED FOR CONSTRUCTION	J.Z.	

SCALE: AS SHOWN	DESIGNED	D. GETTY	APPROVED	
	DRAWN	R. COOPER 8-3-93	FILE: 964-9010 / DATE: 12-09-94	
	CHECKED	D. GETTY	APPROVED	

TRANSDYN CONTROLS, INC.

INTERSTATE ROUTE H-3
F.A.I. PROJECT NO. I-H3-1 (65)

SUPERVISORY AND CONTROL SYSTEM WIRING DIAGRAM

JOB NO.	CLIENT JOB NO.	DRAWING NO.	REVISION
3125		3125-964-9010	4

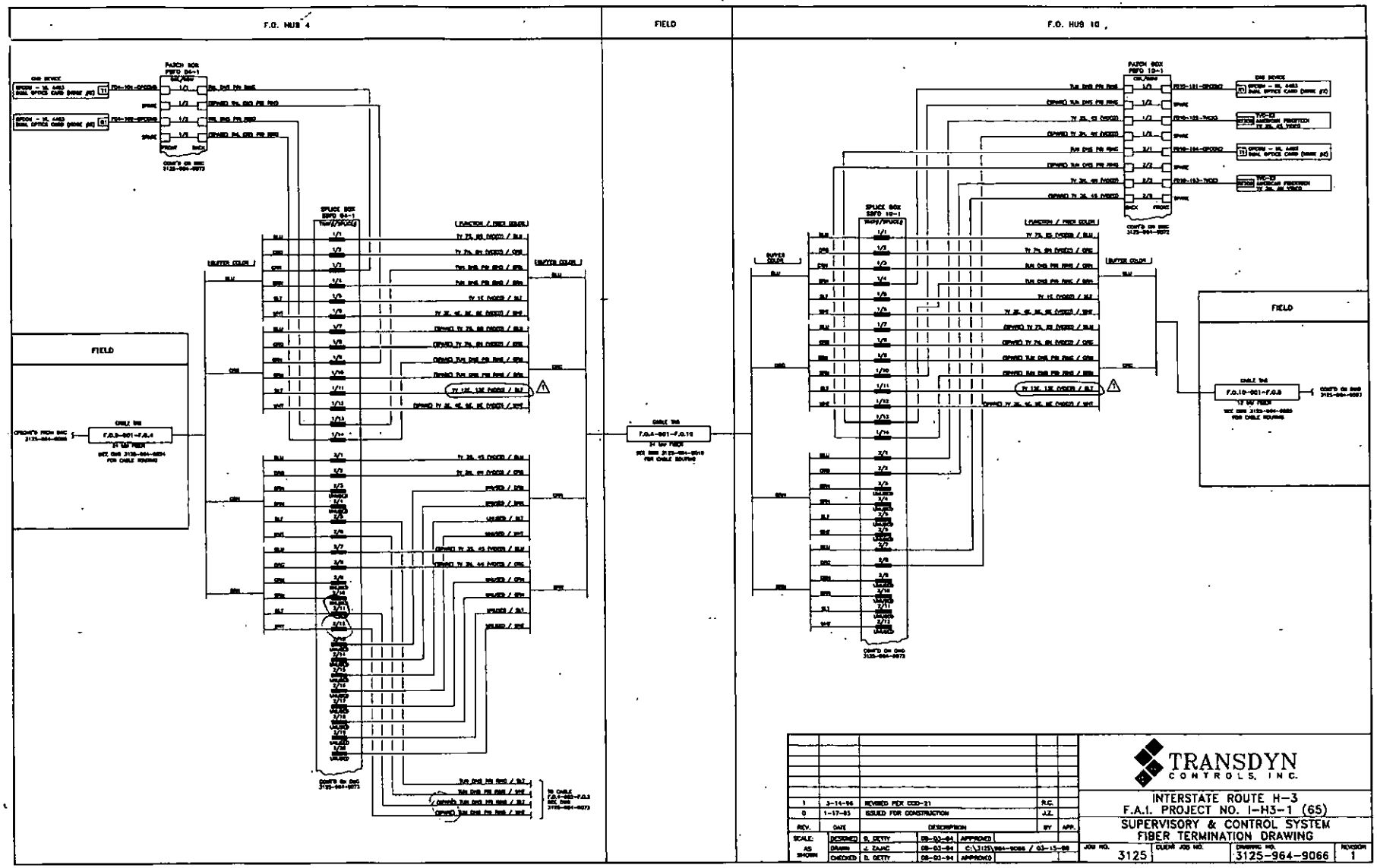
F.O. HUB 4
FIELD
F.O. HUB 10
PATCH BOX
SPLICE BOX
FIELD
CABLE TAG
BUFFER COLOR
FUNCTION / FIBER COLOR
CONT'D ON DWG 3125-964-9072
TRANSDYN CONTROLS, INC.
INTERSTATE ROUTE H-3
F.A.I. PROJECT NO. I-H3-1 (65)
SUPERVISORY & CONTROL SYSTEM
FIBER TERMINATION DRAWING
REV. DATE DESCRIPTION BY APP.
1 3-14-96 REVISED PER CCO-21 R.C.
0 1-17-95 ISSUED FOR CONSTRUCTION J.Z.
SCALE: AS SHOWN
DESIGNED B. DETTY 08-03-94 APPROVED
DRAWN J. ZANC 08-03-94 C:\3125\964-9066 / 03-15-96
CHECKED B. DETTY 08-03-94 APPROVED
JOB NO. 3125
CLIENT JOB NO.
DRAWING NO. 3125-964-9066
REVISION 1

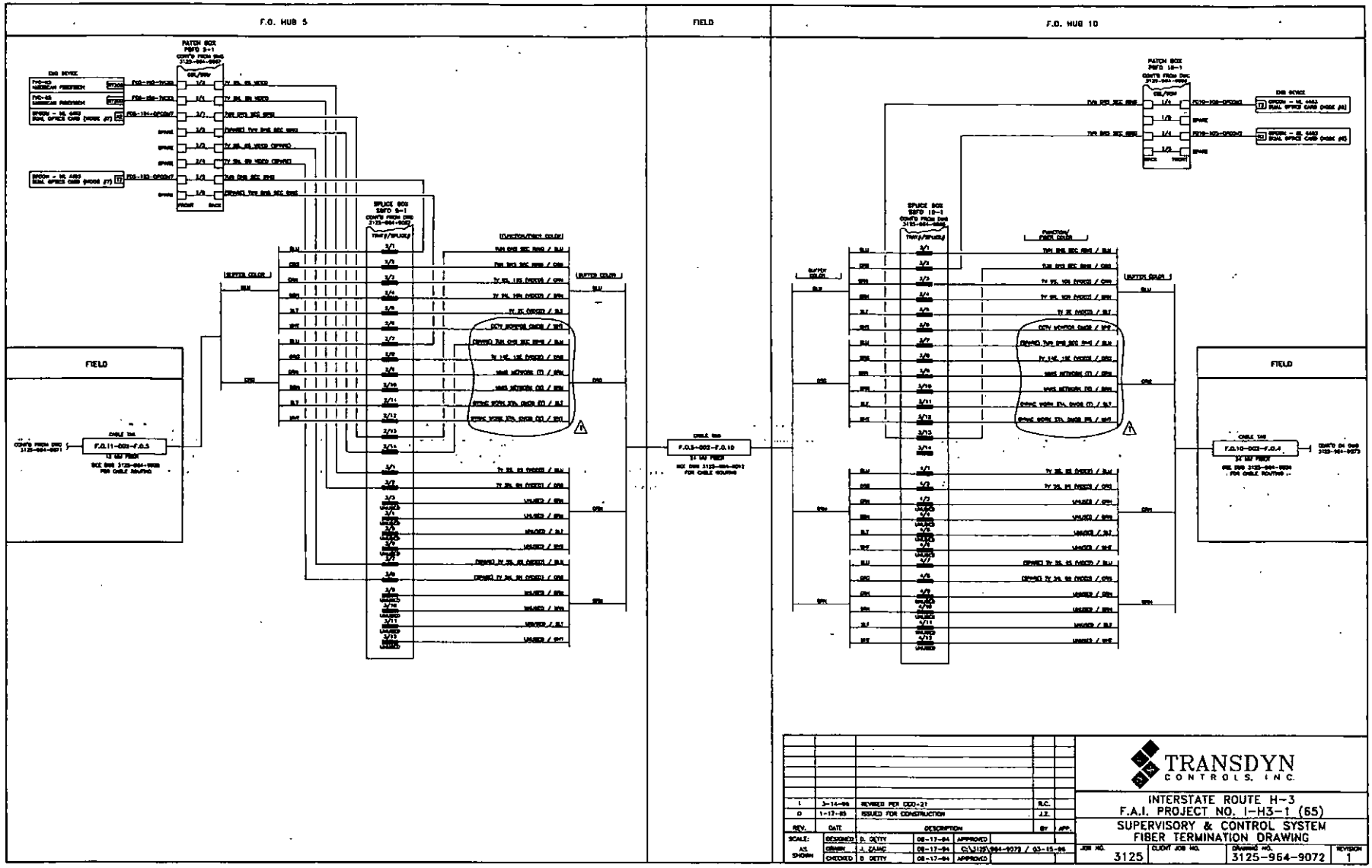

REV.	DATE	DESCRIPTION	BY	APP.
1	3-14-96	REVISED PER DCO-21	R.C.	
0	1-17-95	ISSUED FOR CONSTRUCTION	J.Z.	

SCALE:				
AS SHOWN	DESIGNED	R. DETTY	08-17-94	APPROVED
	DRAWN	J. ZAHC	08-17-94	C:\3125\964-9072 / 03-15-96
	CHECKED	D. DETTY	08-17-94	APPROVED

TRANSDYN CONTROLS, INC.

INTERSTATE ROUTE H-3
F.A.I. PROJECT NO. I-H3-1 (65)
SUPERVISORY & CONTROL SYSTEM
FIBER TERMINATION DRAWING

JOB NO.	CLIENT JOB NO.	DRAWING NO.	REVISION
3125		3125-964-9072	1

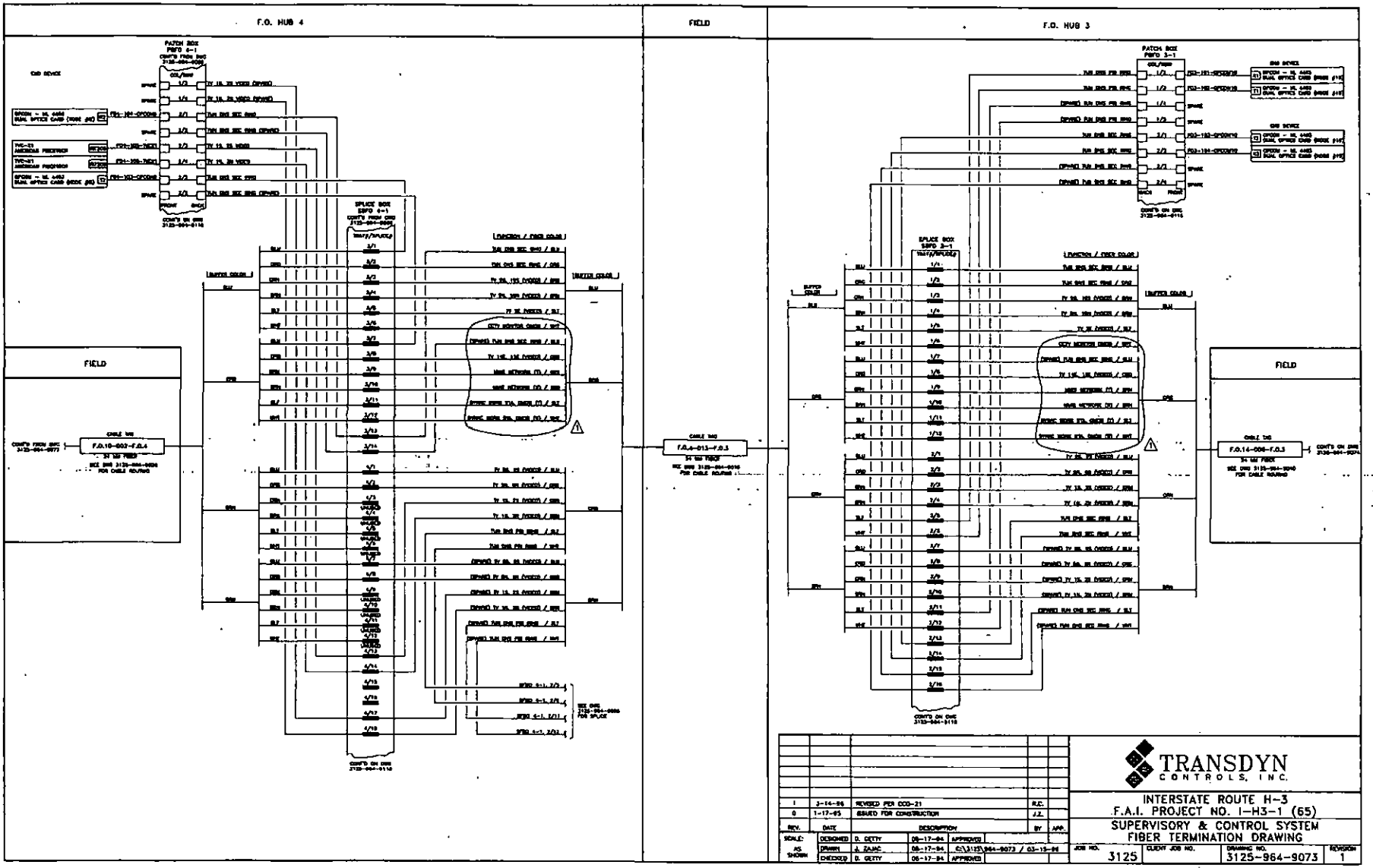

REV.	DATE	DESCRIPTION	BY	APP.
1	3-14-96	REVISED PER ECO-21	R.C.	
0	1-17-95	ISSUED FOR CONSTRUCTION	J.Z.	

SCALE: AS SHOWN	DESIGNED	D. GETTY	06-17-94 APPROVED
	DRAWN	J. ZAJAC	06-17-94 C:\3125\964-9073 / 03-15-96
	CHECKED	D. GETTY	06-17-94 APPROVED

TRANSDYN CONTROLS, INC.

INTERSTATE ROUTE H-3
F.A.I. PROJECT NO. I-H3-1 (65)

SUPERVISORY & CONTROL SYSTEM
FIBER TERMINATION DRAWING

JOB NO.	CUCHY JOB NO.	DRAWING NO.	REVISION
3125		3125-964-9073	1