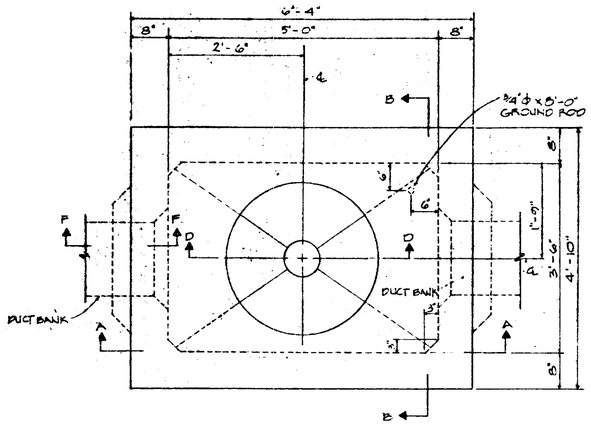

PLAN
SCALE: 3/4" = 1'-0"

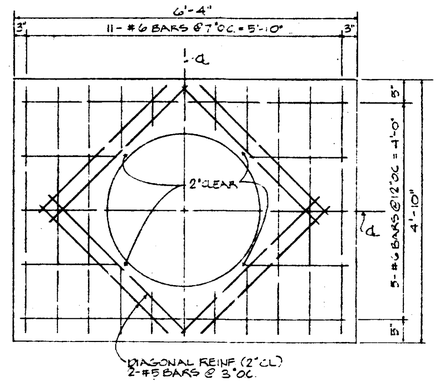

ROOF SLAB REINFORCING PLAN
SCALE: 3/4" = 1'-0"

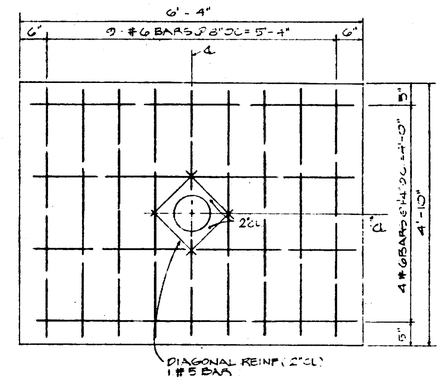

FLOOR SLAB REINFORCING PLAN
SCALE: 3/4" = 1'-0"

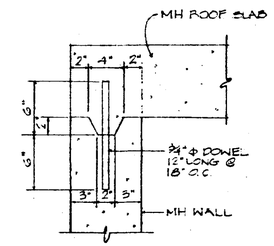

DETAIL "A"
TOP CONSTRUCTION JOINT
SCALE: 1 1/2" = 1'-0"

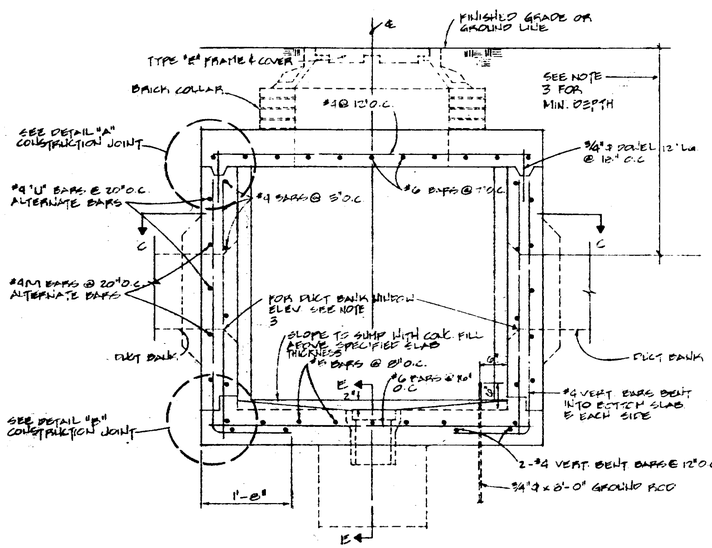

SECTION "A-A"
SCALE: 3/4" = 1'-0"

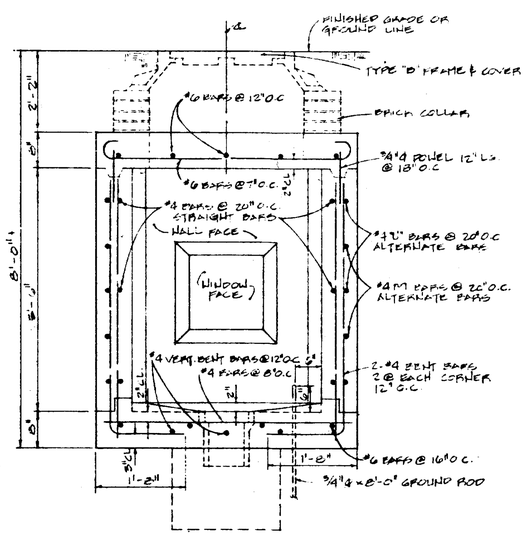

SECTION "B-B"
SCALE: 3/4" = 1'-0"

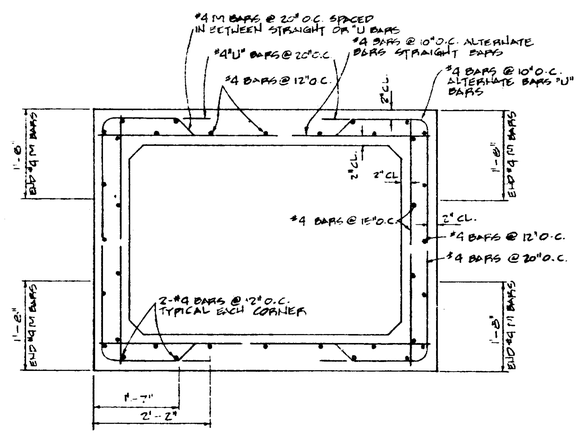

SECTION "C-C"
SCALE: 3/4" = 1'-0"

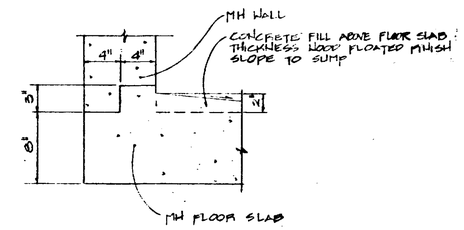

DETAIL "B"
BOTTOM CONSTRUCTION JOINT
SCALE: 1 1/2" = 1'-0"

GENERAL NOTES

1. DESIGN DATA
   f_c = 20,000 PSI
   f_s = 3,000 PSI ; f_c = 1350 PSI
   n = 10
   W = EQUIV. FLUID PRESSURE : 30#/FT²
2. ALL CONSTRUCTION JOINTS SHALL BE WATERPROOFED WITH THE APPLICATIONS OF THORO-SEAL OR EQUAL.
3. DUCT WINDOW TO SUIT FIELD CONDITIONS. COORDINATE WITH UTILITY COMPANIES IN FIELD.

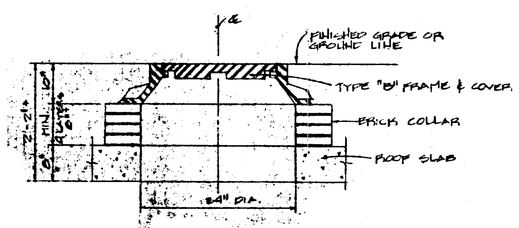

SECTION "D-D"
SCALE: 3/4" = 1'-0"

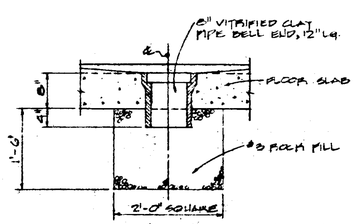

SECTION "E-E"
SCALE: 3/4" = 1'-0"

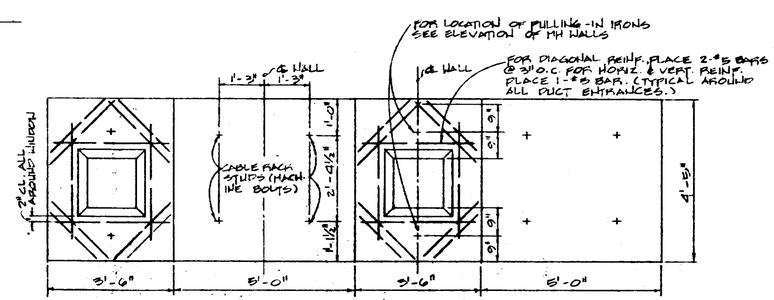

ELEVATION OF MANHOLE WALLS
SCALE: 1/2" = 1'-0"

FOR KALANIANAOLE HIGHWAY
PROJECT NO. F-072-1(34) ONLY

DR. ____ ENG. ____ CHK. ____ TEL. ____ INDEX ____ APP'D ____ HAWAIIAN TELEPHONE COMPANY HAWAII	ROADWAY PULLBOX MODIFICATION DATE ____ SHEET ____ OF ____