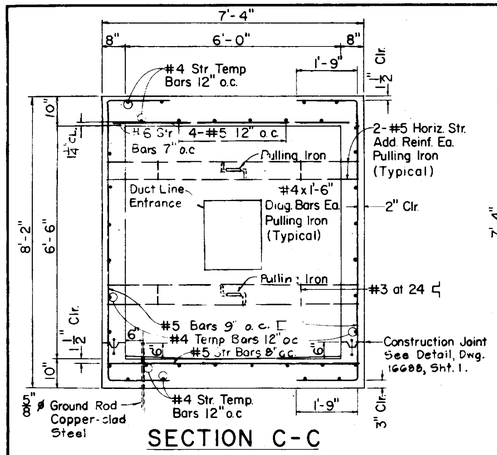

SECTION C-C

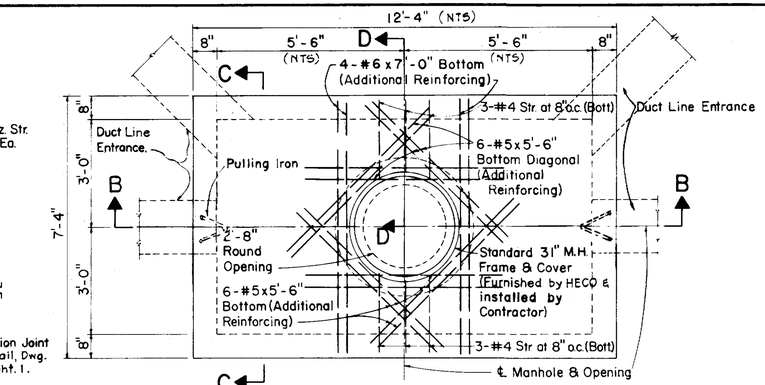

TOP PLAN

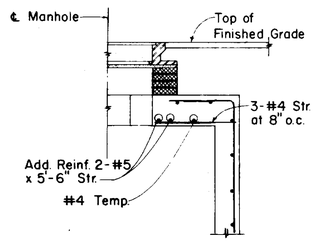

SECTION D-D

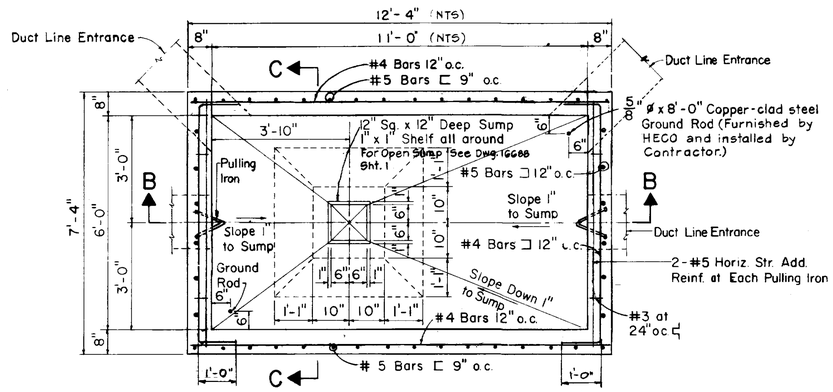

SECTIONAL PLAN A-A

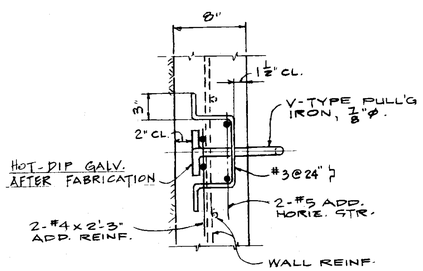

SECTIONAL ELEV.

PULLING IRON DET. (1/775)

1½" = 1'-0"

NOTE:

Use alternate manhole neck only when dimension "x" is greater than 1'-6". See Dwg. 16688 Sht. 2

Provide 4 5/8" ø x 0'-8" gal. bolts w/sq. nuts & washers (proj. 2½") when M.H. is installed in heavy traffic areas or as directed by the Engineer.

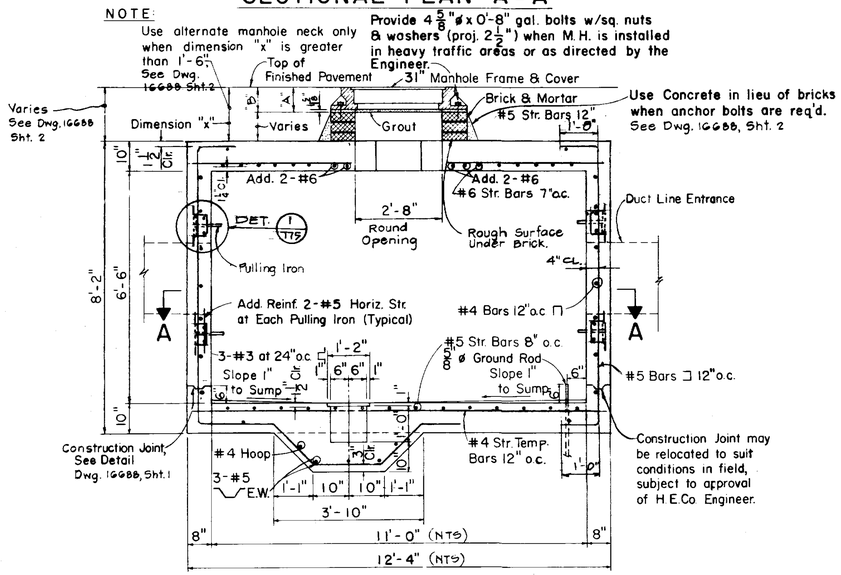

SECTION B-B

NOTES:

1. Refer to Drawing 16688 (Sheet 1 of 2 and 2 of 2) for General Notes and Miscellaneous Details.
2. For Number, Size and Exact Location of Duct Entrances and Pulling Irons, Refer to Project Drawings.
3. For Details of Duct Line Entrances, Pulling Iron and Construction Joint, See Dwg. 16688, Sheet 1 of 2.
4. For Dimension "A" & "B" See Dwg. 16688, Sheet 2 of 2.

REFERENCE DRAWINGS

011327 & 011328: Standard HECO 31" Manhole Frame & Cover.
16688 (2 Sheets) Misc. Details for Manholes & Handholes.

QUANTITY OF MATERIALS, (M.H. ONLY)

* Concrete	= 11.52 Cu. Yds.
Reinf. Steel	= 1444.61 lbs.
Misc. Steel (Pulling Irons, ea.)	= 10.90 lbs.

ADDITIONAL QUANTITY OF MATERIALS FOR ALTERNATE NECK (Dim. "X" = 2'-0")

Concrete	= 0.50 Cu. Yds.
Reinf. Steel	= 40.0 lbs.

* NOTE: Conc. for M.H. necks when used in lieu of bricks (for dim "X" < 1'-6") for anchor bolt installation is not included in above totals.

NO.	DATE	REVISIONS	BY	CHK'D	APP'D
2	8-27-81	CHANGED WALL REINF. ADDED DET. 1/775 (DELETED NOTE 5.)			
1	5-12-77	ADDED NOTE 5			
0	1-13-76	REDRAWN			

MANHOLE TYPE No. 1
(6'-0" x 11'-0")
UNDERGROUND STANDARDS

DESIGNED | DRAWN J.A. | DATE: 1-13-76 | SCALE: ½" = 1'-0"

CHECKED ELEC. MECH. STRUC.

APPROVAL

ENGINEERING DESIGN DEPARTMENT
HAWAIIAN ELECTRIC CO., INC.
HONOLULU, HAWAII

DRAWING NUMBER 18775 | REV. 2