FED. ROAD DIST. NO.	STATE	PROJ. NO.	FISCAL YEAR	SHEET NO.	TOTAL SHEETS
HAWAII	HAW.	LT-0-0579	1981	3	4

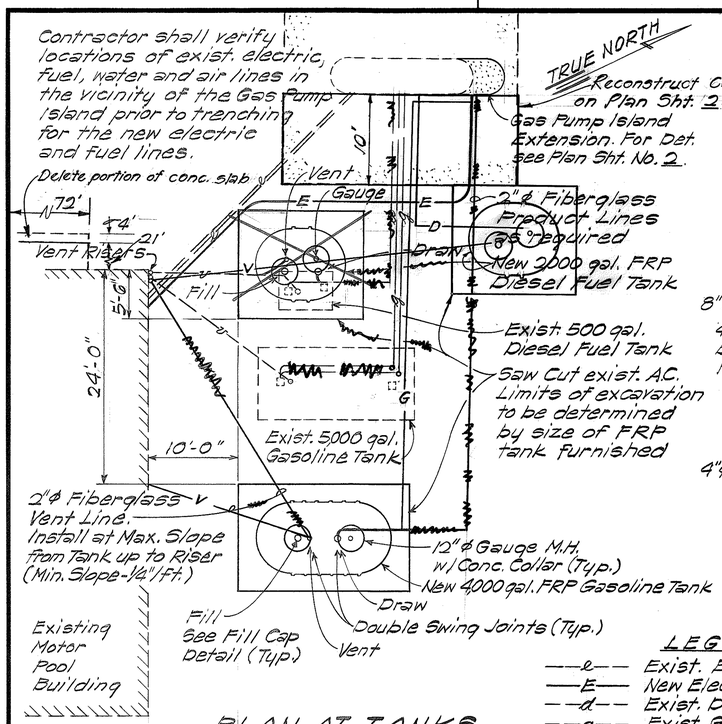

PLAN AT TANKS

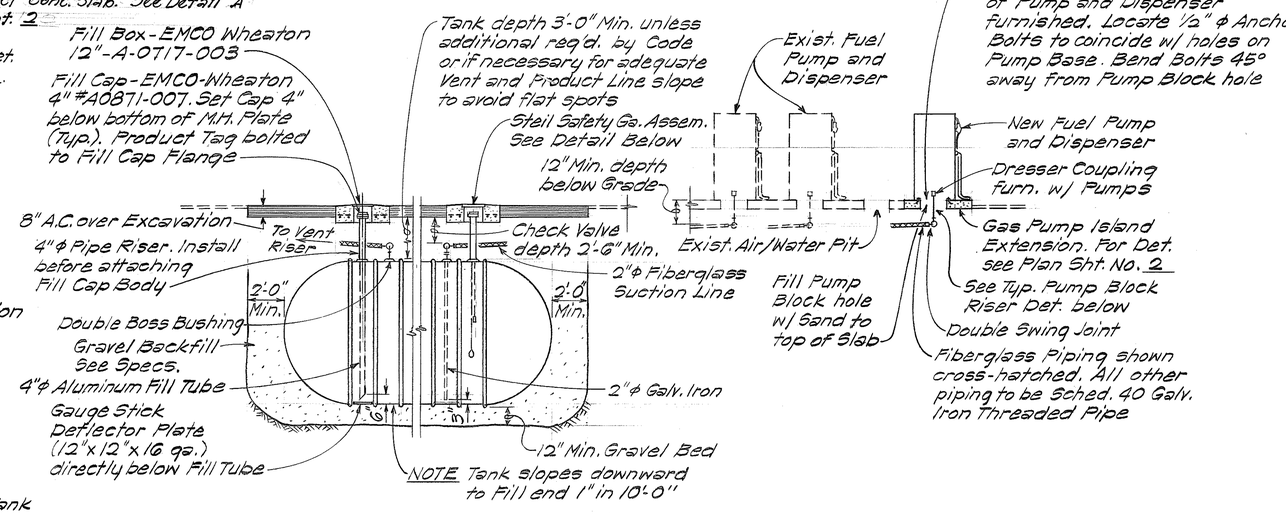

SECTION AT TANKS

LEGEND

- —e— Exist. Electric Line
- —E— New Electric Line in 1 1/2"ϕ Conduit
- —d— Exist. Diesel Line
- —g— Exist. Gasoline Line
- —G— New Gasoline Line
- —v— Exist. Vent Line
- —V— New Vent Line
- —D— New Diesel Line

NOTES

1. Plug all unused openings in FRP tanks with steel plugs.
2. Gauge shall be maximum distance from Fill opening.
3. Vent Risers shall be spaced minimum 6" o.c. and fastened securely to building with preformed clamps and spacers similar to existing. Riser opening shall be minimum 12'-0" above existing yard surface.

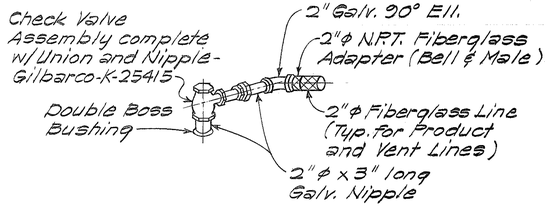

TYPICAL CONNECTION DETAIL

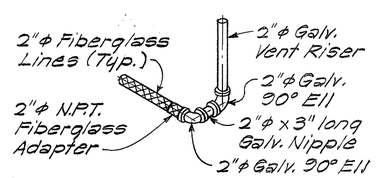

VENT RISER SWING JOINT DETAIL

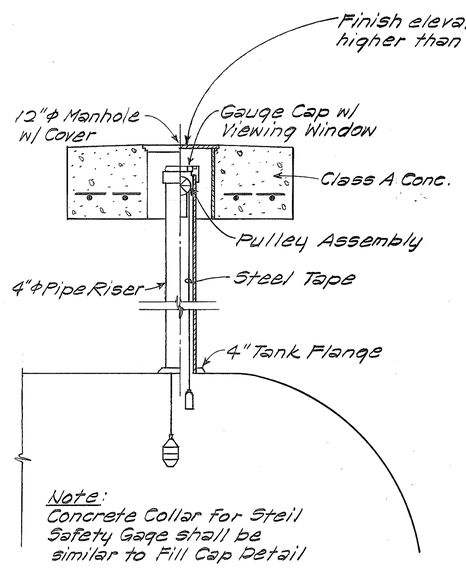

SECTION AT STEEL SAFETY GAGE ASSEMBLY

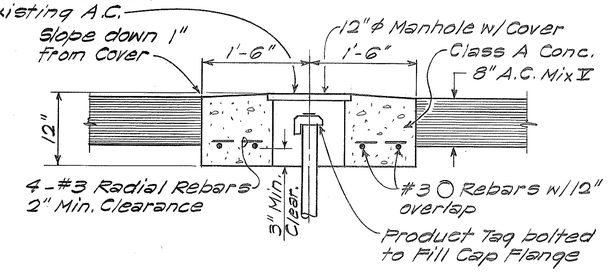

FILL CAP DETAIL

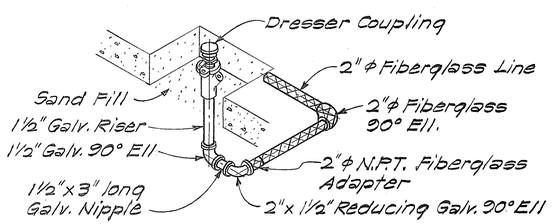

TYPICAL RISER DETAIL AT PUMP BLOCK

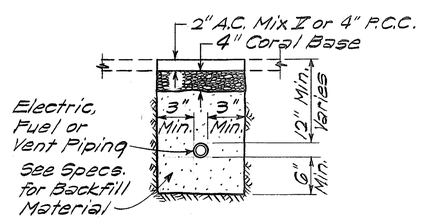

TYPICAL TRENCH BACKFILL DETAIL

ORIGINAL PLAN	SURVEY PLOTTED BY	DATE
	TRACED BY	"
	DESIGNED BY	"
NOTE BOOK	QUANTITIES BY	"
No.	CHECKED BY	"

STATE OF HAWAII
DEPARTMENT OF TRANSPORTATION
LAND TRANSPORTATION FACILITIES DIVISION

INSTALLATION DETAILS

OAHU DISTRICT
BASEYARD IMPROVEMENTS
Proj. No. LT-0-05-79

Not to Scale — Date: Nov., 1980

SHEET No. 1 OF 1 SHEETS